WELDING PROCEDURE SPECIFICATION

PQR ELDERLEE#3

Material Specification	A500 GR B to A572 GR 50
Welding Process	FCAW-G
Manual or Machine	SEMAUTOMATIC
Position of Welding	FLAT/HORIZONTAL
Filler Metal Specification	A5.29
Filler Metal Classification	E81T1-Ni1C-JH4
Flux	N/A
Shielding Gas	CO 2 Dew Point -40DEG F Flow Rate 50CFH
Single or Multiple Pass	SINGLE
Single or Multiple Arc	SINGLE
Welding Current	DC
Polarity	REVERSE ELECTRODE POSITIVE
Welding Progression	STRINGER
Root Treatment	PER D1.5
Preheat and Interpass Temperature	PER D1.5
Postheat Temperature	NONE
Heat Input	Min _____ Max _____

WELDING PROCEDURE

Pass no.	Electrode size	Welding Current Amperes	Welding Current Volts	Travel speed	Joint detail
1	1/16	310	25	11	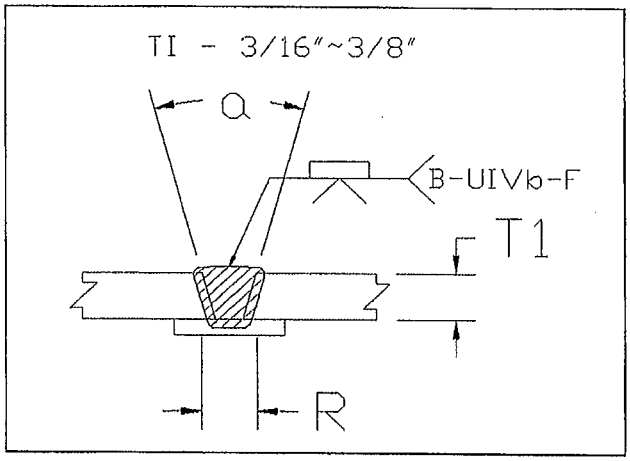
Variable	LIMITS	341 TO 269	27 TO 23	12 TO 10	

This procedure may vary due to fabrication sequence, fit-up, pass size, etc., within the limitation of variables given in Section 5.

Procedure No. 3007

Revision No. _____

Contractor Elderlee, Inc.

Authorized By RANDY SCOTT

Date 7/28/2014

WELDING PROCEDURE SPECIFICATION

PQR ELDERLEE #3

Material Specification	A709 TO A500 GR B
Welding Process	FCAW-G
Manual or Machine	SEMAUTOMATIC
Position of Welding	FLAT/HORIZONTAL
Filler Metal Specification	A5.29
Filler Metal Classification	E81T1-Ni1C-JH4
Flux	N/A
Shielding Gas	CO 2 Dew Point -40DEG F Flow Rate 50CFH
Single or Multiple Pass	SINGLE
Single or Multiple Arc	SINGLE
Welding Current	DC
Polarity	REVERSE ELECTRODE POSITIVE
Welding Progression	STRINGER
Root Treatment	D1.5
Preheat and Interpass Temperature	D1.5
Postheat Temperature	NONE
Heat Input	Min _____ Max _____

WELDING PROCEDURE

Pass no.	Electrode size	Welding Current Amperes	Welding Current Volts	Travel speed	Joint detail
1	1/16	310	25	11	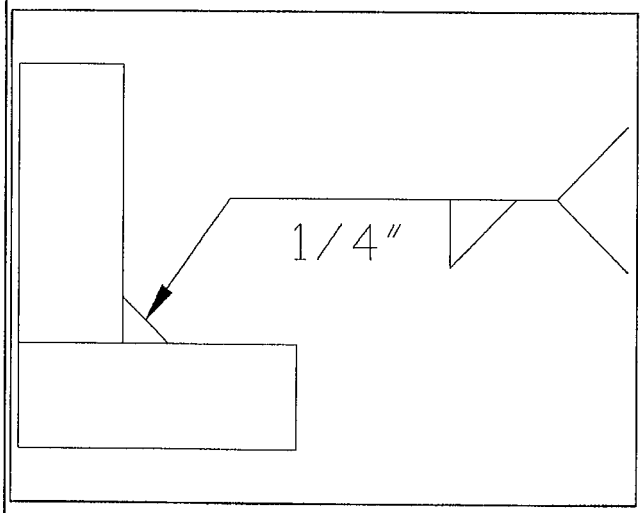
Variable	LIMITS	341 TO 269	27 TO 23	12 TO 10	

This procedure may vary due to fabrication sequence, fit-up, pass size, etc., within the limitation of variables given in Section 5.

Procedure No. 3009

Revision No. _____

Contractor Elderlee, Inc.

Authorized By RANDY SCOTT

Date 3/20/2014

WELDING PROCEDURE SPECIFICATION

PQR ELDERLEE #3

Material Specification	A500 TO A572 GR 50
Welding Process	FCAW-G
Manual or Machine	SEMAUTOMATIC
Position of Welding	FLAT/HORIZONTAL
Filler Metal Specification	A5.29
Filler Metal Classification	E81T1-Ni1C-JH4
Flux	N/A
Shielding Gas	CO 2 Dew Point -40DEG F Flow Rate 50CFH
Single or Multiple Pass	SINGLE
Single or Multiple Arc	SINGLE
Welding Current	DC
Polarity	REVERSE
Welding Progression	STRINGER
Root Treatment	PER D1.5
Preheat and Interpass Temperature	PER D1.5
Postheat Temperature	NONE
Heat Input	Min _____ Max _____

WELDING PROCEDURE

Pass no.	Electrode size	Welding Current Amperes	Welding Current Volts	Travel speed	Joint detail
1	1/16	310	25	11	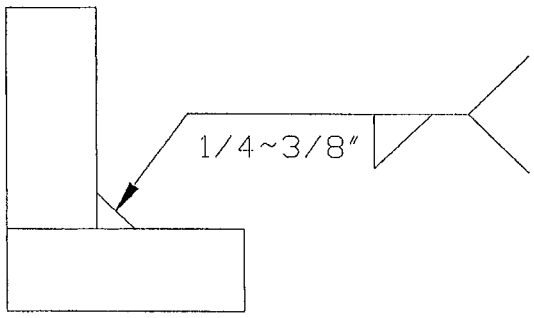
Variable	LIMITS	341 TO 269	27 TO 23	12 TO 10	

This procedure may vary due to fabrication sequence, fit-up, pass size, etc., within the limitation of variables given in Section 5.

Procedure No. 3016

Revision No. _____

Contractor Elderlee, Inc.

Authorized By RANDY SCOTT

Date 8/4/2014

WELDING PROCEDURE SPECIFICATION

Material Specification	A572 GR 50
Welding Process	GMAW
Manual or Machine	SEMIAUTOMATIC/ROBOTIC
Position of Welding	FLAT/HORIZONTAL
Filler Metal Specification	A5.18
Filler Metal Classification	L-56 LINCOLN
Flux	N/A
Shielding Gas	90% ARGON /10% CO2 Dew Point -40DEG F Flow Rate 45CFH
Single or Multiple Pass	SINGLE
Single or Multiple Arc	SINGLE
Welding Current	DC
Polarity	REVERSE
Welding Progression	STRINGER
Root Treatment	PER D1.5
Preheat and Interpass Temperature	PER D1.5
Postheat Temperature	NONE
Heat Input	Min _____ Max _____

WELDING PROCEDURE

Pass no.	Electrode size	Welding Current Amperes	Welding Current Volts	Travel speed	Joint detail
	.045	190	22	19	
Variable	LIMITS	171 TO 209	20 TO 24	17 TO 21	

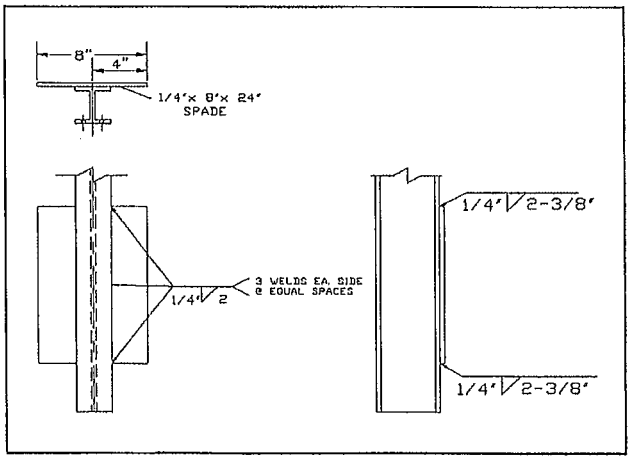

This procedure may vary due to fabrication sequence, fit-up, pass size, etc., within the limitation of variables given in Section 5.

Procedure No. 3022

Revision No. _____

Contractor Elderlee, Inc.

Authorized By RANDY SCOTT

Date 3/20/2014