Release Number:					BAR LIST											
Bar Mark	Qty	Size	Total Length	Type	'A'	'B'	'C'	'D'	'E'	'F'	'G'	'H'	'J'	'K'	'O'	'R'
5CZ01	44	#5	5'-10"	17		1'-5"	3'-0"	1'-5"								
6CZ01	104	#6	3'-10"	17		1'-10"	2'-0"									

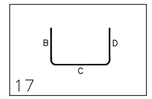

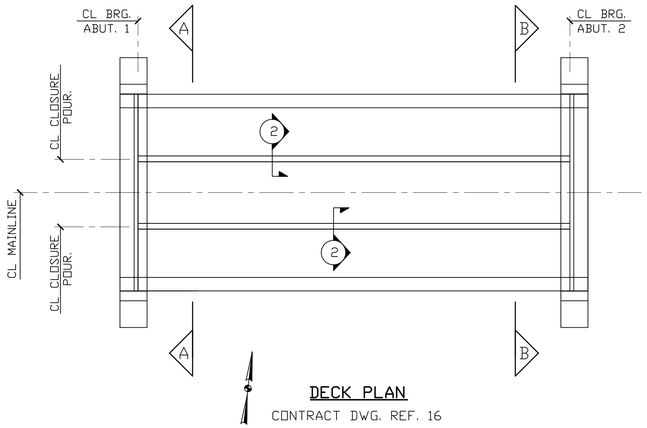

DECK PLAN
CONTRACT DWG. REF. 16

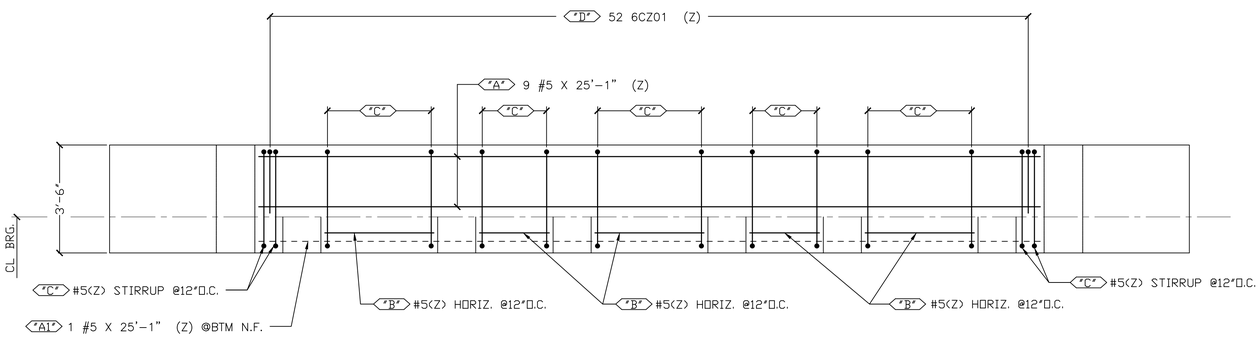

ABUTMENT #1 & #2 PLAN
CONTRACT DWG. REF. 19 & 21

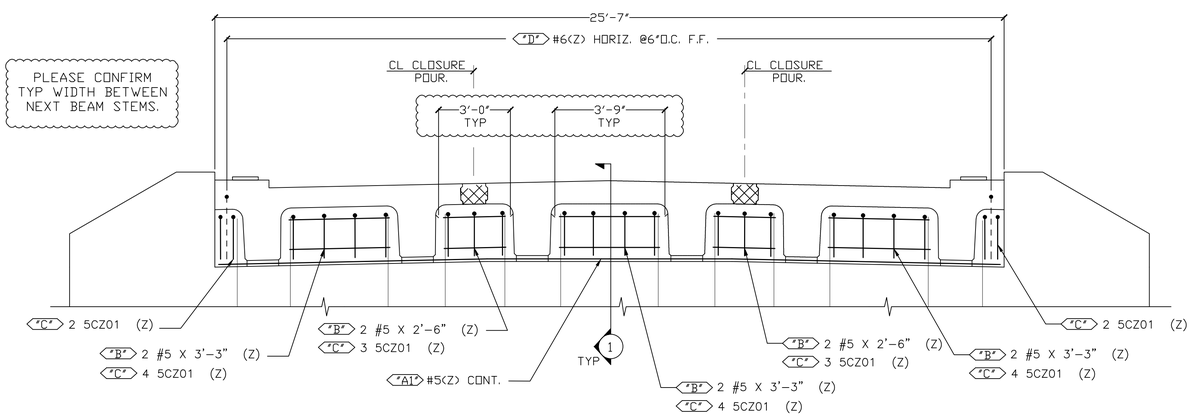

ABUTMENT #1 - ELEVATION A-A
ABUTMENT #2 - ELEVATION B-B
(PILE CAVITIES NOT SHOWN FOR CLARITY)
CONTRACT DWG. REF. 19 & 21

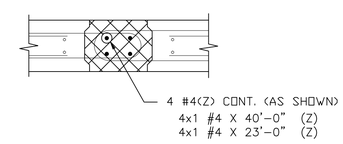

SECTION 2
(2 THUS)
CONTRACT DWG. REF. 17

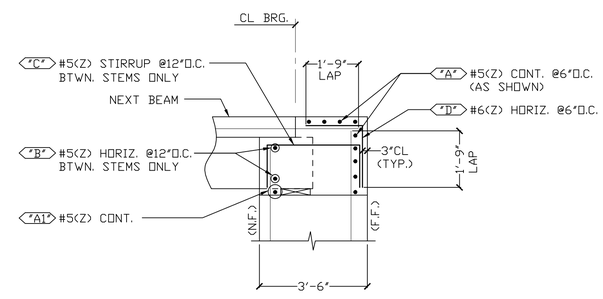

SECTION 1
CONTRACT DWG. REF. 19 & 21

LEGEND:
CONT.-CONTINUOUS
TRANS.-TRANSVERSE
DWLS.-DOWELS
VERTS.-VERTICAL
HORIZ.-HORIZONTAL
T&B -TOP & BOTTOM
I.F.-INNER FACE
O.F.-OUTER FACE
E.E.-EACH END
E.F.-EACH FACE
N.F.-NEAR FACE
F.F.-FAR FACE
E.W.-EACH WAY
O.C.-ON CENTER
L.W.-LONG WAY
S.W.-SHORT WAY

FOR APPROVAL

LAP CHART	
#4,#5,#6	2'-7" (U.N.)

ALL REINF. BARS
LEVEL II - DUAL COATED

ELEVATIONS & DIMENSIONS SHOWN ON THIS DWG. ARE FOR REINF. DETAILING PURPOSES ONLY AND ARE NOT INTENDED FOR DIMENSIONAL CONSTRUCTION.

DUAL COATED REINF. BARS ASTM A615 GRADE 60, MARKED (Z)

VERIFICATION OF UNCLEAR INFORMATION MAY BE REQUESTED ON THIS DRAWING. SHOULD VERIFICATION BE LEFT UN-ADDRESSED IT WILL REMAIN AS SHOWN AND ASSUME TO BE CORRECT.

	DATE	REV.#	SENT FOR
6			
5			
4			
3			
2			
1	1/29/15	–	FOR APPROVAL

DIMENSION
DIMENSION FABRICATORS INC.
2000 7TH STREET
SCOTIA, N.Y. 12302
PH: (518) 374-1936
FAX (518) 374-4830
www.dimensionfabricators.com

STRUCTURE	VTAOT CAMBRIDGE BRO 1448(39)
LOCATION	CAMBRIDGE, VERMONT
ARCHITECT	
ENGINEER	
CUSTOMER	BLOW & COTE, INC.
DRAWN BY: KRIS J	DATE: 1/23/15 — DFI #: 9127
DRAWING COVERS: CLOSURE POURS	DRAWING #: C