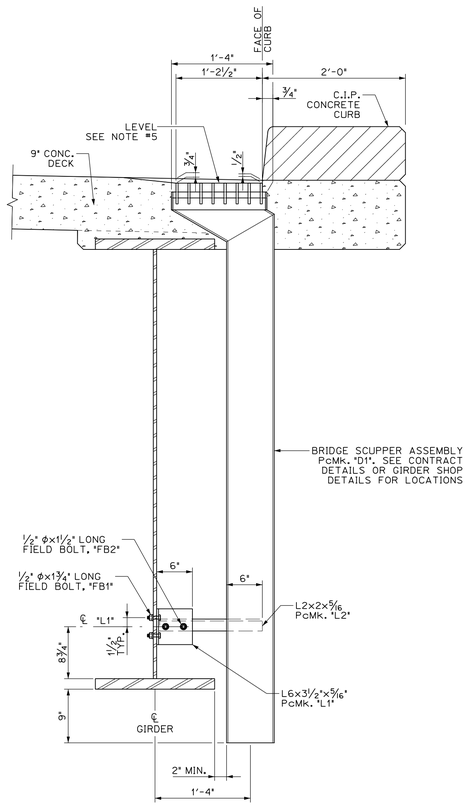

TYPICAL BRIDGE DRAIN SECTION
SCALE: 1" = 1'-0"
GIRDER 5 SHOWN, GIRDER 1 OPPOSITE HAND

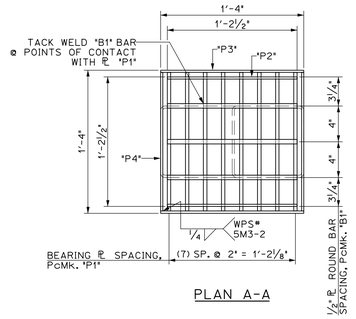

PLAN A-A

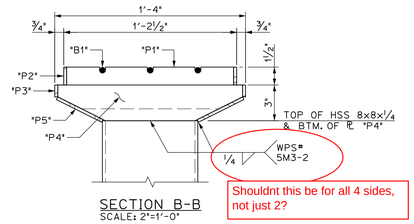

SECTION B-B
SCALE: 2"=1'-0"

Shouldnt this be for all 4 sides, not just 2?

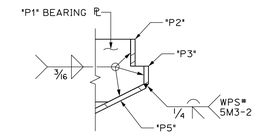

WELD DETAIL
SCALE: 3"=1'-0"

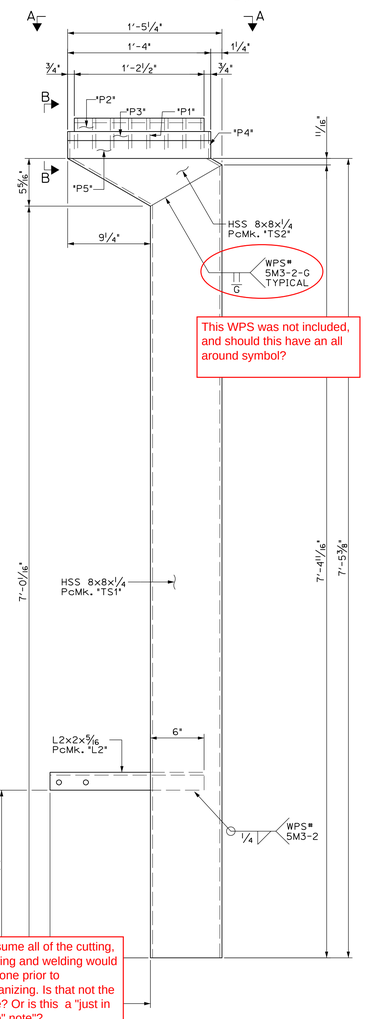

This WPS was not included, and should this have an all around symbol?

BRIDGE SCUPPER ELEVATION, Pc.Mk. "D1"
SCALE: 1½" = 1'-0"

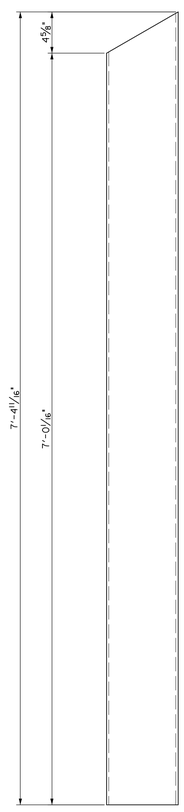

HSS 8x8x¼, Pc.Mk. "TS1"
SCALE: 1½" = 1'-0"

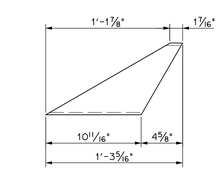

HSS 8x8x¼, Pc.Mk. "TS2"
SCALE: 1½" = 1'-0"

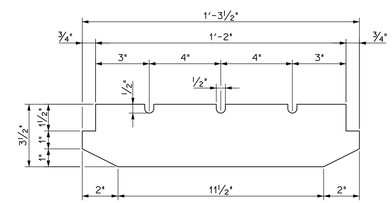

⅜" BEARING ℙ, PcMk. "P1"
SCALE: 3"=1'-0"

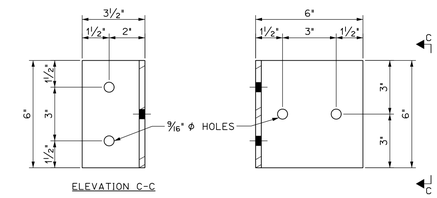

ELEVATION C-C

L6x3½x5/16, PcMk. "L1"
SCALE: 3"=1'-0"

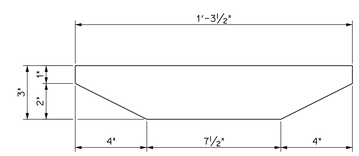

¼" BEARING ℙ, PcMk. "P4"
SCALE: 3"=1'-0"

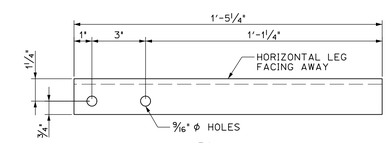

L2x2x5/16, PcMk. "L2"
SCALE: 3"=1'-0"

BILL OF MATERIALS

SHIP	SHIP MARK	NO. PCS.	PIECE MARK	DESCRIPTION	LENGTH	WEIGHT	FINISH	MATERIAL
10	D1			BRIDGE SCUPPER ASSEMBLY		305# EACH	GALVANIZE	
		10	TS1	HSS 8x8x¼	7'-4 11/16"	200# EACH		ASTM A500, Gr.B
		10	TS2	HSS 8x8x¼	1'-3 5/16"	25# EACH		ASTM A500, Gr.B
		30	B1	½"Φ ROUND BAR	1'-2½"	1# EACH		AASHTO M270, Gr.36
		80	P1	ℙ ⅜" x 3½"	1'-3½"	5.5# EACH		AASHTO M270, Gr.50
		20	••P2	ℙ ¼" x 1½"	1'-2½"	2# EACH		AASHTO M270, Gr.50
		20	••P3	ℙ ¼" x 1"	1'-4"	1.5# EACH		AASHTO M270, Gr.50
		20	P4	ℙ ¼" x 3"	1'-3½"	3# EACH		AASHTO M270, Gr.50
		20	••P5	ℙ ¼" x 4¼"	1'-4"	5# EACH		AASHTO M270, Gr.50
		10	L2	L2X2X5/16	1'-5¼"	6# EACH		AASHTO M270, Gr.36
10	L1			L6x3½x5/16	0'-6"	5# EACH		AASHTO M270, Gr.36

FIELD BOLTS

20	FB1	½" Φ BOLT W/ N&W (GALVANIZED)	1¾"	ASTM A325, TYPE 1
20	FB2	½" Φ BOLT W/ N&W (GALVANIZED)	1½"	ASTM A325, TYPE 1

NOTE:
PIECES MARKED WITH A DOUBLE ASTERISK (••) IN THIS BILL OF MATERIAL HAVE BEEN INCLUDED FOR QUANTITY PURPOSES ONLY.
NO INDIVIDUAL PIECE MARK DETAIL HAS BEEN INCLUDED. THE MATERIAL IS JUST TO BE CUT TO THE DIMENSIONS SHOWN.

REVIEWED	X
REVIEWED AS MODIFIED	
REVISE AND RESUBMIT	
NOT REVIEWED	

Stantec

Date: 4/25/2016

By: Nathan Tirk

This review by Stantec Consulting Services Inc. is for the sole purpose of ascertaining conformance with the general design concept. This review shall not mean that Stantec Consulting Services Inc approves the detail design inherent in the shop drawings, responsibility for which shall remain with the Contractor. Submitting same, and such review shall not relieve the Contractor of his responsibility for errors or omissions in the shop drawing or of his responsibility for meeting all requirements of the Contract Documents. The contractor is responsible for dimensions to be confirmed and correlated at the job site, for information that pertains solely to the fabrication processes or to techniques of construction and installation and for coordination of the work of all subtrades.

Prior to galvanizing, all corners and edges of steel plates, shapes, etc., shall be ground to a 1/16 inch radius.

GENERAL FABRICATION NOTES

1.) FOR SCUPPER LOCATIONS, SEE FRAMING PLAN ON SHEET BR111 OF THE CONTRACT DETAILS or THE FRAMING PLAN ON SHEET #1 OF THE GIRDER SHOP DETAILS.

2.) DOWNSPOUTS SHALL BE GALVANIZED IN ACCORDANCE WITH SUBSECTION 726.08

3.) ALL BOLTS AND RELATED HARDWARE SHALL BE ASTM A307 AND SHALL BE GALVANIZED IN ACCORDANCE WITH ASTM A153.

4.) IN AREAS WHERE THE GALVANIZING HAS BEEN REMOVED FROM THE DOWNSPOUT EITHER BY CUTTING, BURNING, WELDING, PLACING, OR ANY OTHER MEANS, IT SHALL BE REPAIRED IN ACCORDANCE WITH SUBSECTION 726.08.

5.) THE TOP OF THE GRATE HAVE BEEN DETAILED LEVEL, RESULTING IN 1/4" DIFFERENCE FROM THE CONTRACT DETAILS AT THE FACE OF THE CURB. SEE "TYPICAL DRAIN SECTION"

REVIEWER VERIFY AS ACCEPTABLE

I assume all of the cutting, burning and welding would be done prior to galvanizing. Is that not the case? Or is this a "just in case" note"?

Vermont Agency of Transportation
RECEIVED
Inventory 4th scupper and pipe support thread threadmill.pdf

CK'D BY R Foster OK'D BY D Bonneau

April 25, 2016

RESUBMIT yes Rejected

BY D Bonneau DATE D Bonneau

PROJECT No. IM 089-2(43)
ITEM No. 506.60

FINISH	GALVANIZED				
MATERIAL	AS NOTED				
HOLES	AS NOTED				
ELECTRODES	PER WELD PROCEDURE				
WELDS	PER WELD PROCEDURE				
SURFACE PREP					
		NO	DATE	DESCRIPTION	BY

REVISIONS

ARC ENTERPRISES, INC.

ADVANCED RESOURCES & CONST. ENTERPRISES, INCORPORATED
P.O. BOX 120 KINGFIELD, ME. 04947
PHONE: (207) 265-2646 – FAX: (207) 265-4054

DRAFTER JJH	BRIDGE 46A SCUPPERS		PROJECT NO. 14-148
DATE AUG. 2015	WATERBURY, VT. BRIDGES 46A I-89 EXIT RAMP B over STOWE ST. & THATCHER BROOK		
CHECKED GNM	CC: BECK & BELLUCCI		DWG. NO. 1
DATE AUG. 2015			

BILL OF MATERIALS

SHIP	SHIP MARK	NO. PCS.	PIECE MARK	DESCRIPTION	LENGTH	WEIGHT	FINISH	MATERIAL
2	WT1			WT4x24	0'-8"	16# EACH	GALVANIZE	AASHTO M270, Gr.50
2	L3			L3½x3½x⅜	2'-9¾"	25# EACH		AASHTO M270, Gr.36

FIELD BOLTS

2	FB3	⅞" ϕ BOLT (GALVANIZED) w/ (2) JAMB NUTS	2½"	ASTM A325, TYPE 1

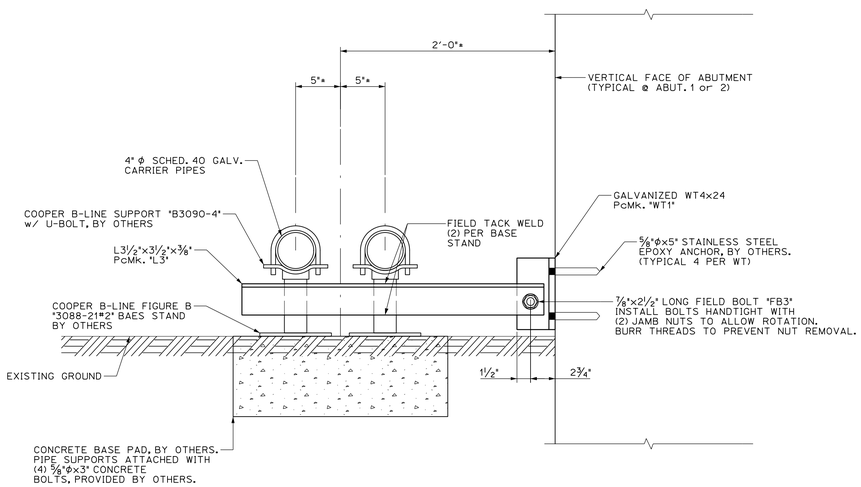

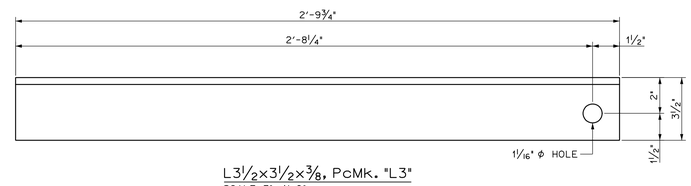

L3½x3½x⅜, PcMk. "L3"
SCALE: 3" =1'-0"

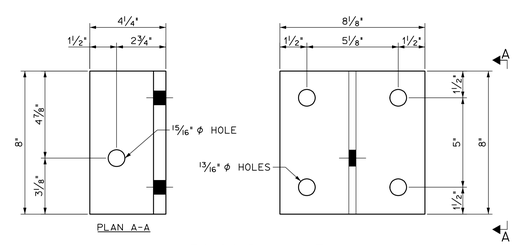

WT4x24, PcMk. "WT1"
SCALE: 3"=1'-0"

REVIEWED	X	Stantec
REVIEWED AS MODIFIED		
REVISE AND RESUBMIT		
NOT REVIEWED		

Date: 4/25/2016

By: Nathan Tirk

This review by Stantec Consulting Services Inc. is for the sole purpose of ascertaining conformance with the general design concept. This review shall not mean that Stantec Consulting Services Inc approves the detail design inherent in the shop drawings, responsibility for which shall remain with the Contractor. Submitting same, and such review shall not relieve the Contractor of his responsibility for errors or omissions in the shop drawing or of his responsibility for meeting all requirements of the Contract Documents. The contractor is responsible for dimensions to be confirmed and correlated at the job site, for information that pertains solely to the fabrication processes or to techniques of construction and installation and for coordination of the work of all subtrades.

PROJECT No. IM 089-2(43)
ITEM No. 506.60

FINISH	GALVANIZED				
MATERIAL	AS NOTED				
HOLES	AS NOTED				
ELECTRODES	PER WELD PROCEDURE				
WELDS	PER WELD PROCEDURE				
SURFACE PREP					
		NO	DATE	DESCRIPTION	BY

REVISIONS

ARC ENTERPRISES, INC.
ADVANCED RESOURCES & CONST. ENTERPRISES, INCORPORATED
P.O. BOX 120 KINGFIELD, ME. 04947
PHONE: (207) 265-2646 – FAX: (207) 265-4054

DRAFTER	JJH	BRIDGE 46A ~ PIPE SUPPORT BRACKETS	PROJECT NO. 14-148
DATE	AUG. 2015	WATERBURY, VT. BRIDGES 46A I-89 EXIT RAMP B over STOWE ST. & THATCHER BROOK	
CHECKED	GNM	SC: BECK & BELLUCCI	DWG. NO. 2
DATE	AUG. 2015		