FIELD NOTE:
EXPANSION JOINT ASSEMBLY WILL BE FURNISHED FULLY SHOP ASSEMBLED SEE SHEET 16.

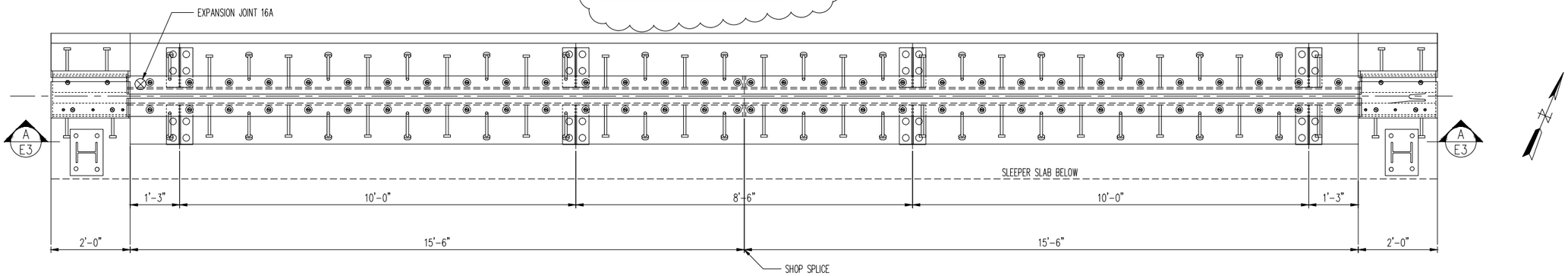

PLAN VIEW AT ABUTMENT 2 APPROACH SLAB EXPANSION DAM
LOOKING UP STATION

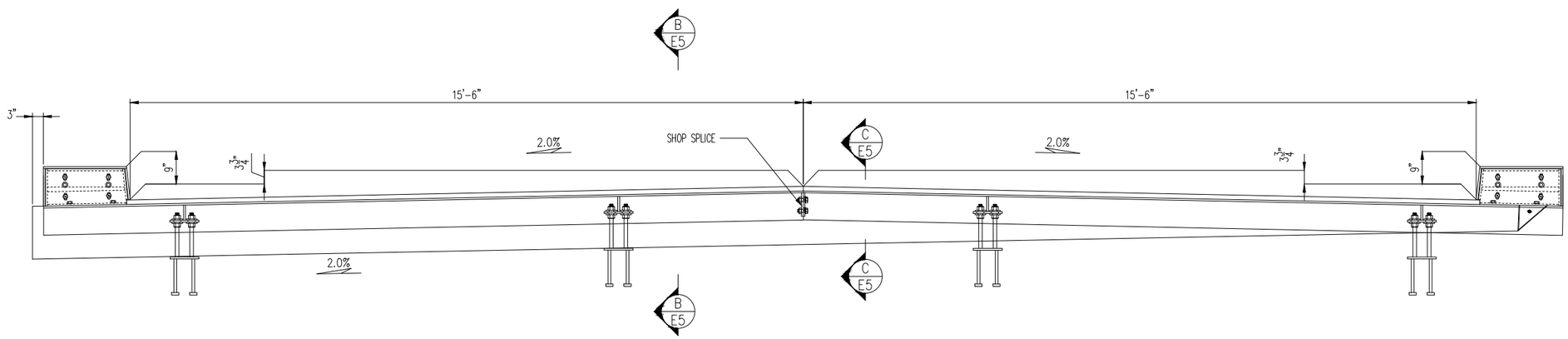

SECTION "A-A"
LOOKING UP STATION

SEE SHEET 16 FOR JOINT ASSEMBLY AND GENERAL NOTES
SEE SHEET 17 FOR BILL OF MATERIAL

REV.	DESCRIPTION	DATE	DET.	CKD.
1	REV. PER APPROVAL COMMENTS	8/25/15	JEB	JAC

D.S. BROWN
A GIBRALTAR INDUSTRIES COMPANY
THE D.S. BROWN COMPANY
300 E. CHERRY STREET
NORTH BALTIMORE, OHIO 45872
419.257.3561
FAX: 419.257.0332
WWW.DSBROWN.COM

LOCATION — TOWN OF WATERBURY
BRIDGE — I-89 EXIT RAMP B OVER STOWE ST
PROJECT — IM 089-2(43)
BRIDGE NO. — 46A
HIGHWAY NO. — INTERSTATE 89
DESIGNER — VERMONT AGENCY OF TRANSPORTATION
CUSTOMER — BECK AND BELLUCCI, INC

ITEM	QUANTITY
–	–
–	–
–	–
–	–
–	–
–	–
–	–
–	–
–	–

DESCRIPTION:
EXPANSION JOINT DETAILS
ERECTION DETAILS

SCALE:	DRAWN BY:	CHECKED BY:	DATE:	
N.T.S.	JAC	JEB	7/15/15	–
PROJECT NUMBER	PRODUCT CODE	RELEASE	SHEET	
44596	1043	1	E3	

FIELD NOTE:
EXPANSION JOINT ASSEMBLY WILL BE FURNISHED FULLY SHOP ASSEMBLED SEE SHEET 16.

A

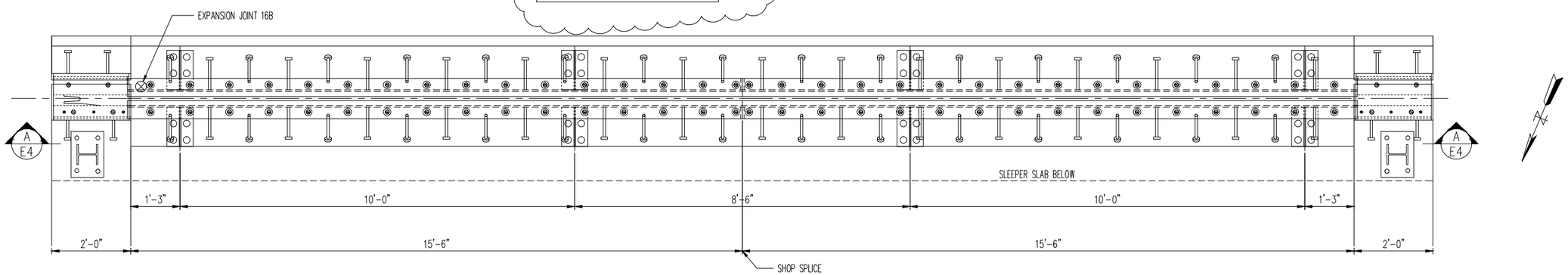

PLAN VIEW AT ABUTMENT 1 APPROACH SLAB EXPANSION DAM
LOOKING BACK STATION

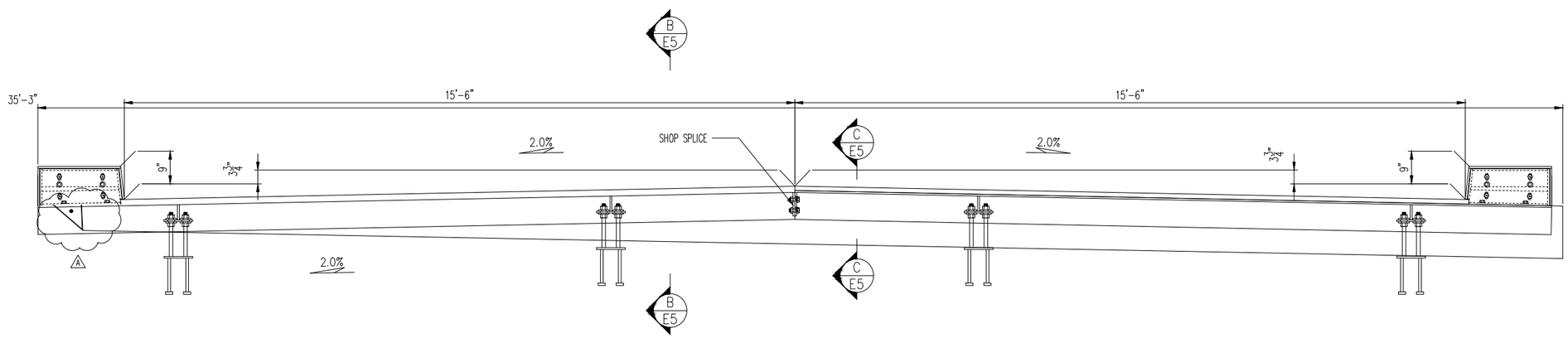

SECTION "A-A"
LOOKING BACK STATION

SEE SHEET 16 FOR JOINT ASSEMBLY AND GENERAL NOTES

SEE SHEET 17 FOR BILL OF MATERIAL

REV.	DESCRIPTION	DATE	DET.	CKD.
A	REV. PER APPROVAL COMMENTS	8/25/15	JEB	JAC

D.S. BROWN
A GIBRALTAR INDUSTRIES COMPANY

THE D.S. BROWN COMPANY
300 E. CHERRY STREET
NORTH BALTIMORE, OHIO 45872
419.257.3561
FAX: 419.257.0332
WWW.DSBROWN.COM

LOCATION — TOWN OF WATERBURY
BRIDGE — I-89 EXIT RAMP B OVER STOWE ST
PROJECT — IM 089-2(43)
BRIDGE NO. — 46A
HIGHWAY NO. — INTERSTATE 89
DESIGNER — VERMONT AGENCY OF TRANSPORTATION
CUSTOMER — BECK AND BELLUCCI, INC

ITEM	QUANTITY
–	–
–	–
–	–
–	–
–	–
–	–
–	–
–	–
–	–

DESCRIPTION:
EXPANSION JOINT DETAILS
ERECTION DETAILS

SCALE:	DRAWN BY:	CHECKED BY:	DATE:	
N.T.S.	JAC	JEB	7/15/15	–
PROJECT NUMBER	PRODUCT CODE	RELEASE	SHEET	
44596	1043	1	E4	

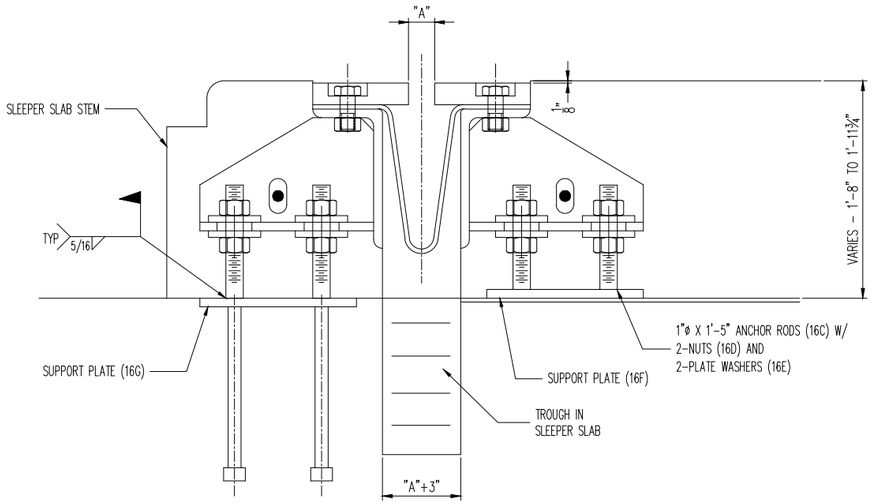

SECTION B-B

FIELD NOTE:
PROJECTING THREADS OF THE ¾"ø BOLTS SHALL BE GREASED IN THE FIELD BY THE CONTRACTOR PRIOR TO PLACING THE ADJACENT CONCRETE. THIS WILL FACILITATE BOLT REMOVAL IF REQUIRED IN THE FUTURE.

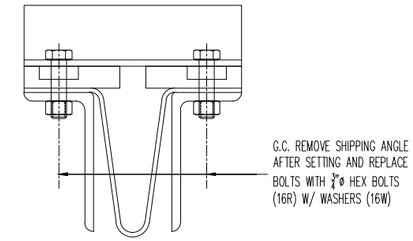

SHIPPING DEVICE

TEMPERATURE SETTING CHART	
TEMP °F	DIM "A"
0°	$2\frac{3}{8}$"
15°	$2\frac{1}{16}$"
30°	$1\frac{13}{16}$"
45°	$1\frac{1}{2}$"
60°	$1\frac{3}{16}$"
75°	$\frac{15}{16}$"
90°	$\frac{5}{8}$"

SEE SHEET 16 FOR JOINT ASSEMBLY AND GENERAL NOTES
SEE SHEET 17 FOR BILL OF MATERIAL

REV.	DESCRIPTION	DATE	DET.	CKD.

D.S. BROWN
A GIBRALTAR INDUSTRIES COMPANY
THE D.S. BROWN COMPANY
300 E. CHERRY STREET
NORTH BALTIMORE, OHIO 45872
419.257.3561
FAX: 419.257.0332
WWW.DSBROWN.COM

LOCATION — TOWN OF WATERBURY
BRIDGE — I-89 EXIT RAMP B OVER STOWE ST
PROJECT — IM 089-2(43)
BRIDGE NO. — 46A
HIGHWAY NO. — INTERSTATE 89
DESIGNER — VERMONT AGENCY OF TRANSPORTATION
CUSTOMER — BECK AND BELLUCCI, INC

ITEM	QUANTITY
–	–
–	–
–	–
–	–
–	–
–	–
–	–
–	–
–	–

DESCRIPTION:
EXPANSION JOINT DETAILS
ERECTION DETAILS

SCALE:	DRAWN BY:	CHECKED BY:	DATE:	
N.T.S.	JAC	JEB	7/15/15	–
PROJECT NUMBER	PRODUCT CODE	RELEASE	SHEET	
44596	1043	1	E5	

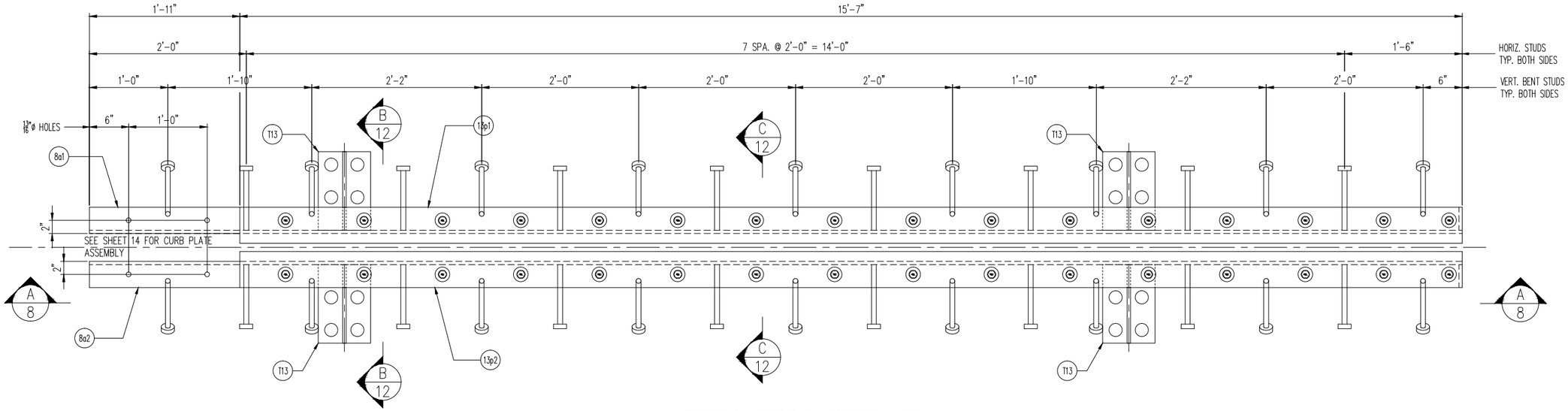

1 – EXPANSION JOINT SUB-ASSEMBLY – A3

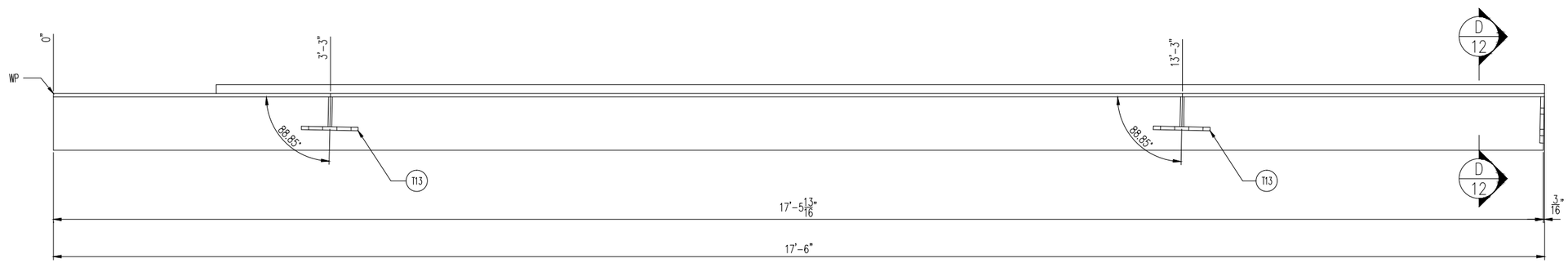

SECTION "A-A"

WELD STUDS NOT SHOWN FOR CLARITY

SEE SHEET 16 FOR JOINT ASSEMBLY AND GENERAL NOTES

SEE SHEET 17 FOR BILL OF MATERIAL

REV.	DESCRIPTION	DATE	DET.	CKD.

D.S. BROWN
A GIBRALTAR INDUSTRIES COMPANY

THE D.S. BROWN COMPANY
300 E. CHERRY STREET
NORTH BALTIMORE, OHIO 45872
419.257.3561
FAX: 419.257.0332
WWW.DSBROWN.COM

LOCATION — TOWN OF WATERBURY
BRIDGE — I-89 EXIT RAMP B OVER STOWE ST
PROJECT — IM 089-2(43)
BRIDGE NO. — 46A
HIGHWAY NO. — INTERSTATE 89
DESIGNER — VERMONT AGENCY OF TRANSPORTATION
CUSTOMER — BECK AND BELLUCCI, INC

ITEM	QUANTITY
–	–
–	–
–	–
–	–
–	–
–	–
–	–
–	–
–	–

DESCRIPTION:
EXPANSION JOINT DETAILS
FABRICATION DETAILS

SCALE:	DRAWN BY:	CHECKED BY:	DATE:	
N.T.S.	JAC	JEB	7/15/15	–

PROJECT NUMBER	PRODUCT CODE	RELEASE	SHEET
44596	1043	1	08

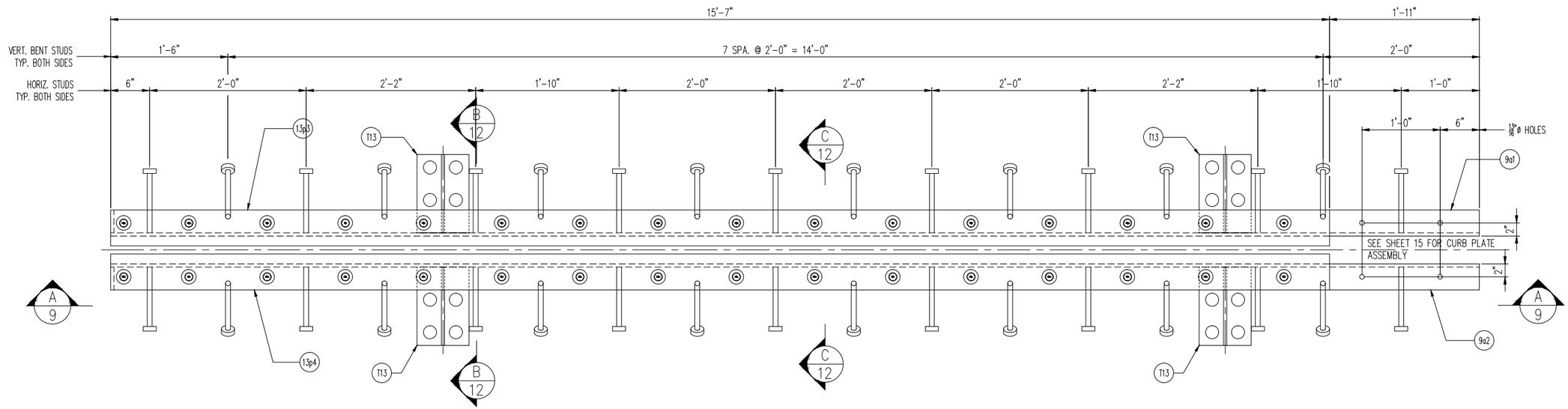

1 - EXPANSION JOINT SUB-ASSEMBLY - A4

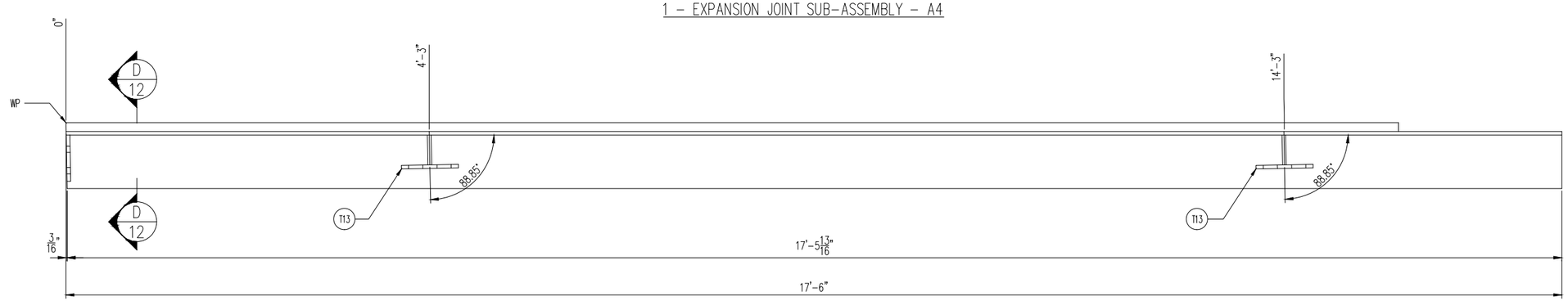

SECTION "A-A"

WELD STUDS NOT SHOWN FOR CLARITY

SEE SHEET 16 FOR JOINT ASSEMBLY AND GENERAL NOTES

SEE SHEET 17 FOR BILL OF MATERIAL

REV.	DESCRIPTION	DATE	DET.	CKD.

D.S. BROWN
A GIBRALTAR INDUSTRIES COMPANY

THE D.S. BROWN COMPANY
300 E. CHERRY STREET
NORTH BALTIMORE, OHIO 45872
419.257.3561
FAX: 419.257.0332
WWW.DSBROWN.COM

LOCATION — TOWN OF WATERBURY
BRIDGE — I-89 EXIT RAMP B OVER STOWE ST
PROJECT — IM 089-2(43)
BRIDGE NO. — 46A
HIGHWAY NO. — INTERSTATE 89
DESIGNER — VERMONT AGENCY OF TRANSPORTATION
CUSTOMER — BECK AND BELLUCCI, INC

ITEM	QUANTITY
–	–
–	–
–	–
–	–
–	–
–	–
–	–
–	–
–	–

DESCRIPTION: EXPANSION JOINT DETAILS
FABRICATION DETAILS

SCALE:	DRAWN BY:	CHECKED BY:	DATE:	
N.T.S.	JAC	JEB	7/15/15	–
PROJECT NUMBER	PRODUCT CODE	RELEASE	SHEET	
44596	1043	1	09	

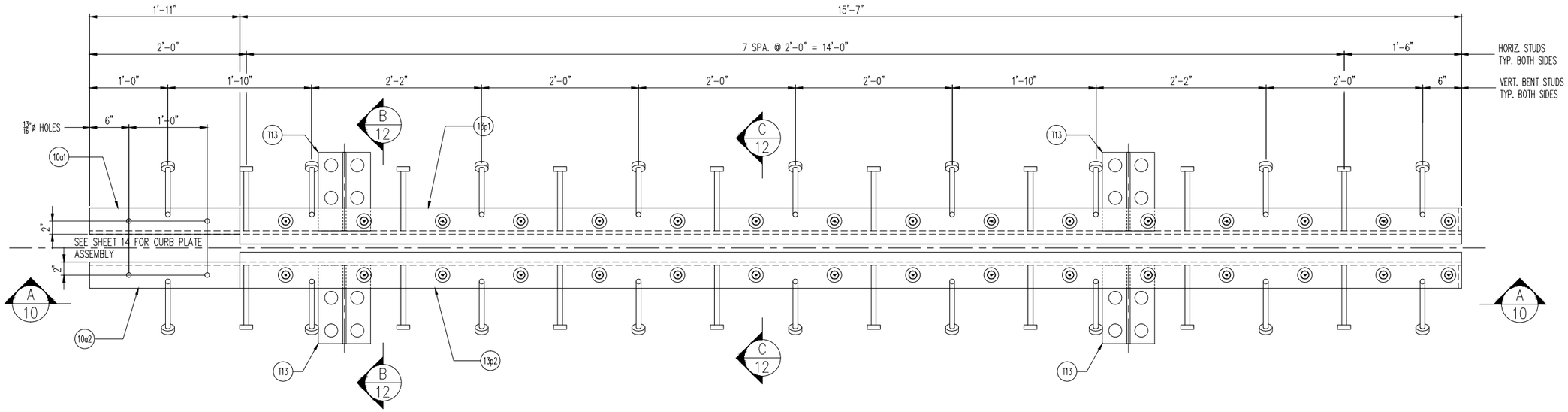

1 – EXPANSION JOINT SUB-ASSEMBLY – A5

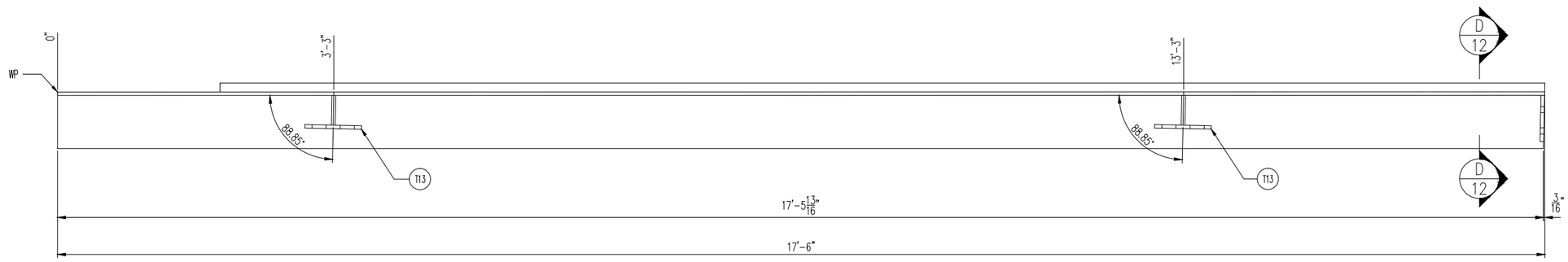

SECTION "A-A"

WELD STUDS NOT SHOWN FOR CLARITY

SEE SHEET 16 FOR JOINT ASSEMBLY AND GENERAL NOTES

SEE SHEET 17 FOR BILL OF MATERIAL

REV.	DESCRIPTION	DATE	DET.	CKD.

D.S. BROWN
A GIBRALTAR INDUSTRIES COMPANY

THE D.S. BROWN COMPANY
300 E. CHERRY STREET
NORTH BALTIMORE, OHIO 45872
419.257.3561
FAX: 419.257.0332
WWW.DSBROWN.COM

LOCATION — TOWN OF WATERBURY
BRIDGE — I-89 EXIT RAMP B OVER STOWE ST
PROJECT — IM 089-2(43)
BRIDGE NO. — 46A
HIGHWAY NO. — INTERSTATE 89
DESIGNER — VERMONT AGENCY OF TRANSPORTATION
CUSTOMER — BECK AND BELLUCCI, INC

ITEM	QUANTITY
–	–
–	–
–	–
–	–
–	–
–	–
–	–
–	–
–	–

DESCRIPTION:
EXPANSION JOINT DETAILS
FABRICATION DETAILS

SCALE:	DRAWN BY:	CHECKED BY:	DATE:	
N.T.S.	JAC	JEB	7/15/15	–
PROJECT NUMBER	PRODUCT CODE	RELEASE	SHEET	
44596	1043	1	10	

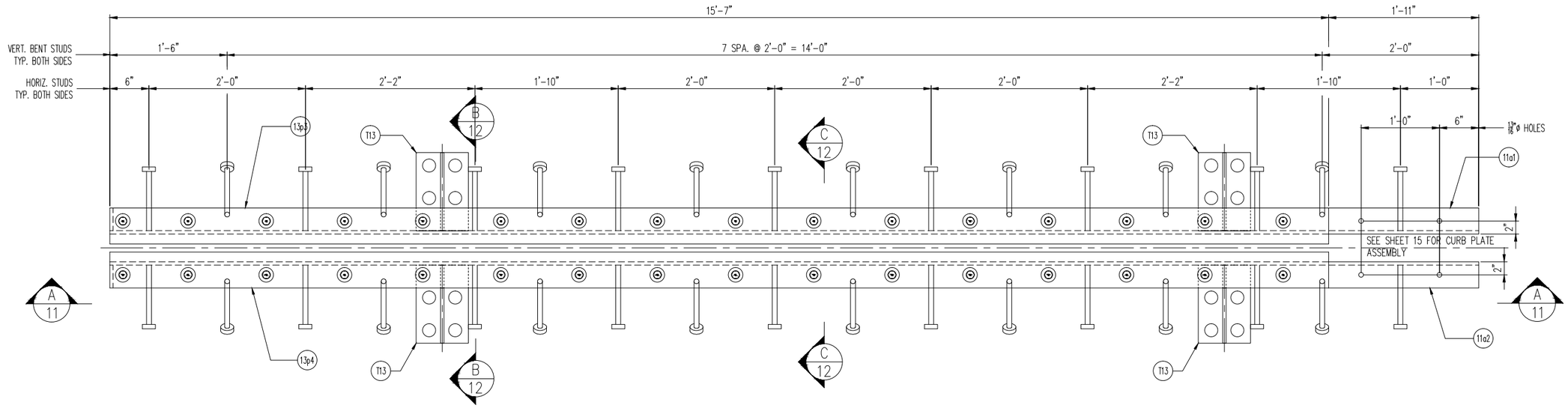

1 – EXPANSION JOINT SUB-ASSEMBLY – A6

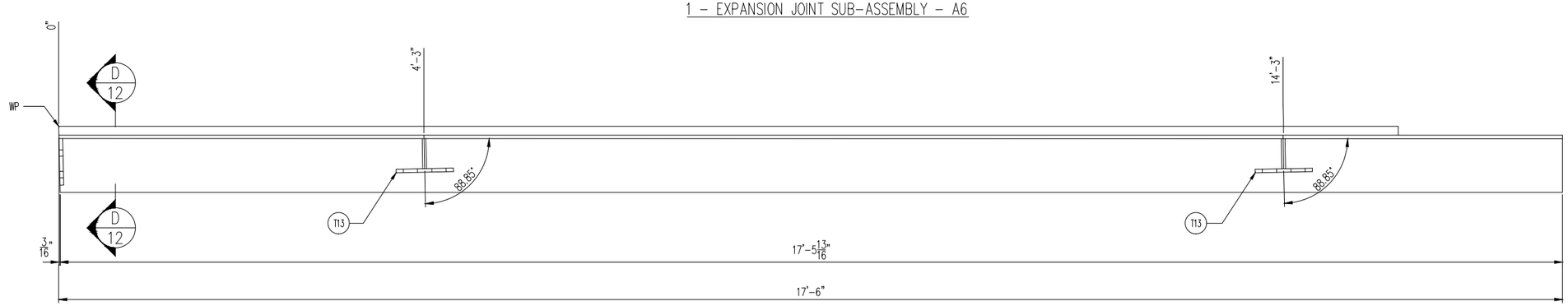

SECTION "A-A"

WELD STUDS NOT SHOWN FOR CLARITY

SEE SHEET 16 FOR JOINT ASSEMBLY AND GENERAL NOTES

SEE SHEET 17 FOR BILL OF MATERIAL

REV.	DESCRIPTION	DATE	DET.	CKD.

D.S. BROWN
A GIBRALTAR INDUSTRIES COMPANY

THE D.S. BROWN COMPANY
300 E. CHERRY STREET
NORTH BALTIMORE, OHIO 45872
419.257.3561
FAX: 419.257.0332
WWW.DSBROWN.COM

LOCATION — TOWN OF WATERBURY
BRIDGE — I-89 EXIT RAMP B OVER STOWE ST
PROJECT — IM 089-2(43)
BRIDGE NO. — 46A
HIGHWAY NO. — INTERSTATE 89
DESIGNER — VERMONT AGENCY OF TRANSPORTATION
CUSTOMER — BECK AND BELLUCCI, INC

ITEM	QUANTITY
–	–
–	–
–	–
–	–
–	–
–	–
–	–
–	–
–	–

DESCRIPTION:
EXPANSION JOINT DETAILS
FABRICATION DETAILS

SCALE:	DRAWN BY:	CHECKED BY:	DATE:	
N.T.S.	JAC	JEB	7/15/15	–

PROJECT NUMBER	PRODUCT CODE	RELEASE	SHEET
44596	1043	1	11

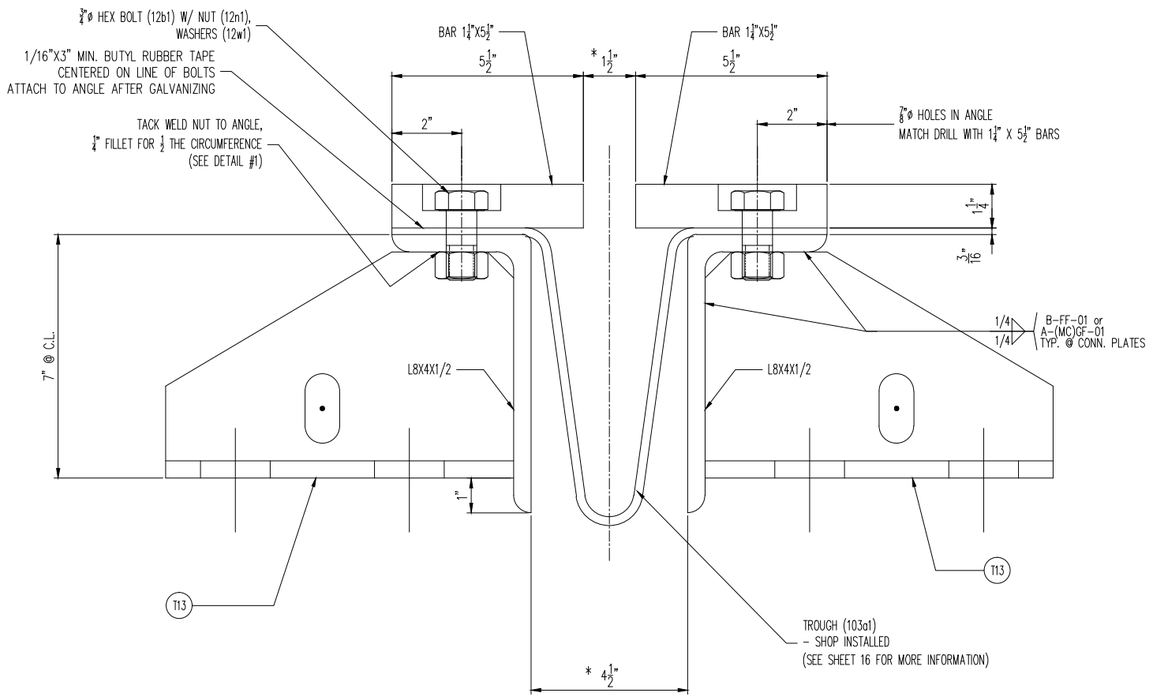

SECTION "B-B"

* SHIPPING DIMENSION @ 45° F.

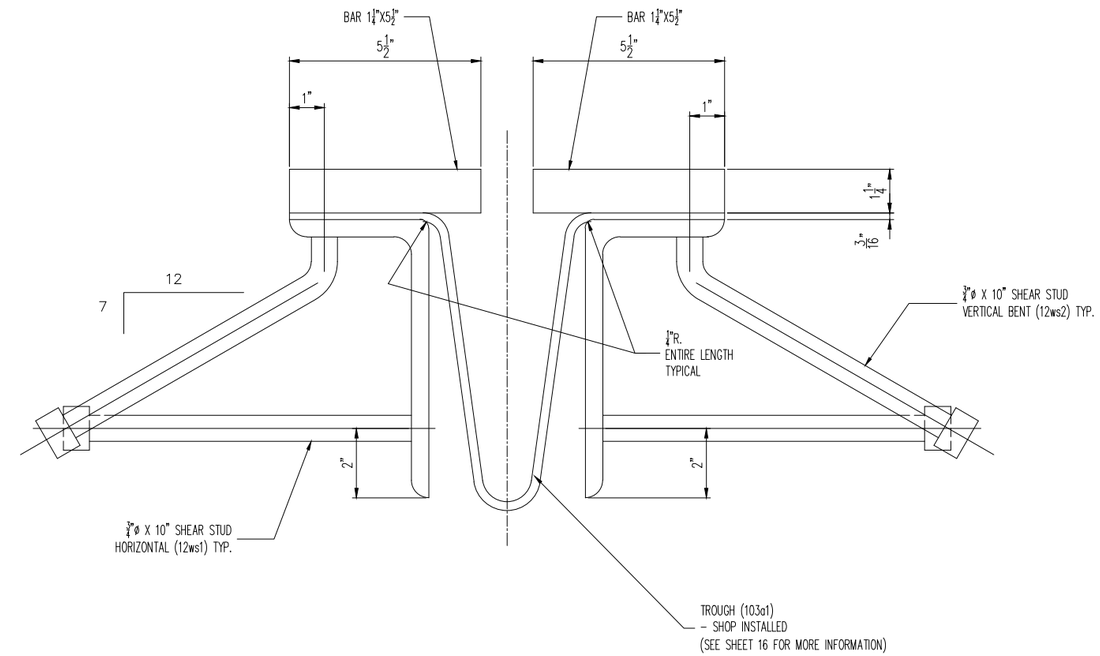

SECTION "C-C"

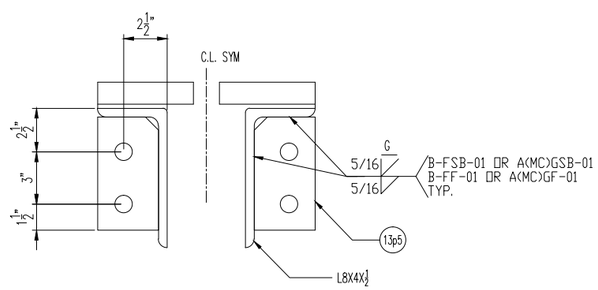

SECTION "D-D"

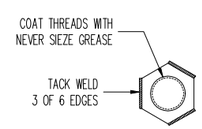

DETAIL #1

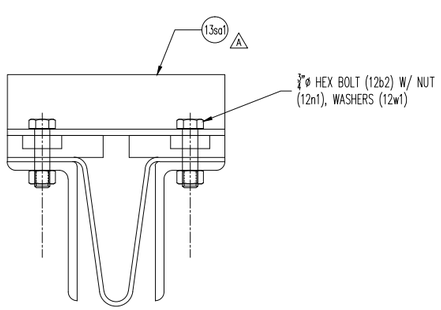

SHIPPING DEVICE

SEE SHEET 16 FOR JOINT ASSEMBLY AND GENERAL NOTES

SEE SHEET 17 FOR BILL OF MATERIAL

REV.	DESCRIPTION	DATE	DET.	CKD.
A	REV. PER APPROVAL COMMENTS	8/25/15	JEB	JAC

D.S. BROWN
A GIBRALTAR INDUSTRIES COMPANY

THE D.S. BROWN COMPANY
300 E. CHERRY STREET
NORTH BALTIMORE, OHIO 45872
419.257.3561
FAX: 419.257.0332
WWW.DSBROWN.COM

LOCATION — TOWN OF WATERBURY
BRIDGE — I-89 EXIT RAMP B OVER STOWE ST
PROJECT — IM 089-2(43)
BRIDGE NO. — 46A
HIGHWAY NO. — INTERSTATE 89
DESIGNER — VERMONT AGENCY OF TRANSPORTATION
CUSTOMER — BECK AND BELLUCCI, INC

ITEM	QUANTITY
–	–
–	–
–	–
–	–
–	–
–	–
–	–
–	–
–	–

DESCRIPTION:
EXPANSION JOINT DETAILS
FABRICATION DETAILS

SCALE:	DRAWN BY:	CHECKED BY:	DATE:	
N.T.S.	JAC	JEB	7/15/15	–
PROJECT NUMBER	PRODUCT CODE	RELEASE	SHEET	
44596	1043	1	12	

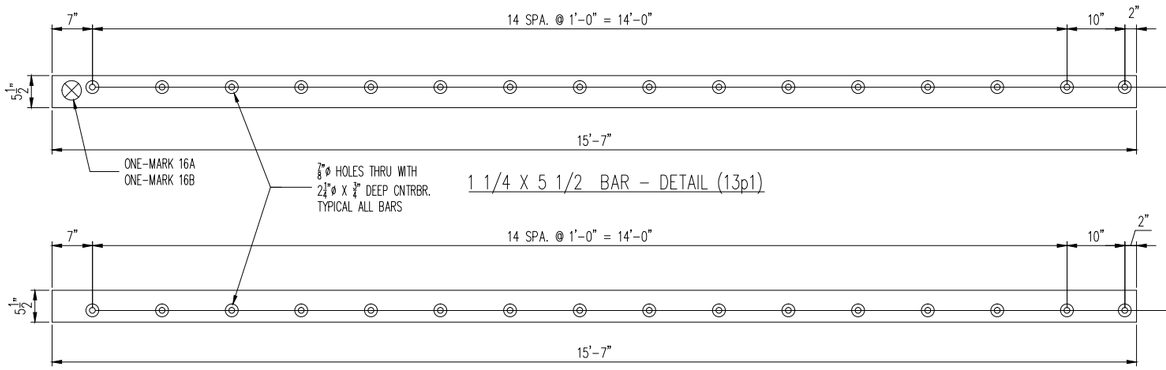

1 1/4 X 5 1/2 BAR – DETAIL (13p1)

1 1/4 X 5 1/2 BAR – DETAIL (13p2)

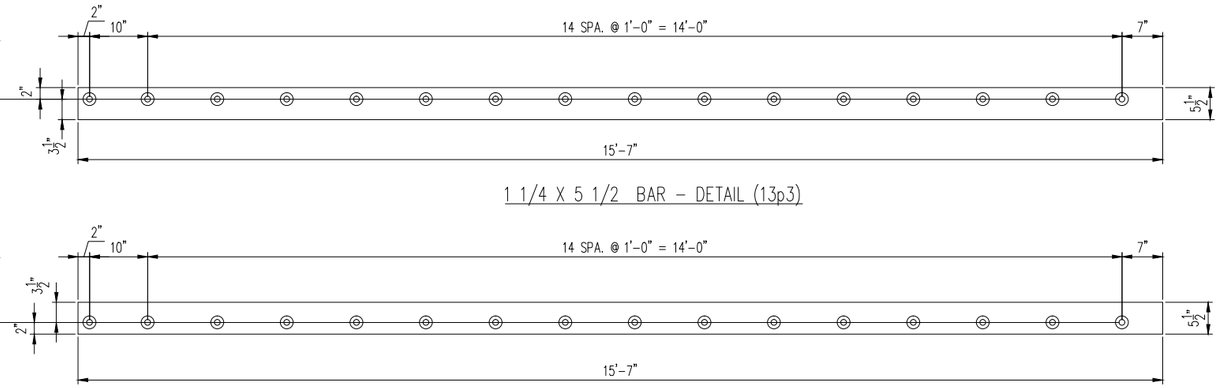

1 1/4 X 5 1/2 BAR – DETAIL (13p3)

1 1/4 X 5 1/2 BAR – DETAIL (13p4)

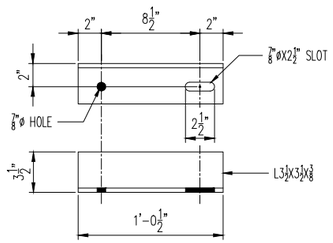

SHIPPING ANGLE – DETAIL (13sa1) △A

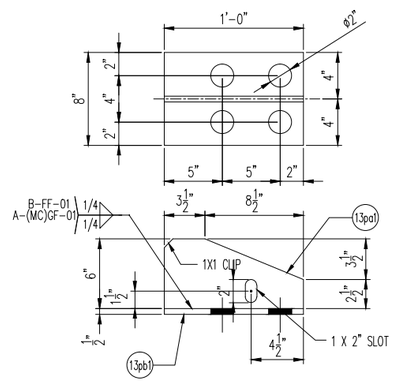

DETAIL (T13)

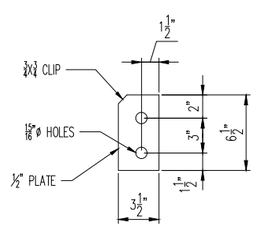

DETAIL (13p5)

SEE SHEET 16 FOR JOINT ASSEMBLY AND GENERAL NOTES

SEE SHEET 17 FOR BILL OF MATERIAL

REV.	DESCRIPTION	DATE	DET.	CKD.
△A	REV. PER APPROVAL COMMENTS	8/25/15	JEB	JAC

D.S. BROWN
A GIBRALTAR INDUSTRIES COMPANY

THE D.S. BROWN COMPANY
300 E. CHERRY STREET
NORTH BALTIMORE, OHIO 45872
419.257.3561
FAX: 419.257.0332
WWW.DSBROWN.COM

LOCATION — TOWN OF WATERBURY
BRIDGE — I-89 EXIT RAMP B OVER STOWE ST
PROJECT — IM 089-2(43)
BRIDGE NO. — 46A
HIGHWAY NO. — INTERSTATE 89
DESIGNER — VERMONT AGENCY OF TRANSPORTATION
CUSTOMER — BECK AND BELLUCCI, INC

ITEM	QUANTITY
–	–
–	–
–	–
–	–
–	–
–	–
–	–
–	–
–	–

DESCRIPTION:
EXPANSION JOINT DETAILS
FABRICATION DETAILS

SCALE:	DRAWN BY:	CHECKED BY:	DATE:	
N.T.S.	JAC	JEB	7/15/15	–
PROJECT NUMBER	PRODUCT CODE	RELEASE	SHEET	
44596	1043	1	13	

FIELD NOTE:
PROJECTING THREADS OF THE ¾"ø BOLTS SHALL BE GREASED IN THE FIELD BY THE CONTRACTOR PRIOR TO PLACING THE ADJACENT CONCRETE. THIS WILL FACILITATE BOLT REMOVAL IF REQUIRED IN THE FUTURE.

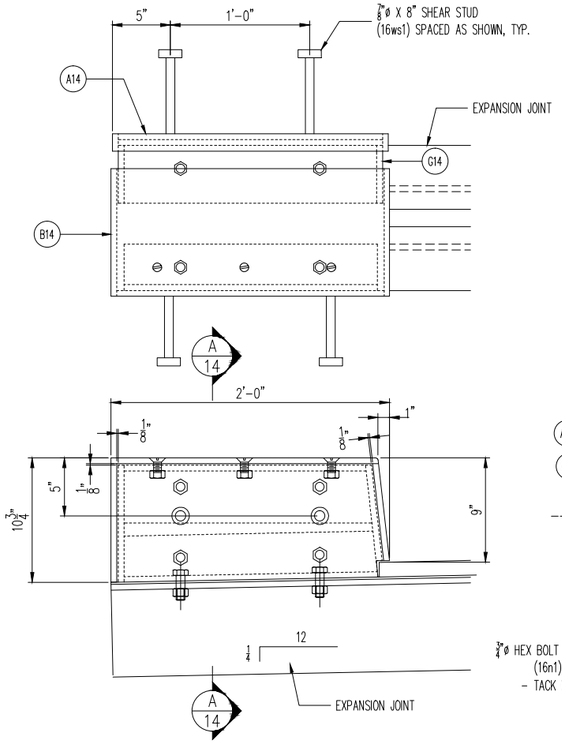

DETAIL #2

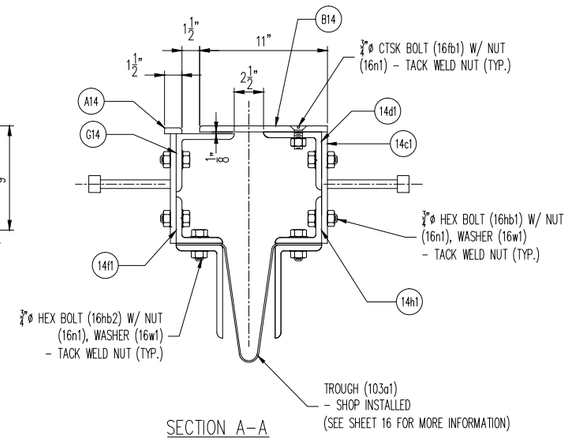

SECTION A-A

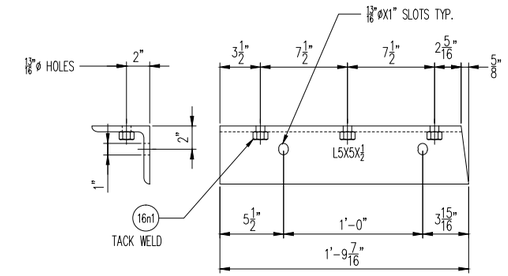

DETAIL (14d1)

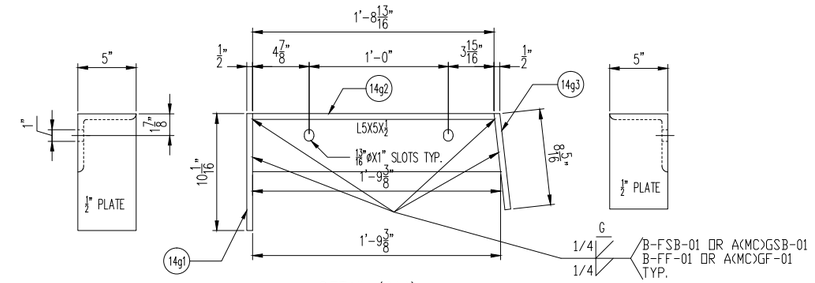

DETAIL (G14)

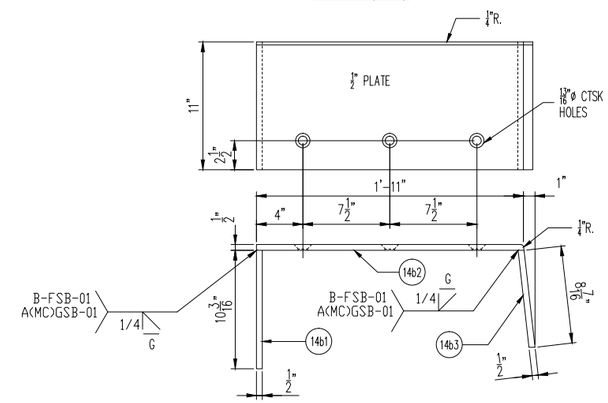

DETAIL (B14)

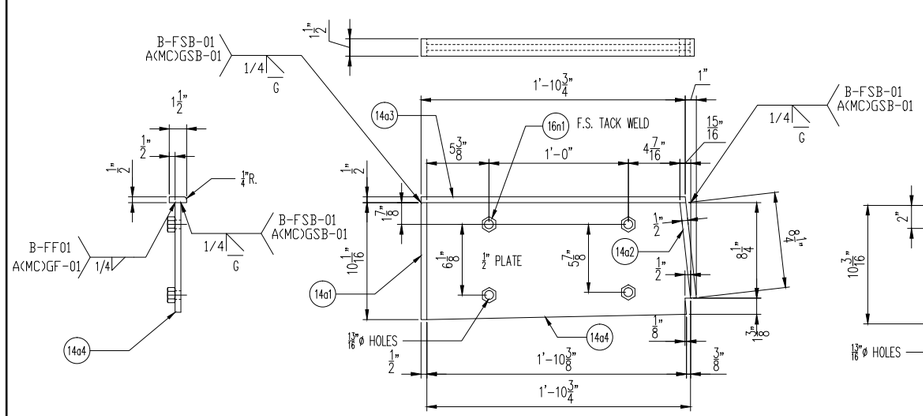

DETAIL (A14)

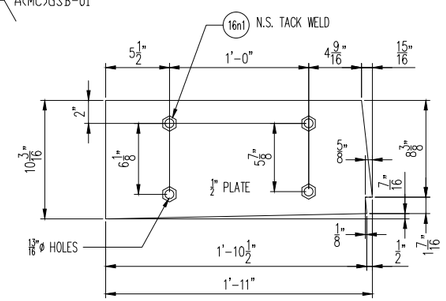

DETAIL (14c1)

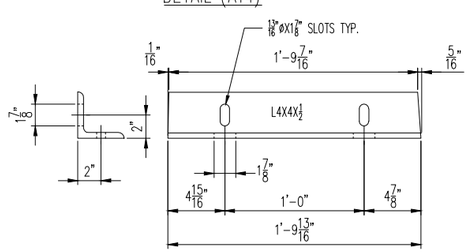

DETAIL (14f1)

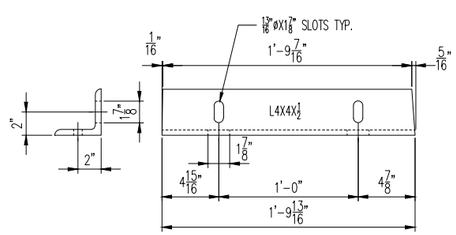

DETAIL (14h1)

SEE SHEET 16 FOR JOINT ASSEMBLY AND GENERAL NOTES
SEE SHEET 17 FOR BILL OF MATERIAL

REV.	DESCRIPTION	DATE	DET.	CKD.

D.S. BROWN
A GIBRALTAR INDUSTRIES COMPANY
THE D.S. BROWN COMPANY
300 E. CHERRY STREET
NORTH BALTIMORE, OHIO 45872
419.257.3561
FAX: 419.257.0332
WWW.DSBROWN.COM

	ITEM	QUANTITY
LOCATION — TOWN OF WATERBURY	–	–
BRIDGE — I-89 EXIT RAMP B OVER STOWE ST	–	–
PROJECT — IM 089-2(43)	–	–
BRIDGE NO. — 46A	–	–
HIGHWAY NO. — INTERSTATE 89	–	–
DESIGNER — VERMONT AGENCY OF TRANSPORTATION	–	–
CUSTOMER — BECK AND BELLUCCI, INC	–	–
	–	–
	–	–

DESCRIPTION: EXPANSION JOINT DETAILS
FABRICATION DETAILS

SCALE:	DRAWN BY:	CHECKED BY:	DATE:	
N.T.S.	JAC	JEB	7/15/15	–

PROJECT NUMBER	PRODUCT CODE	RELEASE	SHEET
44596	1043	1	14

FIELD NOTE:
PROJECTING THREADS OF THE ¾"ø BOLTS SHALL BE GREASED IN THE FIELD BY THE CONTRACTOR PRIOR TO PLACING THE ADJACENT CONCRETE. THIS WILL FACILITATE BOLT REMOVAL IF REQUIRED IN THE FUTURE.

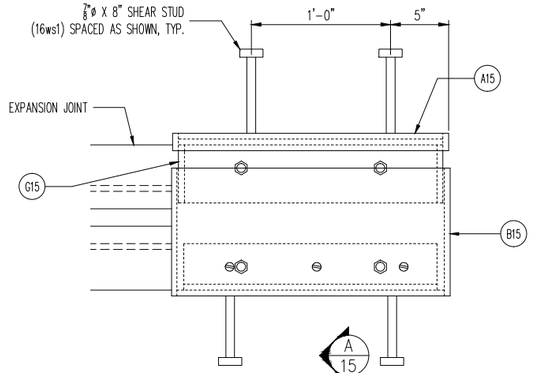

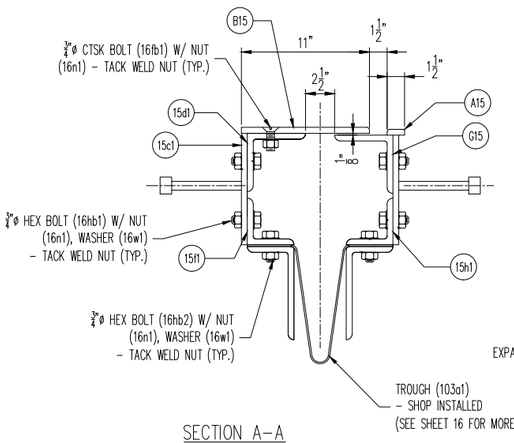

SECTION A-A

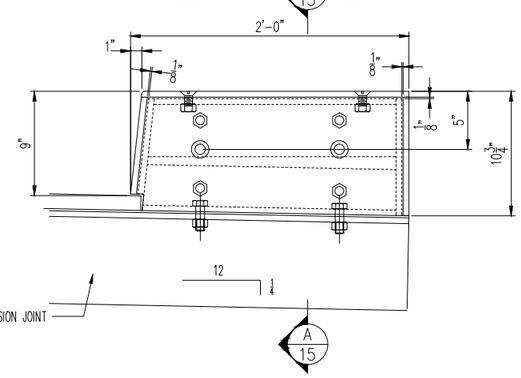

DETAIL #3

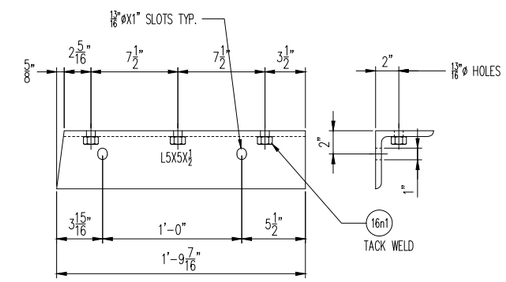

DETAIL (15d1)

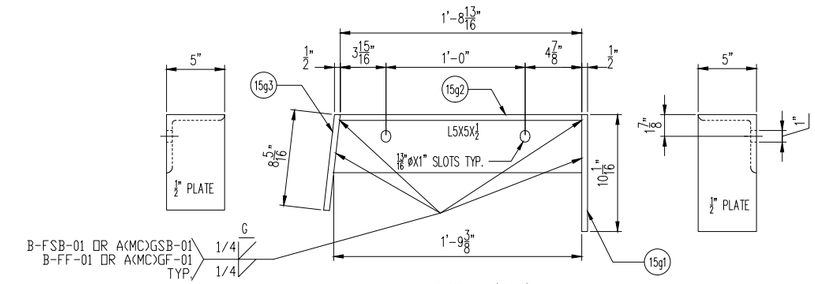

DETAIL (G15)

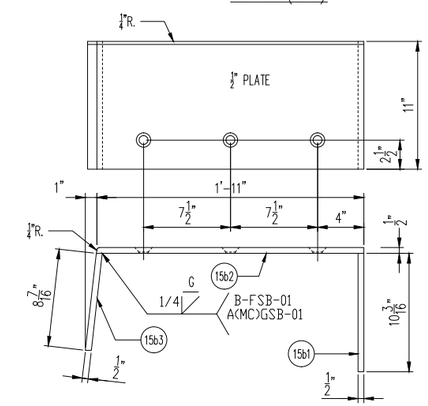

DETAIL (B15)

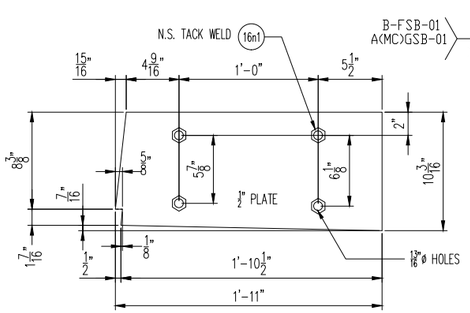

DETAIL (15c1)

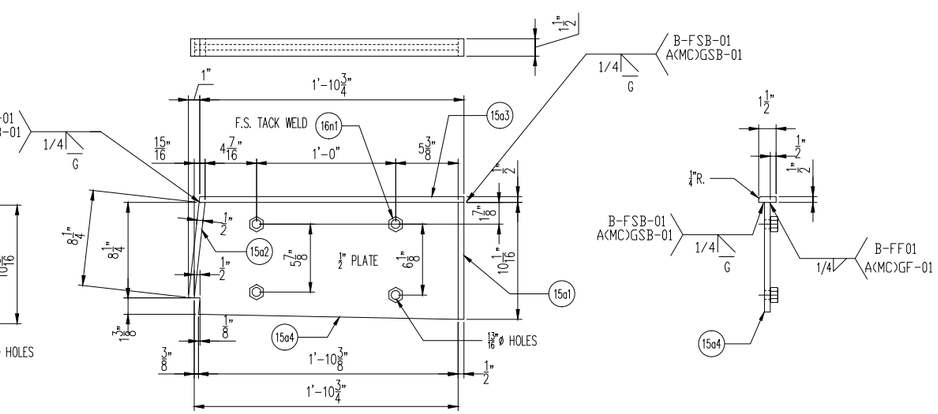

DETAIL (A15)

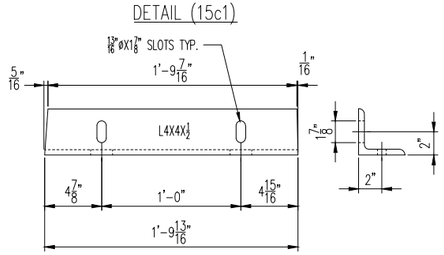

DETAIL (15f1)

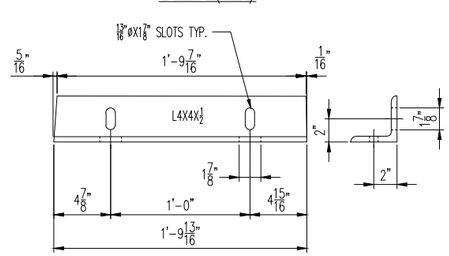

DETAIL (15h1)

SEE SHEET 16 FOR JOINT ASSEMBLY AND GENERAL NOTES
SEE SHEET 17 FOR BILL OF MATERIAL

REV.	DESCRIPTION	DATE	DET.	CKD.

D.S. BROWN
A GIBRALTAR INDUSTRIES COMPANY
THE D.S. BROWN COMPANY
300 E. CHERRY STREET
NORTH BALTIMORE, OHIO 45872
419.257.3561
FAX: 419.257.0332
WWW.DSBROWN.COM

LOCATION — TOWN OF WATERBURY
BRIDGE — I-89 EXIT RAMP B OVER STOWE ST
PROJECT — IM 089-2(43)
BRIDGE NO. — 46A
HIGHWAY NO. — INTERSTATE 89
DESIGNER — VERMONT AGENCY OF TRANSPORTATION
CUSTOMER — BECK AND BELLUCCI, INC

ITEM	QUANTITY
–	–
–	–
–	–
–	–
–	–
–	–
–	–
–	–
–	–
–	–

DESCRIPTION: EXPANSION JOINT DETAILS
FABRICATION DETAILS

SCALE:	DRAWN BY:	CHECKED BY:	DATE:	
N.T.S.	JAC	JEB	7/15/15	–

PROJECT NUMBER	PRODUCT CODE	RELEASE	SHEET
44596	1043	1	15

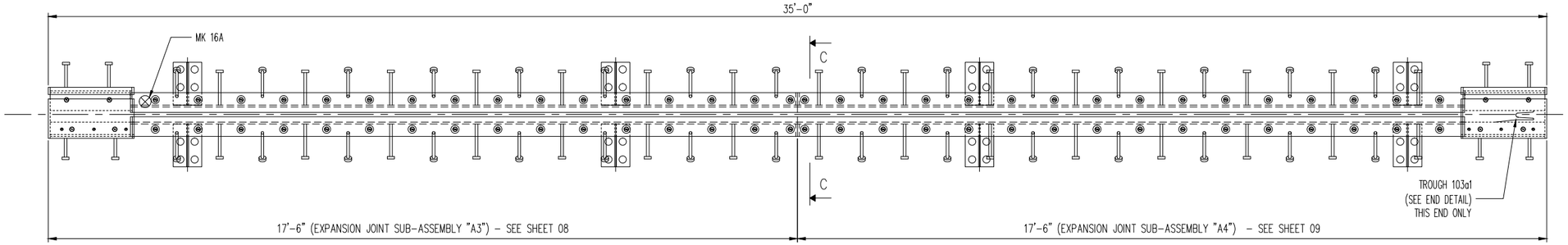

1 -EXPANSION JOINT - 16A
ROADWAY SIDE UP

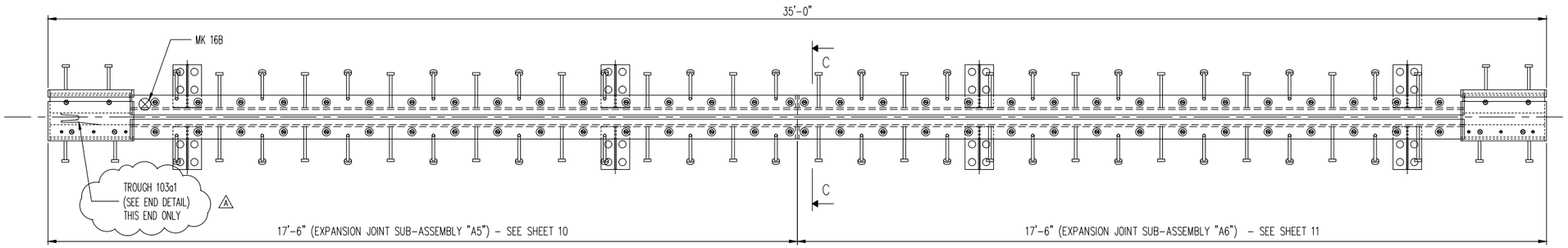

1 -EXPANSION JOINT - 16B
ROADWAY SIDE UP

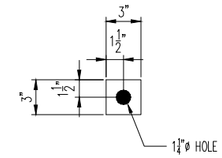

128 - PLATE WASHERS - 16C

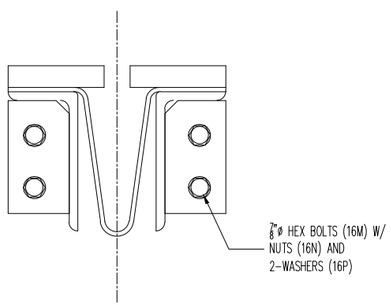

SECTION C-C

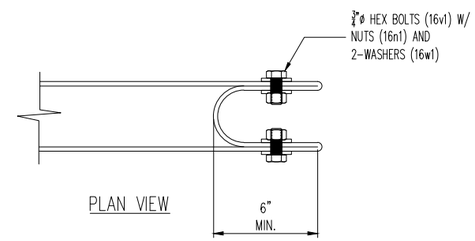

PLAN VIEW

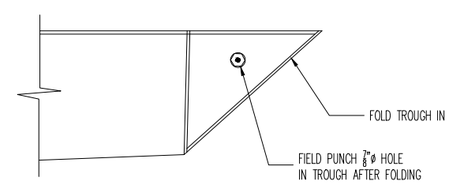

TROUGH END DETAIL #1

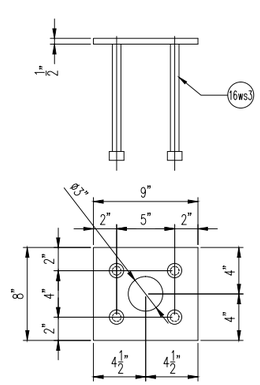

8 - EMBEDS - 16G

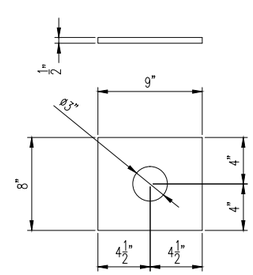

8 - PLATES - 16F

GENERAL NOTES

MATERIAL AND WORKMANSHIP SHALL BE IN ACCORDANCE WITH THE VERMONT AGENCY OF TRANSPORTATION "STANDARD SPECIFICATIONS FOR CONSTRUCTION, 2011 EDITION" AS MODIFIED BY THE CONTRACT PLANS.
GENERAL SHOP PRACTICES, STRUCTURAL FABRICATION, WELDING AND ASSEMBLY SHALL BE GOVERNED BY ANSI/AASHTO/AWS D1.5 BRIDGE WELDING CODE

ALL STUD ANCHORS SHALL BE ASTM-A108 STEEL AND AUTOMATIC END-WELDED w/ COMPLETE FUSION.
B-FF-STUD-REP-01 OR A-SM-STUD-REP-01 WILL BE USED, AS REQUIRED, TO REPAIR STUD WELDS.

EXPANSION JOINT SHALL BE HOT-DIPPED GALVANIZED TO ASTM-A123 AFTER FABRICATION.

ANY TIGHTLY ADHERENT WELD SPATTER NEED NOT BE REMOVED IN COATED AREAS TO BE CAST IN CONCRETE.
ANY GALVANIZED COATING DAMAGED DURING FIELD WELDING OR FROM OTHER CAUSES MUST BE REPAIRED IN ACCORDANCE WITH ASTM-A780.

ALL ASSEMBLIES TO BE PIECE MARKED.

EXPANSION JOINTS TO FOLLOW ROADWAY CROSS SLOPE AND GRADE.

CONTRACTOR TO POUR AND VIBRATE CONCRETE INTO BLOCKOUT TO ENSURE PROPER CONSOLIDATION AROUND ALL EMBEDDED COMPONENTS.

THE CONTRACTOR SHALL VERIFY ALL DIMENSIONS PRIOR TO FABRICATION TO ENSURE ACCURACY OF THE EXPANSION JOINT. STAMPED APPROVED DRAWINGS ASSUME LENGTHS HAVE BEEN VERIFIED BY CONTRACTOR.

GRIND ALL EXPOSED EDGES OF STEEL PLATES AND SHAPES TO A 1/16" RADIUS PRIOR TO GALVANIZING

SEAL WELD ALL CONNECTIONS WHERE POSSIBLE.

BUTYL RUBBER TAPE SHALL CONFORM TO STANDARD SPECIFICATION 707.12 AND AASHTO M198, TYPE B.

SEE SHEET 16 FOR JOINT ASSEMBLY AND GENERAL NOTES
SEE SHEET 17 FOR BILL OF MATERIAL

REV.	DESCRIPTION	DATE	DET.	CKD.
A	REV. PER APPROVAL COMMENTS	8/25/15	JEB	JAC

D.S. BROWN
A GIBRALTAR INDUSTRIES COMPANY
THE D.S. BROWN COMPANY
300 E. CHERRY STREET
NORTH BALTIMORE, OHIO 45872
419.257.3561
FAX: 419.257.0332
WWW.DSBROWN.COM

LOCATION — TOWN OF WATERBURY
BRIDGE — I-89 EXIT RAMP B OVER STOWE ST
PROJECT — IM 089-2(43)
BRIDGE NO. — 46A
HIGHWAY NO. — INTERSTATE 89
DESIGNER — VERMONT AGENCY OF TRANSPORTATION
CUSTOMER — BECK AND BELLUCCI, INC

ITEM	QUANTITY
–	–
–	–
–	–
–	–
–	–
–	–
–	–
–	–
–	–

DESCRIPTION:
EXPANSION JOINT DETAILS
FABRICATION DETAILS

SCALE:	DRAWN BY:	CHECKED BY:	DATE:	
N.T.S.	JAC	JEB	7/15/15	–
PROJECT NUMBER	PROJECT CODE	RELEASE	SHEET	
44596	1043	1	16	

MK	QTY	DESCRIPTION	MATERIAL	LENGTH	REMARKS	WT*	REV
16A	1	BOLT DOWN EXPANSION JOINT			35'-0"	3802	-
8a1	1	L8 X 4 X 1/2	M270 GR 50 (A709 OR A992)	17'-6	M111-HDG (A123)	343	-
8a2	1	L8 X 4 X 1/2	M270 GR 50 (A709 OR A992)	17'-6	M111-HDG (A123)	343	-
9a1	1	L8 X 4 X 1/2	M270 GR 50 (A709 OR A992)	17'-6	M111-HDG (A123)	343	-
9a2	1	L8 X 4 X 1/2	M270 GR 50 (A709 OR A992)	17'-6	M111-HDG (A123)	343	-
12b1	46	Ø3/4 X 2 1/4 HEX HEAD BOLT	M164 (A325)		M232-HDG (A153)	< 1	-
12b2	18	Ø3/4 X 3 3/4 HEX HEAD BOLT	M164 (A325)		SHIPPING HARDWARE; M232-HDG (A153)	< 1	-
12n1	64	Ø3/4 HEX NUT	M291-A, HEAVY HEX (A563 GR A)		M232-HDG (A153)	< 1	-
12tp1	1	BUTYL RUBBER TAPE	-	70'-0	SEE GENERAL NOTES;		-
12w1	64	Ø3/4 FLAT WASHER	M293 (F436)		M232-HDG (A153)	< 1	-
12ws1	34	Ø3/4 X 10 WELD STUD	M169 (A108)		M111-HDG (A123)	1	-
12ws2	38	Ø3/4 X 10 WELD STUD	M169 (A108)		M111-HDG (A123)	1	-
13p1	1	1 1/4 X 5 1/2	M270 GR 50 (A709)	15'-7	M111-HDG (A123)	365	-
13p2	1	1 1/4 X 5 1/2	M270 GR 50 (A709)	15'-7	M111-HDG (A123)	365	-
13p3	1	1 1/4 X 5 1/2	M270 GR 50 (A709)	15'-7	M111-HDG (A123)	365	-
13p4	1	1 1/4 X 5 1/2	M270 GR 50 (A709)	15'-7	M111-HDG (A123)	365	-
13pa1	8	1/2 X 6	M270 GR 50 (A709)	1'-0	M111-HDG (A123)	10	-
13pa5	4	1/2 X 3 1/2	M270 GR 50 (A709)	0'-6 1/2	M111-HDG (A123)	3	-
13pb1	8	1/2 X 8	M270 GR 50 (A709)	1'-0	M111-HDG (A123)	14	-
13sa1	9	L3 1/2 X 3 1/2 X 3/8	M270 GR 36 (A709 OR A992)	1'-0 1/2	SHIPPING ANGLE; M111-HDG (A123)	9	-
14a1	1	1/2 X 1 1/2	M270 GR 36 OR 50 (A709)	0'-10 1/16	M111-HDG (A123)	2	A
14a2	1	1/2 X 1 1/2	M270 GR 36 OR 50 (A709)	0'-8 1/4	M111-HDG (A123)	2	-
14a3	1	1/2 X 1 1/2	M270 GR 36 OR 50 (A709)	1'-10 3/4	M111-HDG (A123)	5	-
14a4	1	1/2 X 10 1/16	M270 GR 36 OR 50 (A709)	1'-10 3/4	M111-HDG (A123)	32	-
14b1	1	1/2 X 10 3/16	M270 GR 36 OR 50 (A709)	0'-11	M111-HDG (A123)	16	-
14b2	1	1/2 X 11	M270 GR 36 OR 50 (A709)	1'-11	M111-HDG (A123)	36	-
14b3	1	1/2 X 8 7/16	M270 GR 36 OR 50 (A709)	0'-11	M111-HDG (A123)	13	-
14c1	1	1/2 X 10 3/16	M270 GR 36 OR 50 (A709)	1'-11	M111-HDG (A123)	33	-
14d1	1	L5 X 5 X 1/2	M270 GR 36 (A709 OR A992)	1'-9 7/16		29	-
14f1	1	L4 X 4 X 1/2	M270 GR 36 (A709 OR A992)	1'-9 13/16		23	-
14g1	1	1/2 X 5	M270 GR 36 OR 50 (A709)	0'-10 1/16	M111-HDG (A123)	7	-
14g2	1	L5 X 5 X 1/2	M270 GR 36 (A709 OR A992)	1'-9 3/8		29	A
14g3	1	1/2 X 5	M270 GR 36 OR 50 (A709)	0'-8 5/16	M111-HDG (A123)	6	A
14h1	1	L4 X 4 X 1/2	M270 GR 36 (A709 OR A992)	1'-9 13/16		23	-
15a1	1	1/2 X 1 1/2	M270 GR 36 OR 50 (A709)	0'-10 1/16	M111-HDG (A123)	2	-
15a2	1	1/2 X 1 1/2	M270 GR 36 OR 50 (A709)	0'-8 1/4	M111-HDG (A123)	2	-
15a3	1	1/2 X 1 1/2	M270 GR 36 OR 50 (A709)	1'-10 3/4	M111-HDG (A123)	5	-
15a4	1	1/2 X 10 1/16	M270 GR 36 OR 50 (A709)	1'-10 3/4	M111-HDG (A123)	32	-
15b1	1	1/2 X 10 3/16	M270 GR 36 OR 50 (A709)	0'-11	M111-HDG (A123)	16	-
15b2	1	1/2 X 11	M270 GR 36 OR 50 (A709)	1'-11	M111-HDG (A123)	36	-
15b3	1	1/2 X 8 7/16	M270 GR 36 OR 50 (A709)	0'-11	M111-HDG (A123)	13	-
15c1	1	1/2 X 10 3/16	M270 GR 36 OR 50 (A709)	1'-11	M111-HDG (A123)	33	-
15d1	1	L5 X 5 X 1/2	M270 GR 36 (A709 OR A992)	1'-9 7/16		29	-
15f1	1	L4 X 4 X 1/2	M270 GR 36 (A709 OR A992)	1'-9 13/16		23	-
15g1	1	1/2 X 5	M270 GR 36 OR 50 (A709)	0'-10 1/16	M111-HDG (A123)	7	-
15g2	1	L5 X 5 X 1/2	M270 GR 36 (A709 OR A992)	1'-9 3/8		29	A
15g3	1	1/2 X 5	M270 GR 36 OR 50 (A709)	0'-8 5/16	M111-HDG (A123)	6	-
15h1	1	L4 X 4 X 1/2	M270 GR 36 (A709 OR A992)	1'-9 13/16		23	-
16fb1	6	Ø3/4 X 2 SLOTTED FLAT CTSK HD CAP SCREW	A449		M232-HDG (A153)	< 1	-
16hb1	16	Ø3/4 X 2 1/4 HEX HEAD BOLT	M164 (A325)		M232-HDG (A153)	< 1	-
16hb2	8	Ø3/4 X 2 1/2 HEX HEAD BOLT	M164 (A325)		M232-HDG (A153)	< 1	-
16m1	6	Ø7/8 X 2 1/2 HEX HEAD BOLT	M164 (A325)		(2) ADDED FOR TESTING; M232-HDG (A153); ROCAP	< 1	-
16n1	36	Ø3/4 HEX NUT	M291-A, HEAVY HEX (A563 GR A)		M232-HDG (A153)	< 1	-
16n2	6	Ø7/8 HEX NUT	M291-A OR DH (A563 GR A OR GR DH)		(2) ADDED FOR TESTING; M232-HDG (A153); ROCAP	< 1	-
16p1	12	Ø7/8 FLAT WASHER	M293 (F436)		(4) ADDED FOR TESTING; M232-HDG (A153); ROCAP	< 1	-
16v1	4	Ø3/4 X 1 1/2 HEX HEAD BOLT	M164 (A325)		(2) ADDED FOR TESTING; M232-HDG (A153); ROCAP	< 1	-
16w1	32	Ø3/4 FLAT WASHER	M293 (F436)		M232-HDG (A153)	< 1	-
16ws1	8	Ø7/8 X 8 WELD STUD	M169 (A108)		M111-HDG (A123)	1	-
16B	1	BOLT DOWN EXPANSION JOINT			35'-0"	3802	-
8a1	1	L8 X 4 X 1/2	M270 GR 50 (A709 OR A992)	17'-6	M111-HDG (A123)	343	-
8a2	1	L8 X 4 X 1/2	M270 GR 50 (A709 OR A992)	17'-6	M111-HDG (A123)	343	-
9a1	1	L8 X 4 X 1/2	M270 GR 50 (A709 OR A992)	17'-6	M111-HDG (A123)	343	-
9a2	1	L8 X 4 X 1/2	M270 GR 50 (A709 OR A992)	17'-6	M111-HDG (A123)	343	-
12b1	46	Ø3/4 X 2 1/4 HEX HEAD BOLT	M164 (A325)		M232-HDG (A153)	< 1	-
12b2	18	Ø3/4 X 3 3/4 HEX HEAD BOLT	M164 (A325)		SHIPPING HARDWARE; M232-HDG (A153)	< 1	-
12n1	64	Ø3/4 HEX NUT	M291-A, HEAVY HEX (A563 GR A)		M232-HDG (A153)	< 1	-
12tp1	1	BUTYL RUBBER TAPE	-	70'-0	SEE GENERAL NOTES;		-
12w1	64	Ø3/4 FLAT WASHER	M293 (F436)		M232-HDG (A153)	< 1	-
12ws1	34	Ø3/4 X 10 WELD STUD	M169 (A108)		M111-HDG (A123)	1	-
12ws2	38	Ø3/4 X 10 WELD STUD	M169 (A108)		M111-HDG (A123)	1	-
13p1	1	1 1/4 X 5 1/2	M270 GR 50 (A709)	15'-7	M111-HDG (A123)	365	-
13p2	1	1 1/4 X 5 1/2	M270 GR 50 (A709)	15'-7	M111-HDG (A123)	365	-
13p3	1	1 1/4 X 5 1/2	M270 GR 50 (A709)	15'-7	M111-HDG (A123)	365	-
13p4	1	1 1/4 X 5 1/2	M270 GR 50 (A709)	15'-7	M111-HDG (A123)	365	-
13pa1	8	1/2 X 6	M270 GR 50 (A709)	1'-0	M111-HDG (A123)	10	-
13pa5	4	1/2 X 3 1/2	M270 GR 50 (A709)	0'-6 1/2	M111-HDG (A123)	3	-
13pb1	8	1/2 X 8	M270 GR 50 (A709)	1'-0	M111-HDG (A123)	14	-
13sa1	9	L3 1/2 X 3 1/2 X 3/8	M270 GR 36 (A709 OR A992)	1'-0 1/2	SHIPPING ANGLE; M111-HDG (A123)	9	-
14a1	1	1/2 X 1 1/2	M270 GR 36 OR 50 (A709)	0'-10 1/16	M111-HDG (A123)	2	A
14a2	1	1/2 X 1 1/2	M270 GR 36 OR 50 (A709)	0'-8 1/4	M111-HDG (A123)	2	-
14a3	1	1/2 X 1 1/2	M270 GR 36 OR 50 (A709)	1'-10 3/4	M111-HDG (A123)	5	-
14a4	1	1/2 X 10 1/16	M270 GR 36 OR 50 (A709)	1'-10 3/4	M111-HDG (A123)	32	-
14b1	1	1/2 X 10 3/16	M270 GR 36 OR 50 (A709)	0'-11	M111-HDG (A123)	16	-
14b2	1	1/2 X 11	M270 GR 36 OR 50 (A709)	1'-11	M111-HDG (A123)	36	-
14b3	1	1/2 X 8 7/16	M270 GR 36 OR 50 (A709)	0'-11	M111-HDG (A123)	13	-
14c1	1	1/2 X 10 3/16	M270 GR 36 OR 50 (A709)	1'-11	M111-HDG (A123)	33	-
14d1	1	L5 X 5 X 1/2	M270 GR 36 (A709 OR A992)	1'-9 7/16		29	-
14f1	1	L4 X 4 X 1/2	M270 GR 36 (A709 OR A992)	1'-9 13/16		23	-
14g1	1	1/2 X 5	M270 GR 36 OR 50 (A709)	0'-10 1/16	M111-HDG (A123)	7	-
14g2	1	L5 X 5 X 1/2	M270 GR 36 (A709 OR A992)	1'-9 3/8		29	A
14g3	1	1/2 X 5	M270 GR 36 OR 50 (A709)	0'-8 5/16	M111-HDG (A123)	6	A
14h1	1	L4 X 4 X 1/2	M270 GR 36 (A709 OR A992)	1'-9 13/16		23	-
15a1	1	1/2 X 1 1/2	M270 GR 36 OR 50 (A709)	0'-10 1/16	M111-HDG (A123)	2	-
15a2	1	1/2 X 1 1/2	M270 GR 36 OR 50 (A709)	0'-8 1/4	M111-HDG (A123)	2	-
15a3	1	1/2 X 1 1/2	M270 GR 36 OR 50 (A709)	1'-10 3/4	M111-HDG (A123)	5	-
15a4	1	1/2 X 10 1/16	M270 GR 36 OR 50 (A709)	1'-10 3/4	M111-HDG (A123)	32	-
15b1	1	1/2 X 10 3/16	M270 GR 36 OR 50 (A709)	0'-11	M111-HDG (A123)	16	-
15b2	1	1/2 X 11	M270 GR 36 OR 50 (A709)	1'-11	M111-HDG (A123)	36	-
15b3	1	1/2 X 8 7/16	M270 GR 36 OR 50 (A709)	0'-11	M111-HDG (A123)	13	-
15c1	1	1/2 X 10 3/16	M270 GR 36 OR 50 (A709)	1'-11	M111-HDG (A123)	33	-
15d1	1	L5 X 5 X 1/2	M270 GR 36 (A709 OR A992)	1'-9 7/16		29	-
15f1	1	L4 X 4 X 1/2	M270 GR 36 (A709 OR A992)	1'-9 13/16		23	-
15g1	1	1/2 X 5	M270 GR 36 OR 50 (A709)	0'-10 1/16	M111-HDG (A123)	7	-
15g2	1	L5 X 5 X 1/2	M270 GR 36 (A709 OR A992)	1'-9 3/8		29	A
15g3	1	1/2 X 5	M270 GR 36 OR 50 (A709)	0'-8 5/16	M111-HDG (A123)	6	-
15h1	1	L4 X 4 X 1/2	M270 GR 36 (A709 OR A992)	1'-9 13/16		23	-
16fb1	6	Ø3/4 X 2 SLOTTED FLAT CTSK HD CAP SCREW	A449		M232-HDG (A153)	< 1	-
16hb1	16	Ø3/4 X 2 1/4 HEX HEAD BOLT	M164 (A325)		M232-HDG (A153)	< 1	-
16hb2	8	Ø3/4 X 2 1/2 HEX HEAD BOLT	M164 (A325)		M232-HDG (A153)	< 1	-
16m1	6	Ø7/8 X 2 1/2 HEX HEAD BOLT	M164 (A325)		(2) ADDED FOR TESTING; M232-HDG (A153); ROCAP	< 1	-
16n1	32	Ø3/4 HEX NUT	M291-A, HEAVY HEX (A563 GR A)		M232-HDG (A153)	< 1	-
16n2	6	Ø7/8 HEX NUT	M291-A OR DH (A563 GR A OR GR DH)		(2) ADDED FOR TESTING; M232-HDG (A153); ROCAP	< 1	-
16p1	12	Ø7/8 FLAT WASHER	M293 (F436)		(4) ADDED FOR TESTING; M232-HDG (A153); ROCAP	< 1	-
16v1	4	Ø3/4 X 1 1/2 HEX HEAD BOLT	M164 (A325)		(2) ADDED FOR TESTING; M232-HDG (A153); ROCAP	< 1	-
16w1	32	Ø3/4 FLAT WASHER	M293 (F436)		M232-HDG (A153)	< 1	-
16ws1	8	Ø7/8 X 8 WELD STUD	M169 (A108)		M111-HDG (A123)	1	-
16C	128	PLATE WASHERS			3"	< 1	-
16c1	128	3/8 X 3	M270 GR 36 OR 50 (A709)	0'-3	M111-HDG (A123)	< 1	-
16D	128	FIELD HARDWARE				< 1	-
16d1	128	Ø1 HEX NUT	M291-DH (A563-DH) HEAVY HEX		M232-HDG (A153)	< 1	-
16F	8	PLATES				10	-
16g1	8	1/2 X 8	M270 GR 36 OR 50 (A709)	0'-9	M111-HDG (A123)	10	-
16G	8	EMBEDS				15	-
16g1	8	1/2 X 8	M270 GR 36 OR 50 (A709)	0'-9	M111-HDG (A123)	10	-
16ws3	32	Ø3/4 X 10 WELD STUD	M169 (A108)		M111-HDG (A123)	1	-
16R	36	FIELD HARDWARE				< 1	-
16r1	36	Ø3/4 X 2 1/4 HEX HEAD BOLT	M164 (A325)		M232-HDG (A153)	< 1	-
16W	36	FIELD HARDWARE				< 1	-
16r1	36	Ø3/4 FLAT WASHER	M293 (F436)		M232-HDG (A153)	< 1	-
16CC	64	ANCHOR RODS			1'-5"	4	-
16cc1	64	Ø1 X 17 THREADED ROD	M314 GR 36 (F1554)		FULL THREAD; M111-HDG (A123)	4	-
		*Approx. Gross Wt. Lbs Per Single Unit			8/26/2015 8:15:45 AM		

REV.	DESCRIPTION	DATE	DET.	CKD.
A	REV. PER APPROVAL COMMENTS	8/25/15	JEB	JAC

D.S. BROWN
A GIBRALTAR INDUSTRIES COMPANY

THE D.S. BROWN COMPANY
300 E. CHERRY STREET
NORTH BALTIMORE, OHIO 45872
419.257.3561
FAX: 419.257.0332
WWW.DSBROWN.COM

LOCATION — TOWN OF WATERBURY
BRIDGE — I-89 EXIT RAMP B OVER STOWE ST
PROJECT — IM 089-2(43)
BRIDGE NO. — 46A
HIGHWAY NO. — INTERSTATE 89
DESIGNER — VERMONT AGENCY OF TRANSPORTATION
CUSTOMER — BECK AND BELLUCCI, INC

ITEM	QUANTITY
-	-
-	-
-	-
-	-
-	-
-	-
-	-
-	-
-	-

DESCRIPTION: EXPANSION JOINT DETAILS
FABRICATION DETAILS

SCALE:	DRAWN BY:	CHECKED BY:	DATE:	
N.T.S.	JAC	JEB	7/15/15	-

PROJECT NUMBER	PRODUCT CODE	RELEASE	SHEET
44596	1043	1	17

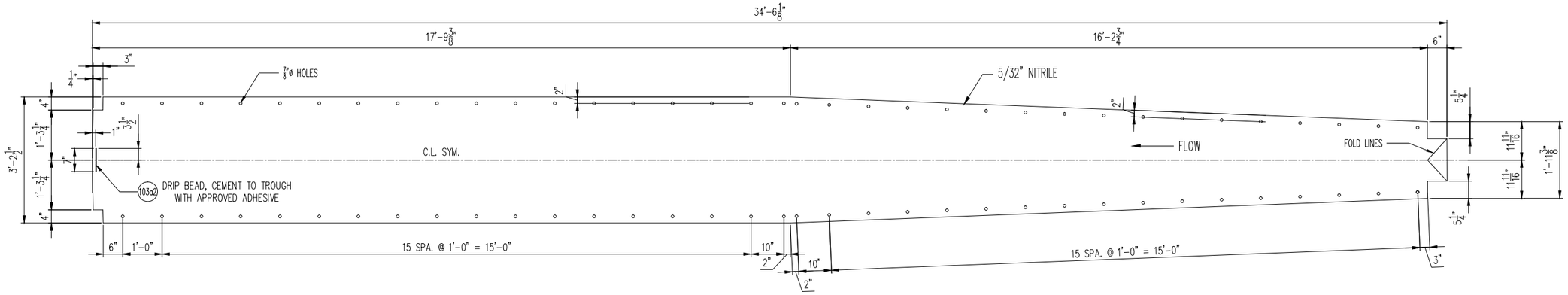

2 TROUGHS – 103A

SHOP NOTE:
INSTALL AND SHIP TROUGH WITH
EXPANSION JOINT ASSEMBLY (16A)&(16B)

THE POLYESTER AND THE RUBBERIZED TROUGH MATERIAL SHALL BE CERTIFIED AS SPECIFIED IN SUBSECTION 707.07 OF THE VTRANS STANDARD SPECIFICATIONS.

THE MATERIAL FOR THE TROUGHS SHALL BE COMPOSED OF PREFORMED FABRIC MATERIAL CONSISTING OF MULTI–PLY POLYESTER OR NYLON FABRIC AND RUBBERIZED TROUGH MATERIAL VULCANIZED TO FORM A LAMINATE WITH THE FOLLOWING PROPERTIES:

MINIMUM THICKNESS, mm (in.) = 4 (0.15625")
MINIMUM COMPOSITE TENSILE STRENGTH OF THE FABRIC REINFORCED BRIDGE TROUGH, N/mm (lb./in.) 210 (1200)
MAXIMUM ELONGATION @ ULTIMATE TENSILE STRENGTH, % = 30
MAXIMUM RESISTANCE TO WATER ABSORPTION, % = 10

MK	QTY	DESCRIPTION	MATERIAL	LENGTH	REMARKS	WT*	REV
103A	2	TROUGH			34'-6 1/8"	100	–
103a1	2	0.156" X 38 1/2	NITRILE	34'-6 1/8	NITRILE – SEE NOTES; PLAIN	100	–
103a2	2	0.250" X 1/4	NITRILE	0'-7	PLAIN	< 1	–
		*Approx. Gross Wt. Lbs Per Single Unit			8/26/2015 8:16:31 AM		

SEE DSB PROJECT 44596–1043 SHEET 16 FOR JOINT ASSEMBLY (16A)&(16B).

REV.	DESCRIPTION	DATE	DET.	CKD.

D.S. BROWN
A GIBRALTAR INDUSTRIES COMPANY
THE D.S. BROWN COMPANY
300 E. CHERRY STREET
NORTH BALTIMORE, OHIO 45872
419.257.3561
FAX: 419.257.0332
WWW.DSBROWN.COM

LOCATION — TOWN OF WATERBURY
BRIDGE — I–89 EXIT RAMP B OVER STOWE ST
PROJECT — IM 089–2(43)
BRIDGE NO. — 46A
HIGHWAY NO. — INTERSTATE 89
DESIGNER — VERMONT AGENCY OF TRANSPORTATION
CUSTOMER — BECK AND BELLUCCI, INC

ITEM	QUANTITY
–	–
–	–
–	–
–	–
–	–
–	–
–	–
–	–
–	–

DESCRIPTION:
EXPANSION JOINT DETAILS
ERECTION DETAILS

SCALE:	DRAWN BY:	CHECKED BY:	DATE:	
N.T.S.	JAC	JEB	7/15/15	–

PROJECT NUMBER	PRODUCT CODE	RELEASE	SHEET
44596	1043	1	103