Production Joint Welding Procedure Specification (D1.5-10)

DSBROWN

Procedure No: A-(MC)GF-01 Date Issued: 9-28-04 Revision No: 03 Rev. Date: 9-5-14

Contractor (Fabricator) D. S. Brown Company Prepared by: Brad Streeter, Quality Assurance Manager

1. Non-Fracture Critical [X] Fracture Critical [ ] WPS Expiration Date: 7-22-19
2. Qualified in accordance with: AWS D1.5- 2010 (5.12.1)
   Referenced PQR No(s). PQR-(MC)GMAW-01(14) __ , __ , ____
   Referenced FWST No(s). PQR-(MC)GMAW-FWST-01A(14) , PQR-(MC)GMAW-FWST-01B(14) , __ , __
3. Material specification(s) ASTM A709 Gr. 36, 50, 50W
4. Material Thickness (es) Unlimited
5. Welding process GMAW
6. Manual [ ] , machine [X] , or semiautomatic [X]
7. Position(s) of welding 1F, 2F
8. Filler metal specification AWS A5.18
9. Filler metal class and brand name E70C-6M Corex Metal-Core Maxim
10. Flux class & brand N/A , Type N/A
11. Shielding gas 75% Ar / 25% CO2 Flow rate 45 CFH
12. Single pass [X] Or multiple pass [X]
13. Single arc [X] Or multiple arc [ ]
14. Welding Current DCEP
15. Polarity Reverse
16. Welding progression stringers
17. Root treatment Clean to bright sound metal or per AWS D1.5 (3.2.1 & 3.11)
18. Postheat treatment N/A
19. Calculated Heat Input (KJ/In) Min 30.1 Kj/in Max 50.15 Kj/in
20. Electrode extension (electrical stickout) 3/4"

For DOT Approval

VTrans Received
CK'D ____ OK'd BY JWC
JAN 09 2015
Resubmit ____ APPROVED ✓
BY ____ DATE 1/13/15

Weld size (In)	Pass No(s).	Electrode Size (In)	Welding Process Variables AMPS/WFS*	Welding Process Variables VOLTS	Travel Speed (IPM)
**1/4"	1	.052"	270-319	27-31	11.85-13.9
5/16"	1	.052"	270-319	27-31	11.85-13.9
3/8"	1-3	.052"	270-319	27-31	11.85-13.9
7/16"	2-4	.052"	270-319	27-31	11.85-13.9
1/2"	4-6	.052"	270-319	27-31	11.85-13.9
5/8"	5-7	.052"	270-319	27-31	11.85-13.9
3/4"	6-8	.052"	270-319	27-31	11.85-13.9

Joint Detail (Fillet)
Show all dimensions, weld sizes, passes, and AWS symbols

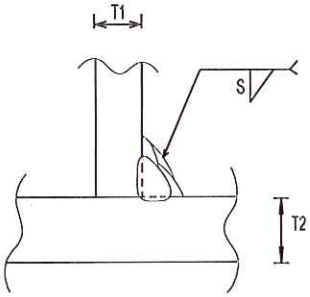

T1 = Varies
T2 = Varies
S = Weld Size

**** T1 & T2 equal to or less than 3/4" for 1/4" welds.**

* Wire feed speed may be used along with amperage (include chart)

Prepared By: [signature] DSB QA Manager

Project: I-89 OVER STOWE ST & THATCHER BROOK

DSB Job: 44596-1031

Preheat and Interpass Temperature Chart

Base Metal Thickness range	Minimum Preheat (°F)	Max Preheat & Interpass (°F)
≤ 3/4"	50°F	345°F
>3/4" to ≤1.5"	70°F	345°F
>1.5" to ≤2.5"	150°F	345°F
>2.5"	225°F	345°F

Note: When this procedure is used for A709Gr50W materials, it shall be limited to 5/16" single pass or material be coated.

✓

DSBROWN

Production Joint Welding Procedure Specification (D1.5-10)

Procedure No: A-(MC)GSB-01 Date Issued: 9-28-04 Revision No: 02 Rev. Date: 10-10-14

Contractor (Fabricator) D. S. Brown Company Prepared by: Brad Streeter, Quality Assurance Manager

1. Non-Fracture Critical [X] Fracture Critical [ ] WPS Expiration Date: 7-22-19
2. Qualified in accordance with: AWS D1.5- 2010 (5.12.1)
   Referenced PQR No(s). PQR-(MC)GMAW-01(14) __ , __ , ____
   Referenced FWST No(s). PQR-(MC)GMAW-FWST-01A(14) , PQR-(MC)GMAW-FWST-01B(14) , __ , __
3. Material specification(s) ASTM A709 Gr. 36, 50, 50W
4. Material Thickness (es) Unlimited
5. Welding process GMAW
6. Manual [ ] , machine [X] , or semiautomatic [X]
7. Position(s) of welding 1G, 2G, 1F, 2F
8. Filler metal specification AWS A5.18
9. Filler metal class and brand name E70C-6M Corex Metal-Core Maxim
10. Flux class & brand N/A , Type N/A
11. Shielding gas 75% Ar / 25% CO2 Flow rate 45 CFH
12. Single pass [X] Or multiple pass [X]
13. Single arc [X] Or multiple arc [ ]
14. Welding Current DCEP
15. Polarity Reverse
16. Welding progression stringers
17. Root treatment Clean to bright sound metal or per AWS D1.5 (3.2.1 & 3.11)
18. Postheat treatment N/A
19. Calculated Heat Input (KJ/In) Min 34.77 Kj/in Max 50.07 Kj/in
20. Electrode extension (electrical stickout) 3/4"

For DOT Approval

VTrans Received CK'D ____ OK'd BY JWC
JAN 09 2015
Resubmit ____ APPROVED ✓ BY ____ DATE 1/13/15

Weld size (In) (E)&(S)	Pass No(s).	Electrode Size (In)	Welding Process Variables AMPS/WFS*	VOLTS	Travel Speed (IPM)
1/4"	1	.052"	270-319	27-31	11.85-13.9
5/16"	1	.052"	270-319	27-31	11.85-13.9
3/8"	1-2	.052"	270-319	27-31	11.85-13.9
1/2"	3-4	.052"	270-319	27-31	11.85-13.9
5/8"	4-6	.052"	270-319	27-31	11.85-13.9
3/4"	5-7	.052"	270-319	27-31	11.85-13.9
7/8"	6-9	.052"	270-319	27-31	11.85-13.9
1"	7-10	.052"	270-319	27-31	11.85-13.9

Joint Detail (TC-P4-GF)
Show all dimensions, weld sizes, passes, and AWS symbols

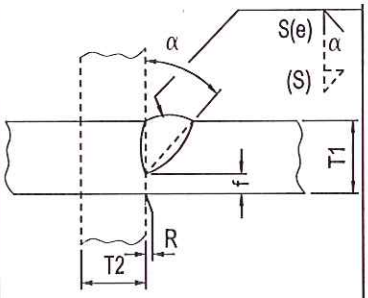

T1 = ¼" min.
T2 = Varies
(E) = S-1/8"
f = 1/8" min.
R = 0
α = 45°
S = size groove
(S) = size of reinforcing fillet(if required) not to exceed ¼" in corner & T jts.

For Butt Joints see AWS 2.14

* Wire feed speed may be used along with amperage (include chart)

Prepared By: [signature] DSB QA Manager

Project: I-89 OVER STOWE ST & THATCHER BROOK

DSB Job: 44596-1031

Preheat and Interpass Temperature Chart

Base Metal Thickness range	Minimum Preheat (°F)	Max Preheat & Interpass (°F)
≤ 3/4"	50°F	450°F
>3/4" to ≤1.5"	70°F	450°F
>1.5" to ≤2.5"	150°F	450°F
>2.5"	225°F	450°F

Note: When this procedure is used for A709Gr50W materials, it shall be limited to 5/16" single pass or material be coated.

Production Joint Welding Procedure Specification (D1.5-08)

DSBROWN

Procedure No: A-SM-STUD-REP-01 Date Issued: 8/6/04 Revision No: 03 Rev. Date: 11-18-13

Contractor (Fabricator) D. S. Brown Company Prepared by: Brad Streeter, Quality Assurance Manager

1. Non-Fracture Critical [X] Fracture Critical [ ] WPS Expiration Date: N/A
2. Qualified in accordance with: AWS D1.5- 2008
   Referenced PQR No(s). N/A __ , __ , ____
   Referenced FWST No(s). N/A , N/A , __ , ____
3. Material specification(s) ASTM A709 Gr. 36, 50, 50W, A108 Stud
4. Material Thickness (es) Unlimited
5. Welding process SMAW
6. Manual [X] , machine [ ] , or semiautomatic [ ]
7. Position(s) of welding 1F, 2F
8. Filler metal specification AWS A5.1
9. Filler metal class and brand name LINCOLN JET LH-78-MR E7018
10. Flux class & brand N/A , Type N/A
11. Shielding gas N/A Flow rate N/A
12. Single pass [X] Or multiple pass [X]
13. Single arc [X] Or multiple arc [ ]
14. Welding Current DCEP
15. Polarity Reverse
16. Welding progression stringers
17. Root treatment Clean to bright sound metal or per AWS D1.5 (3.2.1 & 3.11)
18. Postheat treatment N/A
19. Calculated Heat Input (KJ/In) Min 20.28 Kj/In Max 30.6 Kj/In
20. Electrode extension (electrical stickout) Varies

For DOT Approval

VTrans Received OK'd BY JWC
CK'D ____
JAN 09 2015
APPROVED ✓
DATE 1/13/15
Resubmit BY ____

Weld size (In)	Pass No(s).	Electrode Size (In)	Welding Process Variables AMPS/WFS*	Welding Process Variables VOLTS	Travel Speed (IPM)
1/4"	1	5/32"	130-170	26-30	10
5/16"	1	5/32"	130-170	26-30	10
3/8"	2-3	5/32"	130-170	26-30	10

As per AWS D1.5 Sec. 7 (Table 7.2)

Stud Diameter	Minimum Fillet
≤ 3/8"	1/4"
3/8" ≤ 1"	5/16"
> 1"	3/8"

Joint Detail (Fillet)
Show all dimensions, weld sizes, passes, and AWS symbols

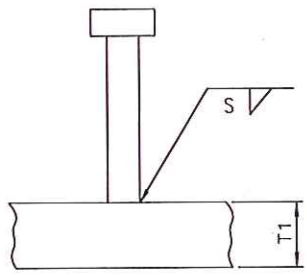

T1 = Varies
Stud = Varies
S = Weld Size

Weld must cover and extend beyond missing flash at least 3/8" in each direction

(see AWS D1.5 Table 7.2 for required weld size)

Prepared By: [signature] DSB QA Manager

Project: I-89 OVER STOWE ST & THATCHER BROOK

DSB Job: 44596-1031

Preheat and Interpass Temperature Chart

Base Metal Thickness range	Minimum Preheat (°F)	Max Preheat & Interpass (°F)
≤ 3/4"	50°F	450°F
>3/4" to ≤1.5"	70°F	450°F
>1.5" to ≤2.5"	150°F	450°F
>2.5"	225°F	450°F

Note: When this procedure is used for A709Gr50W materials, it shall be limited to 5/16" single pass or material be coated.

Production Joint Welding Procedure Specification (D1.5-10)

DSBROWN

Procedure No: **B-FF-01** Date Issued: 3-28-08 Revision No: 2 Rev. Date: 4-26-13

Contractor (Fabricator) D. S. Brown Company Prepared by: Brad Streeter, Quality Assurance Manager

1. Non-Fracture Critical [X] Fracture Critical [ ] WPS Expiration Date: 4-12-18
2. Qualified in accordance with: AWS D1.5- 2010 (5.12.1)
   Referenced PQR No(s). PQR-FCAW-01(13)A __ , __ , ____
   Referenced FWST No(s). FCAW-FWST-01A , FCAW-FWST-01B , __ , ____
3. Material specification(s) ASTM A709 Gr. 36, 50, 50W
4. Material Thickness (es) Unlimited
5. Welding process FCAW
6. Manual [ ] , machine [ ] , or semiautomatic [X]
7. Position(s) of welding 1F, 2F
8. Filler metal specification AWS A5.20
9. Filler metal class and brand name E71T-1CH8 (UltraCore71C)
10. Flux class & brand N/A , Type N/A
11. Shielding gas 100% CO2 Flow rate 50 CFH
12. Single pass [X] Or multiple pass [X]
13. Single arc [X] Or multiple arc [ ]
14. Welding Current DCEP
15. Polarity Reverse
16. Welding progression stringers
17. Root treatment Clean to bright sound metal or per AWS D1.5 (3.2.1 & 3.11)
18. Postheat treatment N/A
19. Calculated Heat Input (KJ/In) Min 26.7 Kj/in Max 44.3 Kj/in
20. Electrode extension (electrical stickout) 3/4"

For DOT Approval

VTrans Received OK'd BY JWC
CK'D
JAN 09 2015
APPROVED ✓
DATE 1/13/15
Resubmit BY

Weld size (In)	Pass No(s).	Electrode Size (In)	Welding Process Variables AMPS/WFS*	VOLTS	Travel Speed (IPM)
**1/4"	1	1/16"	260-305	25-27.6	11.4-14.6
5/16"	1	1/16"	260-305	25-27.6	11.4-14.6
3/8"	2-3	1/16"	260-305	25-27.6	11.4-14.6
7/16"	3-5	1/16"	260-305	25-27.6	11.4-14.6
1/2"	4-6	1/16"	260-305	25-27.6	11.4-14.6
5/8"	5-7	1/16"	260-305	25-27.6	11.4-14.6
3/4"	6-8	1/16"	260-305	25-27.6	11.4-14.6

Joint Detail (Fillet)

Show all dimensions, weld sizes, passes, and AWS symbols

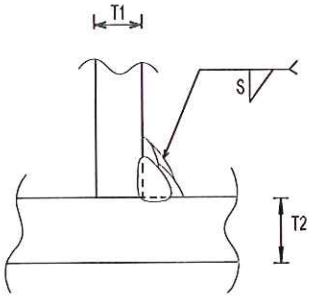

T1 = Varies
T2 = Varies
S = Weld Size

**** T1 & T2 equal to or less than 3/4" for 1/4" welds.**

* Wire feed speed may be used along with amperage (include chart)

Prepared By: _____ DSB QA Manager

Project: I-89 OVER STOWE ST & THATCHER BROOK

DSB Job: 44596-1031

Preheat and Interpass Temperature Chart

Base Metal Thickness range	Minimum Preheat (°F)	Max Preheat & Interpass (°F)
≤ 3/4"	50°F	450°F
>3/4" to ≤1.5"	70°F	450°F
>1.5" to ≤2.5"	150°F	450°F
>2.5"	225°F	450°F

Note: When this procedure is used for A709Gr50W materials, it shall be limited to 5/16" single pass or material be coated.

Production Joint Welding Procedure Specification (D1.5-10)

DSBROWN

Procedure No: **B-FF-STUD-REP-01** Date Issued: 3-28-08 Revision No: 01 Rev. Date: 4/28/13

Contractor (Fabricator) D. S. Brown Company Prepared by: Brad Streeter, Quality Assurance Manager

1. Non-Fracture Critical [X] Fracture Critical [ ] WPS Expiration Date: 4/12/18
2. Qualified in accordance with: AWS D1.5- 2010 (5.12.1)
   Referenced PQR No(s). PQR-FCAW-01-(13)A __ , __ , ____
   Referenced FWST No(s). FCAW-FWST-01A , FCAW-FWST-01B , __ , ____
3. Material specification(s) ASTM A709 Gr. 36, 50, 50W, A500B to A108 Stud
4. Material Thickness (es) Unlimited
5. Welding process FCAW
6. Manual [ ] , machine [ ] , or semiautomatic [X]
7. Position(s) of welding 2F
8. Filler metal specification AWS A5.20
9. Filler metal class and brand name E71T-1CH8 (UltraCore71C)
10. Flux class & brand N/A , Type N/A
11. Shielding gas 100% CO2 Flow rate 50 CFH
12. Single pass [X] Or multiple pass [X]
13. Single arc [X] Or multiple arc [ ]
14. Welding Current DCEP
15. Polarity Reverse
16. Welding progression stringers
17. Root treatment Clean to bright sound metal and per AWS D1.5 (3.2.1 & 3.11)
18. Postheat treatment N/A
19. Calculated Heat Input (KJ/In) Min 26.7 Kj/in Max 44.3 Kj/in
20. Electrode extension (electrical stickout) 3/4"

For DOT Approval

VTrans Received OK'd BY JWC
CK'D
JAN 09 2015
APPROVED ✓ DATE 1/13/15
Resubmit BY

Weld size (In)	Pass No(s).	Electrode Size (In)	Welding Process Variables AMPS	Welding Process Variables VOLTS	Travel Speed (IPM)
**1/4"	1	1/16"	260-305	25-27.6	11.4-14.6
5/16"	1	1/16"	260-305	25-27.6	11.4-14.6
3/8"	2-3	1/16"	260-305	25-27.6	11.4-14.6

Table 7.2

STUD DIAMETER	MIN. SIZE FILLET
3/8"(13MM)	1/4(6MM)
½", 5/8,3/4,7/8(13,16,19,22MM)	5/16(8MM)
1"(25MM)	3/8(10MM)

PROCEDURE:
1) REPAIR WELDMENT SHALL BE OF THE SIZE LISTED BELOW AND EXTEND AT LEAST 3/8" (9MM) BEYOND THE END OF EACH DISCONTINUITY BEING REPAIRED.

Joint Detail (Fillet)
Show all dimensions, weld sizes, passes, and AWS symbols

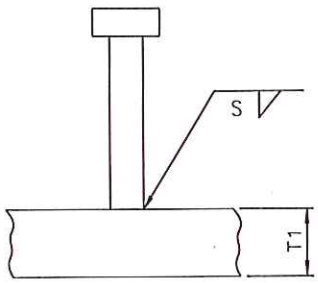

T_1 =VARIES
S =VARIES PER TABLE 7.2
(AS SHOWN LEFT OF PAGE).

APPLICATION:
REPAIR OF STUD WELDMENTS, WHICH DO NOT EXHIBIT A FULL 360° FLASH

**** T1 & T2 equal to or less than 3/4" for 1/4" welds**

Prepared By: [signature] DSB QA Manager

Project: I-89 OVER STOWE ST & THATCHER BROOK

DSB Job: 44596-1031

Preheat and Interpass Temperature Chart

Base Metal Thickness range	Minimum Preheat (°F)	Max Preheat & Interpass (°F)
≤ 3/4"	50°F	450°F
>3/4" to ≤1.5"	70°F	450°F
>1.5" to ≤2.5"	150°F	450°F
>2.5"	225°F	450°F

Note: When this procedure is used for A709Gr50W materials, it shall be limited to 5/16" single pass or material be coated.

Production Joint Welding Procedure Specification (D1.5-10)

DSBROWN

Procedure No: **B-FSB-01** Date Issued: 3-28-08 Revision No: 02 Rev. Date: 4/28/2013

Contractor (Fabricator) D. S. Brown Company Prepared by: Brad Streeter, Quality Assurance Manager

1. Non-Fracture Critical [X] Fracture Critical [ ] WPS Expiration Date: 4/12/18
2. Qualified in accordance with: AWS D1.5- 2010 (5.12.1)
   Referenced PQR No(s). PQR-FCAW-01-(13)A __ , __ , ____
   Referenced FWST No(s). FCAW-FWST-01A , FCAW-FWST-01B , __ , __
3. Material specification(s) ASTM A709 Gr. 36, 50, 50W
4. Material Thickness (es) Unlimited
5. Welding process FCAW
6. Manual [ ] , machine [ ] , or semiautomatic [X]
7. Position(s) of welding 1G, 2G,(1F,2F)
8. Filler metal specification AWS A5.20
9. Filler metal class and brand name E71T-1CH8 (UltraCore71C)
10. Flux class & brand N/A , Type N/A
11. Shielding gas 100% CO2 Flow rate 50 CFH
12. Single pass [X] Or multiple pass [X]
13. Single arc [X] Or multiple arc [ ]
14. Welding Current DCEP
15. Polarity Reverse
16. Welding progression Stringers
17. Root treatment Clean to bright sound metal or per AWS D1.5 (3.2.1 & 3.11)
18. Postheat treatment N/A
19. Calculated Heat Input (KJ/In) Min 26.7 Kj/in Max 44.3 Kj/in
20. Electrode extension (electrical stickout) 3/4"

For DOT Approval

VTrans Received OK'd BY JWC
OK'd JAN 09 2015
Resubmit BY ____ APPROVED DATE 1/13/15

Weld size (In) (E)&(S)	Pass No(s).	Electrode Size (In)	Welding Process Variables AMPS/WFS*	Welding Process Variables VOLTS	Travel Speed (IPM)
**1/4"	1	1/16"	260-305	25-27.6	11.4-14.6
5/16"	1	1/16"	260-305	25-27.6	11.4-14.6
3/8"	2-3	1/16"	260-305	25-27.6	11.4-14.6
1/2"	3-4	1/16"	260-305	25-27.6	11.4-14.6
5/8"	4-6	1/16"	260-305	25-27.6	11.4-14.6
3/4"	5-7	1/16"	260-305	25-27.6	11.4-14.6
7/8"	6-8	1/16"	260-305	25-27.6	11.4-14.6
1"	7-9	1/16"	260-305	25-27.6	11.4-14.6

Joint Detail (TC-P4-GF)
Show all dimensions, weld sizes, passes, and AWS symbols

**** T1 & T2 equal to or less than 3/4" for 1/4" welds**

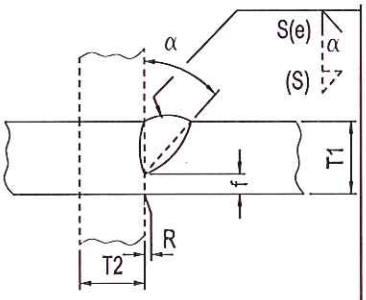

T1 = ¼" min.
T2 = Varies
(E) = S-1/8"
f = 1/8" min.
R = 0
α = 45°
S = size groove
(S) = size of reinforcing fillet(if required) not to exceed ¼" in corner & T jts.

For Butt Joints see AWS 2.14

* Wire feed speed may be used along with amperage (include chart)

Prepared By: [signature] DSB QA Manager

Project: I-89 OVER STOWE ST & THATCHER BROOK

DSB Job: 44596-1031

Preheat and Interpass Temperature Chart

Base Metal Thickness range	Minimum Preheat (°F)	Max Preheat & Interpass (°F)
≤ 3/4"	50°F	450°F
>3/4" to ≤1.5"	70°F	450°F
>1.5" to ≤2.5"	150°F	450°F
>2.5"	225°F	450°F

Note: When this procedure is used for A709Gr50W materials, it shall be limited to 5/16" single pass or material be coated.