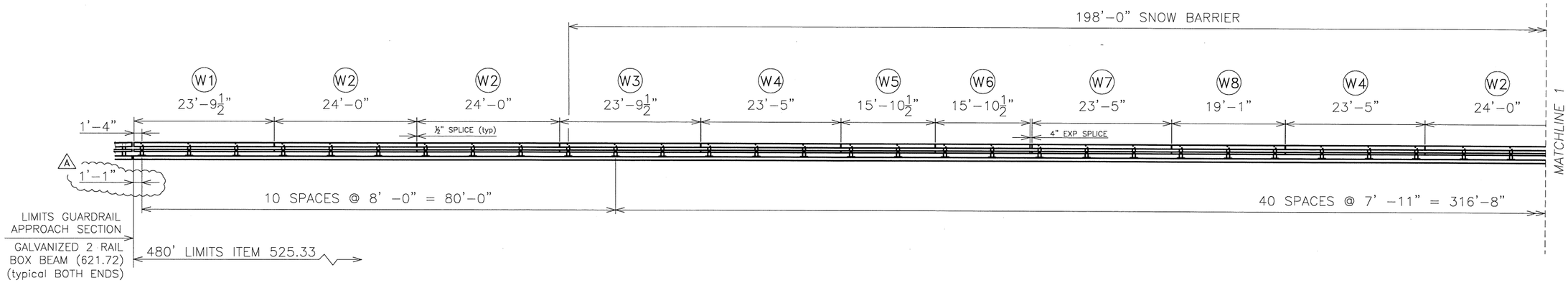

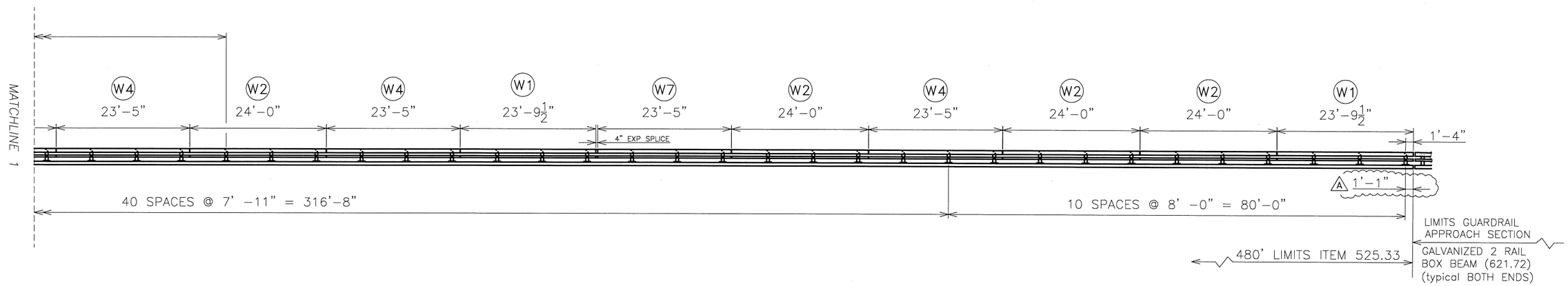

BILL OF MATERIAL

ITEM 525.33 = 960 LF

Qty	mk	Description	Spec.
122		BRIDGE RAILING POST W6 x 25 x 2'-2.375" OAH WITH 1 x 10 x 14 BASE PLATE (GLV)	A709 gr 50
36		SPLICE TUBE (FOR 8X4 RAIL) HSS 7 x 3 x 3/8 x 1'-8.000" OAL w/ TAPPED HOLES & 2 WELDED NUTS (GLV)	A500 gr B
36		SPLICE TUBE (FOR 4X4 RAIL) HSS 3 x 3 x 5/16 x 1'-8.000" OAL w/ TAPPED HOLES & 2 WELDED NUTS (GLV)	A500 gr B
8		EXP SPLICE (FOR 8X4 RAIL) HSS 7 x 3 x 3/8 x 1'-11.750" OAL w/ TAPPED HOLES & 2 WELDED NUTS (GLV)	A500 gr B
8		EXP SPLICE (FOR 4X4 RAIL) HSS 3 x 3 x 5/16 x 1'-11.750" OAL w/ TAPPED HOLES & 2 WELDED NUTS (GLV)	A500 gr B
6	**W1**	RAIL TUBE HSS 8 x 4 x 5/16 x 23' -9.500" OAL FIX splice 1 end, EXP splice 1 end (GLV)	A500 gr B
14	**W2**	RAIL TUBE HSS 8 x 4 x 5/16 x 24' -0.000" OAL FIX splice both ends (GLV)	A500 gr B
2	**W3**	RAIL TUBE HSS 8 x 4 x 5/16 x 23' -9.500" OAL FIX splice both ends (GLV)	A500 gr B
10	**W4**	RAIL TUBE HSS 8 x 4 x 5/16 x 23' -5.000" OAL FIX splice both ends (GLV)	A500 gr B
2	**W5**	RAIL TUBE HSS 8 x 4 x 5/16 x 15' -10.500" OAL FIX splice both ends (GLV)	A500 gr B
2	**W6**	RAIL TUBE HSS 8 x 4 x 5/16 x 15' -10.500" OAL FIX splice 1 end, EXP splice 1 end (GLV)	A500 gr B
4	**W7**	RAIL TUBE HSS 8 x 4 x 5/16 x 23' -5.000" OAL FIX splice 1 end, EXP splice 1 end (GLV)	A500 gr B
2	**W8**	RAIL TUBE HSS 8 x 4 x 5/16 x 19' -1.000" OAL FIX splice both ends (GLV)	A500 gr B
6	**W1**	RAIL TUBE HSS 4 x 4 x 1/4 x 23' -9.500" OAL FIX splice 1 end, EXP splice 1 end (GLV)	A500 gr B
14	**W2**	RAIL TUBE HSS 4 x 4 x 1/4 x 24' -0.000" OAL FIX splice both ends (GLV)	A500 gr B
2	**W3**	RAIL TUBE HSS 4 x 4 x 1/4 x 23' -9.500" OAL FIX splice both ends (GLV)	A500 gr B
10	**W4**	RAIL TUBE HSS 4 x 4 x 1/4 x 23 -5.000" OAL FIX splice both ends (GLV)	A500 gr B
2	**W5**	RAIL TUBE HSS 4 x 4 x 1/4 x 15' -10.500" OAL FIX splice both ends (GLV)	A500 gr B
2	**W6**	RAIL TUBE HSS 4 x 4 x 1/4 x 15' -10.500" OAL FIX splice 1 end, EXP splice 1 end (GLV)	A500 gr B
4	**W7**	RAIL TUBE HSS 4 x 4 x 1/4 x 23' -5.000" OAL FIX splice 1 end, EXP splice 1 end (GLV)	A500 gr B
2	**W8**	RAIL TUBE HSS 4 x 4 x 1/4 x 19' -11.000" OAL FIX splice both ends (GLV)	A500 gr B
122		ANCHOR SPACER PLATE PL 0.375 x 13.000 x 9.375	A709 gr 36
488		ANCHOR STUD DBL END PART THREAD - 1" DIA x 12.000 w/ 2.250" THD EACH END (GLV)	A449
976		HEAVY HEX NUT 1" (GLV)	A563 DH
488		ROUND WASHER (SAE) - 1" DIA SMALL (GLV)	F436
488		JAM NUT 1" (GALV)	A563 DH
488		ROUND HEAD POST BOLT slot or wrench head - no shoulder 3/4" DIA x 6" LG. FULL BODY (GLV)	A449 / A325
488		LOCK NUT 3/4" (GLV)	A563 DH
488		ROUND WASHER (SAE) 3/4" (GLV)	F436
352		HEX HEAD BOLT 5/8" DIA x 1.75" LG. (GLV)	A325
352		ROUND WASHER (SAE) 5/8" (GLV)	F436
64		SPACER PIPE - GALVANIZED 3/4" SCH. 40 x 1/2" LONG (GLV)	A53 gr B
122		BEARING PAD 0.125" THICK x 10.000 x 14.000 (NEOPRENE 80 duro +/-10)	aashto M251

B.I.N. BR46A

WEST SIDE RAILING ELEVATION

LOOKING AT FACE OF RAIL, FACING WEST,
FROM CENTERLINE OF ROAD

No.	Remarks	Date
A	review corrections	2/30/16
0	initial submittal	03-11-16

REVISIONS – APPLIES TO SET

Vermont Agency of Transportation
RECEIVED
CK'D BY Stantec OK'D BY D Bonneau
March 31, 2016
RESUBMIT No Approved
BY D Bonneau DATE 04/11/16

HIGHWAY SAFETY CORP
GLASTONBURY, CT
860-633-9445

ITEM 525.33 2-RAIL BRIDGERAIL GALVANIZED
I-89 OVER STOWE ST. & THATCHER BROOK
B.I.N. BR46A P.I.N. IM 089-2(43)
TOWN OF WATERBURY, WASHINGTON COUNTY

AISC CERTIFIED FABRICATOR

GENERAL CONTRACTOR
SUB CONTRACTOR LAFAYETTE
HSC JOB NO. 2077
SHEET NO. 1 of 4

DRAWN	CHECKED	DATE	SCALE	SIZE
MKT		02-24-16	NONE	D

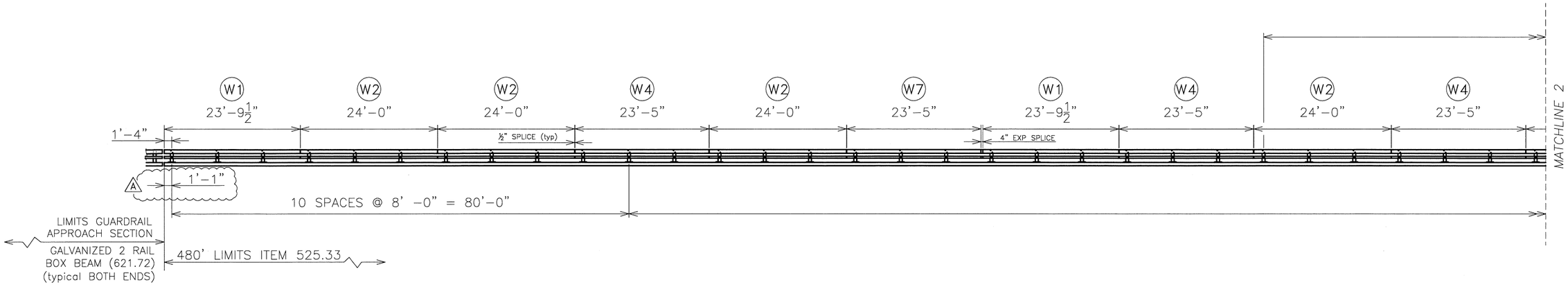

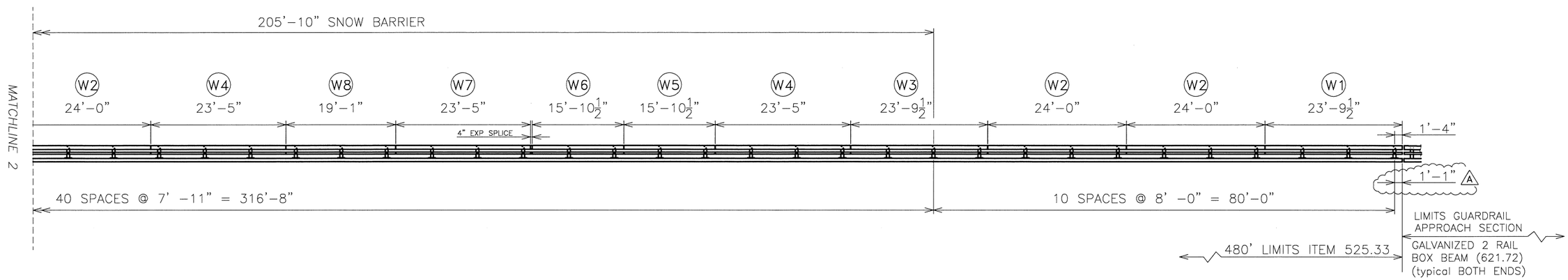

B.I.N. BR46A

EAST SIDE RAILING ELEVATION

LOOKING AT FACE OF RAIL, FACING EAST, FROM CENTERLINE OF ROAD

Vermont Agency of Transportation
RECEIVED
CK'D BY Stantec OK'D BY D Bonneau
March 31, 2016
RESUBMIT No Approved
BY D Bonneau DATE 04/11/16

HIGHWAY SAFETY CORP
GLASTONBURY, CT
860-633-9445

ITEM 525.33 2-RAIL BRIDGERAIL GALVANIZED
I-89 OVER STOWE ST. & THATCHER BROOK
B.I.N. BR46A P.I.N. IM 089-2(43)
TOWN OF WATERBURY, WASHINGTON COUNTY

AISC CERTIFIED FABRICATOR

GENERAL CONTRACTOR
SUB CONTRACTOR LAFAYETTE

HSC JOB NO. 2077
SHEET NO. 2 of 4

DRAWN	CHECKED	DATE	SCALE	SIZE
MKT		02-24-16	NONE	D

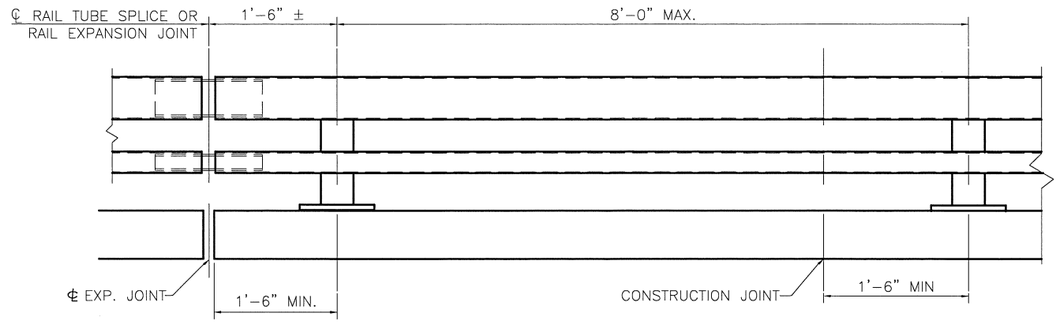

BRIDGE RAILING ELEVATION

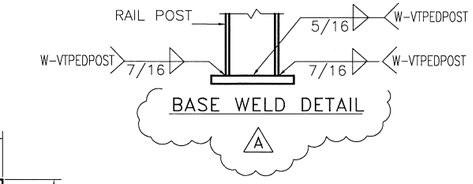

BASE WELD DETAIL

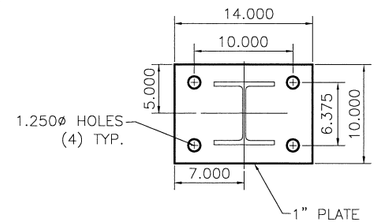

POST AND BASE PLATE

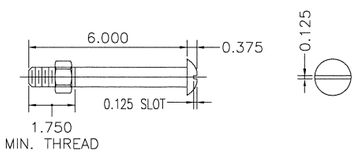

3/4" DIA. A449
ROUND HEAD BOLT

(WITH WASHER AND PREVAILING TORQUE TYPE LOCK NUT)
(SEE NOTE #8)
ONLY FULL DIAMETER BODY BOLTS WILL BE ALLOWED.

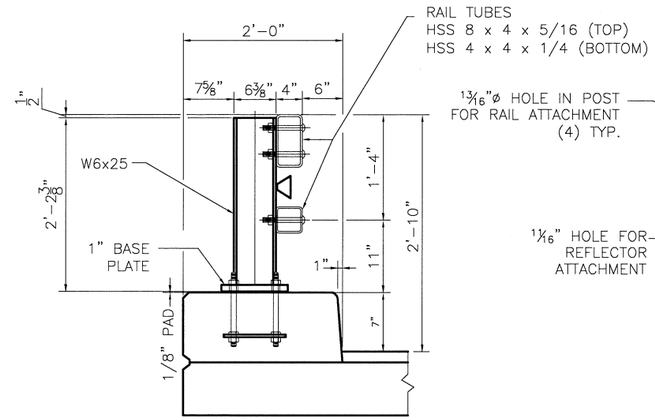

TYPICAL SECTION

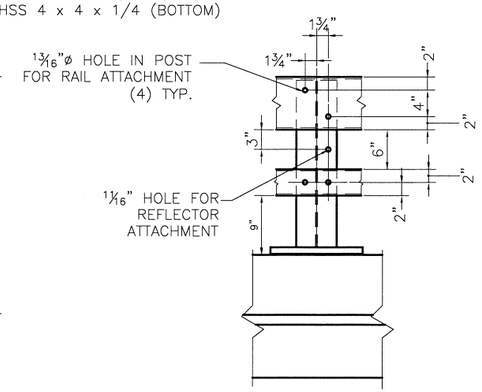

ELEVATION

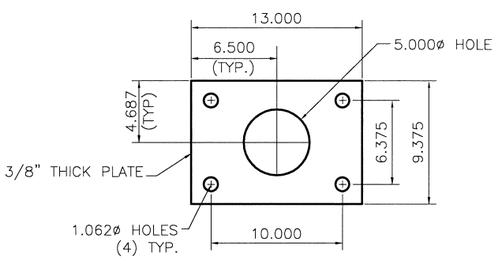

ANCHOR PLATE

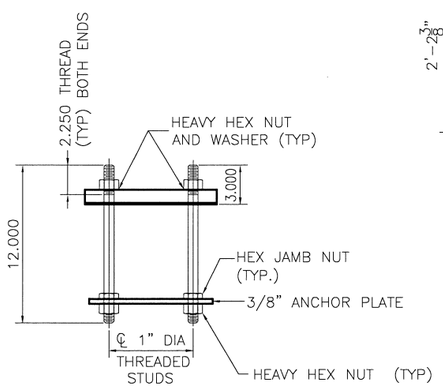

RAIL POST ANCHORAGE

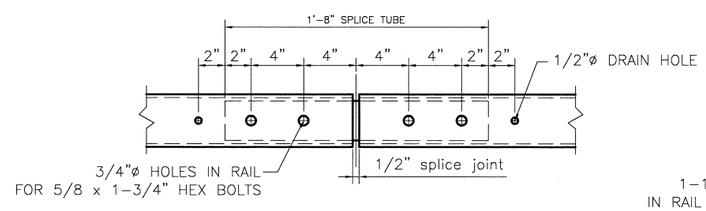

FIXED SPLICE JOINT DETAIL
BOTTOM VIEW

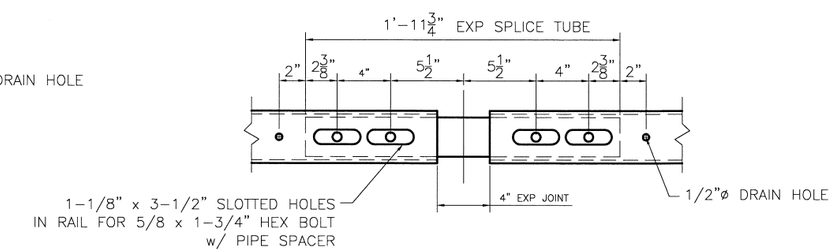

EXPANSION SPLICE DETAIL
BOTTOM VIEW

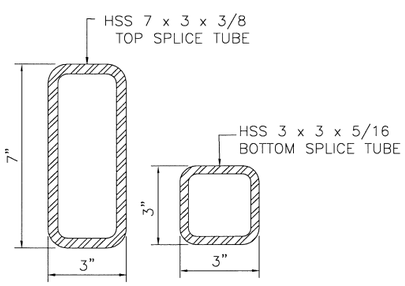

RAIL TUBE SPLICE SECTION

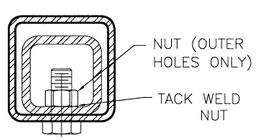

5/8"ø TAPPED HOLE IN SPLICE TUBE &
3/4"ø HOLE IN RAIL TUBE FOR BOLT &
PLAIN HARDENED WASHER

FIXED SPLICE JOINT SECTION

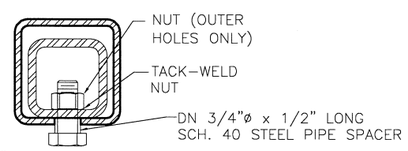

5/8"ø TAPPED HOLE IN SPLICE TUBE
AND 1 1/8" x 'C' SLOT IN RAIL TUBE FOR
BOLT AND PLAIN HARDENED WASHER

EXPANSION JOINT SECTION

NOTES:

1. ALL WORK AND MATERIALS SHALL CONFORM TO SECTION 525.

2. PRIOR TO GALVANIZING, ALL EXPOSED CUT OR SHEARED EDGES SHALL BE ROUNDED TO A 1/16" RADIUS AND BE FREE OF BURRS.

3. ALL POSTS SHALL BE SET NORMAL TO GRADE.

4. SECTIONS OF RAIL TUBE SHALL BE ATTACHED TO A MINIMUM OF TWO (2) RAIL POSTS AND PREFERABLY TO AT LEAST FOUR (4) POSTS.

5. RAIL TUBE EXPANSION JOINT SHALL BE PROVIDED IN ANY RAIL BAY SPANNING THE END OF AN INTEGRAL ABUTMENT BRIDGE AND AT ALL SUPERSTRUCTURE EXPANSION JOINTS. EXPANSION JOINT WIDTH SHALL BE 4" AT 45°F AND WILL BE ADJUSTED IN THE FIELD BY THE ENGINEER FOR OTHER TEMPERATURES.

6. HOLES IN RAILS FOR RAIL TUBE ATTACHMENT SHALL BE FIELD-DRILLED. HOLES SHALL BE COATED WITH AND APPROVED ZINC-RICH PAINT DURING INSTALLATION.

7. RAIL POST ANCHORING NUTS SHALL BE TIGHTENED TO A SNUG FIT AND GIVEN AN ADDITIONAL ONE-EIGHTH TURN.

8. RAIL TUBES SHALL BE ATTACHED USING 3/4" FULL DIAMETER BODY ASTM A449 ROUND HEAD BOLTS INSERTED THROUGH THE FACE OF THE TUBE. HOLES IN POSTS SHALL BE 1/16" LARGER THAN THE BOLT SIZE.

9. ANY BENDING OR CURVING OF RAIL SHALL BE DONE IN A FABRICATION PLANT IN ACCORDANCE WITH SUBMITTED PROCEDURES.

10. THE MINIMUM DISTANCE FROM A POST TO AN EXPANSION JOINT SHALL BE SUCH TO MAINTAIN MINIMUM EDGE DISTANCE OF 5" FROM ANY ANCHOR STUD TO THE END OF THE SLAB, OR TO THE EXPANSION JOINT RECESS POUR, IF ONE IS USED.

11. A DELINEATOR (SEE VAOT STANDARD DRAWING G-1 FOR DETAILS) SHALL BE INSTALLED AT NEAREST POST TO 30 FT SPACING. WHITE IS TO BE INSTALLED ON THE DRIVER'S RIGHT. FOR ONE WAY BRIDGES, YELLOW IS TO BE INSTALLED ON THE DRIVER'S LEFT. PAYMENT SHALL BE INCIDENTAL TO OTHER ITEMS.

12. THIS RAILING MEETS THE REQURIEMENTS FOR A TL-4 SERVICE LEVEL.

MATERIALS
RAIL TUBES.....ASTM A500 GRADE B OR ASTM A501
RAIL POSTS AND BASE PLATES.....ASTM A709/A709M, GRADE 50
ALL OTHER SHAPES AND PLATES.....ASTM A709/A709M, GARDE 36
ANCHOR STUDS.....ASTM A449
ALL OTHER BOLTS (UNLESS NOTED).....AASHTO M164, TYPE1

NUTS FOR AASHTO M164 BOLTS AND FOR ANCHOR STUDS SHALL COMPLY WITH AASTHO M291 (ASTM A563).

WASHERS SHALL COMPLY WITH AASHTO M293 (ASTM F436) SPECIFCATIONS.

1/8" PAD SHALL COMPLY WITH STANDARD SPECIFICATION SUBSECTION 731.01 OR 731.02.

RAIL POSTS AND BASE PLATES SHALL BE TESTED FOR IMPACT PROPERTIES IN ACCORDANCE WITH ASTM A370 CHARPY IMPACT TESTING USING TYPE A SPECIMEN.

Vermont Agency of Transportation
RECEIVED
CK'D BY Stantec OK'D BY D Bonneau
March 31, 2016
RESUBMIT No Approved
BY D Bonneau DATE 04/11/16

HIGHWAY SAFETY CORP
GLASTONBURY, CT
860-633-9445

ITEM 525.33 2-RAIL BRIDGERAIL GALVANIZED
I-89 OVER STOWE ST. & THATCHER BROOK
B.I.N. BR46A P.I.N. IM 089-2(43)
TOWN OF WATERBURY, WASHINGTON COUNTY

AISC CERTIFIED FABRICATOR

HSC JOB NO. 2077
SHEET NO. 3 of 4

GENERAL CONTRACTOR
SUB CONTRACTOR LAFAYETTE

DRAWN	CHECKED	DATE	SCALE	SIZE
MKT		02-24-16	NONE	D

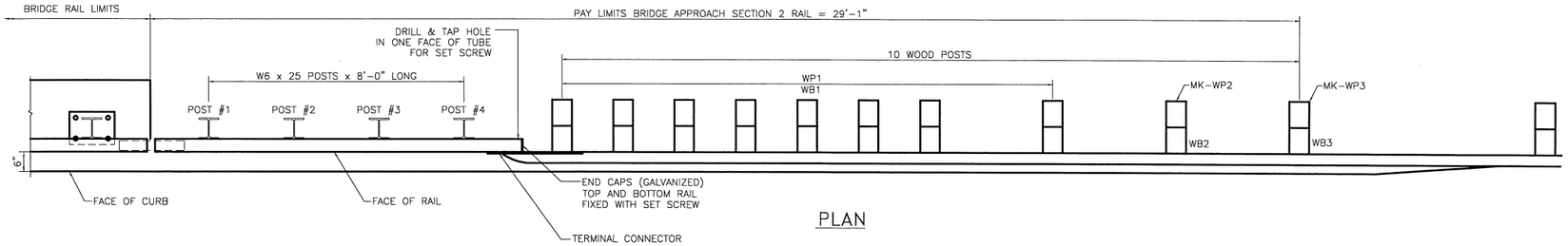

PLAN

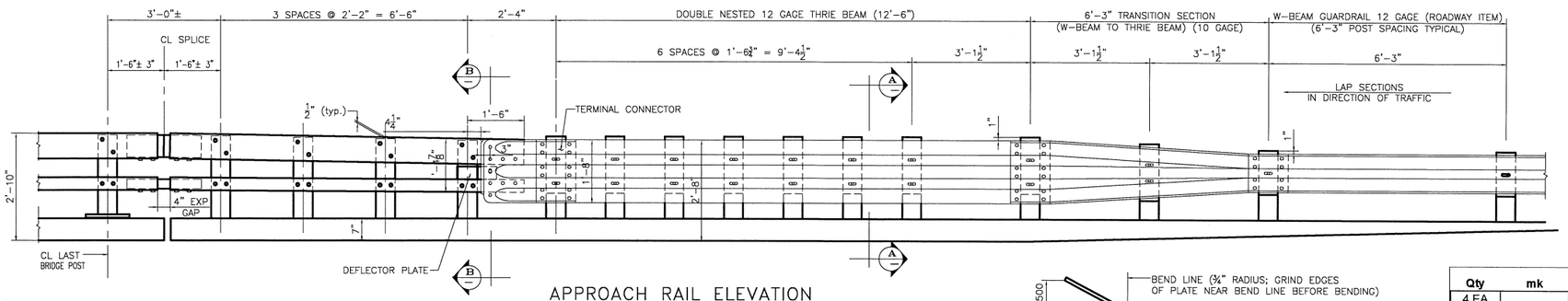

APPROACH RAIL ELEVATION

LEADING END (RIGHT) IS SHOWN
DEPARTURE END (LEFT) SIMILAR BUT OPPPOSITE HAND

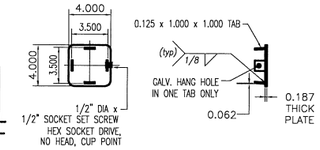

END CAP (4x4)

0.187 x 4.000 x 4.000 (A709 gr 36)

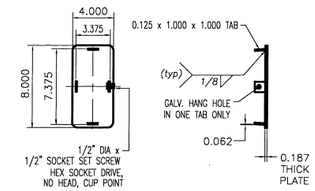

END CAP (8x4)

0.187 x 4.000 x 8.000 (A709 gr 36)

NOTES:

1. PAYMENT FOR GUARDRAIL APPROACH SECTION – GALVANIZED 2 RAIL, SHALL INCLUDE THE TERMINAL CONNECTOR, THE CONNECTION PLATE, THE DEFLECTOR PLATE, RAIL, POSTS, BLOCKS AND ATTACHMENT HARDWARE.
2. ALL APPROACH RAIL SPLICES SHALL BE LAPPED IN THE DIRECTION OF TRAFFIC FLOW.
3. TUBE AND STEEL POST MATERIALS, DIMENSION SIZES AND NOTES SHALL BE THE SAME AS THOSE OF THE BRIDGE RAIL UNLESS OTHERWISE NOTED.
4. APPROACH RAIL BOLTS SHALL BE ASTM A307 GRADE A AND NUTS SHALL BE AASHTO M291 (ASTM 563 GRADE A OR BETTER (GALVANIZED). WASHERS SHALL BE ASTM F844.
5. WELD TOP SPLICE BAR TO FIT BEND. USE COMPLETE PENETRATION WELD (B–U2).

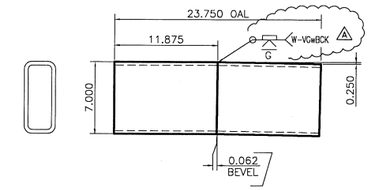

ANGLED SPLICE DETAIL

HSS 7 x 3 x 3/8 – FOR UPPER RAIL SPLICE

SEE BRIDGE RAIL SHEET FOR DETAIL ON LOWER RAIL SPLICE TUBE

Vermont Agency of Transportation
RECEIVED
Materials & Design and Drainage (802) 828-2561 Approval Stamp

CK'D BY Stantec OK'D BY D Bonneau

March 31, 2016

RESUBMIT No Approved
BY D Bonneau DATE 04/11/16

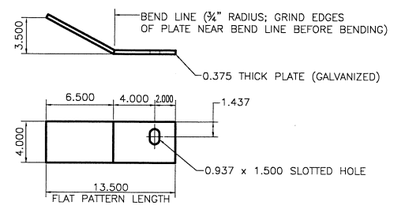

DEFLECTOR PLATE

0.375 x 4.000 x 13.500 (A709 gr 36)

RIGHT HAND APPROACH SHOWN – LEFT HAND BENT OPPOSITE

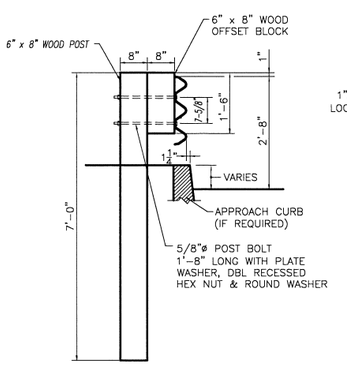

SECTION A–A

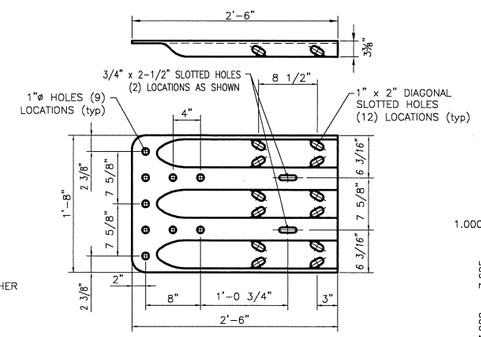

TERMINAL CONNECTOR

10 GAUGE (AASHTO M180 B2)

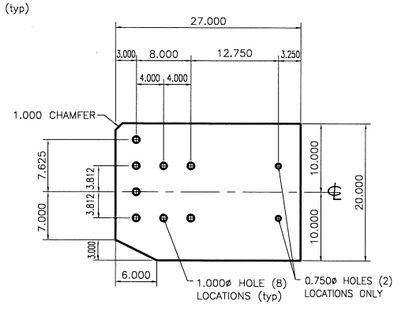

CONNECTION PLATE

0.375 x 20.000 x 27.000 (A709 gr 36)

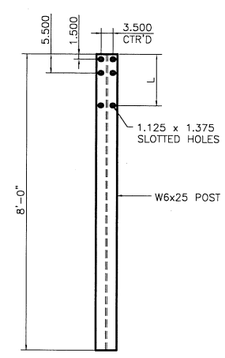

STEEL POST

STEEL POST CHART

No.	L
#1	1'–3.250"
#2	1'–3.000"
#3	1'–2.687"
#4	1'–2.375"

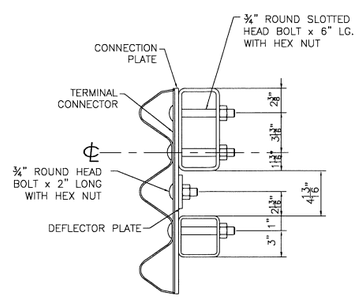

SECTION B–B

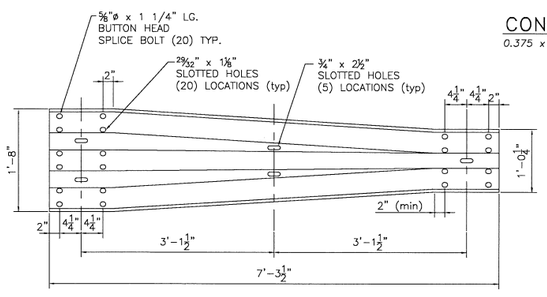

THRIE TRANSITION PANEL

10 GAUGE (AASHTO M180 B2)

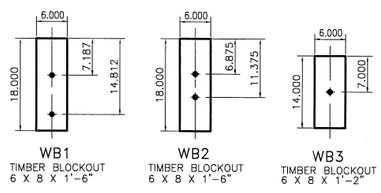

WB1 TIMBER BLOCKOUT 6 X 8 X 1'–6"

WB2 TIMBER BLOCKOUT 6 X 8 X 1'–6"

WB3 TIMBER BLOCKOUT 6 X 8 X 1'–2"

WOOD BLOCK DETAILS

BILL OF MATERIAL

Qty	mk	Description	Spec.
4 EA		ITEM 621.72 GUARDRAIL APPROACH SECTION, GALVANIZED, 2 RAIL BOX BEAM	
4	01	W6x25 APPROACH POST - #1 x 8'-0" OAL (GALV)	A709 gr 50
4	02	W6x25 APPROACH POST - #2 x 8'-0" OAL (GALV)	A709 gr 50
4	03	W6x25 APPROACH POST - #3 x 8'-0" OAL (GALV)	A709 gr 50
4	04	W6x25 APPROACH POST - #4 x 8'-0" OAL (GALV)	A709 gr 50
4		UPPER RAIL APPROACH TUBE HSS 8 x 4 x 5/16 x 9'-4.000" w/ 3.500 SLOTS FOR 4" EXP GAP (GALV)	A500 gr B
4		LOWER RAIL APPROACH TUBE HSS 4 x 4 x 5/16 x 9'-4.000" w/ 3.500 SLOTS FOR 4" EXP GAP (GALV)	A500 gr B
4		CONNECTION PLATE PL 0.375" x 20.000" x 27.000" (GALV)	A709 gr 36
2		DEFLECTOR PLATE (RIGHT) PL 0.375 x 4.000 x 13.375 (GALV)	A709 gr 36
2		DEFLECTOR PLATE (LEFT) PL 0.375 x 4.000 x 13.375 (GALV)	A709 gr 36
4		END CAP FOR 8x4 TUBE 0.187 THICK PLATE 8.000 x 4.000 w/ WELDED TABS (GALV)	A709 gr 36
4		END CAP FOR 4x4 TUBE 0.187 THICK PLATE 4.000 x 4.000 w/ WELDED TABS (GALV)	A709 gr 36
4		(ANGLED) SPLICE TUBE (EXPANSION) FOR 8x4 UPPER RAIL HSS 7 x 3 x 3/8 x 1'-11.750" OAL (GALV)	A500 gr B
4		SPLICE TUBE (EXPANSION) FOR 4x4 LOWER RAIL HSS 3 x 3 x 5/16 x 1'-11.750" OAL (GALV)	A500 gr B
32		WOOD POST (WP1) 6 x 8 x 7'-0"	TIMBER
32		WOOD BLOCKOUT (WB1) 6 x 8 x 1'-6"	TIMBER
4		WOOD POST (WP2) 6 x 8 x 7'-0"	TIMBER
4		WOOD BLOCKOUT (WB2) 6 x 8 x 1'-6"	TIMBER
4		WOOD POST(WP3) 6 x 8 x 7'-0"	TIMBER
4		WOOD BLOCKOUT (WB3) 6 x 8 x 1'-2"	TIMBER
4		THRIE FLAT LIP BRIDGE SHOE (MODIFIED) 10 GA. GALV	aashto M180 B2
4		THRIE TRANSITION PANEL 6'-3" / 3'-1 1/2" 10 GA. GALV.	aashto M180 B2
8		THRIE PANEL 12'-6" / 1'-6 3/4" 12 GA. GALV.	aashto M180 A2
92		ROUND HEAD POST BOLT slot or wrench head - no shoulder 3/4" DIA x 6" LG. (GLV) w/ LOCK NUT & FLAT WASHER	A449
4		ROUND HEAD POST BOLT slot or wrench head - no shoulder 3/4" DIA x 2" LG. (GLV) w/ HEX NUT	A449
8		ROUND HEAD POST BOLT - oval shoulder 5/8" DIA x 1'-8" LG. (GALV) w/ DBL RECESS NUT, FLAT WASHER	A307
68		ROUND HEAD POST BOLT - oval shoulder 5/8" DIA x 1'-6" LG. (GALV) w/ DBL RECESS NUT, FLAT WASHER	A307
32		HEX HEAD BOLT 5/8 x 1-3/4" (GALV) w/ FLAT WASHER	A325
128		PANEL SPLICE BOLT 5/8 x 1-1/4" (GALV) w/ DOUBLE RECESSED NUT	A307
76		RECTANGULAR PLATE WASHER 0.187 x 1.750 x 3.000 (GALV)	A709 gr 36
32		SPACER PIPE - GALVANIZED 3/4" SCH. 40 x 1/2" LONG (GLV)	A53 gr B

HIGHWAY SAFETY CORP
GLASTONBURY, CT
860–633–9445

ITEM 621.72 GUARDRAIL APPROACH SECTION, GALVANIZED 2 RAIL BOX BEAM (S–360B)
B.I.N. BR46A P.I.N. IM 089–2(43)
TOWN OF WATERBURY, WASHINGTON COUNTY

AISC CERTIFIED FABRICATOR

GENERAL CONTRACTOR

SUB CONTRACTOR: LAFAYETTE

HSC JOB NO. 2077

SHEET NO. 4 of 4

DRAWN	CHECKED	DATE	SCALE	SIZE
MKT		02–24–16	NONE	D