NEXT BEAM GENERAL NOTES

1. MIN. CONCRETE STRENGTH AT 28 DAYS SHALL BE 7,000 PSI.
2. MIN. CONCRETE STRENGTH AT STRESS TRANSFER SHALL BE 5,500 PSI.
3. REINFORCING STEEL SHALL BE GR-60, ASTM A-615 (AASHTO M31) LEVEL II (DUAL COATED).
4. PRESTRESSING STRANDS SHALL CONFORM TO ASTM A-416 (AASHTO M203) AND SHALL CONSIST OF 0.60"ø x 270 KSI 7-WIRE LOW RELAXATION STRANDS.
5. PRESTRESSING STRANDS SHALL EACH BE PULLED TO HAVE A NET TENSION OF 44.0 K AFTER ACCOUNTING FOR CHUCK SLIPPAGE. TENSION SHALL BE VERIFIED BY MEASURING STRAND ELONGATION. (SEE EXAMPLE ELONGATION CALCULATION AND TENSIONING PROCEDURE, THIS SHEET.)
6. ENDS OF PRESTRESSING STRANDS SHALL BE CUT FLUSH WITH END OF NEXT BEAM STEMS (UNLESS NOTED OTHERWISE).
7. ALL EXPOSED CORNERS SHALL BE CHAMFERED 3/4".
8. THE TOP OF BEAMS SHALL RECEIVE A SMOOTH SCREED FINISH (UNLESS NOTED OTHERWISE).
9. SHEAR KEY SURFACES SHALL BE SAND BLASTED CLEAN.
10. BEAMS SHALL BE HANDLED AND ERECTED USING THE LIFTING LOOPS ONLY. RIGGING SHALL BE CONFIGURED SUCH THAT EQUAL AND VERTICAL FORCES ARE APPLIED TO EACH OF THE TWO LIFTING LOOPS AT EACH END OF THE BEAM. THE PINS OF THE SHACKLES SHALL BE PLACED THROUGH THE LIFTING LOOPS. SEE DETAIL, THIS SHEET. BEAMS SHALL BE STORED AND TRANSPORTED WITH TIMBER SUPPORTS WITHIN 2'-0" OF THE BEAM ENDS, UNLESS APPROVED BY J.P. CARRARA & SONS, INC.
11. MATERIAL SPECIFICATION AND MIX DESIGN SHALL CONFORM TO VERMONT SPEC. P510.02 AND P510.05 RESPECTIVELY.

    DESIGN MIX: J.P.C. BRIDGE MIX #425M
12. QUALITY CONTROL PROCEDURES ARE IN ACCORDANCE WITH PCI REQUIREMENTS. J.P. CARRARA & SONS, INC. IS A PCI CERTIFIED PLANT.
13. CURING METHOD: AS SOON AS THE TOP OF BEAM IS FINISHED, A COVER OF INSULATED POLY. THE DESIRED CURING TEMPERATURE RANGE SHALL NOT DROP BELOW 70°F. THE TEMPERATURE SHALL BE RECORDED BY AUTOMATIC SENSOR INSTRUMENTS ON GRAPH CHARTS, SPACED NOT MORE THAN 100' APART AND WILL CONTINUE UNTIL RELEASE STRENGTH IS ACHIEVED. EACH CHART SHALL BE MARKED WITH THE CASTING DATED AND LOCATION OF THE RECORDER. IF NECESSARY TO MAINTAIN CASTING BED TEMPERATURE PRIOR TO CONCRETE PLACEMENT OR TO ACCELERATE EARLY AGE STRENGTH GAIN, EXTERNAL RADIANT HEAT MAY BE EMPLOYED VIA HOT WATER DUCTS BENEATH AND WITHIN THE PERIPHERY OF THE CASTING BED. MAXIMUM CURING TEMPERATURE SHALL NOT EXCEED PCI SPECIFIED LIMITS.
14. OWNER SHALL PROVIDE APPROPRIATE WATERPROOFING TO GROUTED AND/OR EPOXIED SHEAR KEYS. J.P. CARRARA & SONS, INC. SHALL NOT BE HELD LIABLE FOR PROBLEMS ASSOCIATED WITH MOISTURE INFILTRATING GROUTED AND/OR EPOXIED SHEAR KEYS.

DRAWING INDEX

SHT. #	DRAWING TITLE	REV. #	REV. DATE
C1	COVER SHEET		
F1	PRECAST NEXT BEAM LAYOUT		
F2	CURTAIN WALL ELEVATIONS		
NB1	PRESTRESSED NEXT BEAM DETAILS		
NB1.1	PRECAST CURTAIN WALL DETAILS		
NB2	PRESTRESSED NEXT BEAM DETAILS "CR-NB1"		
NB2.1	PRESTRESSED NEXT BEAM DETAILS "CR-NB1"		
NB2.2	PRECAST CURTAIN WALL DETAILS "CR-NB1"		
NB3	PRESTRESSED NEXT BEAM DETAILS "CR-NB2"		
NB3.1	PRESTRESSED NEXT BEAM DETAILS "CR-NB2"		
NB3.2	PRECAST CURTAIN WALL DETAILS "CR-NB2"		
NB4	PRESTRESSED NEXT BEAM DETAILS "CR-NB3"		
NB4.1	PRESTRESSED NEXT BEAM DETAILS "CR-NB3"		
NB4.2	PRECAST CURTAIN WALL DETAILS "CR-NB3"		
M1	MATERIALS LIST FOR NEXT BEAMS		

DESIGN LIVE LOAD: HL-93

EXAMPLE PRESTRESSING STRAND ELONGATION CALC. AND TENSIONING

(NOT TO BE USED FOR CONSTRUCTION)

SIZE & GRADE: 0.60"ø x 270 KSI
AREA: 0.217 IN^2
TENSION: 44,000 LB. EACH STRAND
GRIP-TO-GRIP: 252'-0" = 252.00'
Es = 28,500,000 PSI (ASSUMED FOR THESE CALCULATIONS; VALUE TO BE OBTAINED FOR STRAND SPOOL ACTUALLY USED)

EXAMPLE:

$$\Delta = \frac{PL}{AE} = \frac{(44{,}000 - 3{,}000) \times 252.00 \times 12}{0.217 \times 28{,}500{,}000} = 20.047"$$

THEREFORE: (TOLERANCES ± 5%)
Δ UPPER LIMIT = 1.05 x 20.047" = 21.05" = 21"
Δ LOWER LIMIT = 0.95 x 20.047" = 19.04" = 19"

EXTRA FORCE REQUIRED TO COMPENSATE FOR 1/2" CHUCK SLIPPAGE:

$$\Delta P = \frac{0.5 \times 41{,}000}{20.047} = 1{,}023 \text{ LBS.}$$

TOTAL TENSIONING FORCE = 44,000 + 1,023 = 45,023 LBS.

ADDITIONALLY, INCREASED ELONGATION AND THE CORRESPONDING FORCE DUE TO FORM SHORTENING SHALL BE ACCOUNTED FOR IN THE CALCULATIONS USED FOR CONSTRUCTION PER PROVISION PCI MNL 116 5.3.11.3.

STRAND TENSIONING PROCEDURE:

1. PULL EACH STRAND INITIALLY TO 3,000* LBS. AND MARK STRAND.
2. THEN PULL EACH STRAND TO A TOTAL TENSION OF 45,023* LBS. AND MEASURE ELONGATION AFTER SEATING. IT MUST BE BETWEEN 19"* AND 21"*.

   * NOTE: FORCES READ ON STRESSING JACK GAUGES MUST BE MADE TO CORRESPOND TO ABOVE VALUES BASED ON CALIBRATION DATA FOR SPECIFIC JACK USED.
3. STRANDS IN BOTTOM TWO ROWS SHALL BE RE-PULLED TO VERIFY SHORTENING EFFECT OF SELF STRESSING BED. RE-PULL FORCE SHALL NOT INCLUDE OVER-PULL FOR SHORTENING.

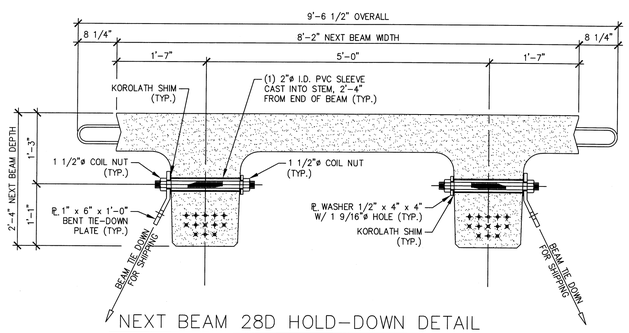

NEXT BEAM 28D HOLD-DOWN DETAIL FOR SHIPPING

3/4" = 1'-0"

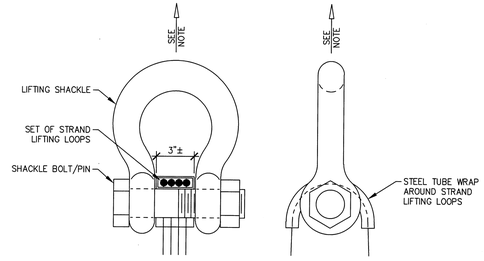

NOTE: BEAMS SHALL BE HANDLED AND ERECTED USING THE LIFTING LOOPS ONLY. RIGGING SHALL BE CONFIGURED SUCH THAT EQUAL AND VERTICAL FORCES ARE APPLIED TO EACH SET OF LIFTING LOOPS AT EACH END OF THE BEAM. SHACKLE BOLT/PIN SHALL BE PLACED UNDER LIFT LOOPS AS SHOWN. DESIGN AND CONFIGURATION OF RIGGING BY PURCHASER.

LIFTING SHACKLE DETAILS

N.T.S.

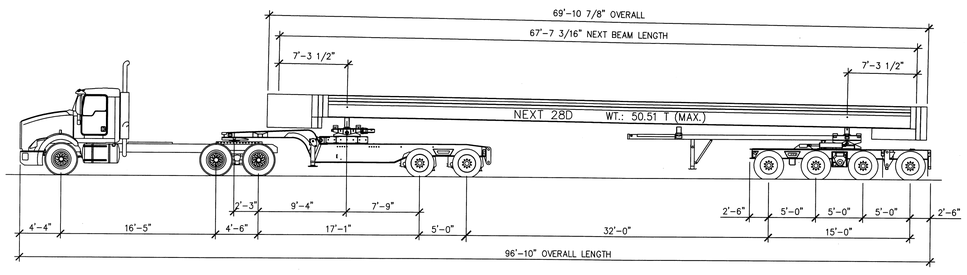

SHIPPING ELEVATION

N.T.S.

APPROVAL STAMP:

J.P. CARRARA & SONS INC.
Precast & Prestress Manufacturer
2464 CASE STR., MIDDLEBURY, VERMONT 05753 Phone:(802)388-6361 Fax:(802)388-9010

AUSTIN CONSTRUCTION, INC.
CONTRACTOR
CONCORD, VERMONT

STATE OF VERMONT AGENCY OF TRANSPORTATION
COUNTY OF ORANGE

TOWN OF CORINTH
CHICKEN FARM ROAD T.H.16 CLASS 3 LOCAL ROAD
BRIDGE NO.: 36 PROJECT NO.: BRO 1447 (29)

COVER SHEET

DATE:	FEB. 11, 2015
SCALE:	NOTED
CHKD: RM	DFTM: PSS
JOB NO:	23448-014
DWG. NO:	C1

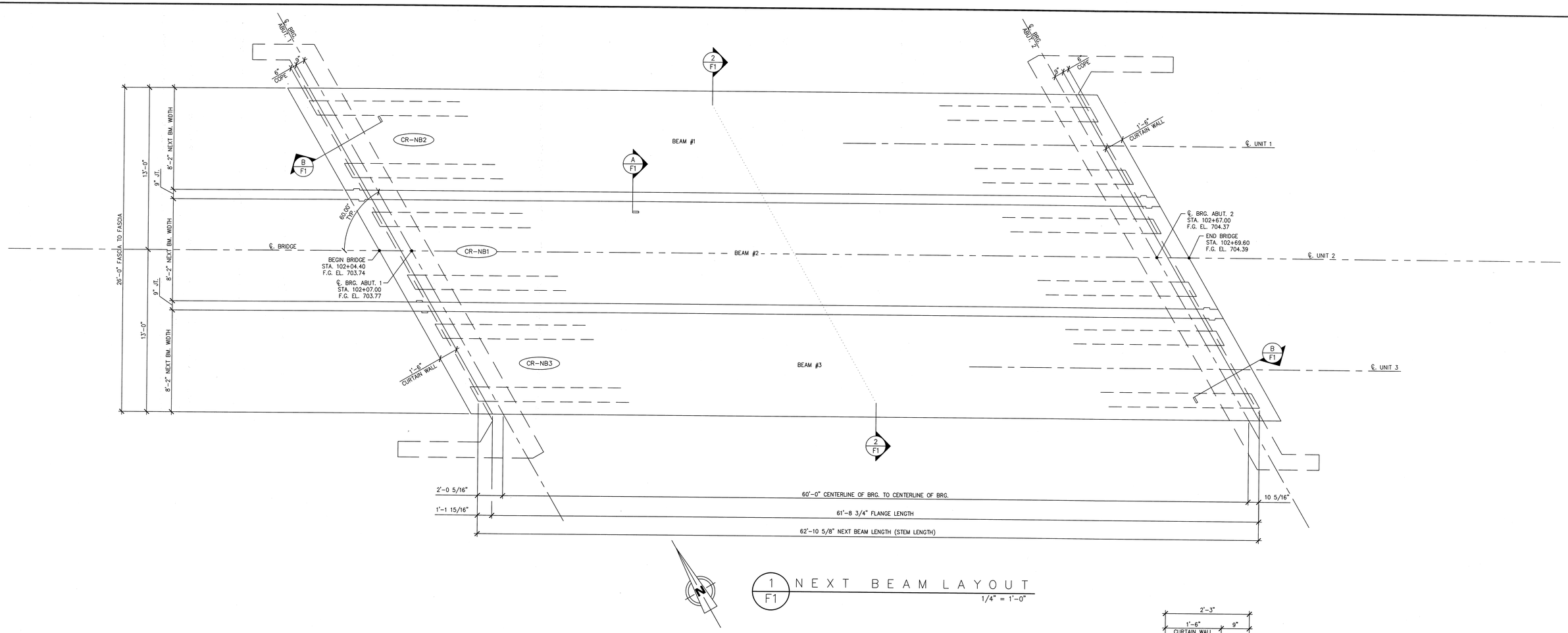

1 / F1 NEXT BEAM LAYOUT

1/4" = 1'-0"

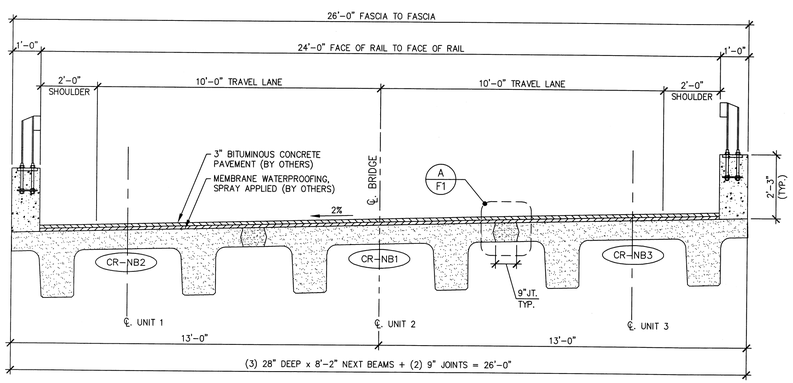

2 / F1 TRANSVERSE NEXT BEAM SECTION

3/8" = 1'-0"

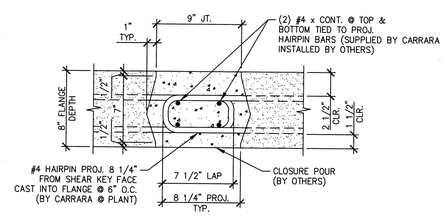

A / F1 NEXT BEAM CLOSURE POUR

1 1/2" = 1'-0"

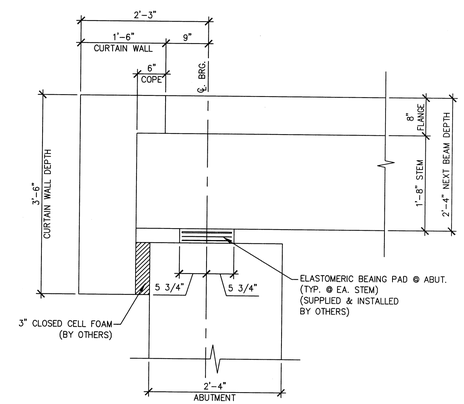

B / F1 BEARING DETAIL

3/4" = 1'-0"

APPROVAL STAMP:

J.P. CARRARA & SONS INC.
Precast & Prestress Manufacturer
2464 CASE STR., MIDDLEBURY, VERMONT 05753 Phone:(802)388-6361 Fax:(802)388-9010

AUSTIN CONSTRUCTION, INC.
CONTRACTOR
CONCORD, VERMONT

STATE OF VERMONT AGENCY OF TRANSPORTATION
COUNTY OF ORANGE

TOWN OF CORINTH
CHICKEN FARM ROAD T.H.16 CLASS 3 LOCAL ROAD
BRIDGE NO.: 36 PROJECT NO.: BRO 1447 (29)

PRESTRESSED NEXT BEAM LAYOUT

DATE:	FEB. 11, 2015
SCALE:	NOTED
CHKD: RM	DFTM: PSS
JOB NO:	23448-014
DWG. NO:	F1

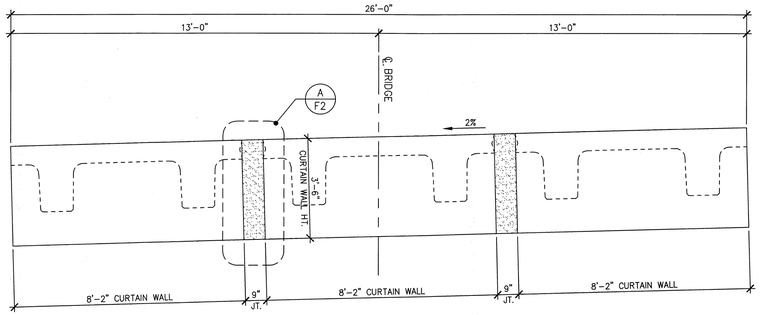

1/F2 CURTAIN WALL ELEVATION – ABUTMENT #1 (MARK END)

3/8" = 1'-0"

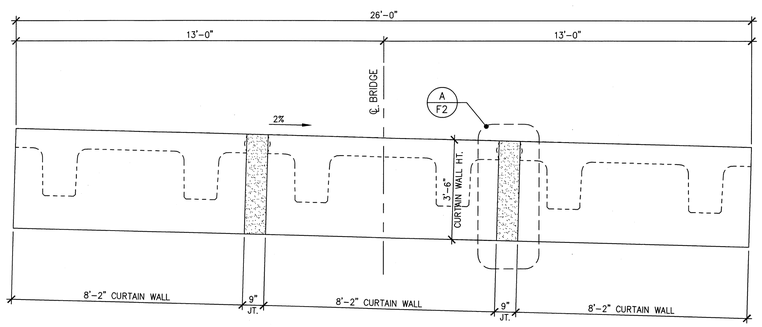

2/F2 CURTAIN WALL ELEVATION – ABUTMENT #2 (NON-MARK END)

3/8" = 1'-0"

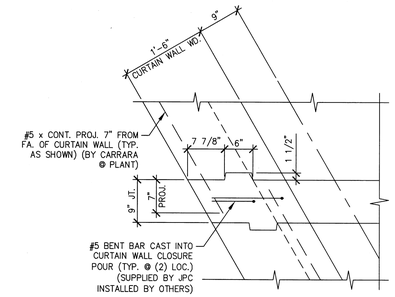

PLAN

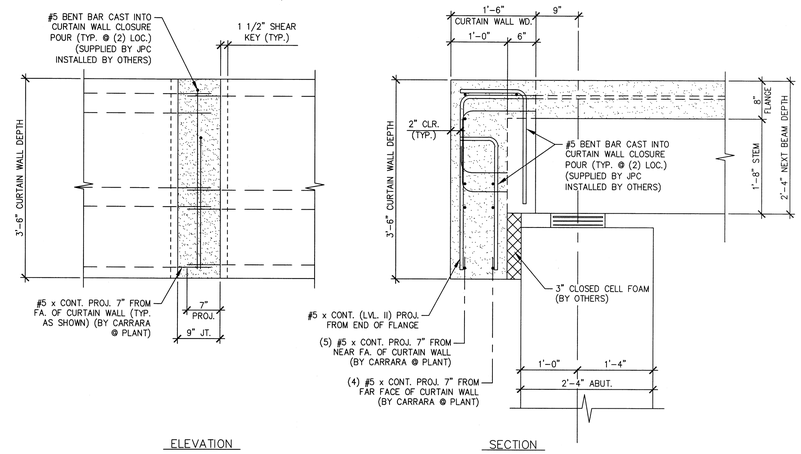

A/F2 CURTAIN WALL CLOSURE POUR DETAILS

3/4" = 1'-0"

APPROVAL STAMP:	J.P. CARRARA & SONS INC. Precast & Prestress Manufacturer 2464 CASE STR., MIDDLEBURY, VERMONT 05753 Phone:(802)388-6361 Fax:(802)388-9010	AUSTIN CONSTRUCTION, INC. CONTRACTOR CONCORD, VERMONT
	STATE OF VERMONT AGENCY OF TRANSPORTATION COUNTY OF ORANGE	DATE: FEB. 11, 2015 SCALE: NOTED
	TOWN OF CORINTH CHICKEN FARM ROAD T.H.16 CLASS 3 LOCAL ROAD BRIDGE NO.: 36 PROJECT NO.: BRO 1447 (29)	CHKD: RM DFTM: PSS JOB NO: 23448-014
	CURTAIN WALL ELEVATIONS	DWG. NO: F2

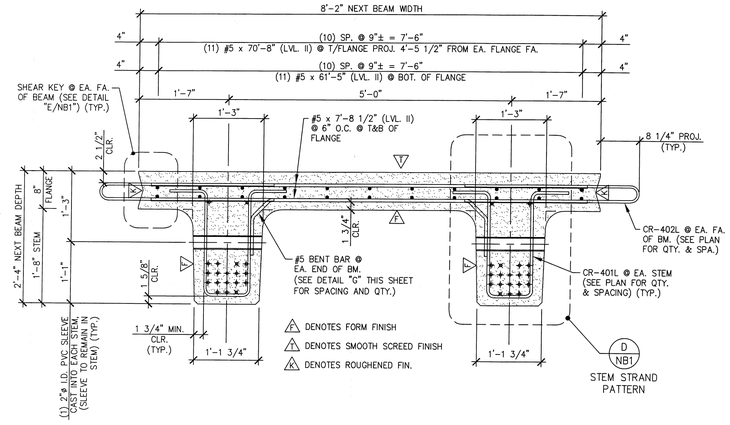

A / NB1 DIMENSIONAL & REINFORCING SECTION

3/4" = 1'-0"

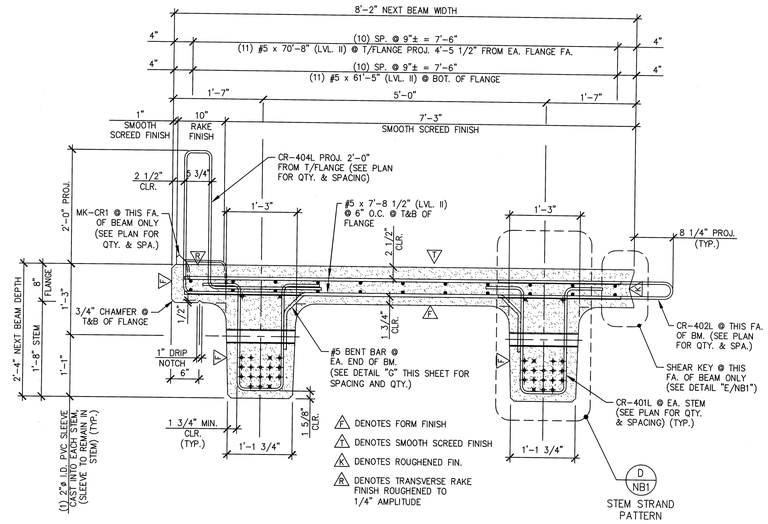

B / NB1 DIMENSIONAL & REINFORCING SECTION

3/4" = 1'-0"

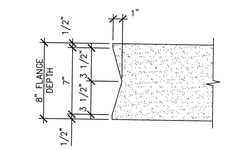

E / NB1 SHEAR KEY DETAIL

1 1/2" = 1'-0"

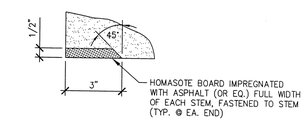

F / NB1 HOMASOTE DETAIL

3" = 1'-0"

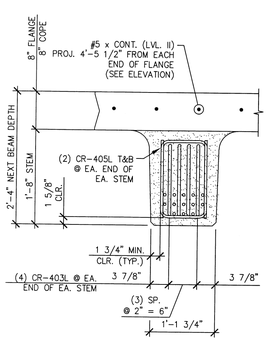

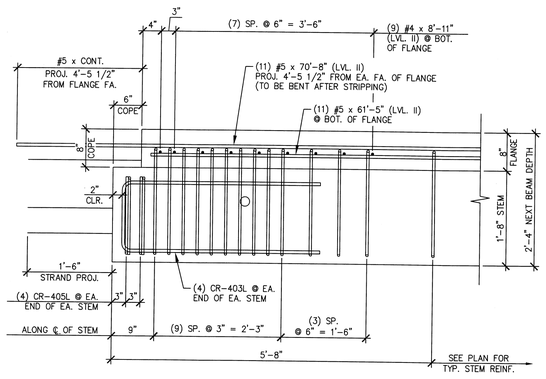

C / NB1 END BLOCK STEM REINFORCING DETAILS

SEE CURTAIN WALL DETAILS FOR PROJECTING BAR BENDING & PROJECTING STRAND BENDING ("A/NB1.1").

3/4" = 1'-0"

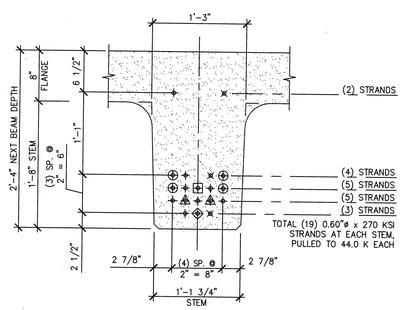

D / NB1 STEM STRAND PATTERN

1" = 1'-0"

PRESTRESSING NOTATIONS

- DENOTES STRAIGHT STRANDS TO BE CUT FLUSH WITH EA. END OF EA. STEM
- DENOTES STRAIGHT STRANDS TO PROJECT 1'-6" FROM EA. END OF EA. STEM
- DENOTES STRAIGHT STRANDS TO BE DEBONDED 6" FROM EA. END OF EA. STEM
- DENOTES STRAIGHT STRANDS TO BE DEBONDED 4'-0" FROM EA. END OF EA. STEM
- DENOTES STRAIGHT STRANDS TO BE DEBONDED 8'-0" FROM EA. END OF EA. STEM
- DENOTES STRAIGHT STRANDS TO BE DEBONDED 12'-0" FROM EA. END OF EA. STEM

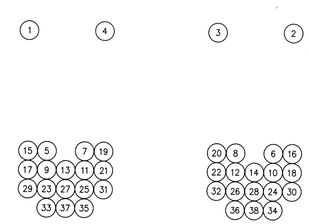

DETENSIONING SCHEDULE

N.T.S.

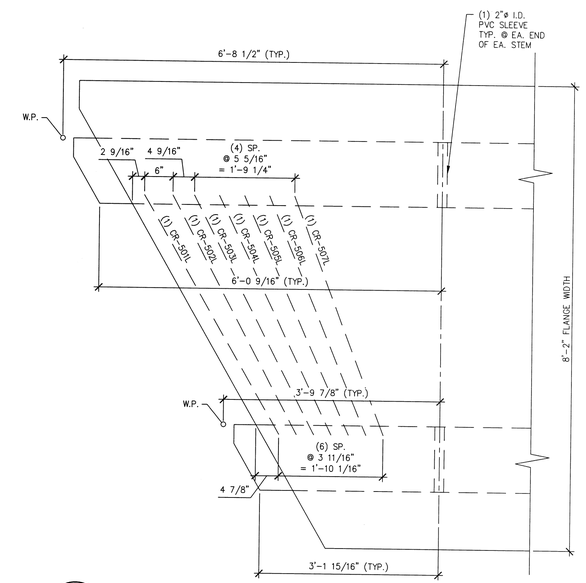

G / NB1 ADDITIONAL TRANSVERSE REINFORCING (@ BOTTOM OF FLANGE) & LOCATION OF PVC SLEEVES (@ STEM)

3/4" = 1'-0"

APPROVAL STAMP:

J.P. CARRARA & SONS INC.
Precast & Prestress Manufacturer
2464 OSE STR., MIDDLEBURY, VERMONT 05753 Phone:(802)388-6361 Fax:(802)388-9010

AUSTIN CONSTRUCTION, INC.
CONTRACTOR
CONCORD, VERMONT

STATE OF VERMONT AGENCY OF TRANSPORTATION
COUNTY OF ORANGE

TOWN OF CORINTH
CHICKEN FARM ROAD T.H.16 CLASS 3 LOCAL ROAD
BRIDGE NO.: 36 PROJECT NO.: BRO 1447 (29)

PRESTRESSED NEXT BEAM DETAILS

DATE:	FEB. 11, 2015
SCALE:	NOTED
CHKD: RM	DFTM: PSS
JOB NO:	23448-014
DWG. NO:	NB1

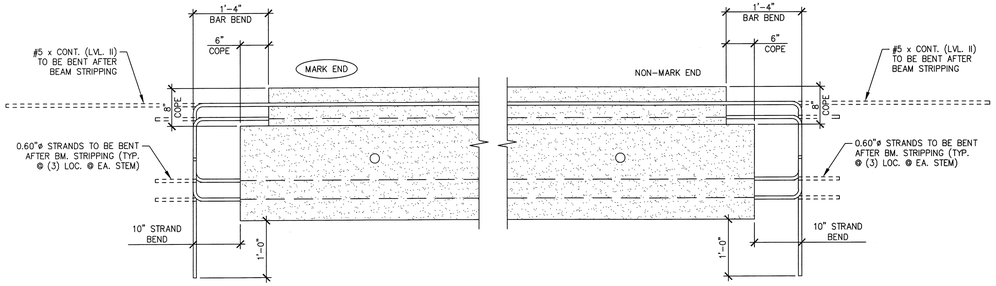

A / NB1.1 PROJECTING STRAND & PROJECTING BAR BEND DETAIL

3/4" = 1'-0"

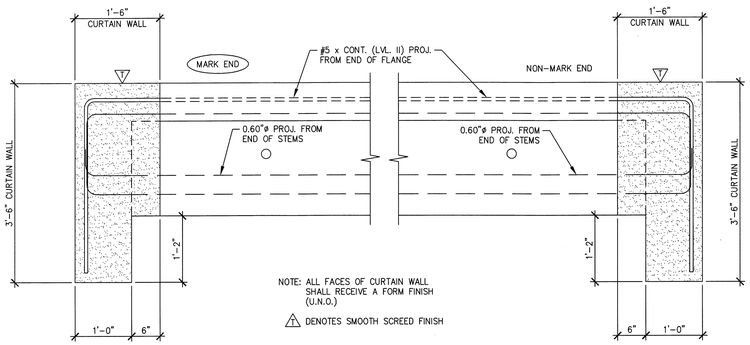

B / NB1.1 CURTAIN WALL DIMENSIONAL SECTIONS

3/4" = 1'-0"

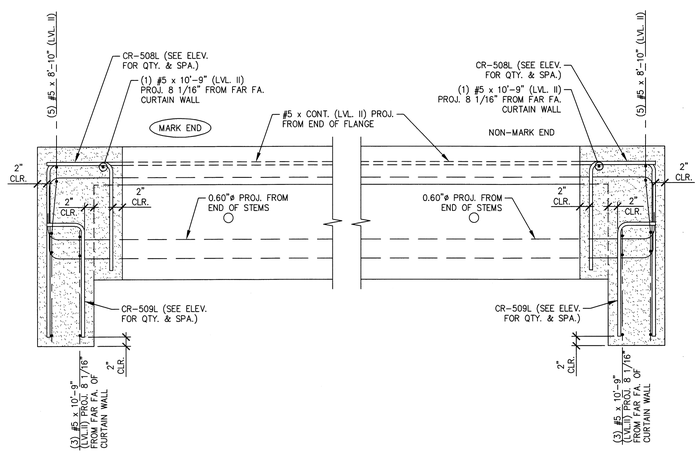

C / NB1.1 CURTAIN WALL REINFORCING SECTIONS

SEE CURTAIN WALL ELEVATIONS FOR
LONGITUDINAL BAR LENGTH CHANGES

3/4" = 1'-0"

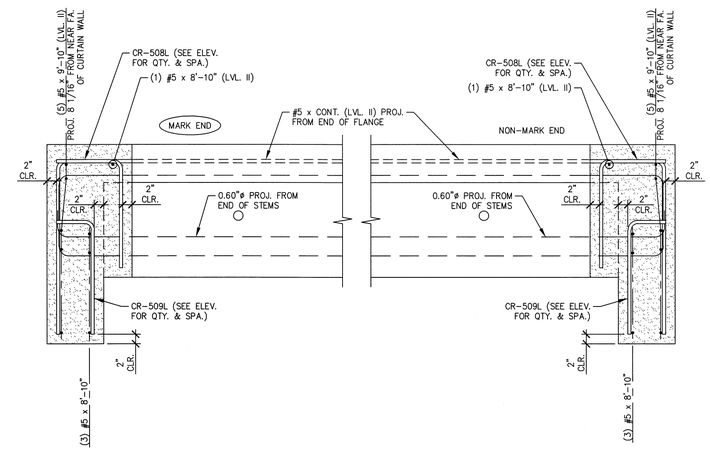

D / NB1.1 CURTAIN WALL REINFORCING SECTIONS

SEE CURTAIN WALL ELEVATIONS FOR
LONGITUDINAL BAR LENGTH CHANGES

3/4" = 1'-0"

APPROVAL STAMP:

J.P. CARRARA & SONS INC.
Precast & Prestress Manufacturer
2464 CASE STR., MIDDLEBURY, VERMONT 05753 Phone:(802)388-6361 Fax:(802)388-9010

AUSTIN CONSTRUCTION, INC.
CONTRACTOR
CONCORD, VERMONT

STATE OF VERMONT AGENCY OF TRANSPORTATION
COUNTY OF ORANGE

TOWN OF CORINTH
CHICKEN FARM ROAD T.H.16 CLASS 3 LOCAL ROAD
BRIDGE NO.: 36 PROJECT NO.: BRO 1447 (29)

PRECAST CURTAIN WALL DETAILS

DATE:	FEB. 11, 2015
SCALE:	NOTED
CHKD: RM	DFTM: PSS
JOB NO:	23448-014
DWG. NO:	NB1.1

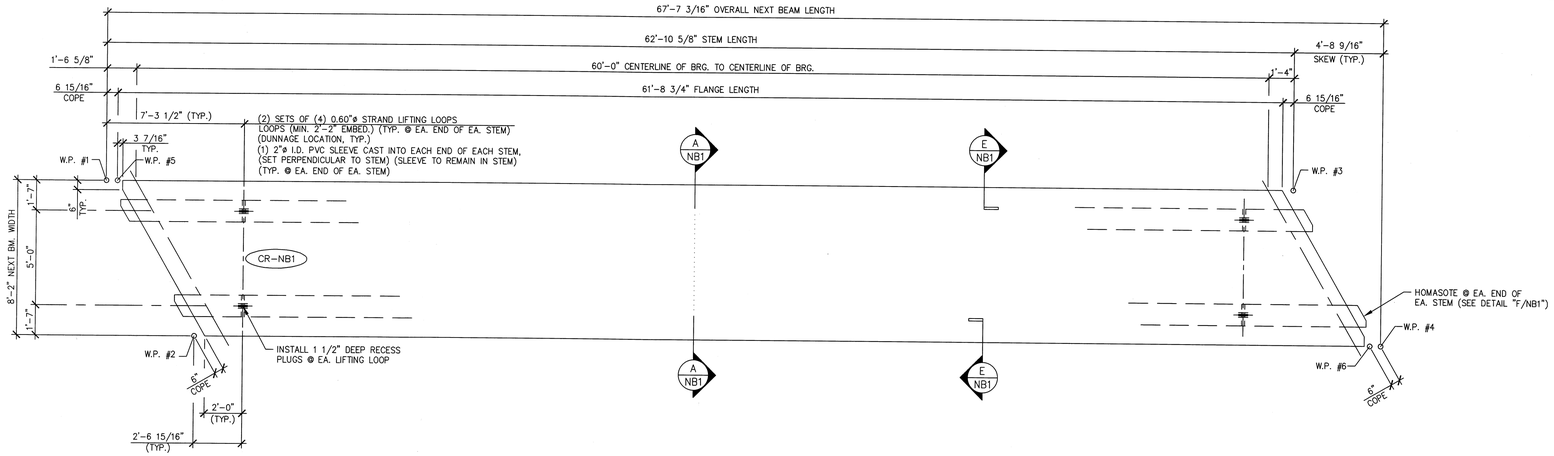

1 / NB2 DIMENSIONAL PLAN VIEW IN FORM

1/4" = 1'-0"

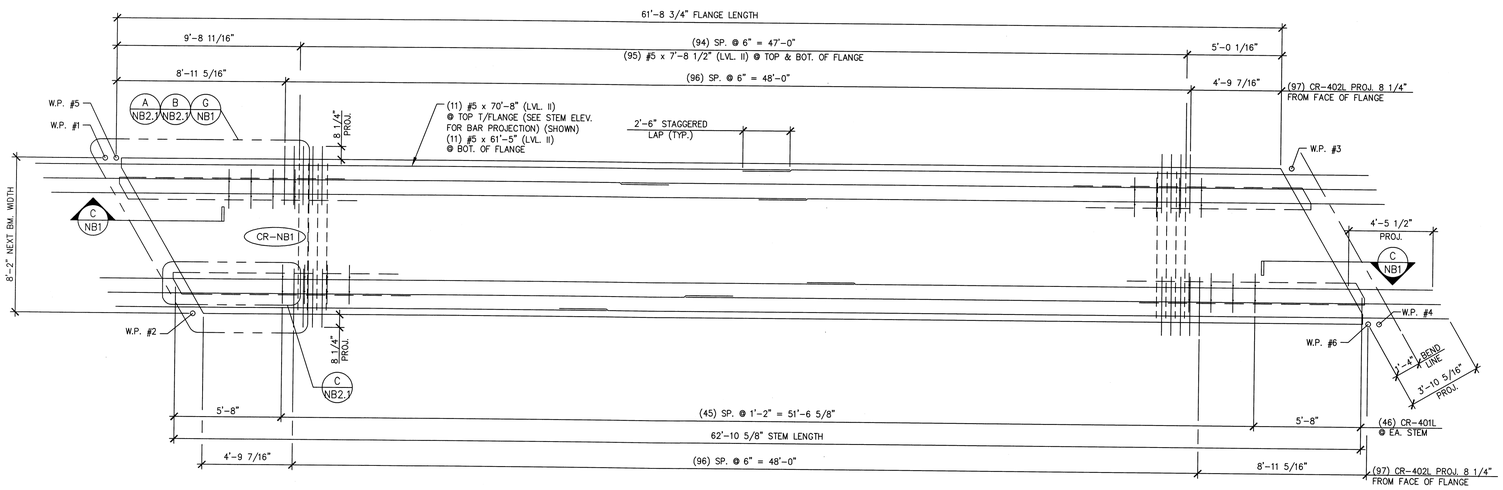

2 / NB2 REINFORCING PLAN VIEW IN FORM

1/4" = 1'-0"

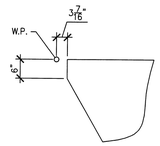

A / NB2 ACUTE CORNER BLOCKOUT DETAIL (FOR FLANGE)

1/2" = 1'-0"

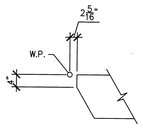

B / NB2 ACUTE CORNER BLOCKOUT DETAIL (FOR STEM)

1/2" = 1'-0"

MARK: CR-NB1	QTY.: 1	WT.: 44.20 T	VOL.: 21.82 cy

MATERIAL LIST / NEXT BEAM

ITEM	MARK	DESCRIPTION	QTY.
1	CR-401L	#4 BENT BAR (LEVEL II, DUAL COATED)	124
2	CR-402L	#4 BENT BAR (LEVEL II, DUAL COATED)	194
3	CR-403L	#4 BENT BAR (LEVEL II, DUAL COATED)	16
4	CR-405L	#4 BENT BAR (LEVEL II, DUAL COATED)	16
5	CR-406L	#4 BENT BAR (LEVEL II, DUAL COATED)	8
6	CR-407L	#4 BENT BAR (LEVEL II, DUAL COATED)	4
7	CR-408L	#4 BENT BAR (LEVEL II, DUAL COATED)	4
8	CR-409L	#4 BENT BAR (LEVEL II, DUAL COATED)	4
9	CR-411L	#4 BENT BAR (LEVEL II, DUAL COATED)	12
10	CR-412L	#4 BENT BAR (LEVEL II, DUAL COATED)	12
11	CR-413L	#4 BENT BAR (LEVEL II, DUAL COATED)	10
12	CR-414L	#4 BENT BAR (LEVEL II, DUAL COATED)	8
13	CR-415L	#4 BENT BAR (LEVEL II, DUAL COATED)	4
14	CR-416L	#4 BENT BAR (LEVEL II, DUAL COATED)	6
15	CR-501L	#5 BENT BAR (LEVEL II, DUAL COATED)	2
16	CR-502L	#5 BENT BAR (LEVEL II, DUAL COATED)	2
17	CR-503L	#5 BENT BAR (LEVEL II, DUAL COATED)	2
18	CR-504L	#5 BENT BAR (LEVEL II, DUAL COATED)	2
19	CR-505L	#5 BENT BAR (LEVEL II, DUAL COATED)	2
20	CR-506L	#5 BENT BAR (LEVEL II, DUAL COATED)	2
21	CR-507L	#5 BENT BAR (LEVEL II, DUAL COATED)	2
22		#4 x 8'-11" (LEVEL II, DUAL COATED)	18
23		#5 x 7'-8 1/2" (LEVEL II, DUAL COATED)	202
24		#5 x 7'-9" (LEVEL II, DUAL COATED)	8
25		#5 x 7'-10" (LEVEL II, DUAL COATED)	8
26		#5 x 7'-11" (LEVEL II, DUAL COATED)	8
27		#5 x 8'-0" (LEVEL II, DUAL COATED)	4
28		#5 x 8'-1" (LEVEL II, DUAL COATED)	4
29		#5 x 8'-2" (LEVEL II, DUAL COATED)	4
30		#5 x 8'-3" (LEVEL II, DUAL COATED)	4
31		#5 x 8'-4" (LEVEL II, DUAL COATED)	4
32		#5 x 8'-5" (LEVEL II, DUAL COATED)	4
33		#5 x 8'-7" (LEVEL II, DUAL COATED)	4
34		#5 x 8'-8" (LEVEL II, DUAL COATED)	8
35		#5 x 8'-9" (LEVEL II, DUAL COATED)	4
36		#5 x 70'-8" (W/ (1) 2'-6" STAGGERED LAP) (40' + 33'-2") (LVL. II, DUAL COATED)	11
37		#5 x 61'-5" (W/ (1) 2'-6" STAGGERED LAP) (40' + 23'-11") (LVL. II, DUAL COATED)	11
38			
39		2"ø I.D. PVC SLEEVE	4
40		SET OF (4) 0.60"ø x 270 KSI STRAND LIFTING LOOPS	4
41			

APPROVAL STAMP:

J.P. CARRARA & SONS INC.
Precast & Prestress Manufacturer
2464 CASE STR., MIDDLEBURY, VERMONT 05753 Phone:(802)388-6361 Fax:(802)388-9010

AUSTIN CONSTRUCTION, INC.
CONTRACTOR
CONCORD, VERMONT

STATE OF VERMONT AGENCY OF TRANSPORTATION
COUNTY OF ORANGE

TOWN OF CORINTH
CHICKEN FARM ROAD T.H.16 CLASS 3 LOCAL ROAD
BRIDGE NO.: 36 PROJECT NO.: BRO 1447 (29)

PRESTRESSED NEXT BEAM DETAILS

DATE: FEB. 11, 2015
SCALE: NOTED
CHKD: RM DFTM: PSS
JOB NO: 23448-014
DWG. NO: NB2

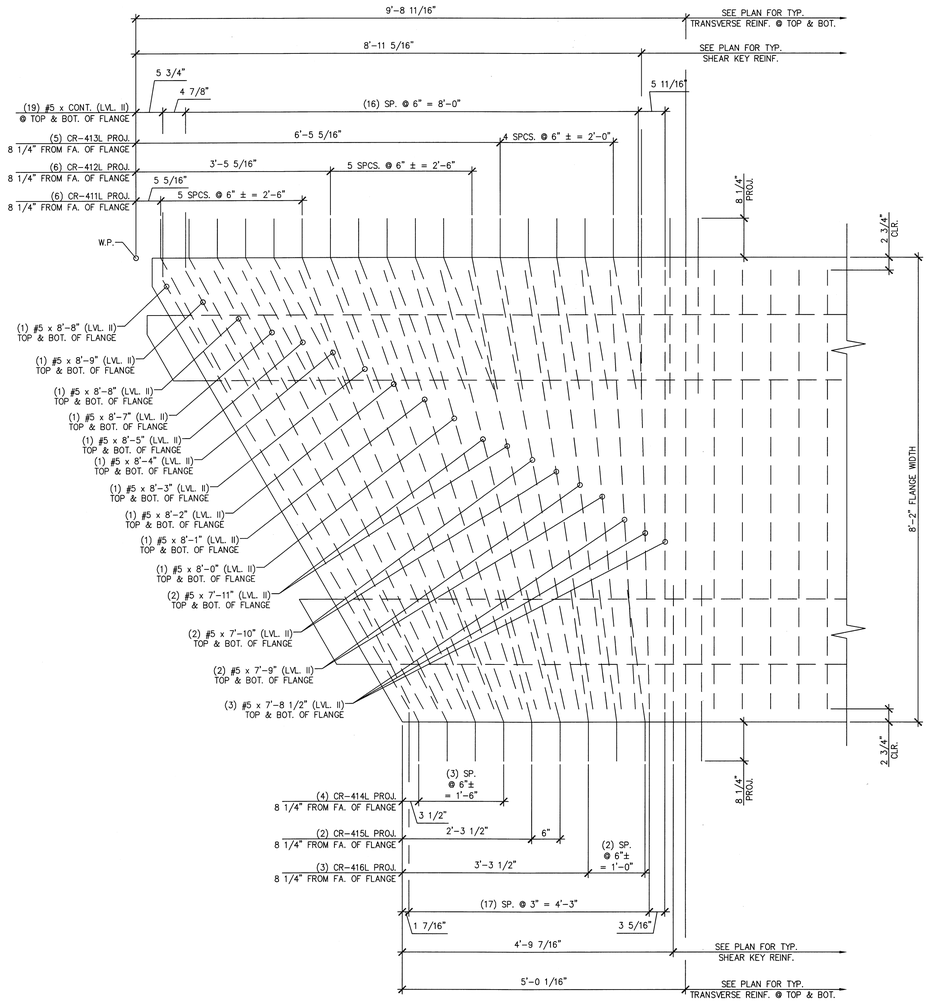

A NB2.1 BEAM END TRANSVERSE REINFORCING

3/4" = 1'-0"

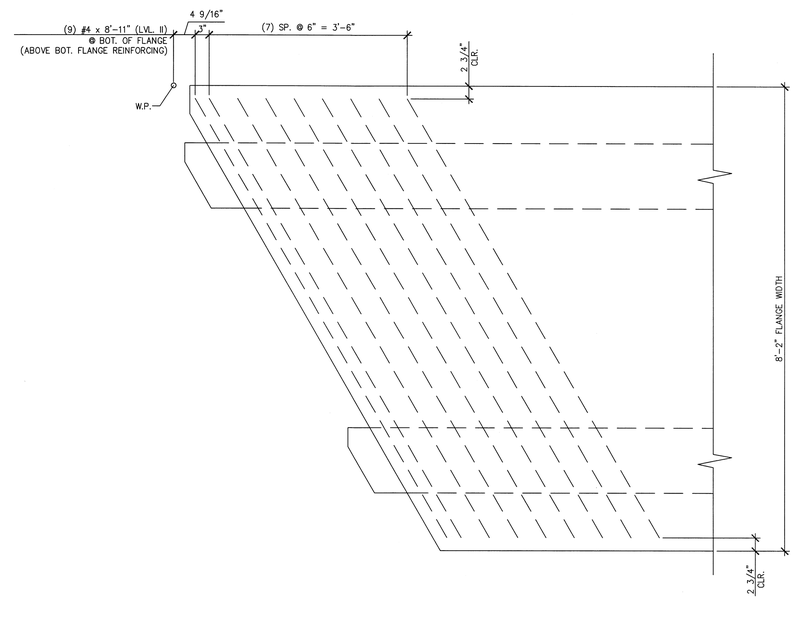

B NB2.1 ADDITIONAL TRANSVERSE REINFORCING AT BOTTOM OF FLANGE

3/4" = 1'-0"

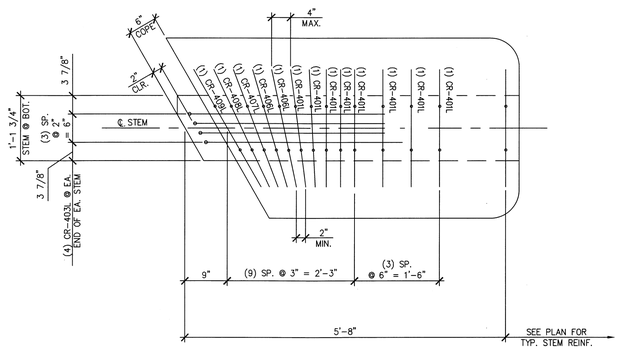

C NB2.1 BEAM END TRANSVERSE REINFORCING

3/4" = 1'-0"

APPROVAL STAMP:

J.P. CARRARA & SONS INC.
Precast & Prestress Manufacturer
2464 CASE STR., MIDDLEBURY, VERMONT 05753 Phone:(802)388-6361 Fax:(802)388-9010

AUSTIN CONSTRUCTION, INC.
CONTRACTOR
CONCORD, VERMONT

STATE OF VERMONT AGENCY OF TRANSPORTATION
COUNTY OF ORANGE

DATE: FEB. 11, 2015
SCALE: NOTED

TOWN OF CORINTH
CHICKEN FARM ROAD T.H.16 CLASS 3 LOCAL ROAD
BRIDGE NO.: 36 PROJECT NO.: BRO 1447 (29)

CHKD: RM DFTM: PSS
JOB NO: 23448-014

PRESTRESSED NEXT BEAM DETAILS

DWG. NO: NB2.1

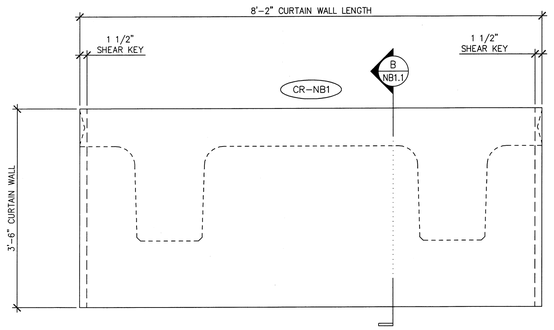

1 NB2.2 CURTAIN WALL DIMENSIONAL ELEVATION

VOL.: 1.53 cy
WT.: 3.10 T

3/4" = 1'-0"

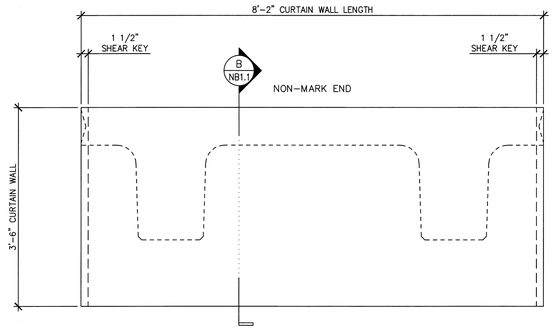

3 NB2.2 CURTAIN WALL DIMENSIONAL ELEVATION

VOL.: 1.53 cy
WT.: 3.10 T

3/4" = 1'-0"

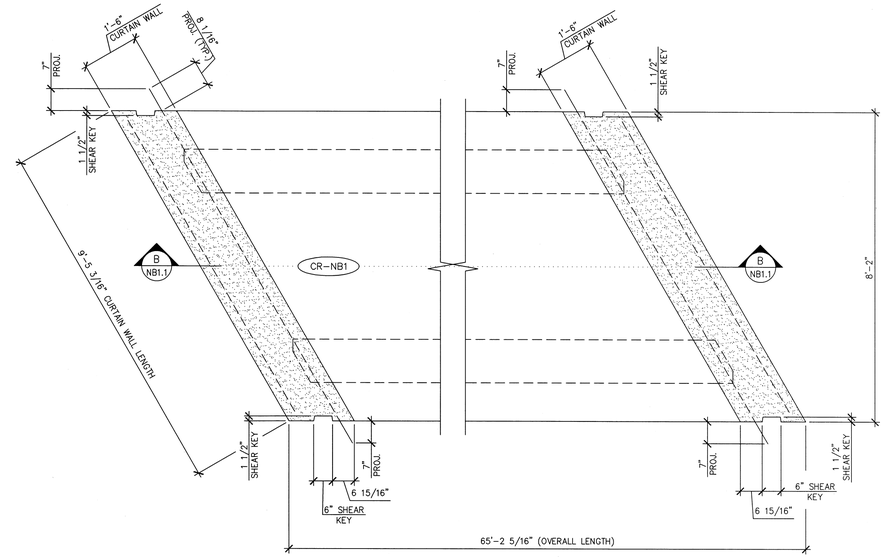

5 NB2.2 CURTAIN WALL DIMENSIONAL PLAN

1/2" = 1'-0"

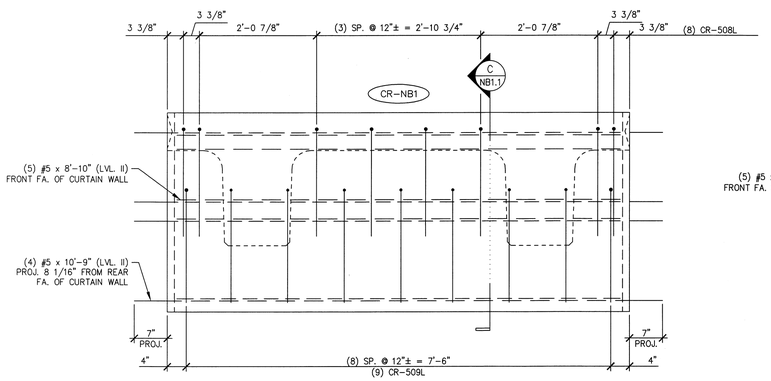

2 NB2.2 CURTAIN WALL REINFORCING ELEVATION

3/4" = 1'-0"

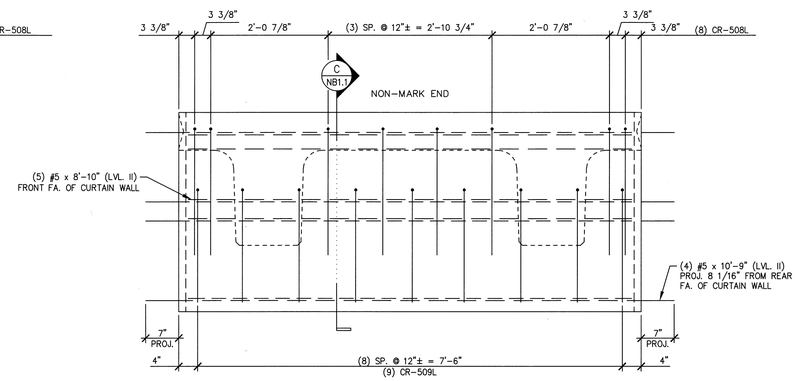

4 NB2.2 CURTAIN WALL REINFORCING ELEVATION

3/4" = 1'-0"

44.20 T = NEXT BEAM
3.10 T = CURTAIN WALL (MARK END)
3.10 T = CURTAIN WALL (NON-MARK END)
50.40 T = TOTAL BEAM WT.

MARK: CR-NB1 QTY.: 1

MATERIAL LIST / CURTAIN WALL

ITEM	MARK	DESCRIPTION	QTY./CURTAIN WALL	
			MARK END	NON-MARK END
1	CR-508L	#5 BENT BAR (LEVEL II, DUAL COATED)	8	8
2	CR-509L	#5 BENT BAR (LEVEL II, DUAL COATED)	9	9
3				
4		#5 x 10'-9" (LVL. II, DUAL COATED)	4	4
5		#5 x 8'-10" (LVL. II, DUAL COATED)	5	5
6				
7				
8				
9				
10				

APPROVAL STAMP:

J.P. CARRARA & SONS INC.
Precast & Prestress Manufacturer
2464 CASE STR., MIDDLEBURY, VERMONT 05753 Phone:(802)388-6361 Fax:(802)388-9010

AUSTIN CONSTRUCTION, INC.
CONTRACTOR
CONCORD, VERMONT

STATE OF VERMONT AGENCY OF TRANSPORTATION
COUNTY OF ORANGE

DATE: FEB. 11, 2015
SCALE: NOTED

TOWN OF CORINTH
CHICKEN FARM ROAD T.H.16 CLASS 3 LOCAL ROAD
BRIDGE NO.: 36 PROJECT NO.: BRO 1447 (29)

CHKD: RM DFTM: PSS
JOB NO: 23448-014

PRECAST CURTAIN WALL DETAILS

DWG. NO: NB2.2

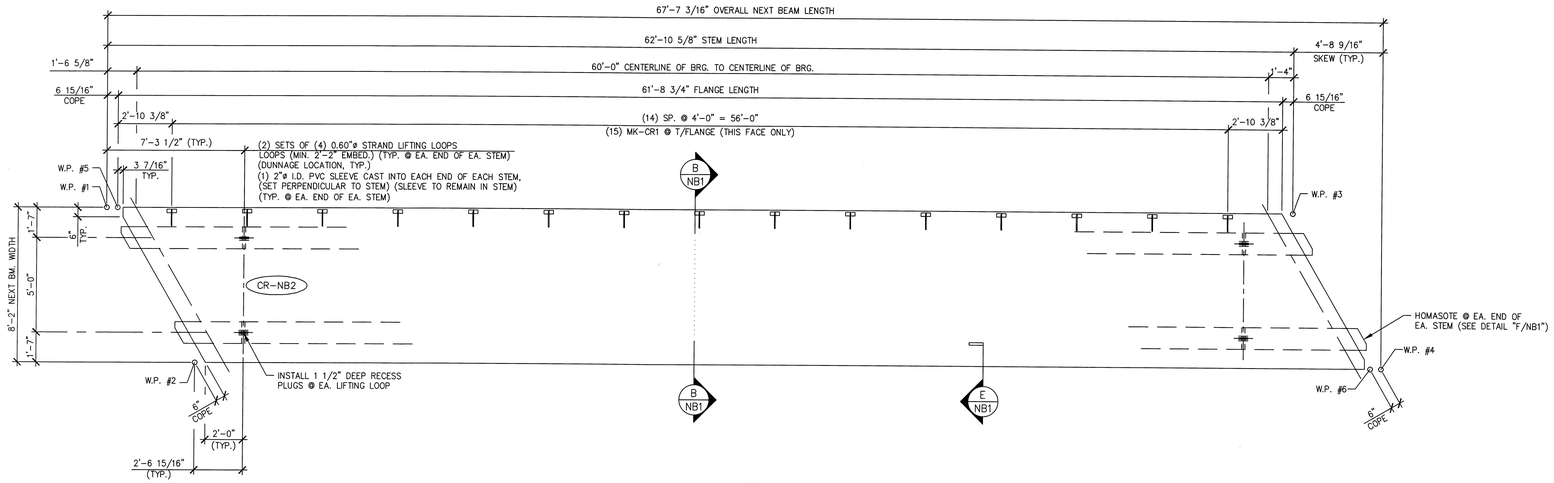

1 / NB3 DIMENSIONAL PLAN VIEW IN FORM

1/4" = 1'-0"

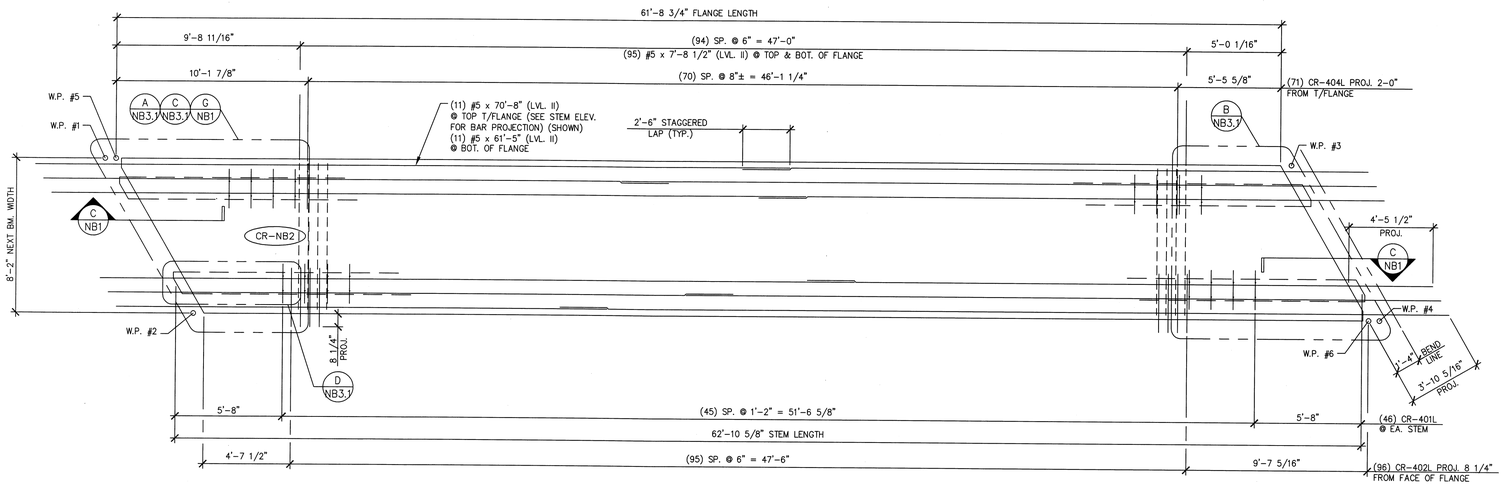

2 / NB3 REINFORCING PLAN VIEW IN FORM

1/4" = 1'-0"

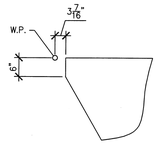

A / NB3 ACUTE CORNER BLOCKOUT DETAIL (FOR FLANGE)

1/2" = 1'-0"

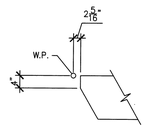

B / NB3 ACUTE CORNER BLOCKOUT DETAIL (FOR STEM)

1/2" = 1'-0"

MARK: CR-NB2	QTY.: 1	WT.: 44.27 T	VOL.: 21.86 cy

MATERIAL LIST / NEXT BEAM

ITEM	MARK	DESCRIPTION	QTY.
1	CR-401L	#4 BENT BAR (LEVEL II, DUAL COATED)	124
2	CR-402L	#4 BENT BAR (LEVEL II, DUAL COATED)	96
3	CR-403L	#4 BENT BAR (LEVEL II, DUAL COATED)	16
4	CR-404L	#4 BENT BAR (LEVEL II, DUAL COATED)	81
5	CR-405L	#4 BENT BAR (LEVEL II, DUAL COATED)	16
6	CR-406L	#4 BENT BAR (LEVEL II, DUAL COATED)	8
7	CR-407L	#4 BENT BAR (LEVEL II, DUAL COATED)	4
8	CR-408L	#4 BENT BAR (LEVEL II, DUAL COATED)	4
9	CR-409L	#4 BENT BAR (LEVEL II, DUAL COATED)	4
10	CR-410L	#4 BENT BAR (LEVEL II, DUAL COATED)	12
11	CR-414L	#4 BENT BAR (LEVEL II, DUAL COATED)	4
12	CR-415L	#4 BENT BAR (LEVEL II, DUAL COATED)	8
13	CR-416L	#4 BENT BAR (LEVEL II, DUAL COATED)	2
14	CR-417L	#4 BENT BAR (LEVEL II, DUAL COATED)	6
15	CR-418L	#4 BENT BAR (LEVEL II, DUAL COATED)	6
16	CR-501L	#5 BENT BAR (LEVEL II, DUAL COATED)	2
17	CR-502L	#5 BENT BAR (LEVEL II, DUAL COATED)	2
18	CR-503L	#5 BENT BAR (LEVEL II, DUAL COATED)	2
19	CR-504L	#5 BENT BAR (LEVEL II, DUAL COATED)	2
20	CR-505L	#5 BENT BAR (LEVEL II, DUAL COATED)	2
21	CR-506L	#5 BENT BAR (LEVEL II, DUAL COATED)	2
22	CR-507L	#5 BENT BAR (LEVEL II, DUAL COATED)	2
23			
24		#4 x 8'-11" (LEVEL II, DUAL COATED)	18
25		#5 x 7'-8 1/2" (LEVEL II, DUAL COATED)	202
26		#5 x 7'-9" (LEVEL II, DUAL COATED)	8
27		#5 x 7'-10" (LEVEL II, DUAL COATED)	8
28		#5 x 7'-11" (LEVEL II, DUAL COATED)	8
29		#5 x 8'-0" (LEVEL II, DUAL COATED)	4
30		#5 x 8'-1" (LEVEL II, DUAL COATED)	4
31		#5 x 8'-2" (LEVEL II, DUAL COATED)	4
32		#5 x 8'-3" (LEVEL II, DUAL COATED)	4
33		#5 x 8'-4" (LEVEL II, DUAL COATED)	4
34		#5 x 8'-5" (LEVEL II, DUAL COATED)	4
35		#5 x 8'-7" (LEVEL II, DUAL COATED)	4
36		#5 x 8'-8" (LEVEL II, DUAL COATED)	8
37		#5 x 8'-9" (LEVEL II, DUAL COATED)	4
38		#5 x 70'-8" (W/ (1) 2'-6" STAGGERED LAP) (40' + 33'-2") (LVL. II, DUAL COATED)	11
39		#5 x 61'-5" (W/ (1) 2'-6" STAGGERED LAP) (40' + 23'-11") (LVL. II, DUAL COATED)	11
40			
41	MK-CR1	MODIFIED UNIVERSAL 4APR DECK FORM HANGER 45° (GALV.) (20" LG.)	15
42		2"ø I.D. PVC SLEEVE	4
43		SET OF (4) 0.60"ø x 270 KSI STRAND LIFTING LOOPS	4

APPROVAL STAMP:

J.P. CARRARA & SONS INC.
Precast & Prestress Manufacturer
2464 CASE STR., MIDDLEBURY, VERMONT 05753 Phone:(802)388-6361 Fax:(802)388-9010

AUSTIN CONSTRUCTION, INC.
CONTRACTOR
CONCORD, VERMONT

STATE OF VERMONT AGENCY OF TRANSPORTATION
COUNTY OF ORANGE

TOWN OF CORINTH
CHICKEN FARM ROAD T.H.16 CLASS 3 LOCAL ROAD
BRIDGE NO.: 36 PROJECT NO.: BRO 1447 (29)

PRESTRESSED NEXT BEAM DETAILS

DATE: FEB. 11, 2015
SCALE: NOTED
CHKD: RM DFTM: PSS
JOB NO: 23448-014
DWG. NO: NB3

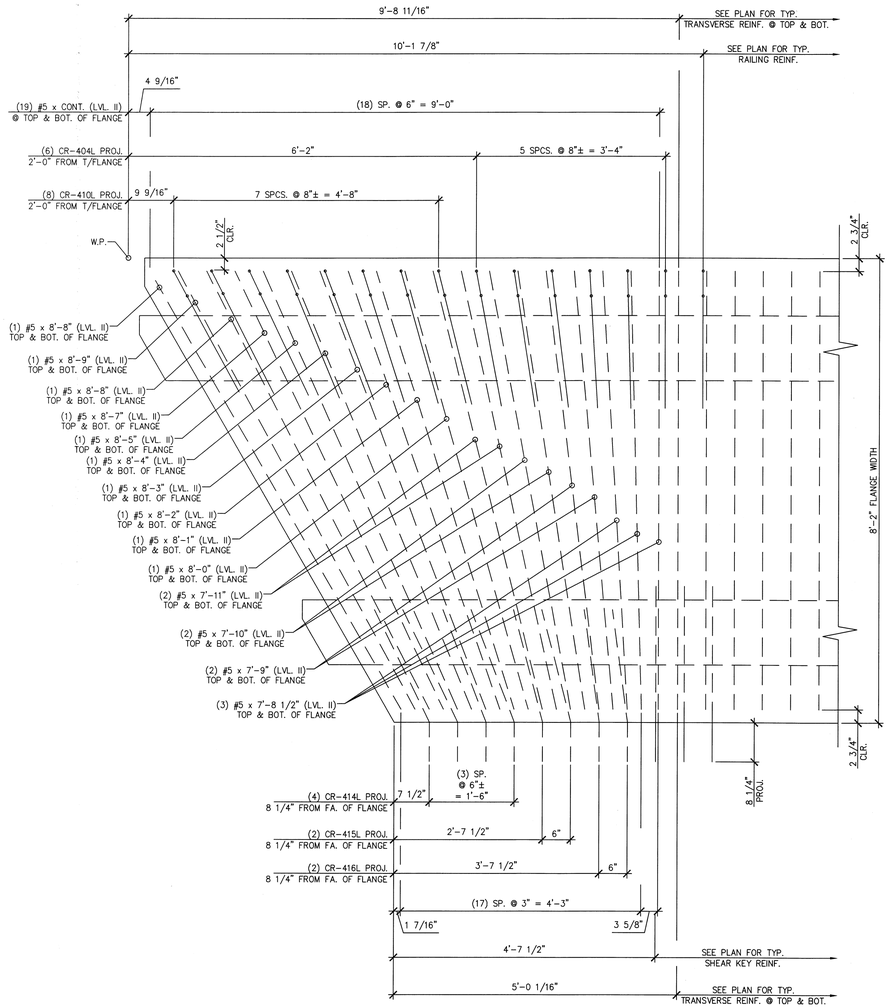

A NB3.1 BEAM END TRANSVERSE REINFORCING

3/4" = 1'-0"

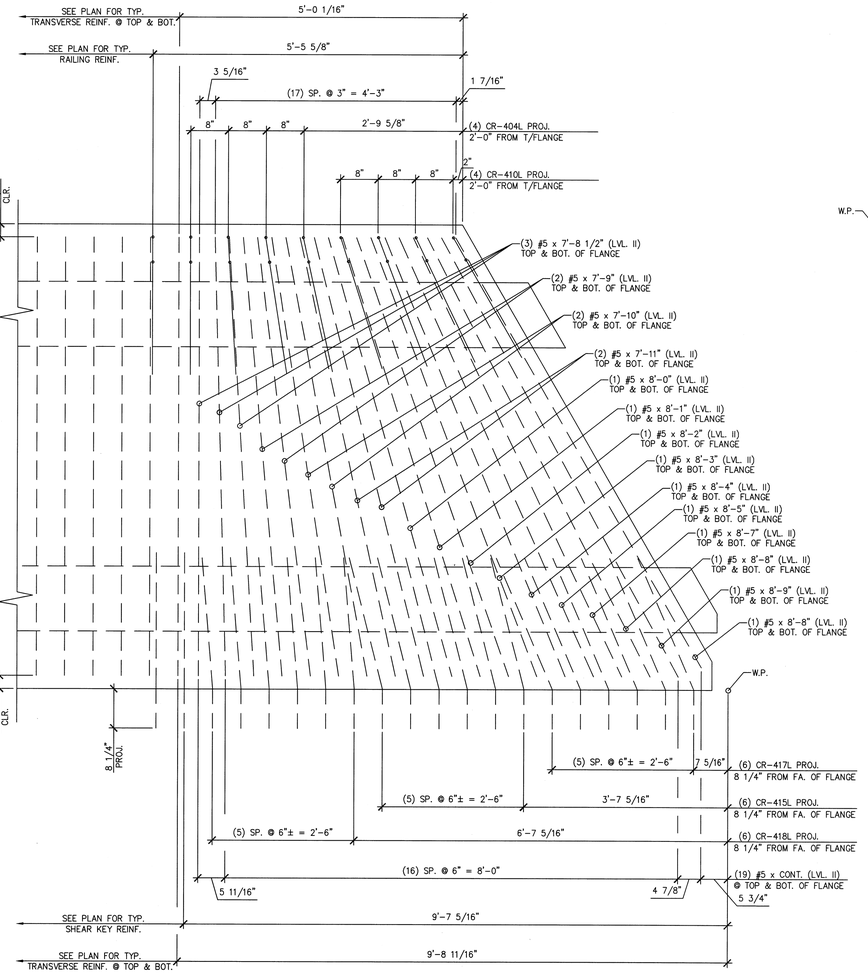

B NB3.1 BEAM END TRANSVERSE REINFORCING

3/4" = 1'-0"

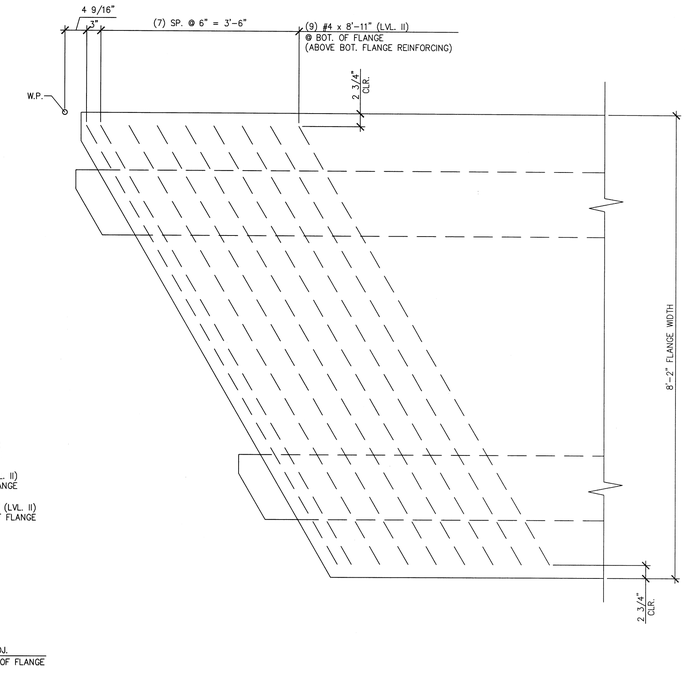

C NB3.1 ADDITIONAL TRANSVERSE REINFORCING AT BOTTOM OF FLANGE

3/4" = 1'-0"

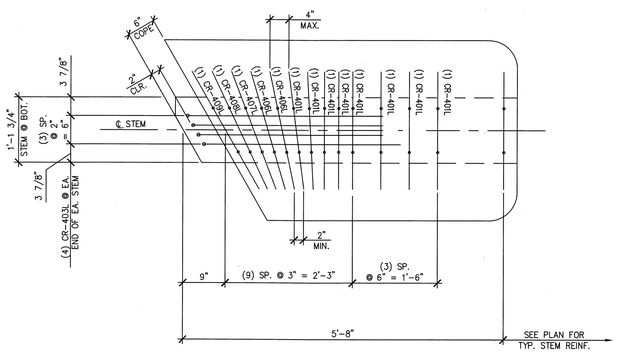

D NB3.1 BEAM END TRANSVERSE REINFORCING

3/4" = 1'-0"

APPROVAL STAMP:

J.P. CARRARA & SONS INC.
Precast & Prestress Manufacturer
2464 CASE STR., MIDDLEBURY, VERMONT 05753 Phone:(802)388-6361 Fax:(802)388-9010

AUSTIN CONSTRUCTION, INC.
CONTRACTOR
CONCORD, VERMONT

STATE OF VERMONT AGENCY OF TRANSPORTATION
COUNTY OF ORANGE

TOWN OF CORINTH
CHICKEN FARM ROAD T.H.16 CLASS 3 LOCAL ROAD
BRIDGE NO.: 36 PROJECT NO.: BRO 1447 (29)

PRESTRESSED NEXT BEAM DETAILS

DATE:	FEB. 11, 2015
SCALE:	NOTED
CHKD: RM	DFTM: PSS
JOB NO:	23448-014
DWG. NO:	NB3.1

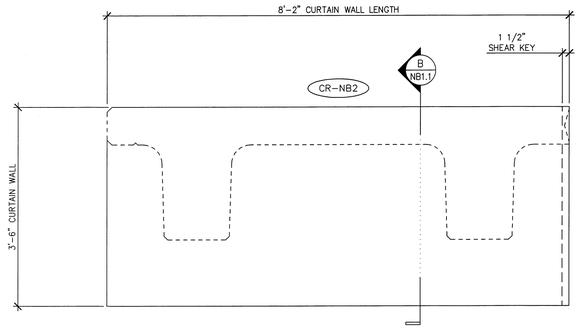

1 NB3.2 CURTAIN WALL DIMENSIONAL ELEVATION

VOL.: 1.54 cy
WT.: 3.12 T

3/4" = 1'-0"

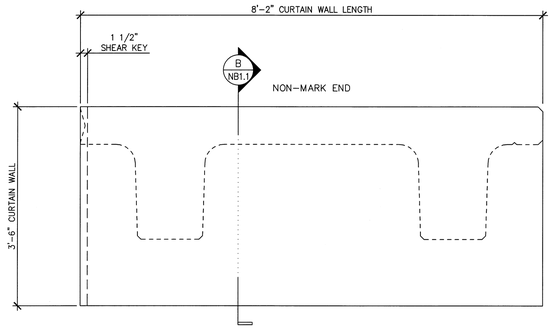

3 NB3.2 CURTAIN WALL DIMENSIONAL ELEVATION

VOL.: 1.54 cy
WT.: 3.12 T

3/4" = 1'-0"

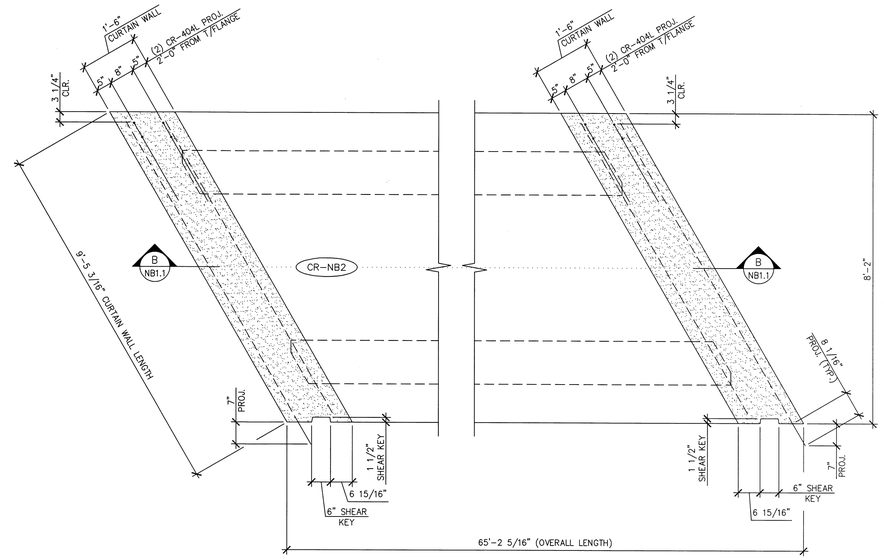

5 NB3.2 CURTAIN WALL DIMENSIONAL PLAN

1/2" = 1'-0"

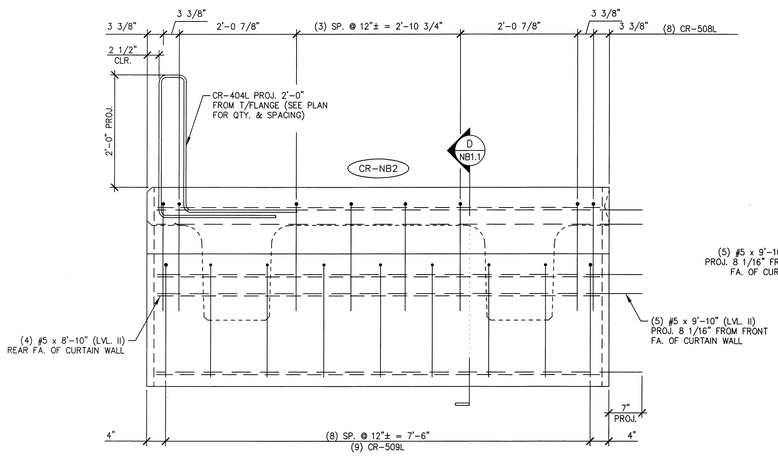

2 NB3.2 CURTAIN WALL REINFORCING ELEVATION

3/4" = 1'-0"

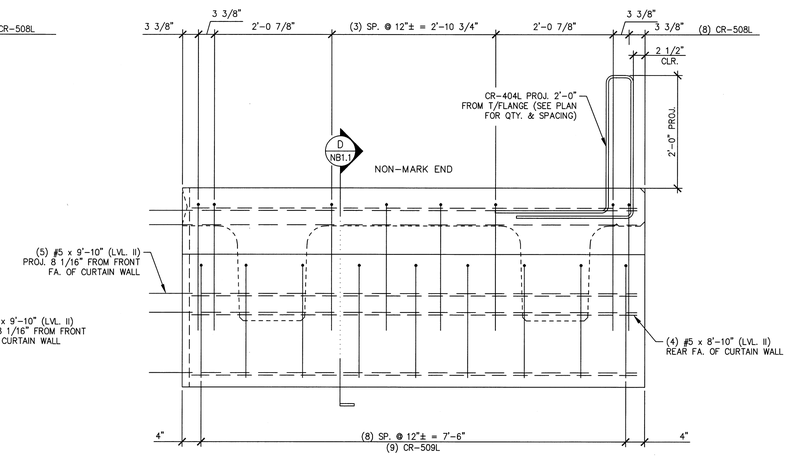

4 NB3.2 CURTAIN WALL REINFORCING ELEVATION

3/4" = 1'-0"

44.27 T = NEXT BEAM
3.12 T = CURTAIN WALL (MARK END)
3.12 T = CURTAIN WALL (NON-MARK END)
50.51 T = TOTAL BEAM WT.

MARK: CR-NB2 | QTY.: 1

MATERIAL LIST / CURTAIN WALL

ITEM	MARK	DESCRIPTION	QTY./CURTAIN WALL	
			MARK END	NON-MARK END
1	CR-404L	#4 BENT BAR (LEVEL II, DUAL COATED)	2	2
2	CR-508L	#5 BENT BAR (LEVEL II, DUAL COATED)	8	8
3	CR-509L	#5 BENT BAR (LEVEL II, DUAL COATED)	9	9
4				
5		#5 x 9'-10" (LVL. II, DUAL COATED)	5	5
6		#5 x 8'-10" (LVL. II, DUAL COATED)	4	4
7				
8				
9				
10				

APPROVAL STAMP:

J.P. CARRARA & SONS INC.
Precast & Prestress Manufacturer
2464 CASE STR., MIDDLEBURY, VERMONT 05753 Phone:(802)388-6361 Fax:(802)388-9010

AUSTIN CONSTRUCTION, INC.
CONTRACTOR
CONCORD, VERMONT

STATE OF VERMONT AGENCY OF TRANSPORTATION
COUNTY OF ORANGE

TOWN OF CORINTH
CHICKEN FARM ROAD T.H.16 CLASS 3 LOCAL ROAD
BRIDGE NO.: 36 PROJECT NO.: BRO 1447 (29)

PRECAST CURTAIN WALL DETAILS

DATE: FEB. 11, 2015
SCALE: NOTED
CHKD: RM DFTM: PSS
JOB NO: 23448-014
DWG. NO: NB3.2

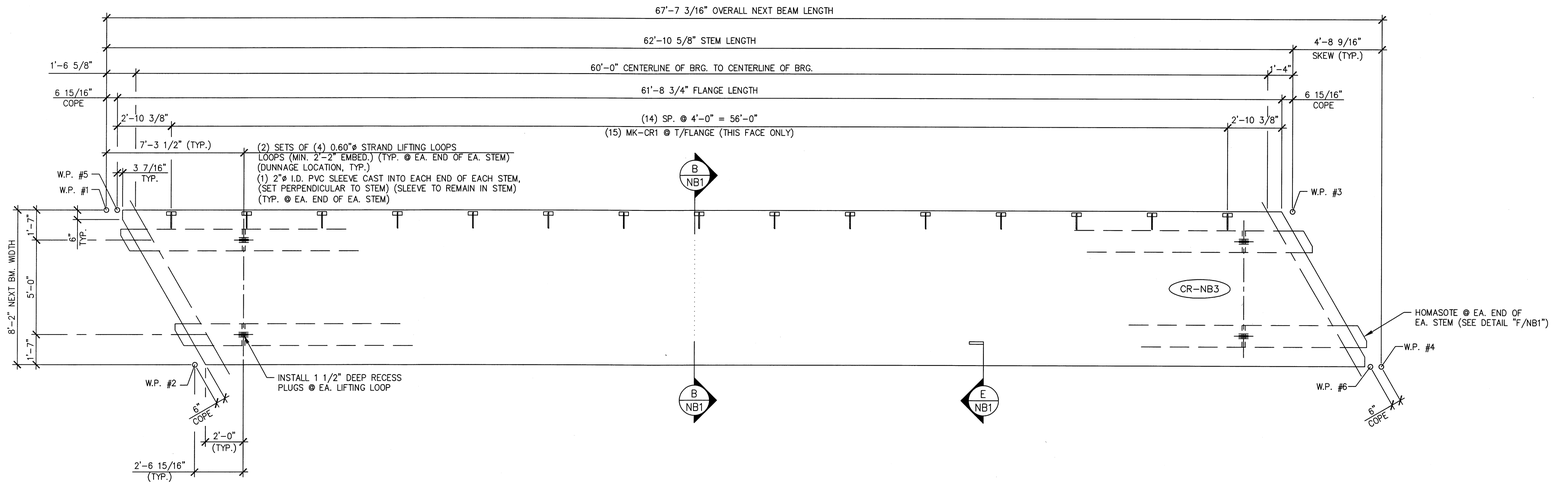

1 NB4 DIMENSIONAL PLAN VIEW IN FORM

1/4" = 1'-0"

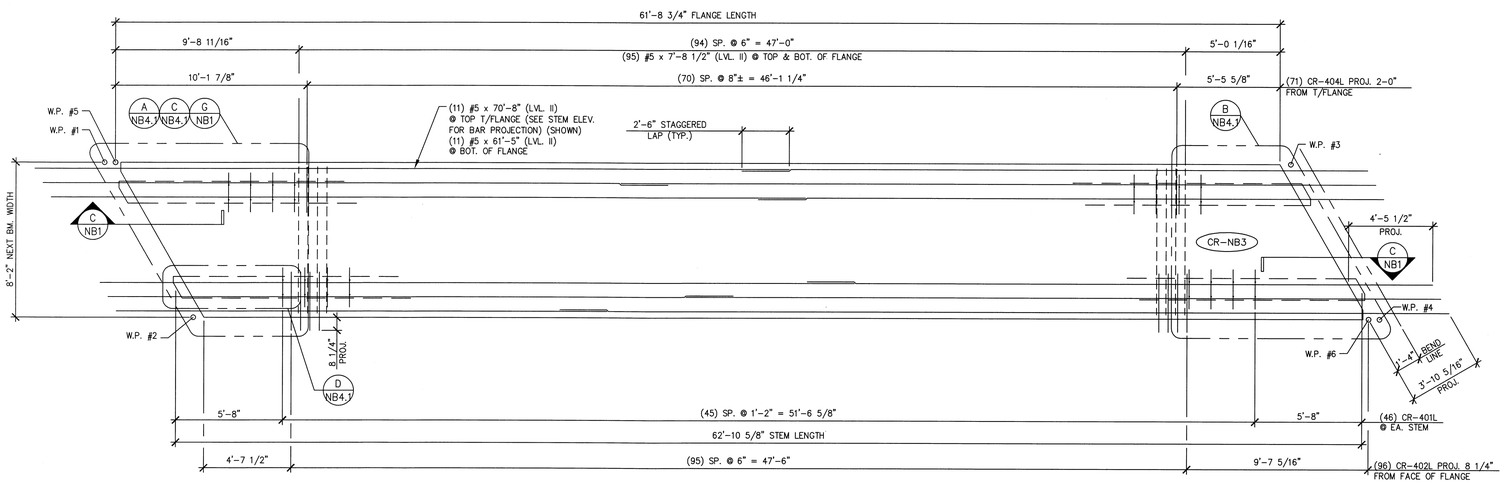

2 NB4 REINFORCING PLAN VIEW IN FORM

1/4" = 1'-0"

MARK: CR-NB2	QTY.: 1	WT.: 44.27 T	VOL.: 21.86 cy

MATERIAL LIST / NEXT BEAM

ITEM	MARK	DESCRIPTION	QTY.
1	CR-401L	#4 BENT BAR (LEVEL II, DUAL COATED)	124
2	CR-402L	#4 BENT BAR (LEVEL II, DUAL COATED)	96
3	CR-403L	#4 BENT BAR (LEVEL II, DUAL COATED)	16
4	CR-404L	#4 BENT BAR (LEVEL II, DUAL COATED)	81
5	CR-405L	#4 BENT BAR (LEVEL II, DUAL COATED)	16
6	CR-406L	#4 BENT BAR (LEVEL II, DUAL COATED)	8
7	CR-407L	#4 BENT BAR (LEVEL II, DUAL COATED)	4
8	CR-408L	#4 BENT BAR (LEVEL II, DUAL COATED)	4
9	CR-409L	#4 BENT BAR (LEVEL II, DUAL COATED)	4
10	CR-410L	#4 BENT BAR (LEVEL II, DUAL COATED)	12
11	CR-414L	#4 BENT BAR (LEVEL II, DUAL COATED)	4
12	CR-415L	#4 BENT BAR (LEVEL II, DUAL COATED)	8
13	CR-416L	#4 BENT BAR (LEVEL II, DUAL COATED)	2
14	CR-417L	#4 BENT BAR (LEVEL II, DUAL COATED)	6
15	CR-418L	#4 BENT BAR (LEVEL II, DUAL COATED)	6
16	CR-501L	#5 BENT BAR (LEVEL II, DUAL COATED)	2
17	CR-502L	#5 BENT BAR (LEVEL II, DUAL COATED)	2
18	CR-503L	#5 BENT BAR (LEVEL II, DUAL COATED)	2
19	CR-504L	#5 BENT BAR (LEVEL II, DUAL COATED)	2
20	CR-505L	#5 BENT BAR (LEVEL II, DUAL COATED)	2
21	CR-506L	#5 BENT BAR (LEVEL II, DUAL COATED)	2
22	CR-507L	#5 BENT BAR (LEVEL II, DUAL COATED)	2
23			
24		#4 x 8'-11" (LEVEL II, DUAL COATED)	18
25		#5 x 7'-8 1/2" (LEVEL II, DUAL COATED)	202
26		#5 x 7'-9" (LEVEL II, DUAL COATED)	8
27		#5 x 7'-10" (LEVEL II, DUAL COATED)	8
28		#5 x 7'-11" (LEVEL II, DUAL COATED)	8
29		#5 x 8'-0" (LEVEL II, DUAL COATED)	4
30		#5 x 8'-1" (LEVEL II, DUAL COATED)	4
31		#5 x 8'-2" (LEVEL II, DUAL COATED)	4
32		#5 x 8'-3" (LEVEL II, DUAL COATED)	4
33		#5 x 8'-4" (LEVEL II, DUAL COATED)	4
34		#5 x 8'-5" (LEVEL II, DUAL COATED)	4
35		#5 x 8'-7" (LEVEL II, DUAL COATED)	4
36		#5 x 8'-8" (LEVEL II, DUAL COATED)	8
37		#5 x 8'-9" (LEVEL II, DUAL COATED)	4
38		#5 x 70'-8" (W/ (1) 2'-6" STAGGERED LAP) (40' + 33'-2") (LVL. II, DUAL COATED)	11
39		#5 x 61'-5" (W/ (1) 2'-6" STAGGERED LAP) (40' + 23'-11") (LVL. II, DUAL COATED)	11
40			
41	MK-CR1	MODIFIED UNIVERSAL 4APR DECK FORM HANGER 45° (GALV.) (20" LG.)	15
42		2"ø I.D. PVC SLEEVE	4
43		SET OF (4) 0.60"ø x 270 KSI STRAND LIFTING LOOPS	4

APPROVAL STAMP:

J.P. CARRARA & SONS INC.
Precast & Prestress Manufacturer
2464 CASE STR., MIDDLEBURY, VERMONT 05753 Phone:(802)388-6361 Fax:(802)388-9010

AUSTIN CONSTRUCTION, INC.
CONTRACTOR
CONCORD, VERMONT

STATE OF VERMONT AGENCY OF TRANSPORTATION
COUNTY OF ORANGE

DATE: FEB. 11, 2015
SCALE: NOTED

TOWN OF CORINTH
CHICKEN FARM ROAD T.H.16 CLASS 3 LOCAL ROAD
BRIDGE NO.: 36 PROJECT NO.: BRO 1447 (29)

CHKD: RM DFTM: PSS
JOB NO: 23448-014

PRESTRESSED NEXT BEAM DETAILS

DWG. NO: NB4

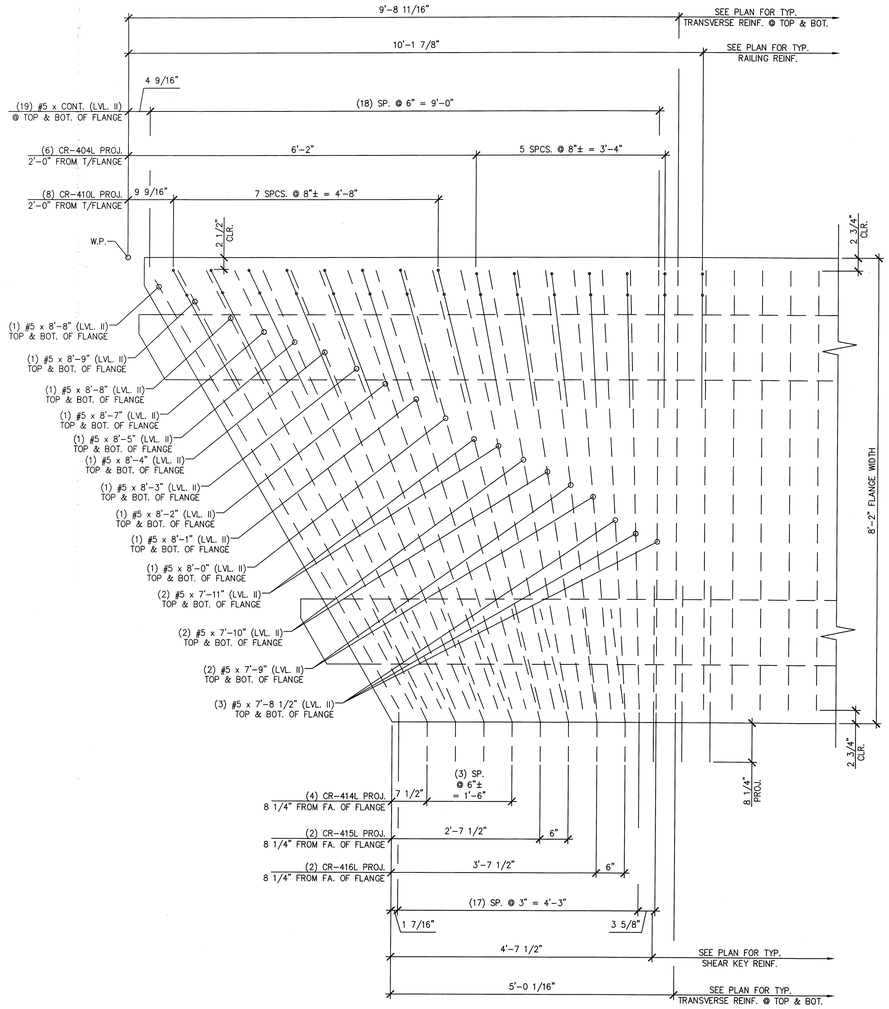

A NB4.1 BEAM END TRANSVERSE REINFORCING

3/4" = 1'-0"

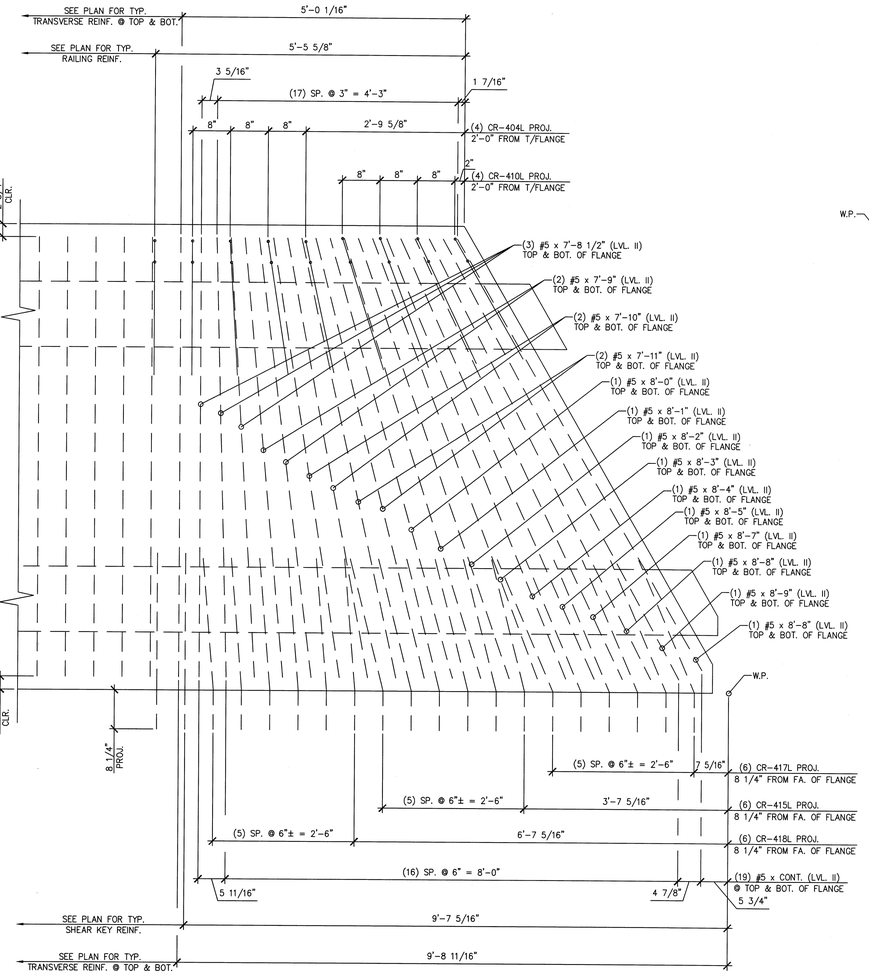

B NB4.1 BEAM END TRANSVERSE REINFORCING

3/4" = 1'-0"

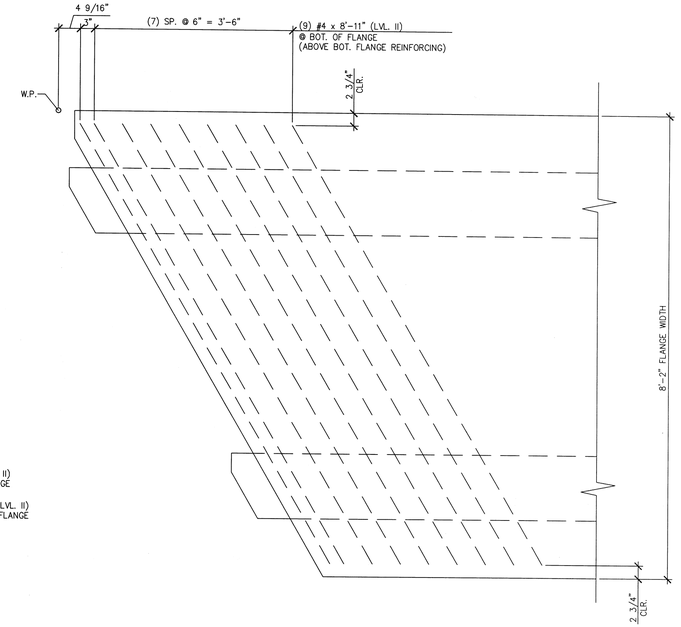

C NB4.1 ADDITIONAL TRANSVERSE REINFORCING AT BOTTOM OF FLANGE

3/4" = 1'-0"

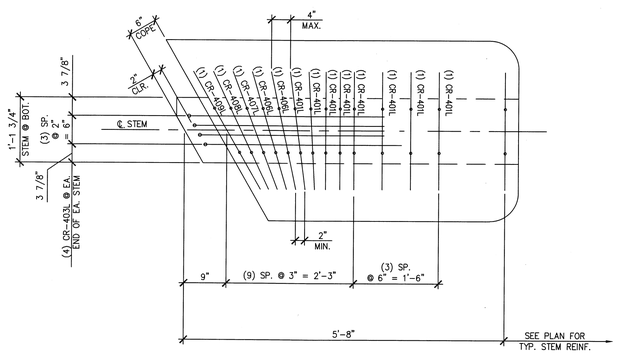

D NB4.1 BEAM END TRANSVERSE REINFORCING

3/4" = 1'-0"

APPROVAL STAMP:

J.P. CARRARA & SONS INC.
Precast & Prestress Manufacturer
2464 CASE STR., MIDDLEBURY, VERMONT 05753 Phone:(802)388-6361 Fax:(802)388-9010

AUSTIN CONSTRUCTION, INC.
CONTRACTOR
CONCORD, VERMONT

STATE OF VERMONT AGENCY OF TRANSPORTATION
COUNTY OF ORANGE

TOWN OF CORINTH
CHICKEN FARM ROAD T.H.16 CLASS 3 LOCAL ROAD
BRIDGE NO.: 36 PROJECT NO.: BRO 1447 (29)

PRESTRESSED NEXT BEAM DETAILS

DATE:	FEB. 11, 2015
SCALE:	NOTED
CHKD: RM	DFTM: PSS
JOB NO:	23448-014
DWG. NO:	NB4.1

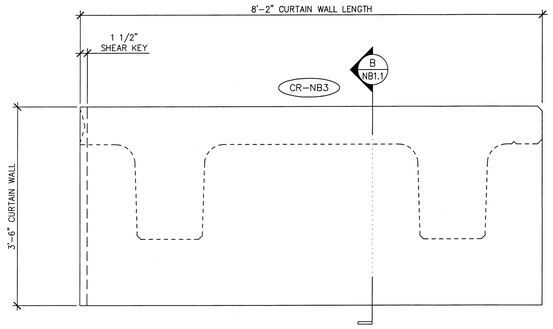

1 NB4.2 CURTAIN WALL DIMENSIONAL ELEVATION
VOL.: 1.54 cy
WT.: 3.12 T
3/4" = 1'-0"

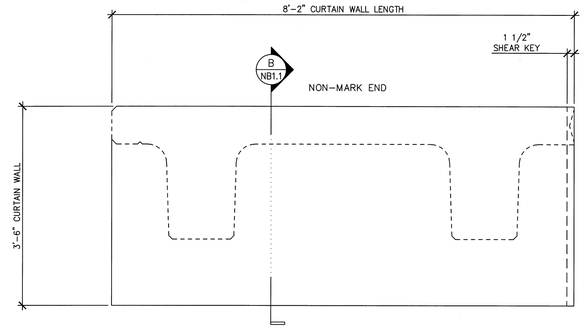

3 NB4.2 CURTAIN WALL DIMENSIONAL ELEVATION
VOL.: 1.54 cy
WT.: 3.12 T
3/4" = 1'-0"

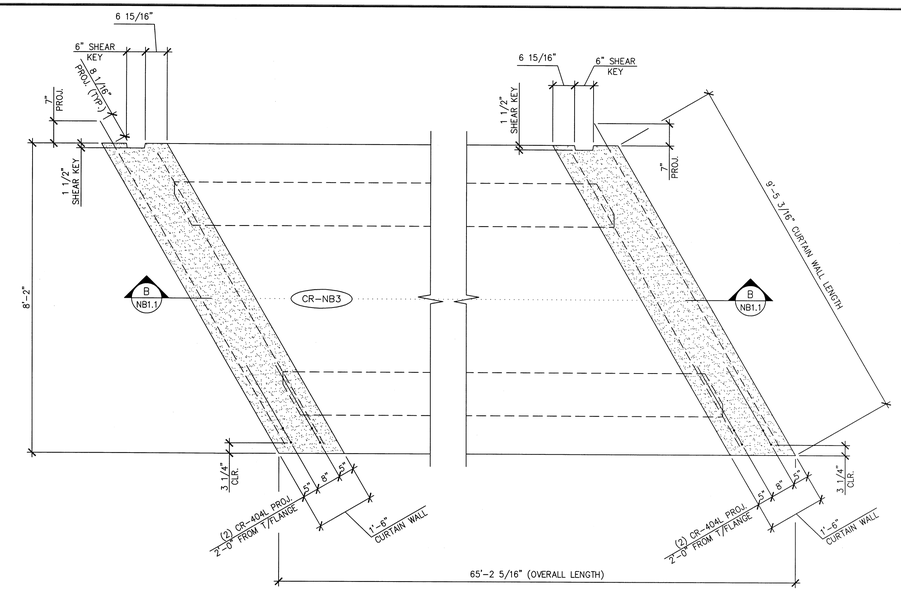

5 NB4.2 CURTAIN WALL DIMENSIONAL PLAN
1/2" = 1'-0"

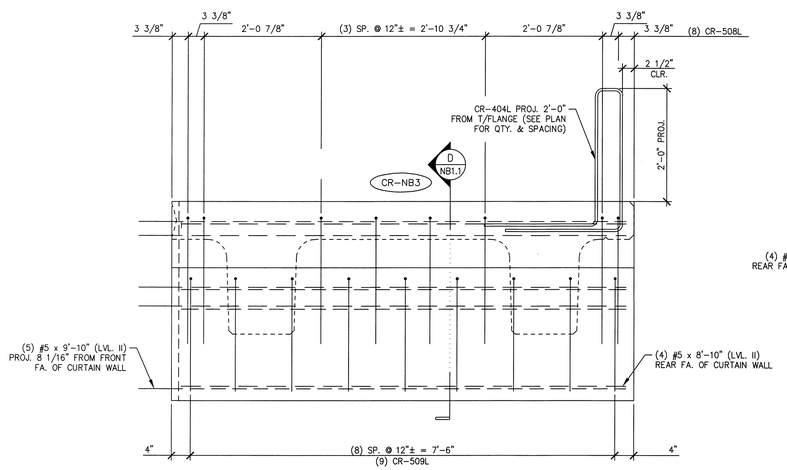

2 NB4.2 CURTAIN WALL REINFORCING ELEVATION
3/4" = 1'-0"

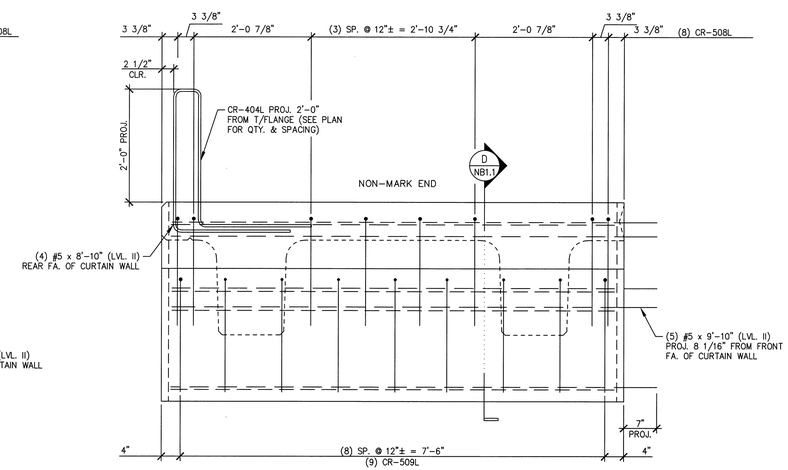

4 NB4.2 CURTAIN WALL REINFORCING ELEVATION
3/4" = 1'-0"

44.27 T = NEXT BEAM
3.12 T = CURTAIN WALL (MARK END)
3.12 T = CURTAIN WALL (NON-MARK END)
50.51 T = TOTAL BEAM WT.

MARK: CR-NB3 | QTY.: 1

MATERIAL LIST / CURTAIN WALL

ITEM	MARK	DESCRIPTION	QTY./CURTAIN WALL	
			MARK END	NON-MARK END
1	CR-404L	#4 BENT BAR (LEVEL II, DUAL COATED)	2	2
2	CR-508L	#5 BENT BAR (LEVEL II, DUAL COATED)	8	8
3	CR-509L	#5 BENT BAR (LEVEL II, DUAL COATED)	9	9
4				
5		#5 x 9'-10" (LVL. II, DUAL COATED)	5	5
6		#5 x 8'-10" (LVL. II, DUAL COATED)	4	4
7				
8				
9				
10				

APPROVAL STAMP:

J.P. CARRARA & SONS INC.
Precast & Prestress Manufacturer
2464 OAKE STR., MIDDLEBURY, VERMONT 05753 Phone:(802)388-6361 Fax:(802)388-9010

AUSTIN CONSTRUCTION, INC.
CONTRACTOR
CONCORD, VERMONT

STATE OF VERMONT AGENCY OF TRANSPORTATION
COUNTY OF ORANGE

TOWN OF CORINTH
CHICKEN FARM ROAD T.H.16 CLASS 3 LOCAL ROAD
BRIDGE NO.: 36 PROJECT NO.: BRO 1447 (29)

PRECAST CURTAIN WALL DETAILS

DATE: FEB. 11, 2015
SCALE: NOTED
CHKD: RM DFTM: PSS
JOB NO: 23448-014
DWG. NO: NB4.2

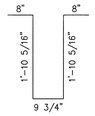

CR-401L
#4 BENT BAR
LEVEL II (DUAL COATED)
USE 2"ø [50 mm] PIN
(372) REQ'D.

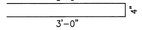

CR-402L
#4 BENT BAR
LEVEL II (DUAL COATED)
USE 2"ø [50 mm] PIN
(386) REQ'D.

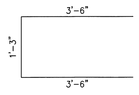

CR-403L
#4 BENT BAR
LEVEL II (DUAL COATED)
USE 2"ø [50 mm] PIN
(48) REQ'D.

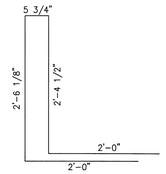

CR-404L
#4 BENT BAR
LEVEL II (DUAL COATED)
USE 2"ø [50 mm] PIN
(170) REQ'D.

CR-405L
#4 BENT BAR
LEVEL II (DUAL COATED)
USE 2"ø [50 mm] PIN
(48) REQ'D.

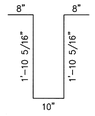

CR-406L
#4 BENT BAR
LEVEL II (DUAL COATED)
USE 2"ø [50 mm] PIN
(24) REQ'D.

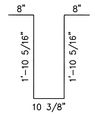

CR-407L
#4 BENT BAR
LEVEL II (DUAL COATED)
USE 2"ø [50 mm] PIN
(12) REQ'D.

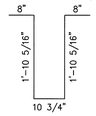

CR-408L
#4 BENT BAR
LEVEL II (DUAL COATED)
USE 2"ø [50 mm] PIN
(12) REQ'D.

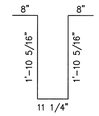

CR-409L
#4 BENT BAR
LEVEL II (DUAL COATED)
USE 2"ø [50 mm] PIN
(12) REQ'D.

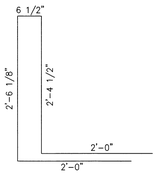

CR-410L
#4 BENT BAR
LEVEL II (DUAL COATED)
USE 2"ø [50 mm] PIN
(24) REQ'D.

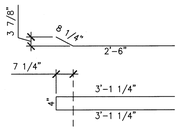

CR-411L
#4 BENT BAR
LEVEL II (DUAL COATED)
USE 2"ø [50 mm] PIN
(12) REQ'D.

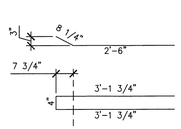

CR-412L
#4 BENT BAR
LEVEL II (DUAL COATED)
USE 2"ø [50 mm] PIN
(12) REQ'D.

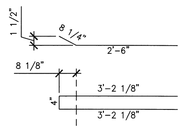

CR-413L
#4 BENT BAR
LEVEL II (DUAL COATED)
USE 2"ø [50 mm] PIN
(10) REQ'D.

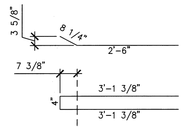

CR-414L
#4 BENT BAR
LEVEL II (DUAL COATED)
USE 2"ø [50 mm] PIN
(16) REQ'D.

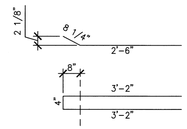

CR-415L
#4 BENT BAR
LEVEL II (DUAL COATED)
USE 2"ø [50 mm] PIN
(20) REQ'D.

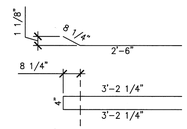

CR-416L
#4 BENT BAR
LEVEL II (DUAL COATED)
USE 2"ø [50 mm] PIN
(10) REQ'D.

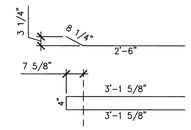

CR-417L
#4 BENT BAR
LEVEL II (DUAL COATED)
USE 2"ø [50 mm] PIN
(12) REQ'D.

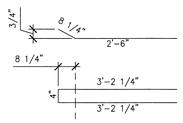

CR-418L
#4 BENT BAR
LEVEL II (DUAL COATED)
USE 2"ø [50 mm] PIN
(12) REQ'D.

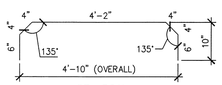

CR-501L
#5 BENT BAR
LEVEL II (DUAL COATED)
USE 2 3/4"ø [70 mm] PIN
(6) REQ'D.

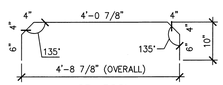

CR-502L
#5 BENT BAR
LEVEL II (DUAL COATED)
USE 2 3/4"ø [70 mm] PIN
(6) REQ'D.

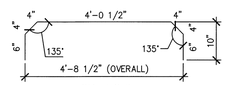

CR-503L
#5 BENT BAR
LEVEL II (DUAL COATED)
USE 2 3/4"ø [70 mm] PIN
(6) REQ'D.

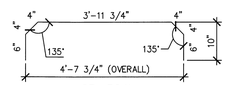

CR-504L
#5 BENT BAR
LEVEL II (DUAL COATED)
USE 2 3/4"ø [70 mm] PIN
(6) REQ'D.

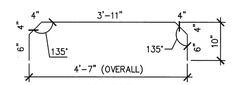

CR-505L
#5 BENT BAR
LEVEL II (DUAL COATED)
USE 2 3/4"ø [70 mm] PIN
(6) REQ'D.

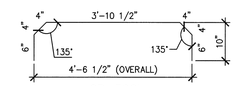

CR-506L
#5 BENT BAR
LEVEL II (DUAL COATED)
USE 2 3/4"ø [70 mm] PIN
(6) REQ'D.

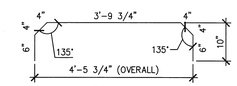

CR-507L
#5 BENT BAR
LEVEL II (DUAL COATED)
USE 2 3/4"ø [70 mm] PIN
(6) REQ'D.

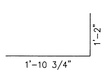

CR-508L
#5 BENT BAR
LEVEL II (DUAL COATED)
USE 2 3/4"ø [70 mm] PIN
(52) REQ'D.

(4) TO BE SHIPPED
LOOSE AT THE JOB SITE

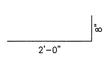

CR-509L
#5 BENT BAR
LEVEL II (DUAL COATED)
USE 2 3/4"ø [70 mm] PIN
(58) REQ'D.

(4) TO BE SHIPPED
LOOSE AT THE JOB SITE

PRESTRESSED NEXT BEAMS

NEXT BEAM & CURTAIN WALL MISCELLANEOUS MATERIALS

ITEM	MARK	QTY.	DESCRIPTION	REMARKS
1		54	#4 x 8'-11" (LEVEL II, DUAL COATED)	
2				
3		606	#5 x 7'-8 1/2" (LEVEL II, DUAL COATED)	
4		24	#5 x 7'-9" (LEVEL II, DUAL COATED)	
5		24	#5 x 7'-10" (LEVEL II, DUAL COATED)	
6		24	#5 x 7'-11" (LEVEL II, DUAL COATED)	
7		12	#5 x 8'-0" (LEVEL II, DUAL COATED)	
8		12	#5 x 8'-1" (LEVEL II, DUAL COATED)	
9		12	#5 x 8'-2" (LEVEL II, DUAL COATED)	
10		12	#5 x 8'-3" (LEVEL II, DUAL COATED)	
11		12	#5 x 8'-4" (LEVEL II, DUAL COATED)	
12		12	#5 x 8'-5" (LEVEL II, DUAL COATED)	
13		12	#5 x 8'-7" (LEVEL II, DUAL COATED)	
14		24	#5 x 8'-8" (LEVEL II, DUAL COATED)	
15		12	#5 x 8'-9" (LEVEL II, DUAL COATED)	
16		26	#5 x 8'-10" (LEVEL II, DUAL COATED)	
17		20	#5 x 9'-10" (LEVEL II, DUAL COATED)	
18		8	#5 x 10'-9" (LEVEL II, DUAL COATED)	
19		33	#5 x 70'-8" (W/ (1) 2'-6" STAGGERED LAP) (40' + 33'-2") (LVL. II, DUAL COATED)	
20		33	#5 x 61'-5" (W/ (1) 2'-6" STAGGERED LAP) (40' + 23'-11") (LVL. II, DUAL COATED)	
21		8	#4 x 61'-6" (W/ (1) 2'-6" STAGGERED LAP) (LVL. II, DUAL COATED)	TO BE SHIPPED LOOSE AT THE JOBSITE
22				
23				
24				
25				
26				
27				
28				
29				
30				
31				
32				
33	MK-CR1	30	MODIFIED UNIVERSAL 4APR DECK FORM HANGER 45° (GALV.) (20" LG.)	
34		12	SET OF (4) 0.60"ø x 270 KSI STRAND LIFTING LOOPS	
35		12	2"ø I.D. PVC SLEEVE	
36				
37				
38				

APPROVAL STAMP:

J.P. CARRARA & SONS INC.
Precast & Prestress Manufacturer
2464 CASE STR., MIDDLEBURY, VERMONT 05753 Phone:(802)388-6361 Fax:(802)388-9010

AUSTIN CONSTRUCTION, INC.
CONTRACTOR
CONCORD, VERMONT

STATE OF VERMONT AGENCY OF TRANSPORTATION
COUNTY OF ORANGE

TOWN OF CORINTH
CHICKEN FARM ROAD T.H.16 CLASS 3 LOCAL ROAD
BRIDGE NO.: 36 PROJECT NO.: BRO 1447 (29)

MATERIALS LIST

DATE: FEB. 11, 2015
SCALE: NOTED
CHKD: RM DFTM: PSS
JOB NO: 23448-014
DWG. NO: M1