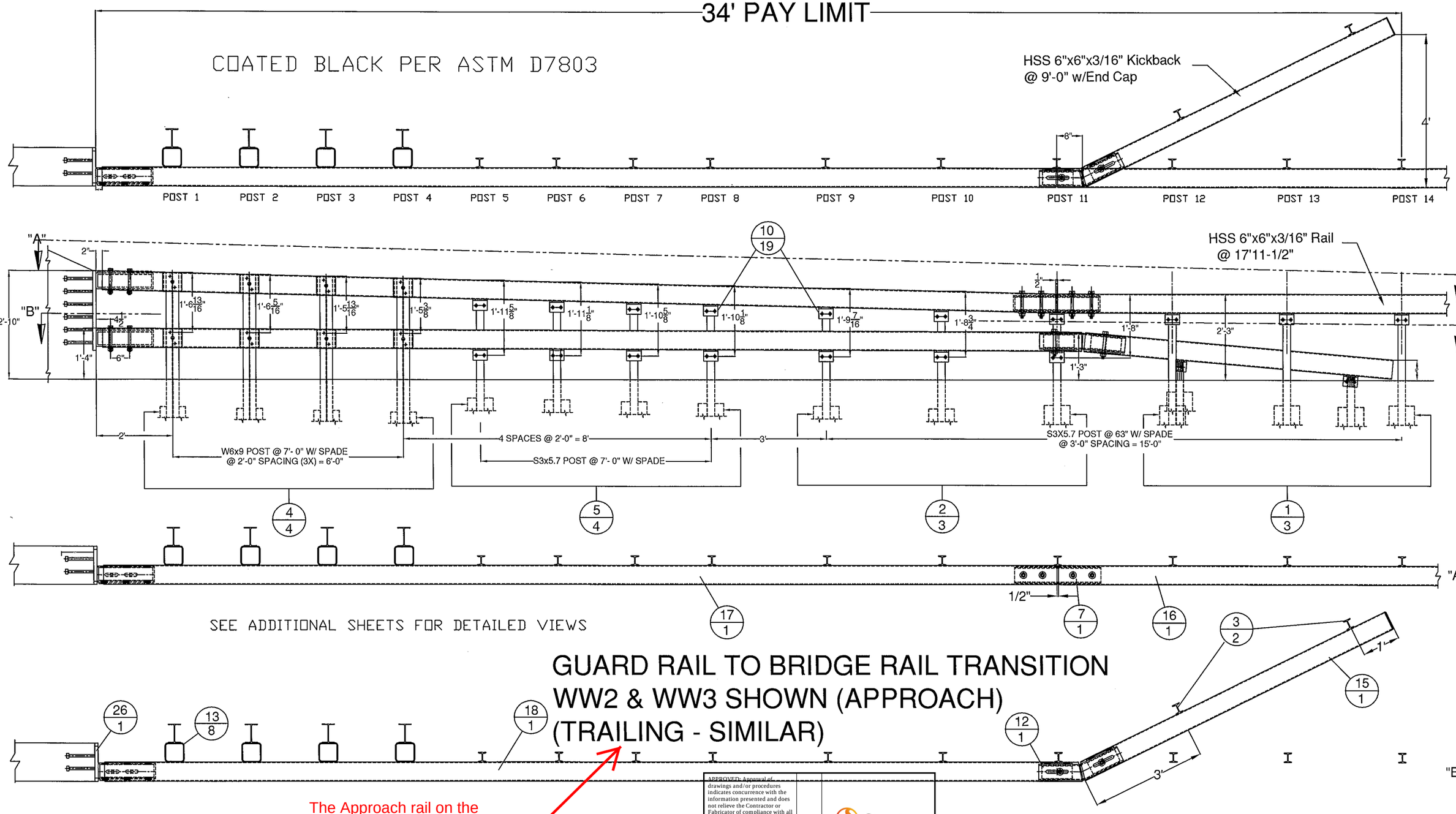

GUARD RAIL TO BRIDGE RAIL TRANSITION
WW2 & WW3 SHOWN (APPROACH)
(TRAILING - SIMILAR)

The Approach rail on the abutment 1 side of the bridge is curved. Please revise Shop drawings to reflect this.

APPROVED: Approval of drawings and/or procedures indicates concurrence with the information presented and does not relieve the Contractor or Fabricator of compliance with all specifications and code requirements		Stantec
APPROVED AS NOTED		
REVISE AND RESUBMIT	x	
NOT REVIEWED		
Date: 2/13/15		
By: George Bogue		

This review by Stantec Consulting Services Inc. is for the sole purpose of ascertaining conformance with the general design concept. This review shall not mean that Stantec Consulting Services Inc approves the detail design inherent in the shop drawings, responsibility for which shall remain with the Contractor. Submitting same, and such review shall not relieve the Contractor of his responsibility for errors or omissions in the shop drawing or of his responsibility for meeting all requirements of the Contract Documents. The contractor is responsible for dimensions to be confirmed and correlated at the job site, for information that pertains solely to the fabrication processes or to techniques of construction and installation and for coordination of the work of all subtrades.

ITEM #: 900.620

SHEET 1 OF 4

STRUCTURAL STEEL TO COMPLY W/ ASTM A6

TOLERANCE UNLESS OTHERWISE NOTED:
FRACTIONS = ± 1/16"
ANGLES = ± 1/2°
DIAMETERS = ± 1/32"

Galvanized 2-Rail Box Beam Guardrail Approach Section

EM14-202, CHICKEN FARM ROAD (T.H.16) CLASS 3 LOCAL ROAD, BRIDGE NO : 36
PROJECT: 618 CORINTH BRO 1447(29), TOWN OF CORINTH, ORANGE COUNTY, VT

REV	NO.	DATE	DESCRIPTION	BY	REV	NO.	DATE	DESCRIPTION	BY

ELDERLEE, INC.
OAKS CORNERS, NEW YORK 14518
E-Mail: dlong@elderlee.com / epeek@elderlee.com
Tel: 315-789-6670 Fax: 315-789-6615

AISC CERTIFIED FABRICATOR

DRAWN	E.P.	12/15/14
CHECKED	D.L.	12/16/14
APPROVED	M.V.	.
SCALE	SCHEMATIC	
DRAWING NO.	FR L - CORINTH-T	

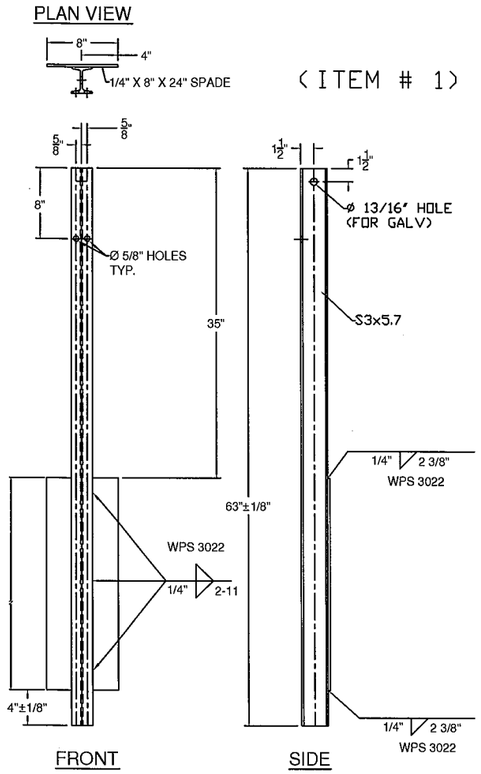

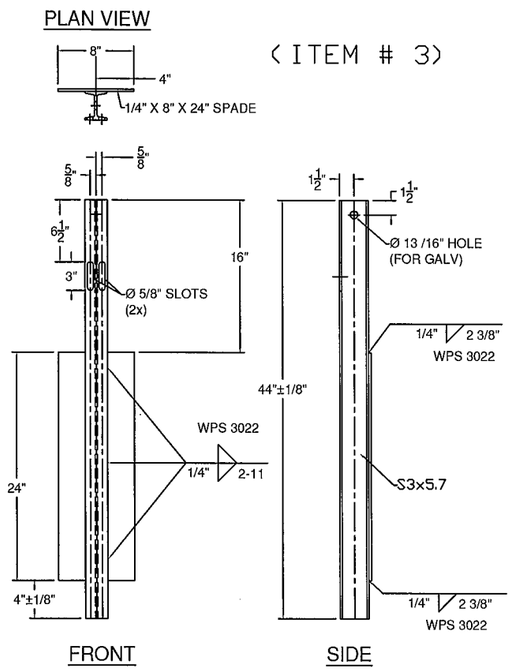

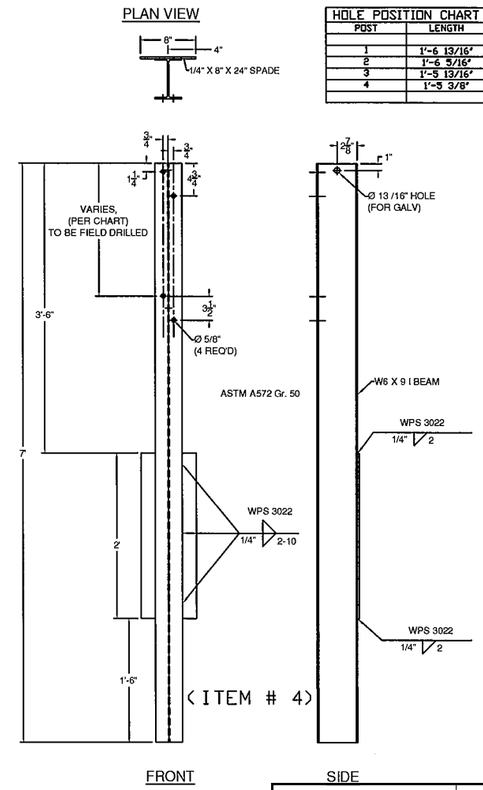

HOLE POSITION CHART

POST	LENGTH
1	1'-6 13/16"
2	1'-6 5/16"
3	1'-5 13/16"
4	1'-3 3/8"

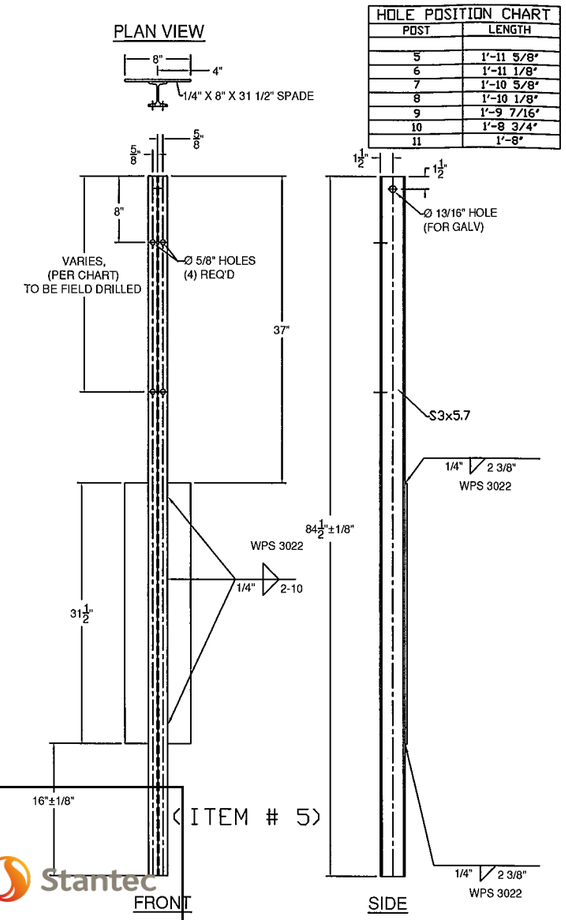

HOLE POSITION CHART

POST	LENGTH
5	1'-11 5/8"
6	1'-11 1/8"
7	1'-10 5/8"
8	1'-10 1/8"
9	1'-9 7/16"
10	1'-8 3/4"
11	1'-8"

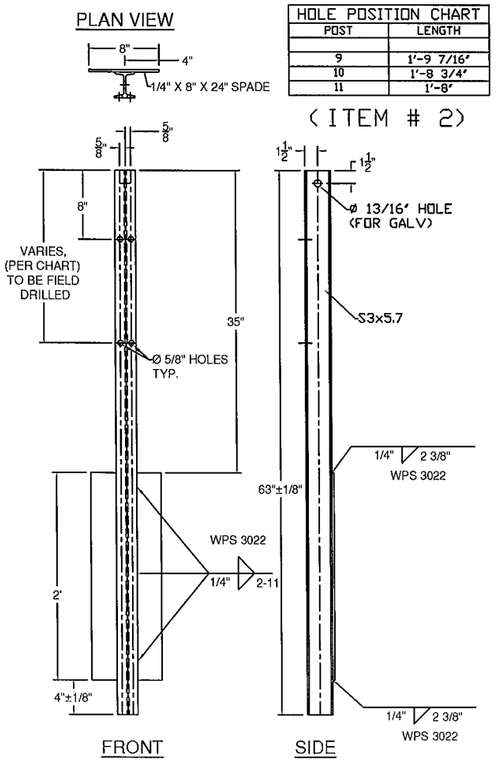

HOLE POSITION CHART

POST	LENGTH
9	1'-9 7/16"
10	1'-8 3/4"
11	1'-8"

GENERAL NOTES:

1) ALL RAILING IS TO BE FABRICATED AND ERECTED ACCORDING TO SECTION 525 OF THE STANDARD SPECIFICATIONS.
2) BOLTS SHALL BE TORQUED SNUG TIGHT (APPROXIMATELY 100 FT-LB).
3) PROTRUSIONS CAUSED BY WELDING OR GALVANIZING ARE NOT PERMITTED ON THE ADJOINING SURFACES OF THE BOX BEAM RAILS, SPLICE TUBES AND FILL PLATES.
4) BOX BEAM TUBE AND STEEL POST MATERIALS, DIMENSION SIZES AND NOTES SHALL BE THE SAME AS THOSE OF THE BRIDGE RAIL, UNLESS OTHERWISE NOTED.
5) ANY BENDING OF RAIL SHALL BE DONE AT THE FABRICATION PLANT. RADII GREATER THAN 16' TO BE CURVED ON A TUBE BENDING MACHINE, RADII LESS THAN 16' TO BE "PIE CUT" AND WELDED. CURVED RAILING WILL HAVE AN 18" LENGTH ON EACH END STRAIGHT TO ACCOMADATE SPLICES.
6) ALL STEEL COMPONENTS SHALL BE COATED BLACK IN ACCORDANCE WITH ASTM D7803 FOLLOWING GALVANIZING.

BILL OF MATERIALS, EACH CORNER

ITEM #	QTY.	COMPONENT #	DESCRIPTION	MATERIAL (ASTM)
1	3	0013.57021	3' I-POST, PUNCH 8' W/SPD @ 63' LG	ASTM A572 Gr. 50
2	3	0013.57025	3' I-POST W/SPD @ 63', PUNCH 8', & 20' & HOLES @ VARIOUS	ASTM A572 Gr. 50
3	2	0013.57060	3' I-END POST W/SPD @ 3'-8' LG	ASTM A572 Gr. 50
4	4	–	W6X9 POST @ 7' W/SPD & 5/8' HOLES @ VARIOUS	ASTM A572 Gr. 50
5	4	–	3' I-POST, PUNCH 8' & VARIOUS', W/8X32' SPADE @ 7'	ASTM A572 Gr. 50
7	1	0033.00640	HSS 5X5 TUBE SPLICE @ 27' LG W/ 1/4' SHIMS	A500 Gr. B / A572 Gr 50
10	19	0054.00050	REG BB SHELF ANGLES @ 4-1/2'	ASTM A36
12	1	–	HSS 5X5 DBL BEND TUBE SPL @ 27' LG	A500 Gr. B / A572 Gr 50
13	8		6X6' TRANS. TUBE B/O @ 6' LG	A500 Gr. B
15	1	0054.09000	6X6' BB @ 9'-0' KICKBACK, W/ CAP	A500 Gr. B / A36
*16	1	0054.18000	6X6' BB @ 17'-11 1/2', DRILL 3' CC	A500 Gr. B
*17	1	–	6X6' BB TOP TRANS @ 24'-9 3/4' LG W/EXP END	A500 Gr. B
*18	1	–	6X6' BB BTM TRANS @ 25'-5 1/2' LG W/EXP END	A500 Gr. B
19	18	0080.03355	3/8' X 7 1/2' BOLT, NUT, & 2 FW	A307, A563, F436
20	19	0080.04100	1/2' x 1-1/2' BOLT, NUT, & FW	A307, A563, F436
21	16	0080.04120	1/2' x 1-1/2' BOLT, NUT, 2 FW & LW	A307, A563, F436
23	10	0080.06340	3/4' X 7-1/2' BOLT, NUT, 2 FW	A325, A563, F436
24	8	0080.06370	3/4' X 8' CARR BOLT, NUT, FW & LW	A307, A563, F436

* WW1 - ITEMS 16, 17, & 18 - FACE OF RAIL TO HAVE 'TBD' CONVEX RADIUS
* WW2 - ITEMS 16, 17, & 18 - FACE OF RAIL TO HAVE 'TBD' CONVEX RADIUS

APPROVED: Approval of drawings and/or procedures indicates concurrence with the information presented and does not relieve the Contractor or Fabricator of compliance with all specifications and code requirements	X	
APPROVED AS NOTED		
REVISE AND RESUBMIT		
NOT REVIEWED		
Date: 2/13/15		
By: George Bogue		

This review by Stantec Consulting Services Inc. is for the sole purpose of ascertaining conformance with the general design concept. This review shall not mean that Stantec Consulting Services Inc approves the detail design inherent in the shop drawings, responsibility for which shall remain with the Contractor. Submitting same, and such review shall not relieve the Contractor of his responsibility for errors or omissions in the shop drawing or of his responsibility for meeting all requirements of the Contract Documents. The contractor is responsible for dimensions to be confirmed and correlated at the job site, for information that pertains solely to the fabrication processes or to techniques of construction and installation and for coordination of the work of all subtrades.

HARDWARE NOTES

ITEM #	FUNCTION
19	BOLT RAIL TO SHELF ANGLE (ITEM #10)
20	BOLT SHELF ANGLE (ITEM # 10) TO POST
21	BOLT BLOCK-OUTS (ITEM # 13) TO HEAVY POST (ITEM # 4)
23	SPLICE TUBING (ITEM #'S 7 & 12), & (4) PER PARAPET WALL CONNECTION
24	BOLT RAIL (ITEMS #'S 17, & 18 TO BLOCK-OUTS (ITEM # 13)

ITEM #: 900.620

SHEET 2 OF 4

STRUCTURAL STEEL TO COMPLY W/ ASTM A6

TOLERANCE UNLESS OTHERWISE NOTED:
FRACTIONS = ± 1/16"
ANGLES = ± 1/2°
DIAMETERS = ± 1/32"

Galvanized 2-Rail Box Beam Guardrail Approach Section

EM14-202, CHICKEN FARM ROAD (T.H.16) CLASS 3 LOCAL ROAD, BRIDGE NO : 36
PROJECT: 618 CORINTH BRO 1447(29), TOWN OF CORINTH, ORANGE COUNTY, VT

REV	NO.	DATE	DESCRIPTION	BY	REV	NO.	DATE	DESCRIPTION	BY

ELDERLEE, INC.
OAKS CORNERS, NEW YORK 14518
E-Mail: dlong@elderlee.com / epeek@elderlee.com
Tel: 315-789-6670 Fax: 315-789-6615

AISC CERTIFIED FABRICATOR

DRAWN	E.P.	12/15/14
CHECKED	D.L.	12/16/14
APPROVED	M.V.	.
SCALE	SCHEMATIC	
DRAWING NO.	FR L - CORINTH-T	

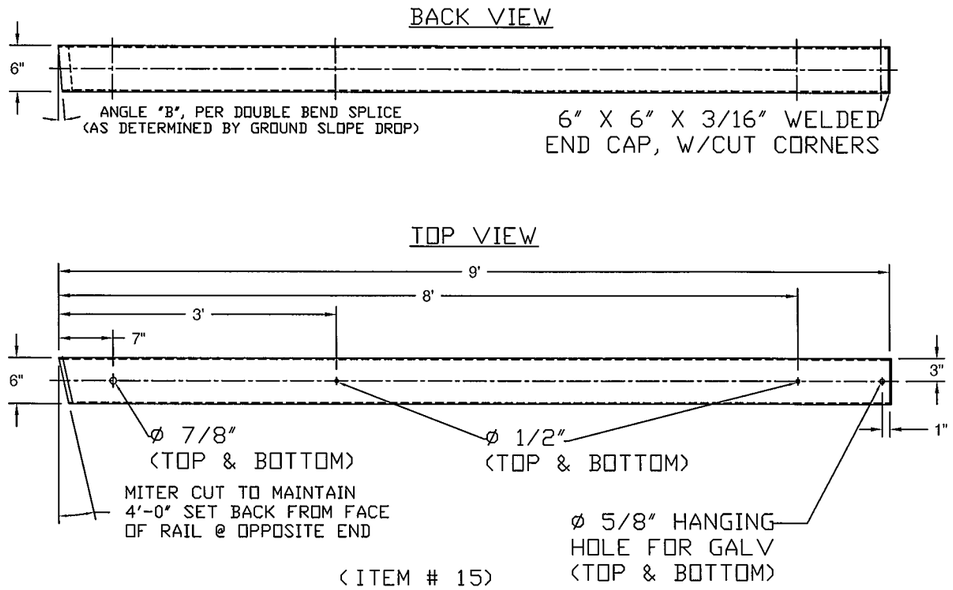

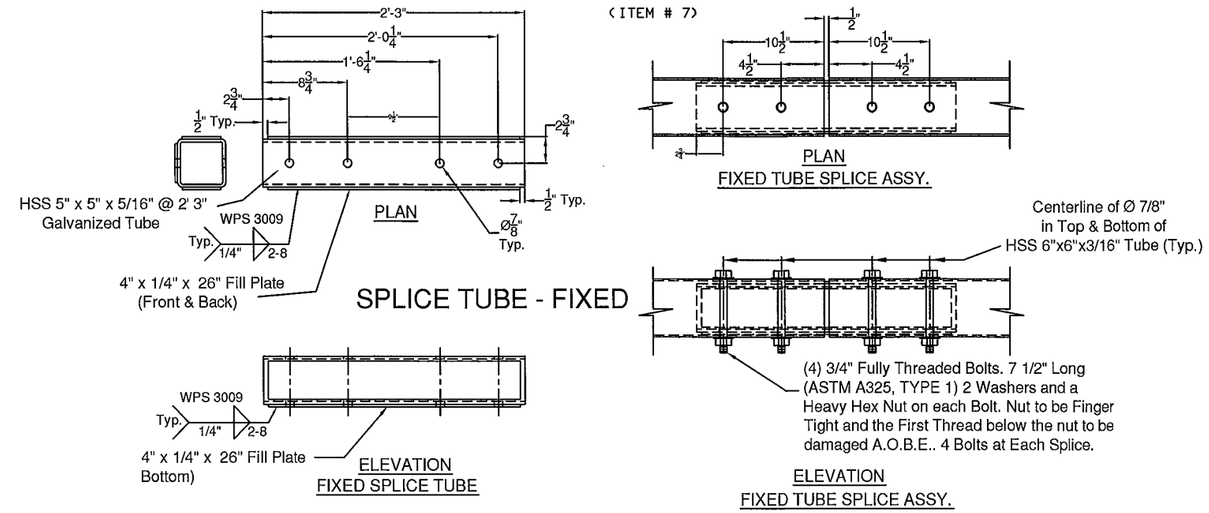

APPROVED: Approval of drawings and/or procedures indicates concurrence with the information presented and does not relieve the Contractor or Fabricator of compliance with all specifications and code requirements	X	Stantec
APPROVED AS NOTED		
REVISE AND RESUBMIT		
NOT REVIEWED		
Date: 2/13/15		
By: George Bogue		

This review by Stantec Consulting Services Inc. is for the sole purpose of ascertaining conformance with the general design concept. This review shall not mean that Stantec Consulting Services Inc approves the detail design inherent in the shop drawings, responsibility for which shall remain with the Contractor. Submitting same, and such review shall not relieve the Contractor of his responsibility for errors or omissions in the shop drawing or of his responsibility for meeting all requirements of the Contract Documents. The contractor is responsible for dimensions to be confirmed and correlated at the job site, for information that pertains solely to the fabrication processes or to techniques of construction and installation and for coordination of the work of all subtrades.

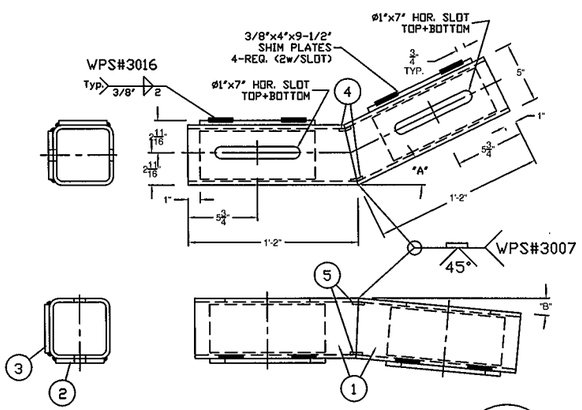

DOUBLE BEND TUBE SPLICE		
ITEM#	QTY.	DESCRIPTION
1	1	5" X 5" X 5/16" TUBE @ 26 3/4"
2	2	3/8" X 4" X 9 1/2" W/ SLOTS-ASTM A36/A709 Gr36/CVN
3	2	3/8" X 4" X 9 1/2" W/O SLOTS-ASTM A36/A709 Gr36/CVN
4	2	3/16" X 1" X 3 5/8" BACKER PLATE, FORMED
5	2	3/16" X 1" X 4" BACKER PLATE

"A" - SEE PLAN FOR TURN BACK DISTANCE, SET ANGLE ACCORDINGLY.(WW1-42°, WW2-28°, WW3-25°, WW4-25°)
"B" - TURN DOWN ANGLE SET BY THE 9" MEASURMENT AT THE END OF THE BOX BEAM.

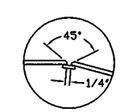

Welding Detail
WPS 3007

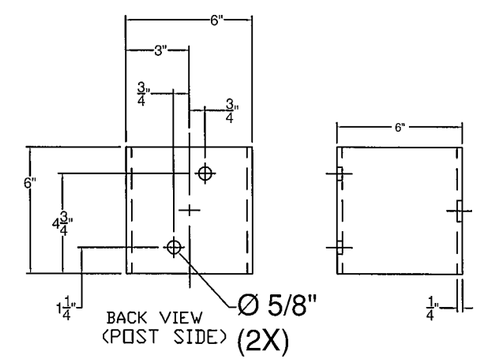

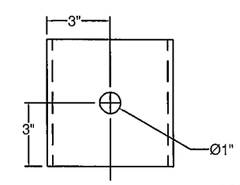

(ITEM # 13)

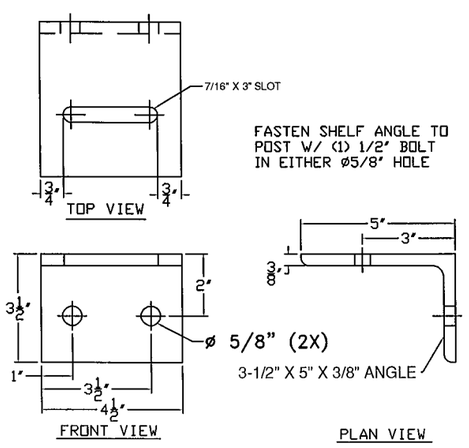

(ITEM # 10)

ITEM #: 900.620

SHEET 3 OF 4

STRUCTURAL STEEL TO COMPLY W/ ASTM A6

TOLERANCE UNLESS OTHERWISE NOTED:
FRACTIONS = ± 1/16"
ANGLES = ± 1/2°
DIAMETERS = ± 1/32"

Galvanized 2-Rail Box Beam Guardrail Approach Section

EM14-202, CHICKEN FARM ROAD (T.H.16) CLASS 3 LOCAL ROAD, BRIDGE NO : 36
PROJECT: 618 CORINTH BRO 1447(29), TOWN OF CORINTH, ORANGE COUNTY, VT

REV	NO.	DATE	DESCRIPTION	BY	REV	NO.	DATE	DESCRIPTION	BY

ELDERLEE, INC.
OAKS CORNERS, NEW YORK 14518
E-Mail: dlong@elderlee.com / epeek@elderlee.com
Tel: 315-789-6670 Fax: 315-789-6615

AISC CERTIFIED FABRICATOR

DRAWN	E.P.	12/15/14
CHECKED	D.L.	12/16/14
APPROVED	M.V.	.
SCALE	SCHEMATIC	
DRAWING NO.	FR L - CORINTH-T	

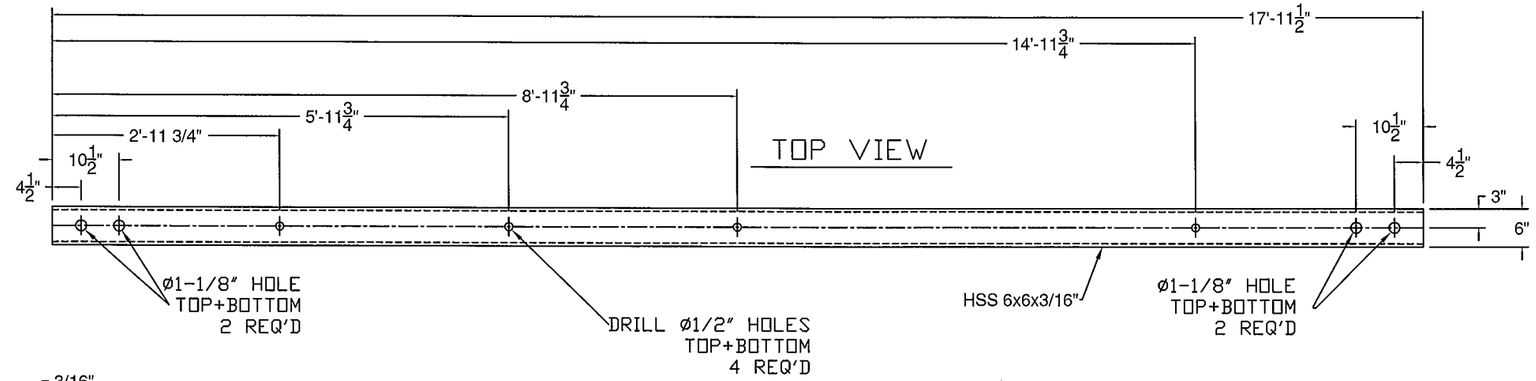

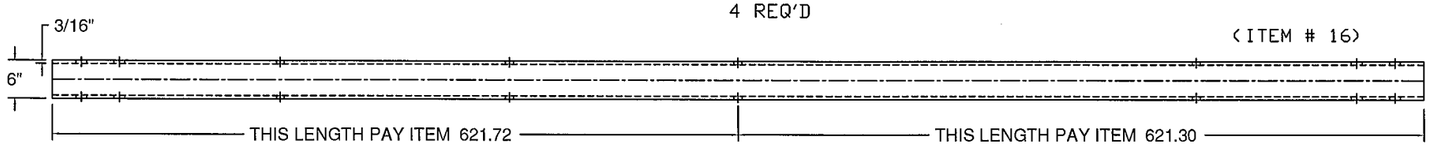

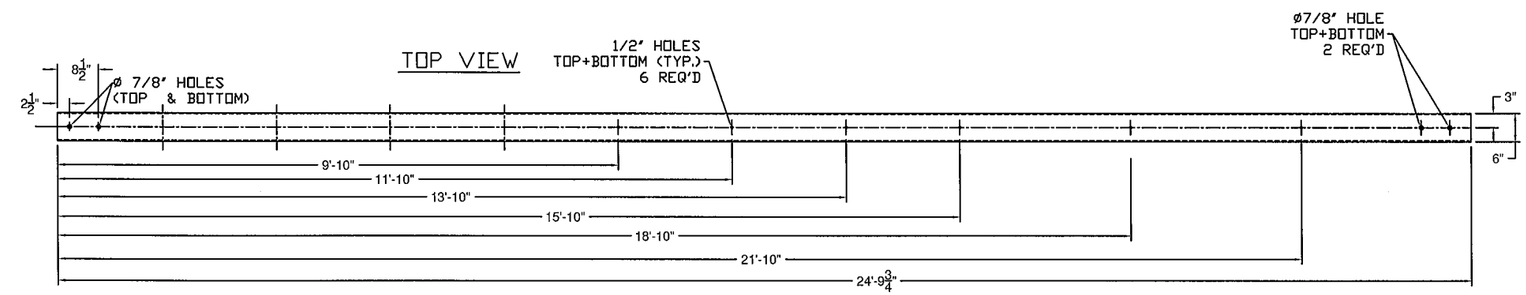

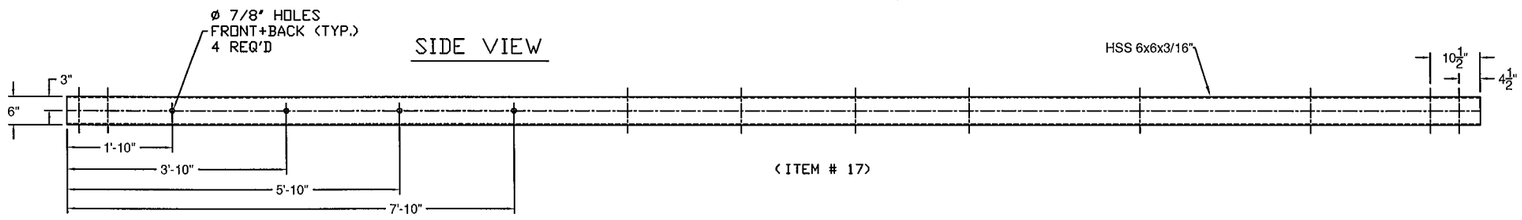

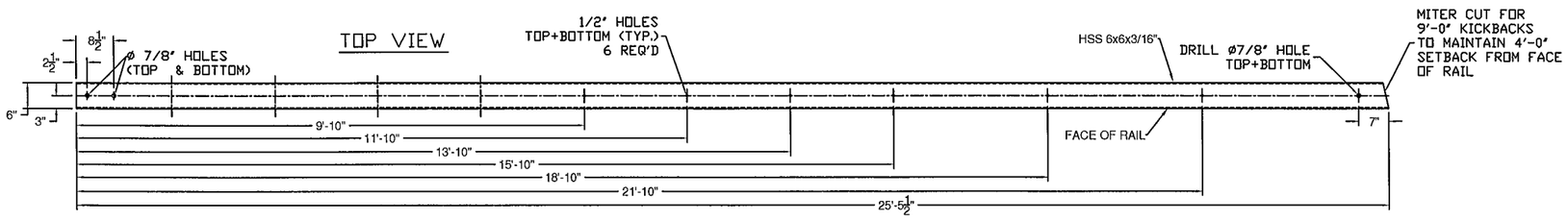

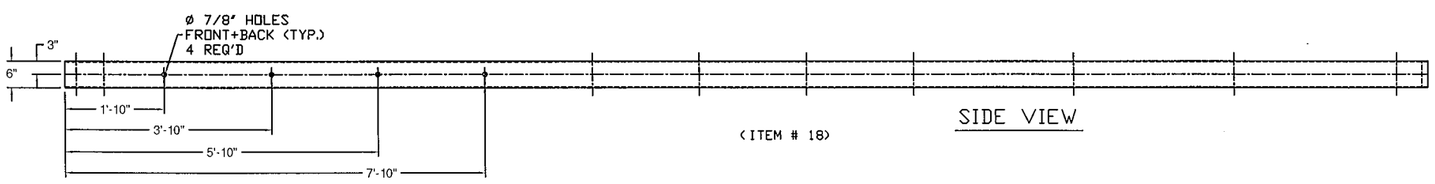

Please revise to include curved approach rail at abutment

APPROVED: Approval of drawings and/or procedures indicates concurrence with the information presented and does not relieve the Contractor or Fabricator of compliance with all specifications and code requirements		Stantec
APPROVED AS NOTED		
REVISE AND RESUBMIT	X	
NOT REVIEWED		
Date: 2/13/15		
By: George Bogue		

This review by Stantec Consulting Services Inc. is for the sole purpose of ascertaining conformance with the general design concept. This review shall not mean that Stantec Consulting Services Inc approves the detail design inherent in the shop drawings, responsibility for which shall remain with the Contractor. Submitting same, and such review shall not relieve the Contractor of his responsibility for errors or omissions in the shop drawing or of his responsibility for meeting all requirements of the Contract Documents. The contractor is responsible for dimensions to be confirmed and correlated at the job site, for information that pertains solely to the fabrication processes or to techniques of construction and installation and for coordination of the work of all subtrades.

ITEM #: 900.620

SHEET 4 OF 4

STRUCTURAL STEEL TO COMPLY W/ ASTM A6

TOLERANCE UNLESS OTHERWISE NOTED:
FRACTIONS = ± 1/16"
ANGLES = ± 1/2°
DIAMETERS = ± 1/32"

Galvanized 2-Rail Box Beam Guardrail Approach Section

EM14-202, CHICKEN FARM ROAD (T.H.16) CLASS 3 LOCAL ROAD, BRIDGE NO : 36
PROJECT: 618 CORINTH BRO 1447(29), TOWN OF CORINTH, ORANGE COUNTY, VT

REV	NO.	DATE	DESCRIPTION	BY	REV	NO.	DATE	DESCRIPTION	BY

ELDERLEE, INC.
OAKS CORNERS, NEW YORK 14518
E-Mail: dlong@elderlee.com / epeek@elderlee.com
Tel: 315-789-6670 Fax: 315-789-6615

AISC CERTIFIED FABRICATOR

DRAWN	E.P.	12/15/14
CHECKED	D.L.	12/16/14
APPROVED	M.V.	.
SCALE	SCHEMATIC	
DRAWING NO.	FR L - CORINTH-T	