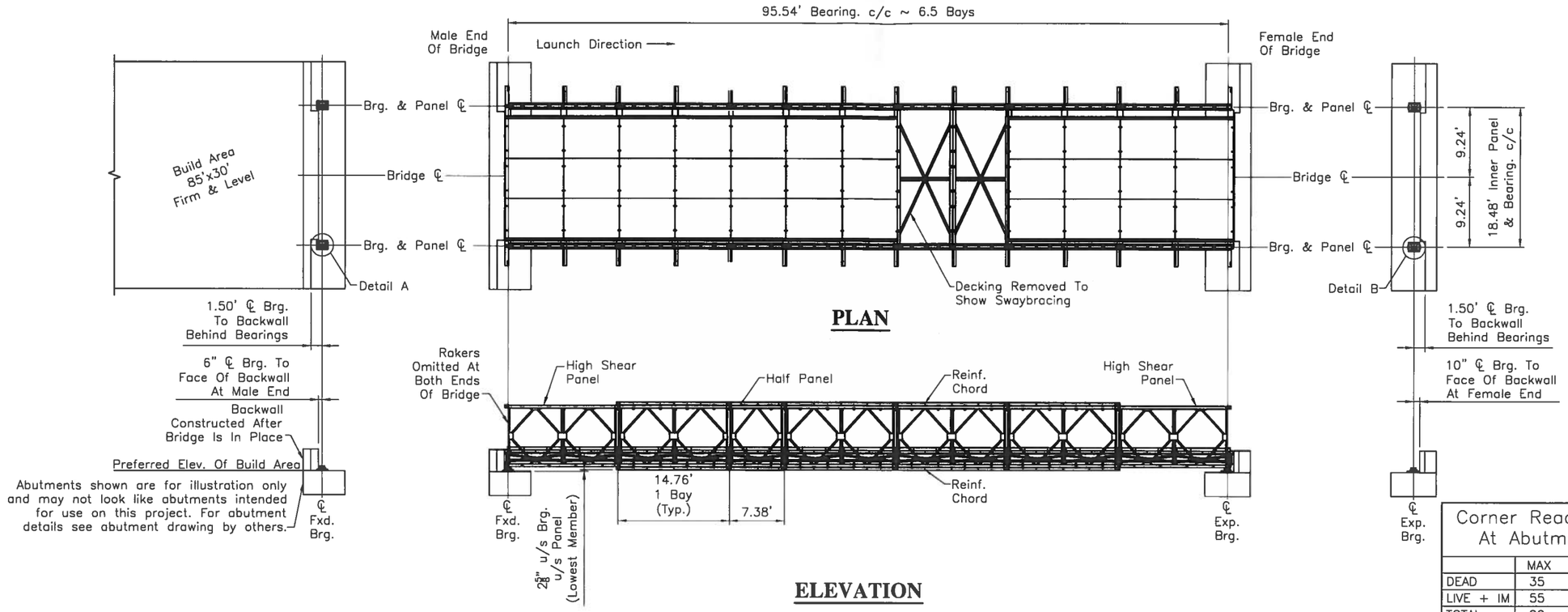

Corner Reactions At Abutment		
	MAX	MIN
DEAD	35	35
LIVE + IM	55	30
TOTAL	90	65

Reactions in Kips. 1 Kip = 1000 lbs.
Live Reactions (max. and Min.) are concurrent.
Difference is due to eccentricity of loading.
Exposed area of bridge (for calculating wind load) is 3.66 sq. ft. per ft.

NOTES:

1. Live Load is HS20.
2. Abutments and anchor bolts by contractor.
3. Due to the nature of modular bridging, dimensional tolerances can accumulate. Mabey Bridge recommends the following:
   a.)Construct backwalls after bridge is in place.
   b.)Cast 3" dia. voids at anchor bolt locations. Grout in anchor bolts after bridge is in position.
4. No drilling, welding, or alterations of any kind to Mabey-supplied equipment without written permission of Mabey, Inc. Engineering Dept. Equipment must be used in the manner intended, according to the supplied drawing(s) and calculations.
5. All expansion bearings shall be greased at installation.
6. All nuts shall be snug tight.

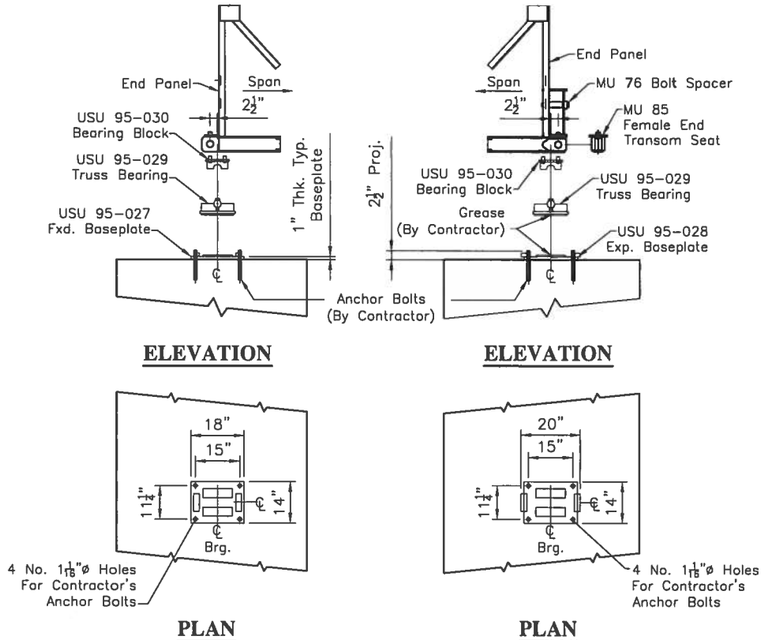

DETAIL A (FXD. BRG.)

DETAIL B (EXP. BRG.)

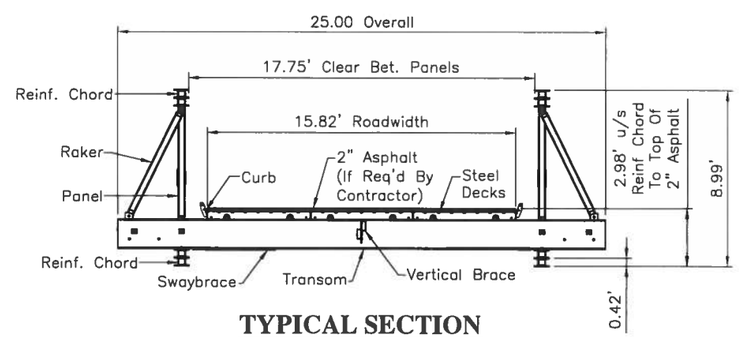

TYPICAL SECTION

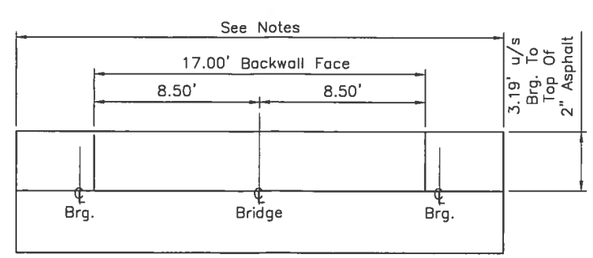

ABUTMENT ELEVATION

STATE OF VERMONT
ROBERT C. SMITH
8746
STRUCTURAL I
LICENSED
PROFESSIONAL ENGINEER
11/14/2014

General Arrangement and Geometric Abutment Layout for 6.5 Bay ~ Mabey Universal 15.80' Roadwidth HS20 Live Loading SSHRH+ Trusses

Client: Austin Construction			
Job Name: ---		Location: Corinth, Vt	
Drawn By: O.P.	Date: 11/07/14		Dwg. No.: P0072039SUB01
Checked By: C.C.	Date: 11/07/14		Order no.:
Revision		Sheet: 1 of 3	Scale: Do Not Scale

MABEY INC TEL 410-379-2800 FAX 410-379-2801

mabey
MABEY INC
6770 DORSEY RD. ELKRIDGE, MD. 21075
TEL : 410 379 2800
FAX : 410 379 2801

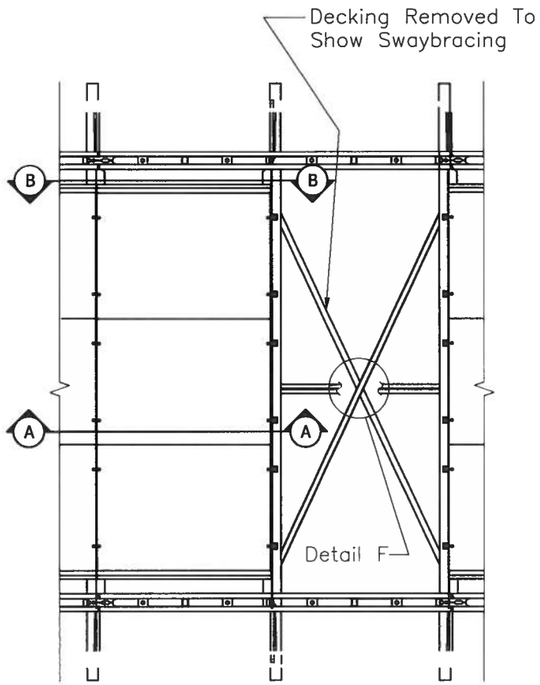

PLAN
(PLAN BRACING)

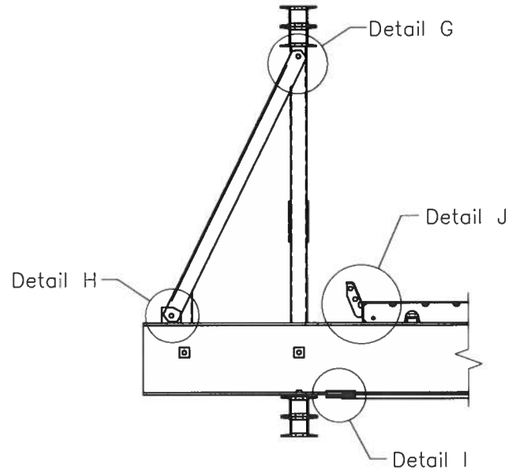

SECTION VIEW

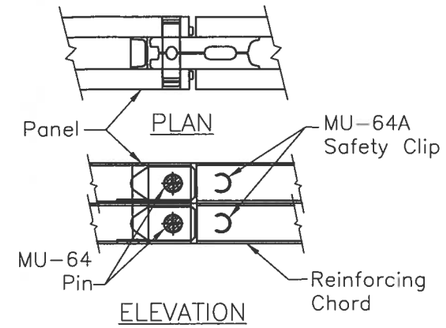

DETAIL E
PANEL TO PANEL
REINFORCING CHORD TO
REINFORCING CHORD CONNECTION

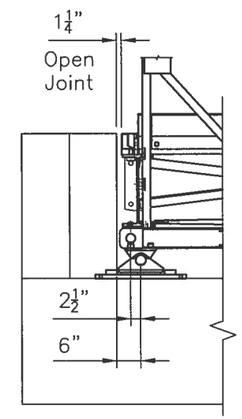

ELEVATION VIEW
(MALE END OF BRIDGE)

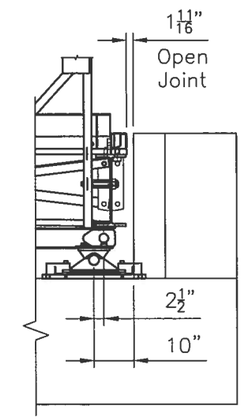

ELEVATION VIEW
(FEMALE END OF BRIDGE)

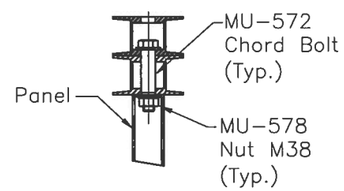

DETAIL C
PANEL TO REINF. CHORD
TOP CONNECTION

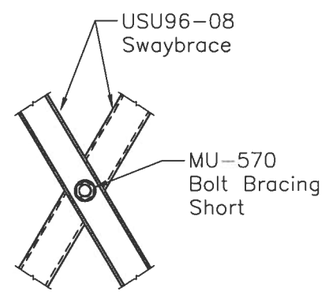

DETAIL F
SWAYBRACE T0
SWAYBRACE CONNECTION

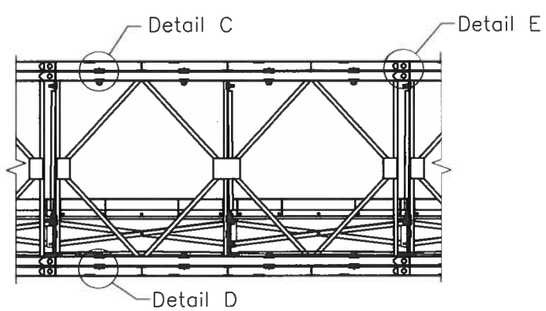

ELEVATION VIEW
(PANEL TO PANEL ASSEMBLY)

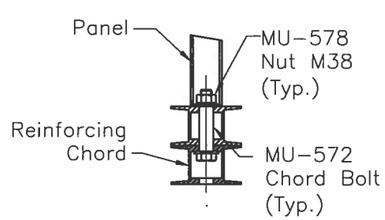

DETAIL D
PANEL TO REINF. CHORD
BOTTOM CONNECTION

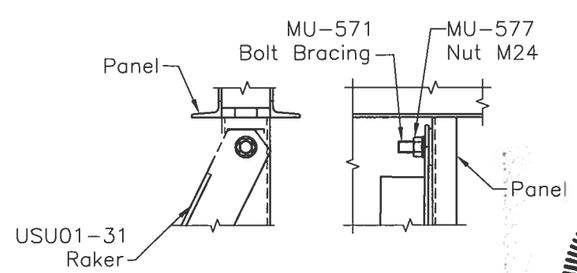

DETAIL G
PANEL TO RAKER
CONNECTION

STATE OF VERMONT
ROBERT C. SMITH
8746
STRUCTURAL I
LICENSED
PROFESSIONAL ENGINEER
11/14/2014

Connection Details for
6.5 Bay
Mabey Universal
15.80' Roadwidth
HS20 Live Loading
SSHRH+ Trusses

Client: Austin Construction			
Job Name: ---		Location: Corinth, Vt	
Drawn By: D.P.	Date: 11/07/14		Dwg. No.: P0072039SUB01
Checked By: C.C.	Date: 11/07/14		Order no.:
Revision		Sheet: 2 of 3	Scale: Do Not Scale

mabey
MABEY INC
6770 DORSEY RD. ELKRIDGE, MD. 21075
TEL : 410 379 2800
FAX : 410 379 2801
MABEY INC TEL 410-379-2800 FAX 410-379-2801

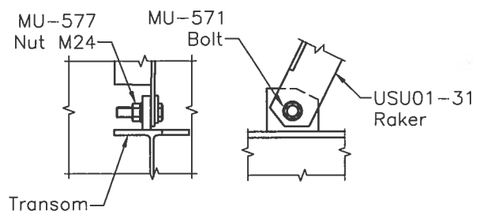

ELEVATION

DETAIL H
RAKER TO TRANSOM CONNECTION

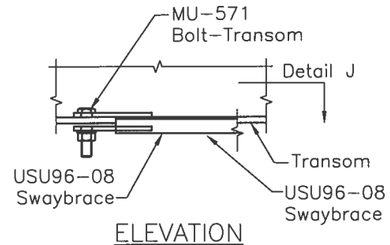

ELEVATION

DETAIL I
SWAYBRACE TO TRANSOM CONNECTION

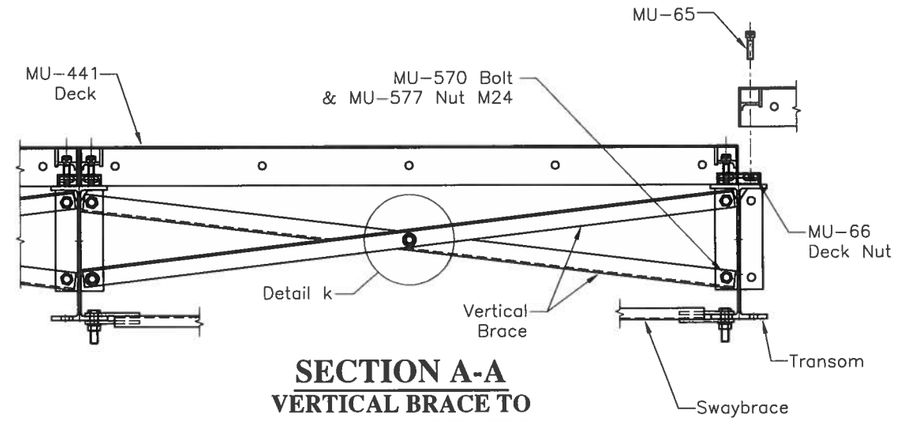

SECTION A-A
VERTICAL BRACE TO TRANSOM CONNECTION

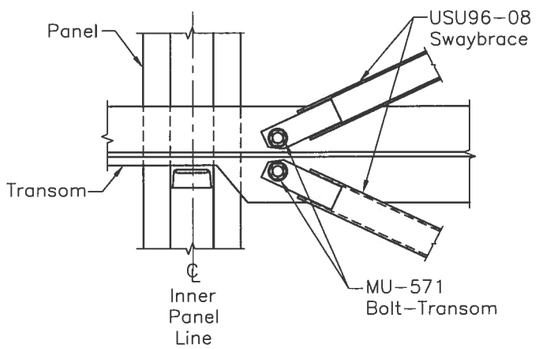

PLAN

DETAIL I
SWAYBRACE TO TRANSOM CONNECTION

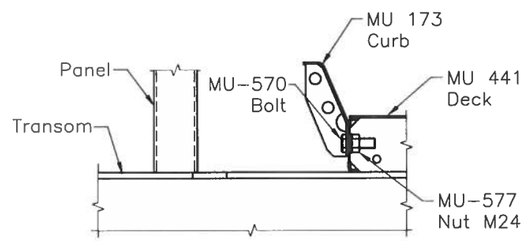

ELEVATION

DETAIL J
CURB TO DECK CONNECTION

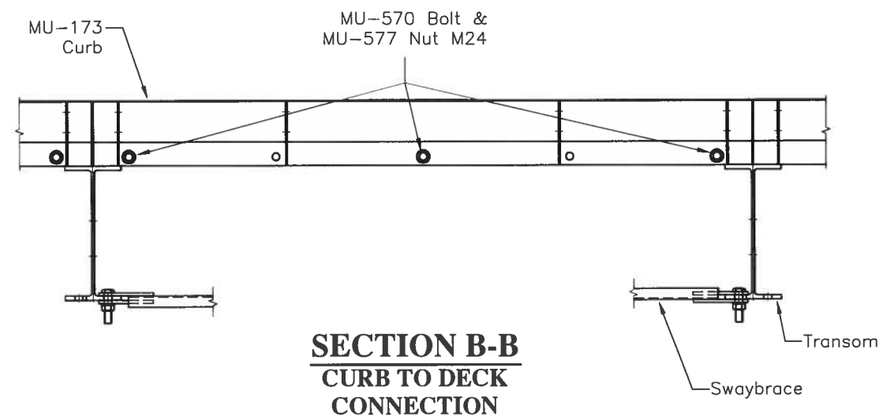

SECTION B-B
CURB TO DECK CONNECTION

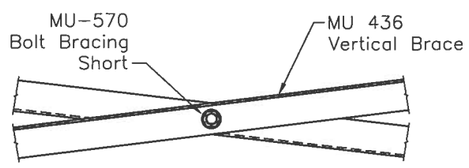

ELEVATION

DETAIL K
VERTICAL BRACE TO VERTICAL BRACE CONNECTION

STATE OF VERMONT
ROBERT C SMITH
8746
STRUCTURAL I
LICENSED
PROFESSIONAL ENGINEER
11/14/2014

Connection Details for
6.5 Bay
Mabey Universal
15.80' Roadwidth
HS20 Live Loading
SSHRH+ Trusses

Client: Austin Construction			
Job Name: ---		Location: Corinth, Vt	
Drawn By: O.P.	Date: 11/07/14		Dwg. No.: P0072039SUB01
Checked By: C.C.	Date: 11/07/14		Order no.:
Revision		Sheet: 3 of 3	Scale: Do Not Scale

mabey
rent the right way
MABEY INC
6770 DORSEY RD. ELKRIDGE, MD. 21075
TEL : 410 379 2800
FAX : 410 379 2801
MABEY INC TEL 410-379-2800 FAX 410-379-2801