MABEY Inc.

6770 DORSEY ROAD
BALTIMORE MD 21075
tel: (410) 379 2800
fax: (410) 379 2801

Austin Construction
96 ft span MU 15.8 ft rw SSHRH+

ref: P0072039
sheet:

Prepared by: DJS Date: 13-Nov-14 Checked by: CRC Date: 13-Nov-14

BRIDGING PROOF CALCULATIONS

Mabey ref: **P0072039**

CUSTOMER: **Austin Construction**

LOCATION: **TH #16 (Chicken Farm Road)**
Corinth, VT

STATE OF VERMONT
ROBERT C SMITH
8746
STRUCTURAL I
LICENSED
PROFESSIONAL ENGINEER
11/14/2014

Bridge Details

BRIDGE TYPE =	MU	
SPAN =	96	feet nominal
No. BAYS =	6.5	
WIDTH =	15.8	feet
CONSTRUCTION =	SSHRH	+
No. LANES =	1	
ASPHALT =	2.0	inches
AASHTO HS LOADING =	20	
OTHER LOADS =	50	plf (guardrail assumed)

Section through bridge

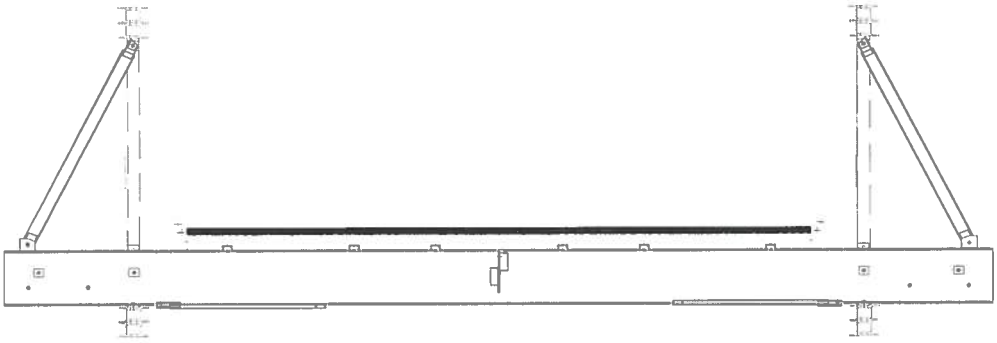

The calculations will show that the bridge will carry the given loads
Applied loads will be compared with allowable loads published by Mabey
Stresses in the principal members will be compared with AASHTO allowable

MABEY Inc.

6770 DORSEY ROAD
BALTIMORE MD 21075
tel: (410) 379 2800
fax: (410) 379 2801

Austin Construction

96 ft span MU 15.8 ft rw SSHRH+

ref: P0072039

sheet:

Prepared by: DJS Date: 13-Nov-14 Checked by: CRC Date: 13-Nov-14

Application of AASHTO "HS" loads

to give maximum Bending Moment in Trusses

Truck Loads

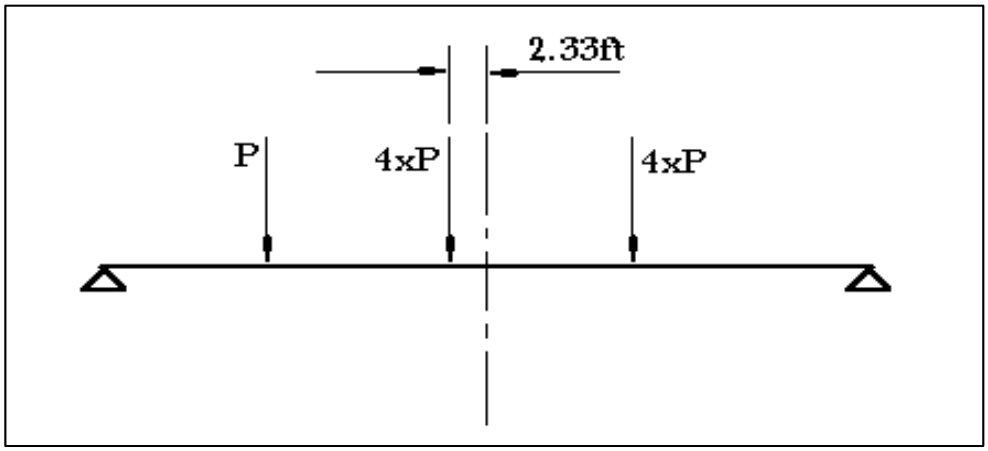

Lane Loads

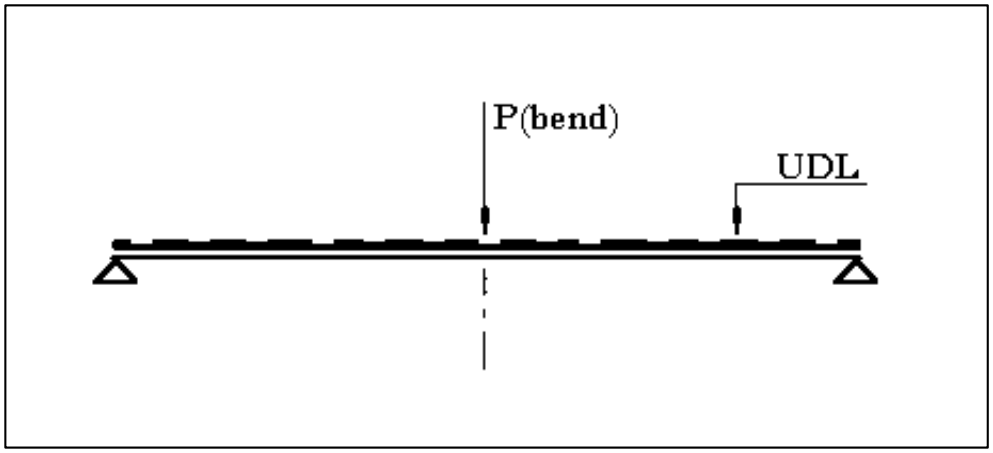

MABEY Inc.

6770 DORSEY ROAD
BALTIMORE MD 21075
tel: (410) 379 2800
fax: (410) 379 2801

Austin Construction

96 ft span MU 15.8 ft rw SSHRH+

ref: P0072039

sheet:

Prepared by: DJS Date: 13-Nov-14 Checked by: CRC Date: 13-Nov-14

Application of AASHTO "HS" loads

to give maximum Shear Force in Trusses

Truck Loads

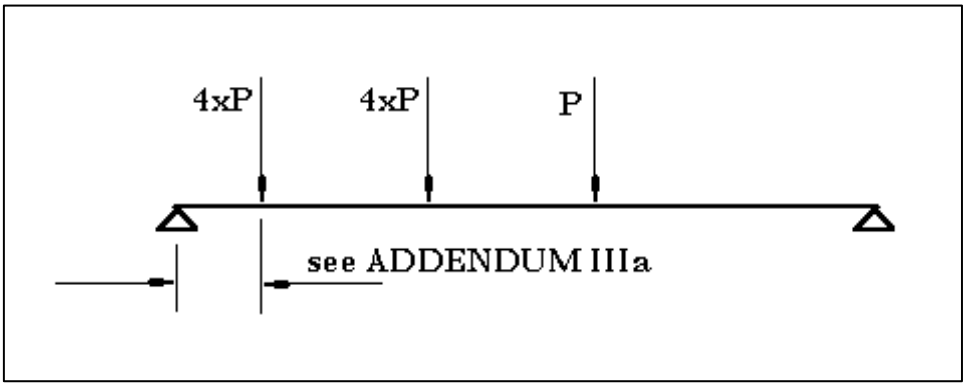

Lane Loads

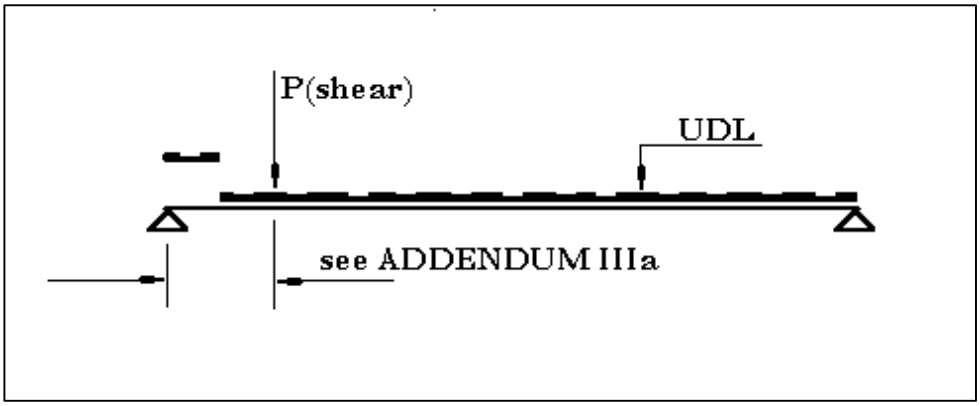

MABEY Inc.

6770 DORSEY ROAD
BALTIMORE MD 21075
tel: (410) 379 2800
fax: (410) 379 2801

Austin Construction

96 ft span MU 15.8 ft rw SSHRH+

ref: P0072039

sheet:

Prepared by: DJS Date: 13-Nov-14 Checked by: CRC Date: 13-Nov-14

LIVE LOADS

Span	96	feet			
Trusses	SSHRH	+	Transoms @	7.38	feet c/c
Roadway Width	15.8	feet			
No. Lanes	1				
Live Load factor	100%	AASHTO 3.12			
Live Load	**HS20**	Truck =	72	kips	
		Lane UDL =	0.64	klf	
		Lane KEL =	18	kips (Bending)	
			26	kips (Shear Force)	

HS20 Live Load

Bending	Truck	1452.3	k-ft	single lane only
	Lane	1169.3	k-ft	
Shear Force	Truck	59.5	kips	
(see ADDENDUM IIIa)	Lane	52.4	kips	

Impact	22.6%	AASHTO 3.8.2
Eccentricity	31.4%	(see ADDENDUM IIIb)

Live Bending	2340	k-ft
Live Shear Force	96	kips

MABEY Inc.

6770 DORSEY ROAD
BALTIMORE MD 21075
tel: (410) 379 2800
fax: (410) 379 2801

Austin Construction

96 ft span MU 15.8 ft rw SSHRH+

ref: P0072039

sheet:

Prepared by: DJS Date: 13-Nov-14 Checked by: CRC Date: 13-Nov-14

DEAD LOADS

Self weight	14.36	kips per bay (see ADDENDUM I)		
x	6.5	bays	93.3	kips
Surfacing	2.0	in thk		
tot weight	37.9	kips		
Guard Rail	50	plf		
tot weight	4.8	kips		
TOT WEIGHT			136	kips
Dead Bending			1633	k-ft
Dead Shear Force			68	kips

Total Loads

Live + Dead

TOTAL BENDING MOMENT	3973	k-ft
TOTAL SHEAR FORCE	164	kips

MABEY Inc.

6770 DORSEY ROAD
BALTIMORE MD 21075
tel: (410) 379 2800
fax: (410) 379 2801

Austin Construction

96 ft span MU 15.8 ft rw SSHRH+

ref: P0072039

sheet:

Prepared by: DJS Date: 13-Nov-14 Checked by: CRC Date: 13-Nov-14

CHECK PUBLISHED FIGURES

Mabey Inc. Published Truss Capacities
(See ADDENDUM II)

Truss Construction SSHRH +

Allowable BM	7155	k-ft	
Allowable SF	223	kips	High Shear Panels

The above figures include a 1.7 Factor of Safety against failure

Applied BM	3973	k-ft	→	56%	of allowable
Applied SF	164	kips	→	74%	of allowable

MABEY Inc.

6770 DORSEY ROAD
BALTIMORE MD 21075
tel: (410) 379 2800
fax: (410) 379 2801

Austin Construction

96 ft span MU 15.8 ft rw SSHRH+

ref: P0072039

sheet:

Prepared by: DJS Date: 13-Nov-14 Checked by: CRC Date: 13-Nov-14

CHECK AASHTO STRESSES

Check stresses in main truss members (Chords and Diagonals)
Compare with figures from AASHTO table 10.32.1A

Applied BM	3973	k-ft
Applied SF	164	kips
Truss Construction	SSHRH	+

Bending Moment

No. Panel Lines	1	per truss
No. Compression Chords	1	per truss
Lever Arm to chords	98	inches
Area of Panel Chord	14.6	square inches

Compression Stress in each Chord **16.66** ksi
cf allowable stress given in ADDENDUM IVa **29.02** ksi

Shear Force

No. Panel Lines	1	per truss
Effective No. Diagonals	2	per truss
Included Angle	45	degrees
Area of Diagonal	2.6	square inches (High Shear Panels)

Compression Stress in Diagonal **22.30** ksi
cf allowable stress given in ADDENDUM IVb **24.79** ksi

MABEY Inc.

6770 DORSEY ROAD
BALTIMORE MD 21075
tel: (410) 379 2800
fax: (410) 379 2801

Austin Construction

96 ft span MU 15.8 ft rw SSHRH+

ref: P0072039

sheet:

Prepared by: DJS Date: 13-Nov-14 Checked by: CRC Date: 13-Nov-14

CHECK SHEAR FORCE IN BAY 2 - THE FIRST BAY OF STANDARD SHEAR PANELS

2nd bay transom @ 22.14 feet c/c
Trusses SSHRH +

HS20 Live Load

Shear Force bay 2	Truck	48.4	kips	} single lane only
(see ADDENDUM IIIa)	Lane	40.1	kips	
	Impact	22.6%	AASHTO 3.8.2	
	Eccentricity	31.4%	(see ADDENDUM IIIb)	
	No. Lanes	1		
	Live Load factor	100%		

Live Shear Force Bay 2 78 kips

Dead Loads

Weight per bay 20.9 kips 6.5 bays

Dead Shear Force Bay 2 47.1 kips

Total Shear Loads in Bay 2

Live + Dead
TOTAL SHEAR FORCE BAY 2 125 kips

Allowable SF 156 kips → 80% of allowable
(See ADDENDUM II)

Shear Force

No. Panel Lines	1	per truss
Effective No. Diagonals	2	per truss
Included Angle	45	degrees
Area of Diagonal	2.06	square inches (Std Panels)

Compression Stress in Diagonal **21.47** ksi
cf allowable stress given in ADDENDUM IVc **24.81** ksi

MABEY Inc.

6770 DORSEY ROAD
BALTIMORE MD 21075
tel: (410) 379 2800
fax: (410) 379 2801

Austin Construction

96 ft span MU 15.8 ft rw SSHRH+

ref: P0072039

sheet:

Prepared by: DJS Date: 13-Nov-14 Checked by: CRC Date: 13-Nov-14

CORNER REACTIONS AT ABUTMENTS

Dead Loads

Total Weight of Bridge & Surfacing 136.1 kips (see pg 5)

Reaction at each Corner 34.0 kips say 35 kips

Live Loads

Reaction	Truck	65.0	kips	single lane only
	Lane	56.7	kips	
	Impact	22.6%	AASHTO 3.8.2	
	Eccentricity	31.4%	(see ADDENDUM IIIb)	
	No. Lanes	1		
	Live Load factor	100%		

MAX Reaction at Corner 52.4 kips say 55 kips

MIN Reaction at Corner 27.3 kips say 30 kips

Corner Reactions

	MAX	MIN
DEAD	35	35
LIVE + IM	55	30
TOTAL	90	65

Note:
All reactions are in kips (1 kip = 1000lbs)
Live Reactions (max. and min.) are concurrent. Difference is due to eccentricity of loading.

1606 Deck Units
Mabey Universal Bridging 2.25m (7.4ft)

ref #:	P0072039
sheet #:	
Prepared By:	DJS
Date:	11/13/2014
Checked By:	CRC
Date:	11/13/2014

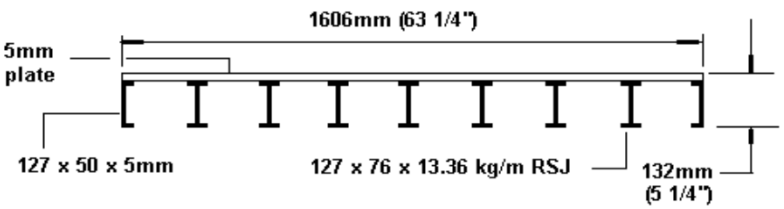

Ybar =	3.45	in
I_{xx} =	145.60	in^4
S_x (top) =	80.76	in^3
S_x (bot) =	42.24	in^3

Top Section

Fy =	50	ksi
FoS =	1.82	(.55 Fy)

BM Capacity = 2219 k-in

Bottom Section

Fy =	50	ksi
FoS =	1.82	(.55 Fy)

BM Capacity = 1160 k-in

Bottom Section governs

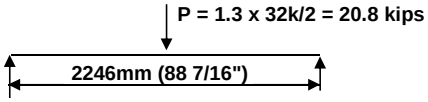

P allow = 52.5 kips > 20.8 kips OK

MABEY Inc.

6770 DORSEY ROAD
BALTIMORE MD 21075
tel: (410) 379 2800
fax: (410) 379 2801

Austin Construction

96 ft span MU 15.8 ft rw SSHRH+

ref: **P0072039**

sheet:

Prepared by: **DJS** Date: **11/13/2014** Checked by: CRC Date: 11/13/2014

Transom Loads

Section:

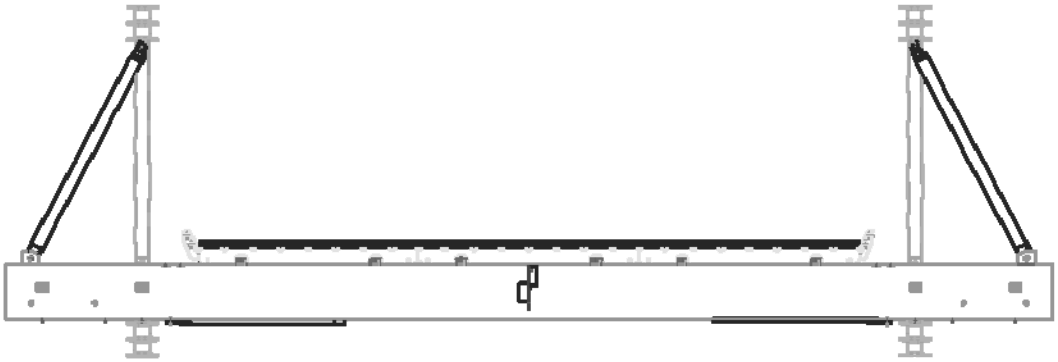

Determine Dead Loading: Transom spacing = 7.38 ft

Asphalt: 2ins x 15.8ft x 7.38ft x 150pcf = 2.916 kips

Decking: 1050 MU deck = 0.9766 kips

0.9766 kips x 3 units wide = 2.9298 kips

Kerbs: Kerb unit = 0.060 kips

0.06 kips x 2 units = 0.120 kips

Total = 5.966 kips

Transom is a W18x50 USU 96-07 Length = 25ft

Transom Self Wt = 1.250 kips

TRANSOM DESIGN (BENDING ONLY)
POINT LOADS (AXLES) ON SIMPLY SUPPORTED BEAM
TRANSOM & DECKING MUST BE SYMMETRICAL

ref #:	**P0072039**
sheet #:	
Prepared By:	**DJS**
Date:	**11/13/2014**
Checked By:	CRC
Date:	11/13/2014

1 LANE			
L1 =	18.48	feet	truss c/c
L2 =	15.80	feet	deck width
L3 =	8.50	feet	wheel c/c
L4 =	7.11	feet	
L5 =	5.78	feet	
W1 =	1.25	kips	weight of Transom
W2 =	5.97	kips	weight of decking + surfacing
P =	41.60	kips	axle load (incl IM)
BMx(W1) =	2.73	kips.ft	
BMx(W2) =	14.93	kips.ft	
BMx(P) =	113.95	kips.ft	
BM(tot) =	131.61	kips.ft	
Gr. steel =	50	ksi	
% of yield =	55	%	
f(b) =	27.50	ksi	

Section Modulus required
Sx = 57.4 cu.ins

Section Modulus Provided = 88.9 cu.ins
Therefore OK

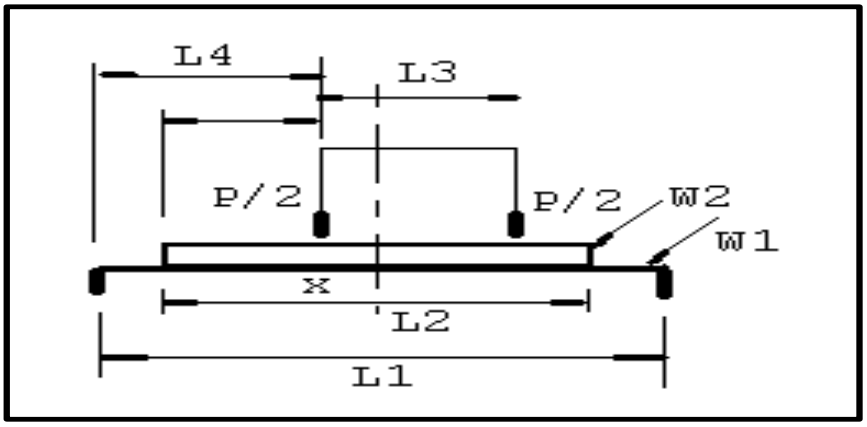

15.8ft RW

CONTRACT: P0072039
TRUSS: SSHRH
FULL BAYS: 6
HS BAYS: 2
HALF BAYS: 1
BRG FR Y/N: n

Addendum I

BRIDGE wt.	93305	lbs
L & E wt.	12	lbs
No. TRUCKS	2.2	
Wt. Per Bay	14355	lbs
DATE :	13-Nov-14	

MARK No.	DESCRIPTION	BRIDGE Qty	L & E Qty	UNIT wt
MU570	BOLT-BRACING-SHORT	156	**0**	0.6
MU571	BOLT-TRANSOM	116	**0**	0.9
MU572	BOLT-CHORD	72	**0**	7.6
MU577	NUT-M24	272	**0**	0.3
MU578	NUT-M36	72	**0**	1.3
MU65	SCREW-DECK-CLAMP	156	**0**	0.5
MU66	NUT-DECK-CLAMP-M20	156	**0**	0.4
MU64	PIN-PANEL	42	**0**	9.7
MU64A	CLIP-PANEL-PIN	84	**0**	0.03
MU76	BOLT-SPACER-FE-ASSY	2	**0**	5.7
MU78	BEARING-SLIDING		**0**	146
MU85	SEAT-TRANSOM-FE	2	**0**	12.8
MU121	PANEL-SUPER	8	**0**	1508.2
MU123	PANEL-SUPER-HALF	2	**0**	826.8
MU125	PANEL-SUPER-H.S.	4	**0**	1745.5
USU01-31	RAKER - 457	24	**0**	61
MU173	KERB	26	**0**	59.7
MU256	REINF-CHORD-HEAVY	16	**0**	487
MU258	REINF-CHD-1/2-HVY	4	**0**	274.9
USU96-07	TRANSOM - 16ft RW	14	**0**	1250
USU96-08	SWAYBRACE - 16ft RW	26	**0**	100
MU436	BRACE-VERTICAL	26	**0**	28.2
MU441	DECK-1606	33	**0**	959
MU443	DECK-1606-EOB	6	**0**	1004
DECKHOOK	DECK HOOKS	0	**4**	3
USU95-27	BASEPLATE - FIXED - USA	2	**0**	89
USU95-28	BASEPLATE - SLIDE - USA	2	**0**	89
USU95-29	BEARING - TRUSS - USA	4	**0**	63
USU95-30	BEARING BLOCK - USA	4	**0**	19
USU95-31	BASEPLATE-FIXED-DOUBLE-USA	0	**0**	160
USU95-32	BASEPLATE-SLIDE-DOUBLE-USA	0	**0**	160

Checkers' initials	CRC	
Date Checked	11/13/2014	

Notes

1 Preliminary parts list, actual parts may vary.
2 Prepared by DJS
3

MABEY UNIVERSAL BRIDGING
MAXIMUM ALLOWABLE LOADS IN TRUSSES

Truss Construction	Bending Moment Kip-ft	Shear Force (Standard Panels) Kips	Shear Force (H.S. Panels) Kips
SSH	3,615	156	223
SSHR	6,491	156	223
SSHRH	7,155	156	223
DSH	7,873	282	403
DSHR1	11,380	211	302
DSHR1H	12,233	211	302
DSHR2	14,899	282	403
DSHR2H	16,594	282	403
TSH	11,322	422	604
TSHR2	18,043	353	504
TSHR2H	19,671	353	504
TSHR3	21,420	422	604
TSHR3H	23,849	422	604
DDH	14,458	524	564
DDHR1	20,233	393	422
DDHR1H	21,570	379	408
DDHR2	26,029	524	564
DDHR2H	28,712	524	564
TDH	21,680	786	846
TDHR2	33,258	654	706
TDHR2H	35,911	654	706
TDHR3	39,061	786	846
TDHR3H	43,045	786	846

NOTES

1. The Moment and Shear properties tabulated are consistent with a minimum factor of safety of 1.7.
2. The Shear properties tabulated take account of any maldistribution of load between the panel lines due to differential stiffnesses within the trusses (DSHR1, TSHR2H, etc.).
3. These properties are calculated for worst case situations. In certain circumstances increases in these properties may be possible but only on the express written approval of Mabey engineers.
4. All double story constructions must have end posts at abutments.

For maximum shear force, the position of the load for maximum effect is not at the end of the span (i.e. directly over the end transom) but rather at the second transom position, as explained below:

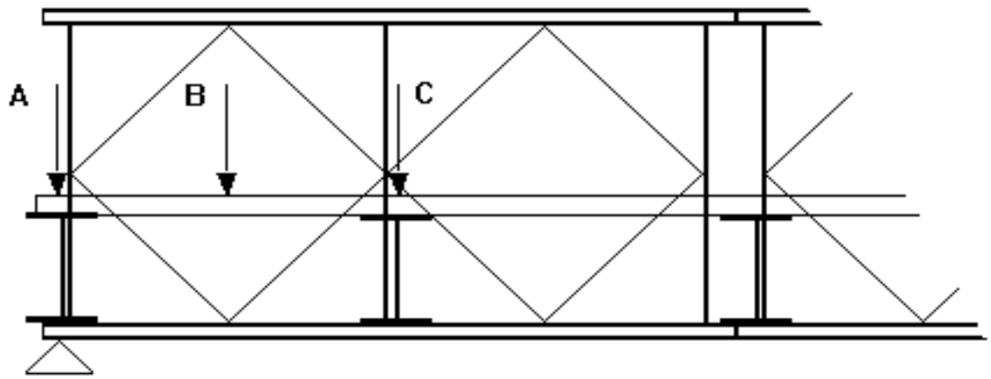

With the load at position A (directly over the end transom - position for maximum end reaction), all of the load is transferred directly to the bearing through the transom.

With the load at position B (between the end and the second transom), part of the load is transferred directly to the bearing through the end transom and part to the truss through the second transom.

With the load at position C (directly over the second transom - 7.4ft from the end in standard configuration), all of the load is transferred through the truss, and this is therefore the position for maximum shear force.

Mabey Universal Bridging
Eccentricity Factors

The loads in each truss are increased
to allow for the eccentricity of the live load in the roadway

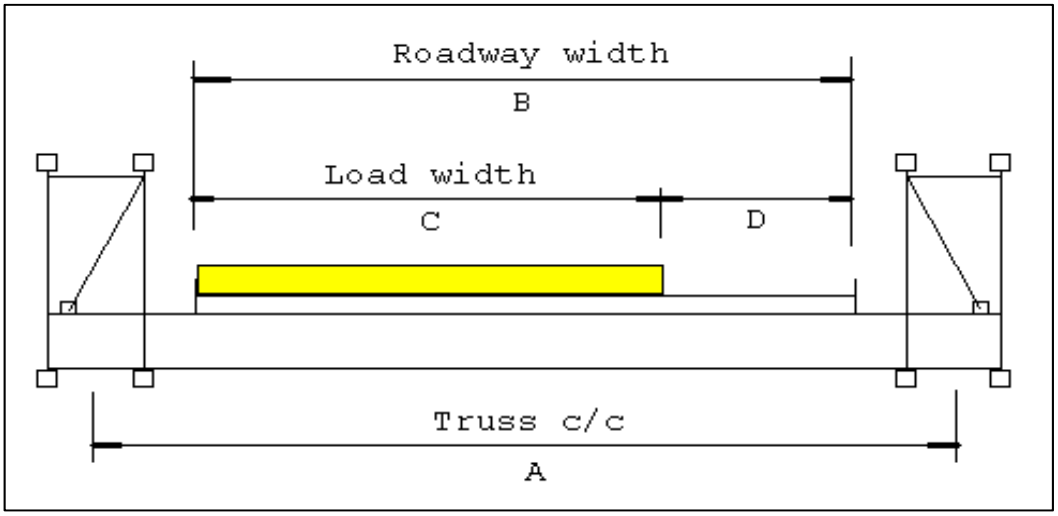

$$\text{eccentricity factor (e)} = \frac{(A + B - C)}{A} \longrightarrow \frac{(A + D)}{A}$$

A =	**18.48**	**ft**
B =	**15.8**	**ft**
C =	**10.0**	**ft**
D =	**5.8**	**ft**

$$\mathbf{e = \frac{(18.48 + 5.8)}{18.48} = 1.314}$$

MABEY UNIVERSAL BRIDGING
SINGLE TRUSS - PLAIN PANEL LINE
MAXIMUM ALLOWABLE AXIAL STRESS IN CHORDS
(based upon AASHTO Table 10.32.1A)

Individual Properties	Channel Section	AREA in^2	Ix in^4	Rx in	Iy in^4	Ry in
PANEL CHORD	MC5x12.4	3.65	13.07	1.89	2.06	0.75

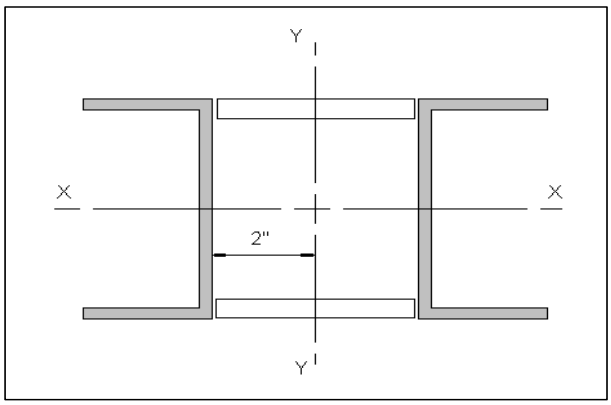

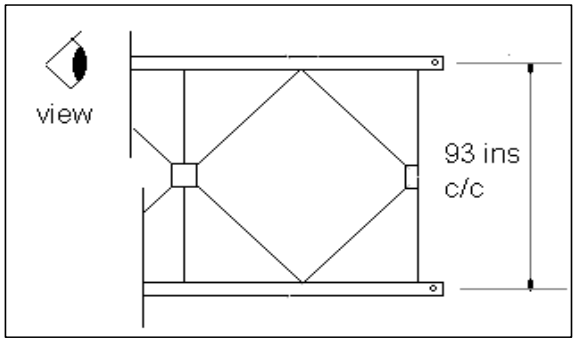

Composite Properties	AREA in^2	Ixx in^4	Rxx in	Iyy in^4	Ryy in
PANEL CHORD	7.30	26.14	1.89	60.00	2.87

AASHTO Table 10.32.1A $Fa = (Fy / F.S.) \times \{1 - [(k \times L / R)^2] \times Fy / (4 \times (pi)^2 \times E)\}$

	X - X plane	Y - Y plane	
Fy =	65.00	65.00	ksi
F.S. =	2.12	2.12	
L =	44	88	ins (maximum unsupported length)
k =	1	1	(pinned ends)
E =	29000	29000	ksi
Fa =	**29.72**	**29.02**	**ksi**

MABEY UNIVERSAL BRIDGING
SUPER HIGH SHEAR END PANEL
MAXIMUM ALLOWABLE AXIAL STRESS IN DIAGONAL
(based upon AASHTO Table 10.32.1A)

Individual Properties	Channel Section	AREA in^2	Ix in^4	Rx in	Iy in^4	Ry in
DIAGONAL	MC4x8.8	2.60	5.57	1.46	0.75	0.54

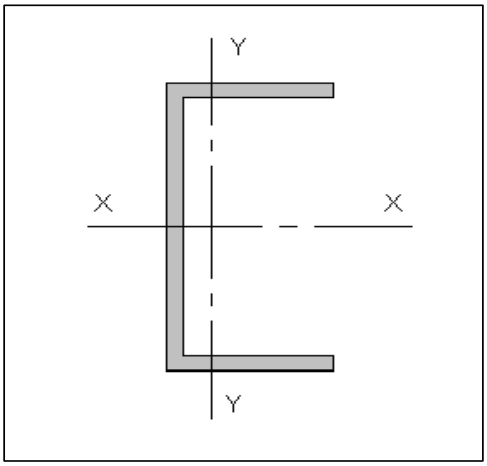

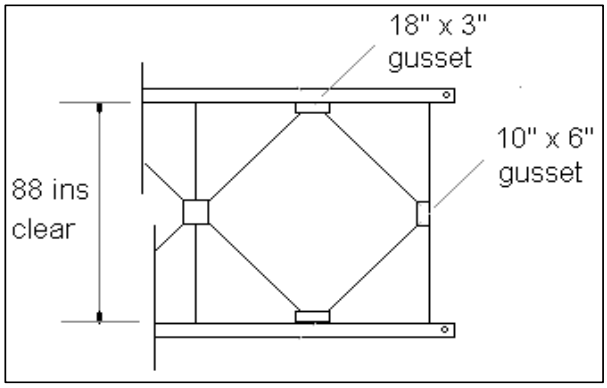

Final Properties	AREA in^2	Ixx in^4	Rxx in	Iyy in^4	Ryy in
DIAGONAL	2.60	5.57	1.46	0.75	0.54

AASHTO Table 10.32.1A $Fa = (Fy / F.S.)(1 - (kL/R)^2 Fy / (4(\pi)^2 E))$

	X - X plane	Y - Y plane	
Fy =	65.00	65.00	ksi
F.S. =	2.12	2.12	
L =	48	48	in (maximum unsupported length between gussets)
k =	0.65	0.65	(fully fixed ends)
E =	29000	29000	ksi

Fa =	**29.87**	**24.79**	**ksi**

MABEY UNIVERSAL BRIDGING
SUPER/STANDARD PANEL
MAXIMUM ALLOWABLE AXIAL STRESS IN DIAGONAL
(based upon AASHTO Table 10.32.1A)

Individual Properties	Channel Section	AREA in^2	Ix in^4	Rx in	Iy in^4	Ry in
DIAGONAL	MC4x7	2.06	5.00	1.56	0.70	0.58

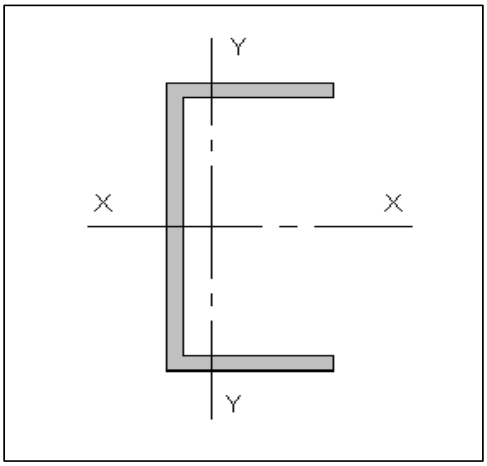

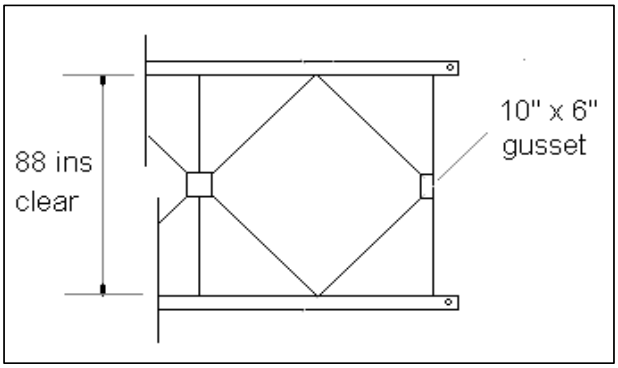

Final Properties	AREA in^2	Ixx in^4	Rxx in	Iyy in^4	Ryy in
DIAGONAL	2.06	5.00	1.56	0.70	0.58

AASHTO Table 10.32.1A $Fa = (Fy / F.S.)(1 - (kL/R)^2 Fy / (4(\pi)^2 E))$

	X - X plane	Y - Y plane	
Fy =	65.00	65.00	ksi
F.S. =	2.12	2.12	
L =	52	52	in (maximum unsupported length between gussets)
k =	0.65	0.65	(fully fixed ends)
E =	29000	29000	ksi

Fa =	**29.84**	**24.81**	**ksi**