GENERAL NOTES:

1. MATERIALS SHALL CONFORM TO STATE OF VERMONT, AGENCY OF TRANSPORTATION STANDARD SPECIFICATIONS FOR CONSTRUCTION, DATED 2011 AND THE LATEST REVISIONS, INCLUDING SUPPLEMENTARY SPECIFICATIONS, CONTRACT PLANS, AND THE SPECIAL PROVISIONS. GENERAL SHOP PRACTICES, STRUCTURAL FABRICATION, WELDING AND ASSEMBLY SHALL BE GOVERNED BY ANSI/AASHTO/AWS D1.5 BRIDGE WELDING CODE.

2. THESE SHOP DRAWINGS WERE PREPARED IN ACCORDANCE WITH THE CONTRACT PLANS AND SPECIFICATIONS. THE D.S. BROWN COMPANY DOES NOT ACCEPT LIABILITY FOR THE DESIGN OF THE PRODUCTS DETAILED IN THESE SHOP DRAWINGS.

3. THE D.S. BROWN COMPANY TO SUPPLY ONLY THE PARTS SHOWN ON THESE SHOP DRAWINGS.

4. THE BEARINGS SHALL BE SUBJECT TO RANDOM IN-HOUSE ELASTOMER TESTING AND IN-HOUSE PROOF LOAD TESTING IN ACCORDANCE WITH AASHTO LRFD BRIDGE DESIGN SPECIFICATIONS, SECTION 14 (METHOD 'B') AND AASHTO LRFD CONSTRUCTION SPECIFICATIONS SECTION 18.

5. BEARINGS SHALL BE TESTED IN ACCORDANCE WITH THE SPECIAL PROVISIONS.

6. ALL STEEL SHALL BE PRODUCED IN THE UNITED STATES OF AMERICA.

7. ALL CORNERS AND EDGES OF STEEL PLATES SHALL BE GROUND TO A 1/16" RADIUS FOR GALVANIZING.

8. ALL EXTERNAL STEEL SHALL BE GALVANIZED IN ACCORDANCE WITH AASHTO M111 AND M232 (ASTM 123 & 153) SPECIFICATIONS. IN ACCORDANCE WITH SECTION 726.08 OF THE STANDARD SPECIFICATIONS, REPAIR DAMAGED HOT DIPPED GALVANIZING PER ASTM A780, ANNEX A2. THE PAINT USED IN THE REPAIR SHALL BE ORGANIC-ZINC, CONTAINING 92% MINIMUM ZINC BY WEIGHT IN THE DRY FILM. THE PAINT SHALL BE APPLIED PER MANUFACTURER'S RECOMMENDATIONS TO A THICKNESS EQUIVALENT TO THE SURROUNDING GALVANIZING.

9. GALVANIZATION LIFTING DEVICES MAY BE WELDED TO PARTS IF NECESSARY. WHEN THEIR USE IS COMPLETE, REMOVE AND GRIND FLUSH ALL CONNECTION LOCATIONS. REPAIR AREA PER ASTM A780, ANNEX A2.

10. BEARING MANUFACTURING FACILITY AND REPRESENTATIVE FOR COORDINATING PRODUCTION:
THE D.S. BROWN COMPANY
300 EAST CHERRY STREET
NORTH BALTIMORE, OHIO 45872
CSR - MARCIE MCKINNON - (419) 257-3561

TOLERANCE TABLE	
DESCRIPTION	TOLERANCE (INCHES U.N.O.)
ELASTOMERIC BEARING DESIGN THICKNESS ≤ 1.250"	−0, +0.1181
ELASTOMERIC BEARING DESIGN THICKNESS > 1.250"	−0, +0.2362
ELASTOMERIC BEARING PLAN DIMENSIONS ≤ 36"	−0, +0.2362
ELASTOMERIC BEARING PLAN DIMENSIONS > 36"	−0, +0.4724
THICKNESS OF INDIVIDUAL LAYERS OF ELASTOMER (LAMINATED BEARINGS ONLY) AT ANY POINT WITHIN THE BEARING	±0.1181
VARIATION FROM A PLANE PARALLEL TO THE THEORETICAL SURFACE (AS DETERMINED BY MEASUREMENTS AT THE EDGE OF THE BEARINGS) (PARALLELISM):	
TOP & BOTTOM	±0.005 RAD
SIDES	±0.2362
POSITION OF EXPOSED CONNECTION MEMBERS	±0.1181
ELASTOMERIC COVER: TOP & BOTTOM	−0, +0.1181
ELASTOMERIC COVER: SIDES	−0, +0.1181
ELASTOMERIC BEARING HOLE OR SLOT SIZE	±0.1181
ELASTOMERIC BEARING HOLE OR SLOT LOCATION	±0.1181
STEEL PLATE THICKNESS	±0.063
STEEL PLATE PLAN DIMENSIONS ≤ 30"	±0.250
STEEL PLATE PLAN DIMENSIONS > 30"	±0.250
STEEL PLATE FLATNESS IN CONTACT WITH BEARING	0.001 X NOM. DIMENSION *
STEEL PLATE FLATNESS: STEEL GIRDER SIDE	0.002 X NOM. DIMENSION *
STEEL PLATE SURFACE FINISH IN CONTACT WITH BEARING	125 μ" RMS *
BEVEL SLOPE	±0.002 RAD
ANCHOR HOLE OR SLOT SIZE	±1/8
ANCHOR HOLE OR SLOT LOCATION	±1/8
* PRIOR TO GALVANIZATION	

MARKING NOTES:

1. EACH BEARING SHALL BE PERMANENTLY MARKED. THE MARKING SHALL CONSIST OF THE ORDER NUMBER, LOT NUMBER, PAD IDENTIFICATION NUMBER, UP STATION AND ELASTOMER TYPE AND GRADE. WHERE POSSIBLE, THE MARKING SHALL BE ON A FACE WHICH IS VISIBLE AFTER ERECTION OF THE STRUCTURE.

2. MARK THE THICKER EDGE OF THE BEVELED PLATE FOR IDENTIFICATION IN THE FIELD.

CONTRACTOR NOTES:

1. WELDING PROCEDURES SHALL BE ESTABLISHED BY THE CONTRACTOR TO RESTRICT THE TEMPERATURE TO A MAXIMUM OF 200°F (93°C) FOR SURFACES IN CONTACT WITH THE ELASTOMER. TEMPERATURES SHALL BE DETERMINED BY TEMPERATURE INDICATING WAX PENCILS OR OTHER SUITABLE MEANS.

Vermont Agency of Transportation
Elastomeric Bearing Assembly Shop Drawings - 2003-2015
RECEIVED
ON: January 7, 2015
and Checked for
CONFORMANCE
BY: D Bonneau DATE: 01/26/2015

T.Y. LIN INTERNATIONAL

THE STAMPED DOCUMENTS ARE HEREBY:

_____ APPROVED
__X__ APPROVED AS NOTED
_____ REVISE AND RESUBMIT

SEE TRANSMITTAL FOR ADDITIONAL INFORMATION AS APPLICABLE.

THIS REVIEW IS FOR GENERAL CONFORMANCE WITH DESIGN CONCEPT ONLY. ANY DEVIATION FROM THE PLANS OR SPECIFICATIONS NOT CLEARLY NOTED BY THE CONTRACTOR HAS NOT BEEN REVIEWED. REVIEW BY THE ENGINEER SHALL NOT RELIEVE THE CONTRACTOR OF THE CONTRACTUAL RESPONSIBILITY FOR ANY ERRORS OR DEVIATION FROM THE CONTRACT REQUIREMENTS.

RICK HEBERT — REVIEWER
1/21/2015 — DATE

REV.	DESCRIPTION	DATE	DET.	CKD.

D.S. BROWN
A GIBRALTAR INDUSTRIES COMPANY
THE D.S. BROWN COMPANY
300 E. CHERRY STREET
NORTH BALTIMORE, OHIO 45872
419.257.3561
FAX: 419.257.0332
WWW.DSBROWN.COM

LOCATION — BENMONT AVE. (TH-7) (URBAN MINOR ARTERIAL)
BRIDGE — 57
PROJECT NAME — BENNINGTON
PROJECT NO. — BRF 1000 (16)
P.O. NO. — 2014-086-004
DESIGNER — TY-LIN INTERNATIONAL
CUSTOMER — ALPINE CONSTRUCTION, LLC

ITEM	QUANTITY
–	–
–	–
–	–
–	–
–	–
–	–
–	–
–	–
–	–

DESCRIPTION: GENERAL NOTES
BENNINGTON COUNTY, VT

SCALE:	DRAWN BY:	CHECKED BY:	DATE:	
N.T.S.	SP	EAK	1/15	–
PROJECT NUMBER	PRODUCT CODE	RELEASE	SHEET	
45651	1104	–	GN1	

MK	QTY	DESCRIPTION	MATERIAL	LENGTH	REMARKS	WT*	REV
1A	2	VERSIFLEX ELASTOMERIC BEARING	45651.1104.1			236	
1a1	2	3.125" X 18.000"	NATURAL RUBBER	14.000"	60+/-5 DURO GR.4	32	
1a2	10	11 GA. X 17.500"	A1011 GR 50	13.500"	PLAIN	8	
1sp1	2	1.809" X 20.000"	M270 GR 50W (A709)	16.000"	M111-HDG (A123)	164	
1B	2	VERSIFLEX ELASTOMERIC BEARING				238	
1a1	2	3.125" X 18.000"	NATURAL RUBBER	14.000"	60+/-5 DURO GR.4	32	
1a2	10	11 GA. X 17.500"	A1011 GR 50	13.500"	PLAIN	8	
1sp2	2	1.834" X 20.000"	M270 GR 50W (A709)	16.000"	M111-HDG (A123)	166	
1C	2	SAMPLE BEARING	45651.1103.1			72	
1a1	2	3.125" X 18.000"	NATURAL RUBBER	14.000"	60+/-5 DURO GR.4	32	
1a2	10	11 GA. X 17.500"	A1011 GR 50	13.500"	PLAIN	8	
		*Approx. Gross Wt. Lbs Per Single Unit			1/5/15 2:37:03 PM		

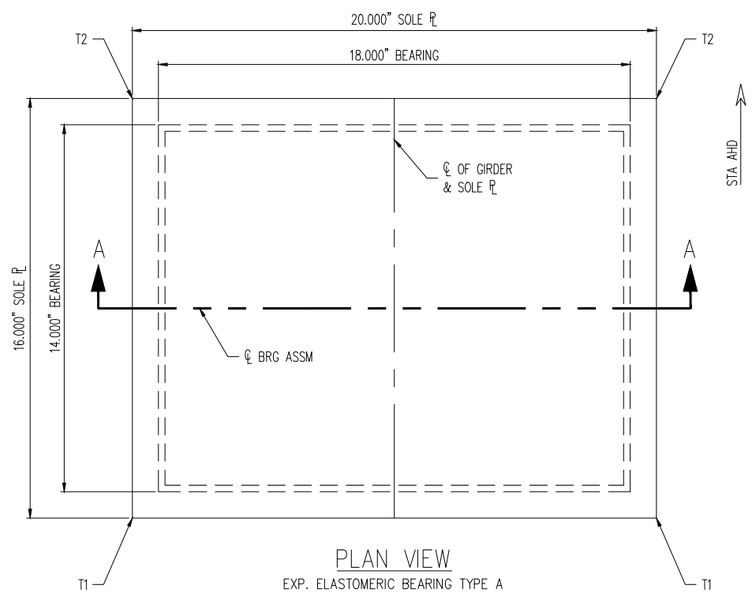

PLAN VIEW

EXP. ELASTOMERIC BEARING TYPE A
(2) REQ'D @ PIER 1; G1, G5
(2) REQ'D @ PIER 2; G1, G5
(2) SAMPLE BEARINGS W/O EXT. STEEL REQ'D

BEARING SCHEDULE				
LOCATION	SOLE PL PC MK	QTY	T1	T2
PIER 1; G1, G5	1sp1	2	1.691"	1.809"
PIER 2; G1, G5	1sp2	2	1.834"	1.666"

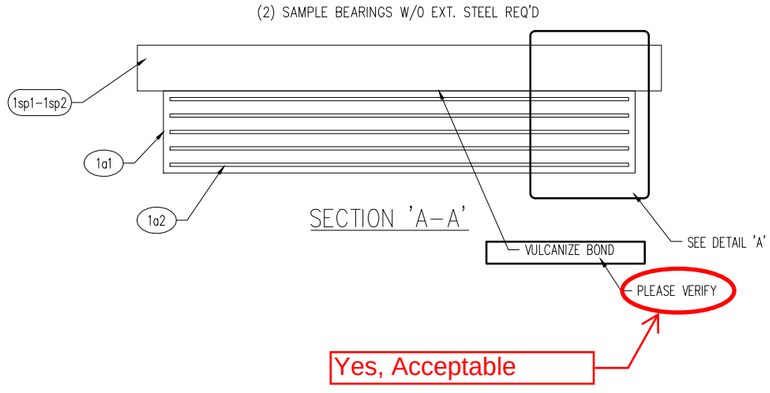

SECTION 'A-A'

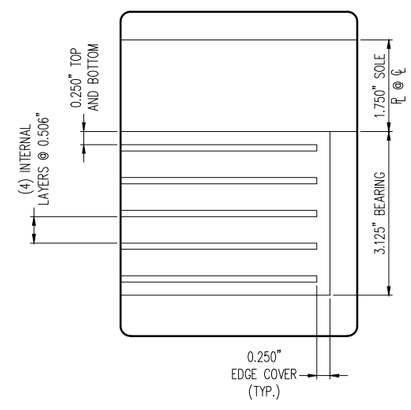

DETAIL 'A'

T.Y. LIN INTERNATIONAL

THE STAMPED DOCUMENTS ARE HEREBY:

____ APPROVED
__X__ APPROVED AS NOTED
____ REVISE AND RESUBMIT

SEE TRANSMITTAL FOR ADDITIONAL INFORMATION AS APPLICABLE.

THIS REVIEW IS FOR GENERAL CONFORMANCE WITH DESIGN CONCEPT ONLY. ANY DEVIATION FROM THE PLANS OR SPECIFICATIONS NOT CLEARLY NOTED BY THE CONTRACTOR HAS NOT BEEN REVIEWED. REVIEW BY THE ENGINEER SHALL NOT RELIEVE THE CONTRACTOR OF THE CONTRACTUAL RESPONSIBILITY FOR ANY ERRORS OR DEVIATION FROM THE CONTRACT REQUIREMENTS.

RICK HEBERT — REVIEWER
1/21/2015 — DATE

SEE SHEET 45651-1104-GN1 FOR GENERAL NOTES

REV.	DESCRIPTION	DATE	DET.	CKD.

Vermont Agency of Transportation
Elastomeric Bearing Assembly Shop Drawings - 2015-1-21 Rev
RECEIVED
ON: January 7, 2015
and Checked for
CONFORMANCE
BY: D Bonneau DATE: 01/26/2015

D.S. BROWN
A GIBRALTAR INDUSTRIES COMPANY
THE D.S. BROWN COMPANY
300 E. CHERRY STREET
NORTH BALTIMORE, OHIO 45872
419.257.3561
FAX: 419.257.0332
WWW.DSBROWN.COM

	ITEM	QUANTITY
LOCATION — BENMONT AVE. (TH-7) (URBAN MINOR ARTERIAL)	–	–
BRIDGE — 57	–	–
PROJECT NAME — BENNINGTON	–	–
PROJECT NO. — BRF 1000 (16)	–	–
P.O. NO. — 2014-086-004	–	–
DESIGNER — TY-LIN INTERNATIONAL	–	–
CUSTOMER — ALPINE CONSTRUCTION, LLC	–	–

DESCRIPTION: VERSIFLEX ELASTOMERIC BEARING
BENNINGTON COUNTY, VT

SCALE:	DRAWN BY:	CHECKED BY:	DATE:	
N.T.S.	SP	EAK	1/15	–

PROJECT NUMBER	PRODUCT CODE	RELEASE	SHEET
45651	1104	–	01

MK	QTY	DESCRIPTION	MATERIAL	LENGTH	REMARKS	WT*	REV
2A	3	VERSIFLEX ELASTOMERIC BEARING	45651.1104.2			376	
2a1	3	3.125" X 18.000"	NATURAL RUBBER	14.000"	60+/-5 DURO GR.4	32	
2a2	15	11 GA. X 17.500"	A1011 GR 50	13.500"	PLAIN	8	
2sb1	6	2.500" X 5.000"	M270 GR 50W (A709)	7.000"	M111-HDG (A123)	25	
2sp1	3	1.809" X 31.000"	M270 GR 50W (A709)	16.000"	M111-HDG (A123)	254	
2B	3	VERSIFLEX ELASTOMERIC BEARING				379	
2a1	3	3.125" X 18.000"	NATURAL RUBBER	14.000"	60+/-5 DURO GR.4	32	
2a2	15	11 GA. X 17.500"	A1011 GR 50	13.500"	PLAIN	8	
2sb1	6	2.500" X 5.000"	M270 GR 50W (A709)	7.000"	M111-HDG (A123)	25	
2sp2	3	1.834" X 31.000"	M270 GR 50W (A709)	16.000"	M111-HDG (A123)	258	
		*Approx. Gross Wt. Lbs Per Single Unit			1/5/15 2:37:03 PM		

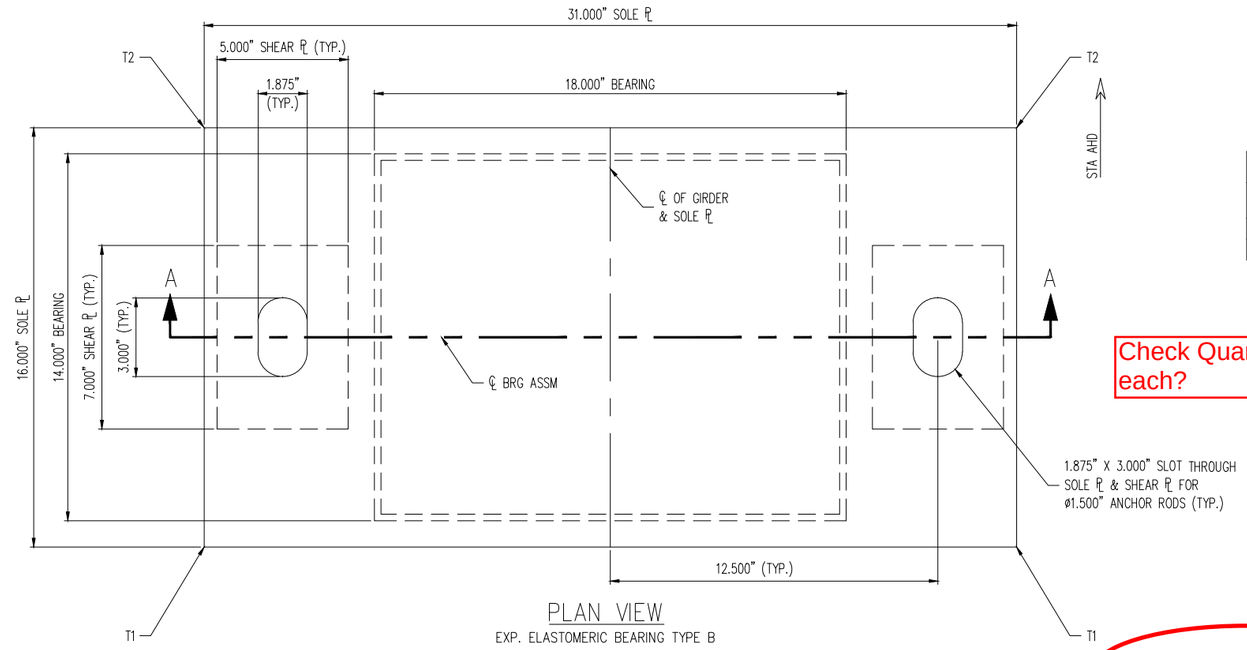

PLAN VIEW

EXP. ELASTOMERIC BEARING TYPE B
(3) REQ'D @ PIER 1; G2-G4
(3) REQ'D @ PIER 2; G2-G4
(6) REQ'D TOTAL

BEARING SCHEDULE				
LOCATION	SOLE PL PC MK	QTY	T1	T2
PIER 1; G2-G4	2sp1	2	1.691"	1.809"
PIER 2; G2-G4	2sp2	2	1.834"	1.666"

Check Quantity. 3 each?

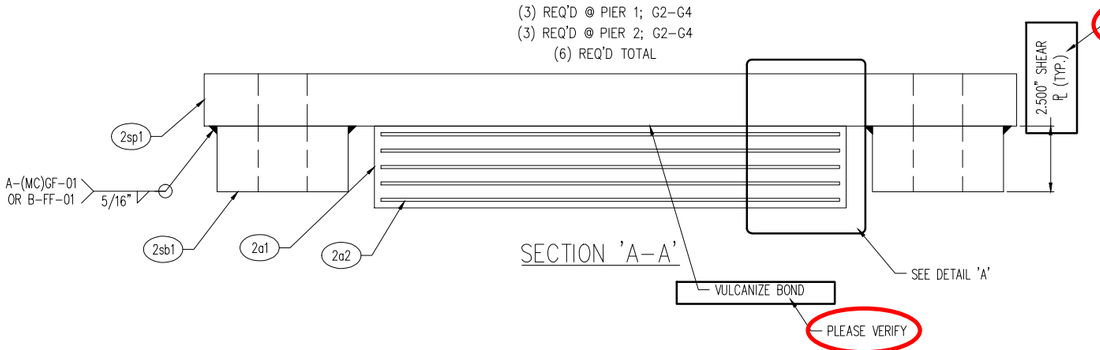

SECTION 'A-A'

2.5" Shear Plate Thickness is correct

Yes, Acceptable

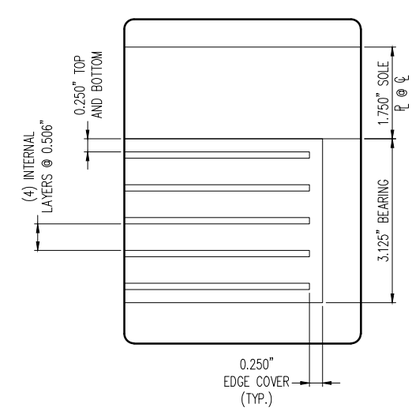

DETAIL 'A'

T.Y. LIN INTERNATIONAL

THE STAMPED DOCUMENTS ARE HEREBY:

____ APPROVED
_X_ APPROVED AS NOTED
____ REVISE AND RESUBMIT

SEE TRANSMITTAL FOR ADDITIONAL INFORMATION AS APPLICABLE.

THIS REVIEW IS FOR GENERAL CONFORMANCE WITH DESIGN CONCEPT ONLY. ANY DEVIATION FROM THE PLANS OR SPECIFICATIONS NOT CLEARLY NOTED BY THE CONTRACTOR HAS NOT BEEN REVIEWED. REVIEW BY THE ENGINEER SHALL NOT RELIEVE THE CONTRACTOR OF THE CONTRACTUAL RESPONSIBILITY FOR ANY ERRORS OR DEVIATION FROM THE CONTRACT REQUIREMENTS.

RICK HEBERT — REVIEWER
1/21/2015 — DATE

SEE SHEET 45651-1104-GN1 FOR GENERAL NOTES
SEE SHEET 45651-1104-03 FOR ANCHOR ROD ASSEMBLY

Vermont Agency of Transportation

Elastomeric Bearing Assembly Shop Drawings - 2015-0-23 16:

RECEIVED
ON: January 7, 2015
and Checked for
CONFORMANCE
BY: D Bonneau DATE: 01/26/2015

REV.	DESCRIPTION	DATE	DET.	CKD.

D.S. BROWN
A GIBRALTAR INDUSTRIES COMPANY

THE D.S. BROWN COMPANY
300 E. CHERRY STREET
NORTH BALTIMORE, OHIO 45872
419.257.3561
FAX: 419.257.0332
WWW.DSBROWN.COM

LOCATION — BENMONT AVE. (TH-7) (URBAN MINOR ARTERIAL)
BRIDGE — 57
PROJECT NAME — BENNINGTON
PROJECT NO. — BRF 1000 (16)
P.O. NO. — 2014-086-004
DESIGNER — TY-LIN INTERNATIONAL
CUSTOMER — ALPINE CONSTRUCTION, LLC

ITEM	QUANTITY
–	–
–	–
–	–
–	–
–	–
–	–
–	–
–	–
–	–
–	–

DESCRIPTION: VERSIFLEX ELASTOMERIC BEARING
BENNINGTON COUNTY, VT

SCALE:	DRAWN BY:	CHECKED BY:	DATE:	
N.T.S.	SP	EAK	1/15	–
PROJECT NUMBER	PRODUCT CODE	RELEASE	SHEET	
45651	1104	–	02	

MK	QTY	DESCRIPTION	MATERIAL	LENGTH	REMARKS	WT*	REV
3A	12	SINGLE END ROD				13	
3ar1	12	Ø1.500" X 25.000" SINGLE END ROD	M314 GR 55 (F1554)		8" THRD; M232-HDG (A153)	13	
3B	24	HEX NUT				1	
3hn1	24	Ø1.500" HEX NUT	M291-DH OR M292-2H (A563 OR A194) HEAVY HEX		M232-HDG (A153), DRY LUBE & DYE	1	
3C	12	WASHER PLATE				2	
3wp1	12	0.250" X 7.000"	M183 (A36)	4.000"	Ø1.625" HOLE CTR.; M111-HDG (A123)	2	
		*Approx. Gross Wt. Lbs Per Single Unit			1/5/15 2:37:03 PM		

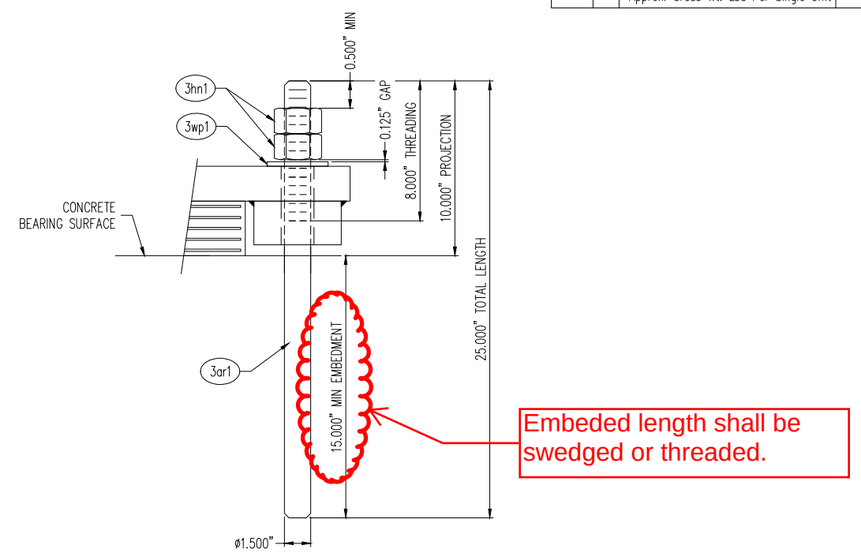

ANCHOR ROD ASSEMBLY

(6) REQ'D @ PIER 1; G2-G4
(6) REQ'D @ PIER 2; G2-G4
(12) REQ'D TOTAL

SEE SHEET 45651-1104-GN1 FOR GENERAL NOTES

Vermont Agency of Transportation

RECEIVED

ON: January 7, 2015

and Checked for

CONFORMANCE

BY: D Bonneau DATE: 01/26/2015

T.Y. LIN INTERNATIONAL

THE STAMPED DOCUMENTS ARE HEREBY:

_____ APPROVED
__X__ APPROVED AS NOTED
_____ REVISE AND RESUBMIT

SEE TRANSMITTAL FOR ADDITIONAL INFORMATION AS APPLICABLE.

THIS REVIEW IS FOR GENERAL CONFORMANCE WITH DESIGN CONCEPT ONLY. ANY DEVIATION FROM THE PLANS OR SPECIFICATIONS NOT CLEARLY NOTED BY THE CONTRACTOR HAS NOT BEEN REVIEWED. REVIEW BY THE ENGINEER SHALL NOT RELIEVE THE CONTRACTOR OF THE CONTRACTUAL RESPONSIBILITY FOR ANY ERRORS OR DEVIATION FROM THE CONTRACT REQUIREMENTS.

RICK HEBERT — REVIEWER
1/21/2015 — DATE

REV.	DESCRIPTION	DATE	DET.	CKD.

D.S. BROWN
A GIBRALTAR INDUSTRIES COMPANY
THE D.S. BROWN COMPANY
300 E. CHERRY STREET
NORTH BALTIMORE, OHIO 45872
419.257.3561
FAX: 419.257.0332
WWW.DSBROWN.COM

	ITEM	QUANTITY
LOCATION — BENMONT AVE. (TH-7) (URBAN MINOR ARTERIAL)	–	–
BRIDGE — 57	–	–
PROJECT NAME — BENNINGTON	–	–
PROJECT NO. — BRF 1000 (16)	–	–
P.O. NO. — 2014-086-004	–	–
DESIGNER — TY-LIN INTERNATIONAL	–	–
CUSTOMER — ALPINE CONSTRUCTION, LLC	–	–
	–	–

DESCRIPTION: ANCHOR ROD ASSEMBLY
BENNINGTON COUNTY, VT

SCALE:	DRAWN BY:	CHECKED BY:	DATE:	
N.T.S.	SP	EAK	1/15	–

PROJECT NUMBER	PRODUCT CODE	RELEASE	SHEET
45651	1104	–	03