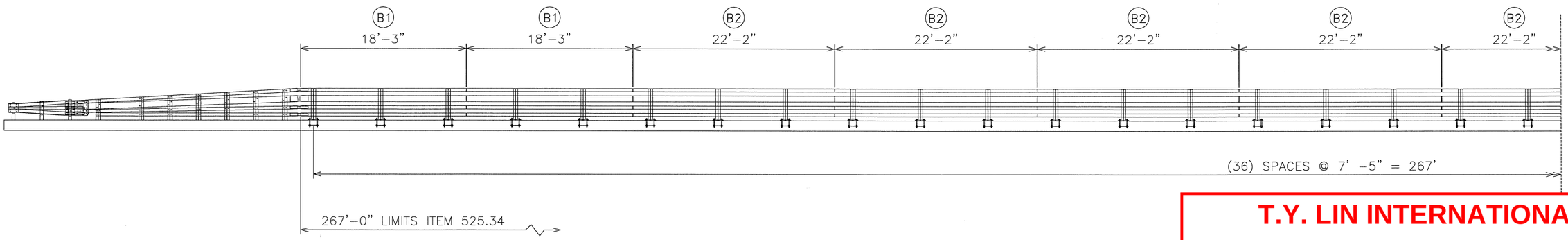

B.I.N. 57

TYPICAL RAILING ELEVATION

LOOKING AT FACE OF RAIL FROM CENTERLINE OF ROAD

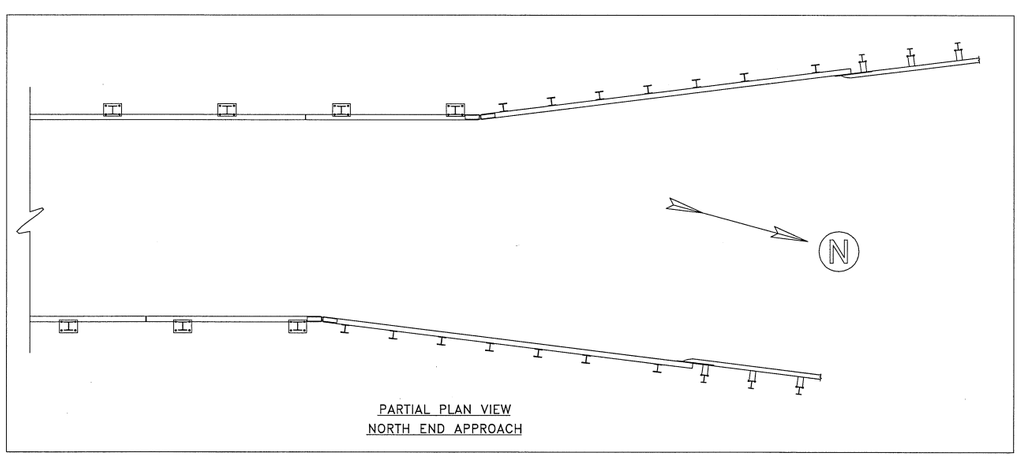

PARTIAL PLAN VIEW
NORTH END APPROACH

Vermont Agency of Transportation
RECEIVED
ON: March 25, 2015
and Checked for
CONFORMANCE
BY: TY Lin DATE: 03/30/15

T.Y. LIN INTERNATIONAL

THE STAMPED DOCUMENTS ARE HEREBY:

____ APPROVED
_X_ APPROVED AS NOTED
____ REVISE AND RESUBMIT

SEE TRANSMITTAL FOR ADDITIONAL INFORMATION AS APPLICABLE.

THIS REVIEW IS FOR GENERAL CONFORMANCE WITH DESIGN CONCEPT ONLY. ANY DEVIATION FROM THE PLANS OR SPECIFICATIONS NOT CLEARLY NOTED BY THE CONTRACTOR HAS NOT BEEN REVIEWED. REVIEW BY THE ENGINEER SHALL NOT RELIEVE THE CONTRACTOR OF THE CONTRACTUAL RESPONSIBILITY FOR ANY ERRORS OR DEVIATION FROM THE CONTRACT REQUIREMENTS.

RICK HEBERT — REVIEWER
3/30/2015 — DATE

REVISIONS

No.	Remarks	Date
RevA	Notation Corrections	3/27/15
0	Initial submittal	3/2/15

HIGHWAY SAFETY CORP
GLASTONBURY, CT
860-633-9445

ITEM 525.34 4-BAR BRIDGE RAIL
BRIDGE IMPROVEMENT
BENMONT AVE. (TH-7) (URBAN MINOR ARTERIAL)
B.I.N. 57 P.I.N. BRF 1000 (16)
TOWN OF BENNINGTON, BENNINGTON COUNTY

AISC CERTIFIED FABRICATOR

HSC JOB NO. 2026

GENERAL CONTRACTOR

SUB CONTRACTOR LAFAYETTE

SHEET NO. 1 of 6

DRAWN MKT | CHECKED | DATE 2-17-15 | SCALE NONE | SIZE D

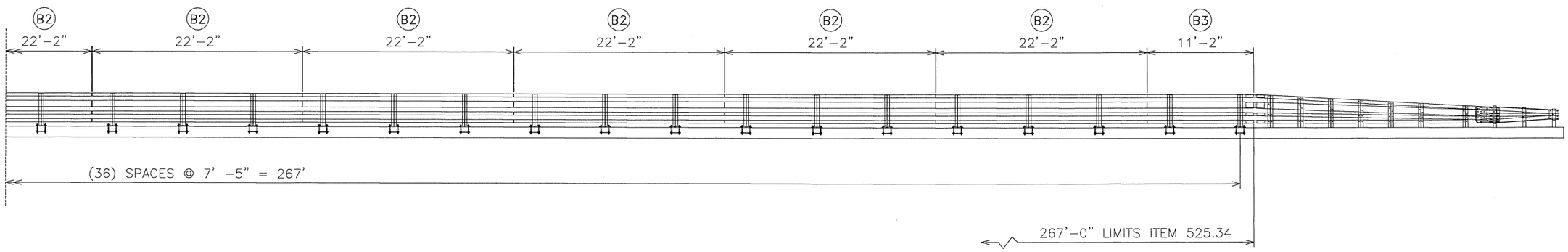

B.I.N. 57

TYPICAL RAILING ELEVATION

LOOKING AT FACE OF RAIL FROM CENTERLINE OF ROAD

T.Y. LIN INTERNATIONAL

THE STAMPED DOCUMENTS ARE HEREBY:

____ APPROVED
_X_ APPROVED AS NOTED
____ REVISE AND RESUBMIT

SEE TRANSMITTAL FOR ADDITIONAL INFORMATION AS APPLICABLE.

THIS REVIEW IS FOR GENERAL CONFORMANCE WITH DESIGN CONCEPT ONLY. ANY DEVIATION FROM THE PLANS OR SPECIFICATIONS NOT CLEARLY NOTED BY THE CONTRACTOR HAS NOT BEEN REVIEWED. REVIEW BY THE ENGINEER SHALL NOT RELIEVE THE CONTRACTOR OF THE CONTRACTUAL RESPONSIBILITY FOR ANY ERRORS OR DEVIATION FROM THE CONTRACT REQUIREMENTS.

RICK HEBERT — REVIEWER
3/30/2015 — DATE

Vermont Agency of Transportation
RECEIVED
ON: March 25, 2015
and Checked for
CONFORMANCE
BY: TY Lin DATE: 03/30/15

HIGHWAY SAFETY CORP
GLASTONBURY, CT
860-633-9445

ITEM 525.34 4-BAR BRIDGE RAIL
BRIDGE IMPROVEMENT
BENMONT AVE. OVER ROARING BRANCH RIVER
B.I.N. 57 P.I.N. BRF 1000 (16)
TOWN OF BENNINGTON, BENNINGTON COUNTY

AISC CERTIFIED FABRICATOR

HSC JOB NO. 2026

GENERAL CONTRACTOR

SUB CONTRACTOR LAFAYETTE

SHEET NO. 2 of 6

DRAWN	CHECKED	DATE	SCALE	SIZE
MKT		2-17-15	NONE	D

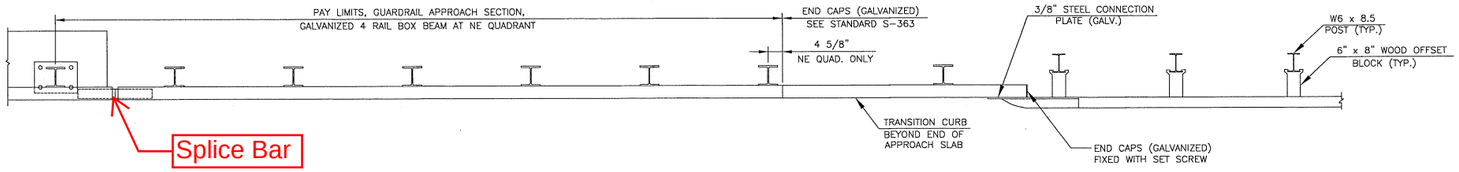

PLAN VIEW – APPROACH RAIL

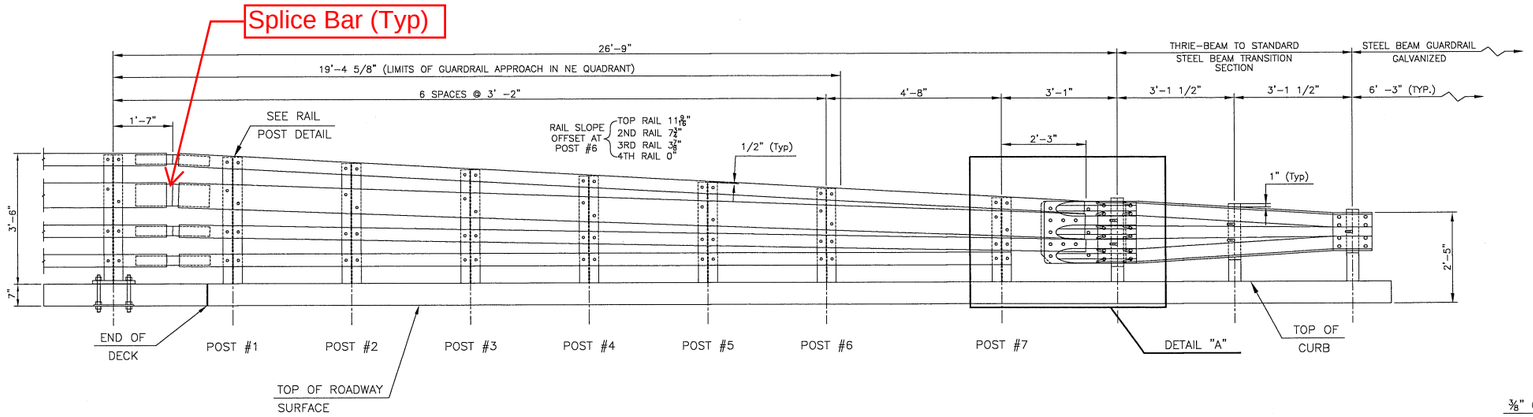

ELEVATION VIEW – NE & SE APPROACH RAIL

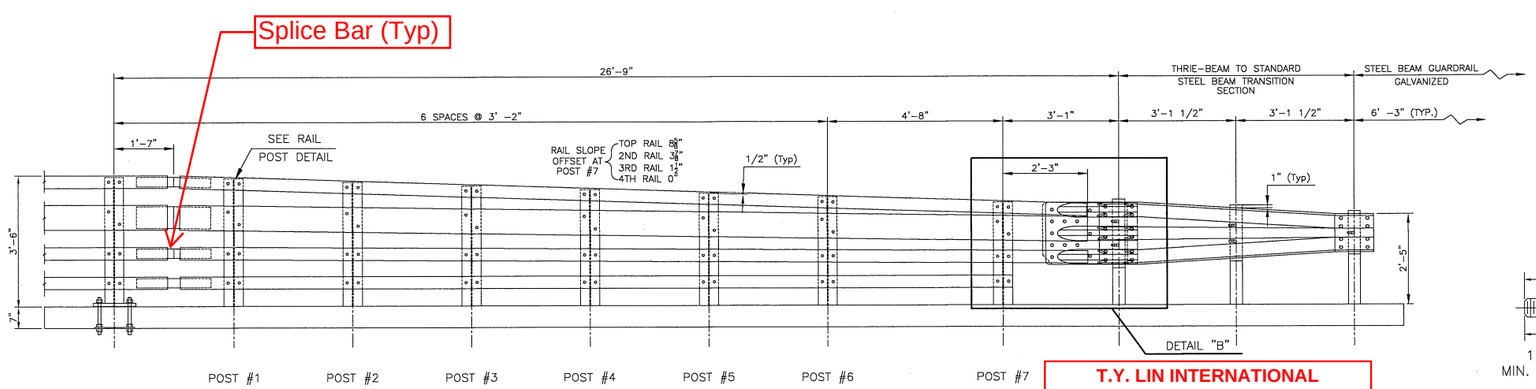

ELEVATION VIEW – NW & SW APPROACH RAIL

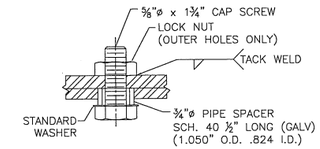

SPLICE BOLT
SECTION

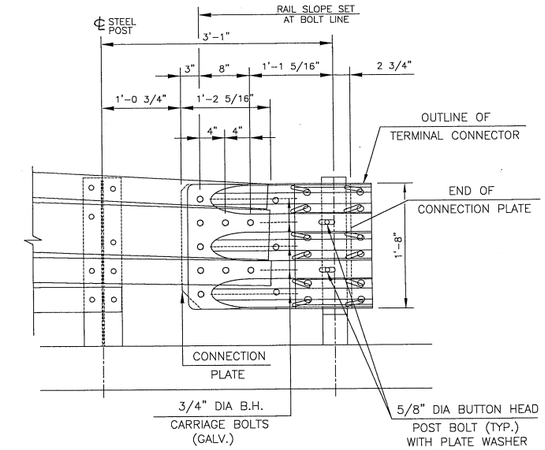

DETAIL A

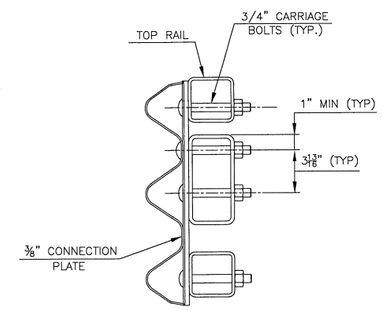

SECTION C–C
CONNECTION PLATE

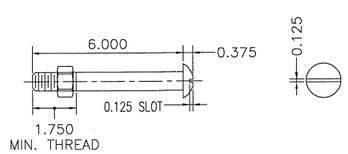

3/4" DIA. A449
ROUND HEAD BOLT
(WITH WASHER AND PREVAILING TORQUE TYPE LOCK NUT)
(SEE NOTE #8)
ONLY FULL DIAMETER BODY BOLTS WILL BE ALLOWED.

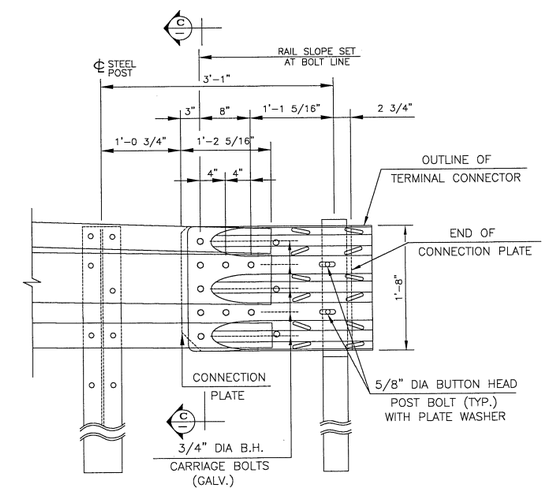

DETAIL B

Vermont Agency of Transportation
RECEIVED
ON: March 25, 2015
and Checked for
CONFORMANCE
BY: TY Lin DATE: 03/30/15

T.Y. LIN INTERNATIONAL

THE STAMPED DOCUMENTS ARE HEREBY:

___ APPROVED
X APPROVED AS NOTED
___ REVISE AND RESUBMIT

SEE TRANSMITTAL FOR ADDITIONAL INFORMATION AS APPLICABLE.

THIS REVIEW IS FOR GENERAL CONFORMANCE WITH DESIGN CONCEPT ONLY. ANY DEVIATION FROM THE PLANS OR SPECIFICATIONS NOT CLEARLY NOTED BY THE CONTRACTOR HAS NOT BEEN REVIEWED. REVIEW BY THE ENGINEER SHALL NOT RELIEVE THE CONTRACTOR OF THE CONTRACTUAL RESPONSIBILITY FOR ANY ERRORS OR DEVIATION FROM THE CONTRACT REQUIREMENTS.

RICK HEBERT — REVIEWER
3/30/2015 — DATE

NOTES:

1. PAYMENT FOR GUARDRAIL APPROACH SECTION, GALVANIZED 4 RAIL BOX BEAM SHALL INCLUDE THE TERMINAL CONNECTOR, THE CONNECTION PLATE, RAIL, POSTS, BLOCKS AND ATTACHMENT HARDWARE.

2. ALL BRIDGE APPROACH RAIL MATERIALS, DIMENSIONS, SIZES, AND NOTES SHALL BE THE SHAME AS THOSE OF THE BRIDGE RAIL UNLESS OTHERWISE NOTED.

3. APPROACH RAIL BOLTS SHALL BE ASTM A307 GRADE A AND NUTS SHALL BE AASHTO M291 (ASTM A563 GRADE A OR BETTER) (GALVANIZED). WASHERS SHALL BE ASTM F844

4. FABRICATE SPLICE BARS TO MATCH BEND ANGLES USING A COMPLETE PENETRATION (B–U2) WELDED SPLICE AT CENTERLINE OF RAIL EXPANSION JOINT. NORTH APPROACH SPLICES ALSO BEND IN PLAN; REFER TO DETAIL SHEET FOR BEND ANGLES.

LEGEND:

NW	NORTH WEST
NE	NORTH EAST
SW	SOUTH WEST
SE	SOUTH EAST

HIGHWAY SAFETY CORP
GLASTONBURY, CT
860–633–9445

ITEM 525.34 4–BAR BRIDGE RAIL
BRIDGE IMPROVEMENT
BENMONT AVE. OVER ROARING BRANCH RIVER
B.I.N. 57 P.I.N. BRF 1000 (16)
TOWN OF BENNINGTON, BENNINGTON COUNTY

AISC CERTIFIED FABRICATOR

GENERAL CONTRACTOR

SUB CONTRACTOR: LAFAYETTE

HSC JOB NO. 2026

SHEET NO. 3 of 6

DRAWN	CHECKED	DATE	SCALE	SIZE
MKT		2–17–15	NONE	D

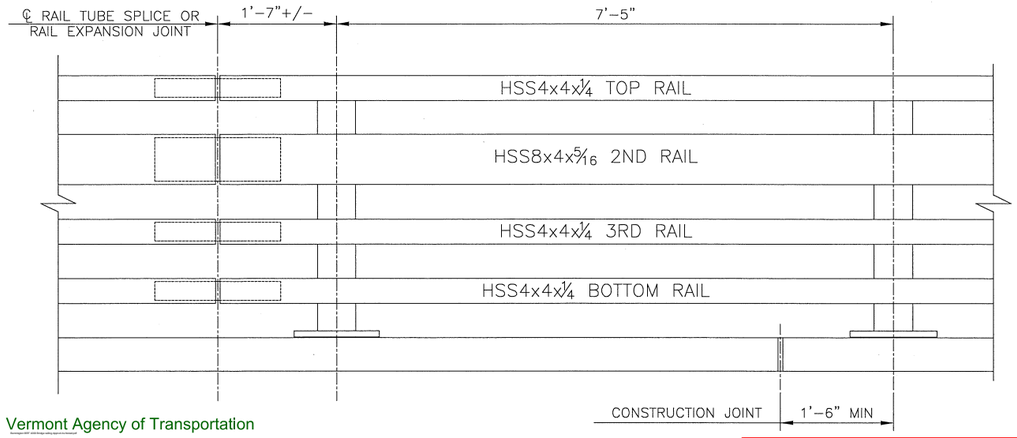

BRIDGE RAILING ELEVATION

Vermont Agency of Transportation
RECEIVED
ON: March 25, 2015
and Checked for
CONFORMANCE
BY: TY Lin DATE: 03/30/15

T.Y. LIN INTERNATIONAL

THE STAMPED DOCUMENTS ARE HEREBY:

___ APPROVED
_X_ APPROVED AS NOTED
___ REVISE AND RESUBMIT

SEE TRANSMITTAL FOR ADDITIONAL INFORMATION AS APPLICABLE.

THIS REVIEW IS FOR GENERAL CONFORMANCE WITH DESIGN CONCEPT ONLY. ANY DEVIATION FROM THE PLANS OR SPECIFICATIONS NOT CLEARLY NOTED BY THE CONTRACTOR HAS NOT BEEN REVIEWED. REVIEW BY THE ENGINEER SHALL NOT RELIEVE THE CONTRACTOR OF THE CONTRACTUAL RESPONSIBILITY FOR ANY ERRORS OR DEVIATION FROM THE CONTRACT REQUIREMENTS.

RICK HEBERT — REVIEWER
3/30/2015 — DATE

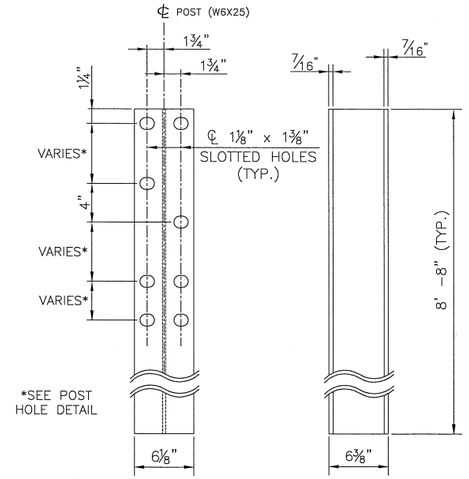

RAIL POST
(NOT TO SCALE)

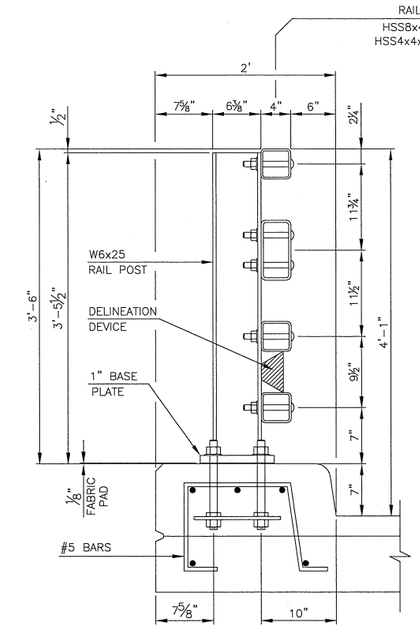

TYPICAL SECTION

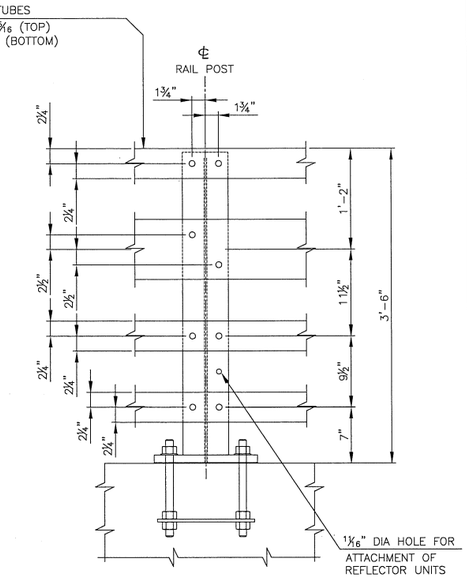

PARTIAL RAIL ELEVATION

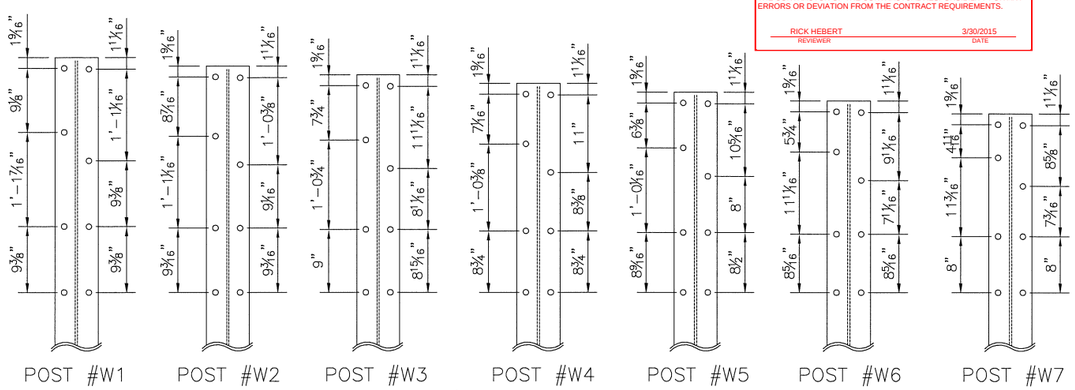

WEST APPROACH POST HOLE DETAIL

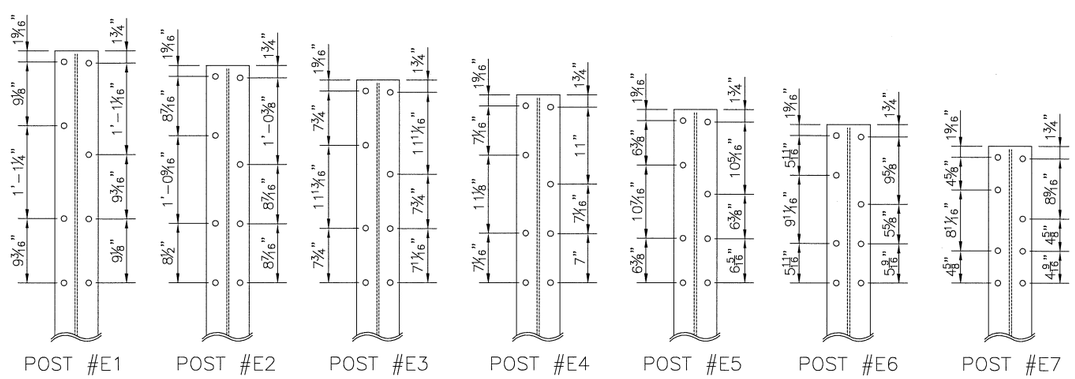

EAST APPROACH POST HOLE DETAIL

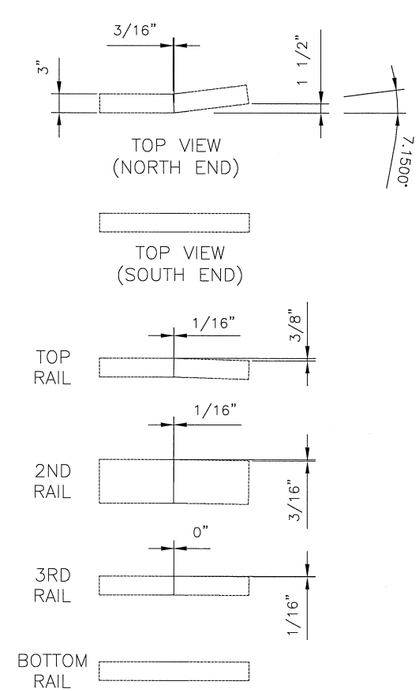

WEST APPROACH SPLICE TUBES

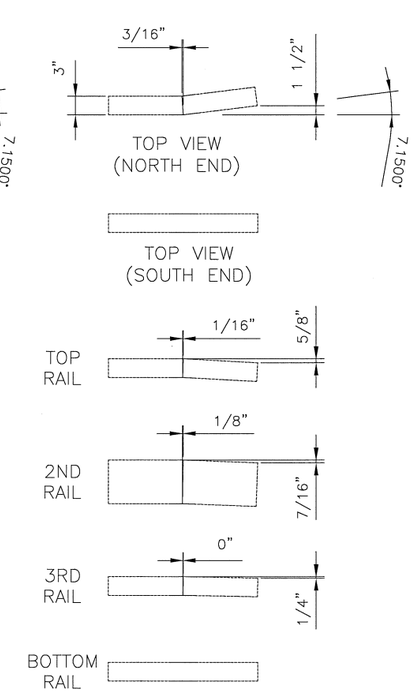

EAST APPROACH SPLICE TUBES

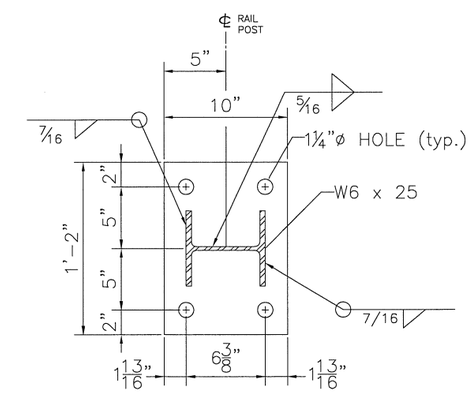

POST BASE PLATE
1" x 10" x 14" BASE PLATE

NOTE:
BEARING PAD TO HAVE SAME SHAPE AND DIMENSIONS AS BASE PLATE.

HIGHWAY SAFETY CORP
GLASTONBURY, CT
860-633-9445

ITEM 525.34 4-BAR BRIDGE RAIL
BRIDGE IMPROVEMENT
BENMONT AVE. OVER ROARING BRANCH RIVER
B.I.N. 57 P.I.N. BRF 1000 (16)
TOWN OF BENNINGTON, BENNINGTON COUNTY

AISC CERTIFIED FABRICATOR

GENERAL CONTRACTOR
SUB CONTRACTOR: LAFAYETTE

HSC JOB NO. 2026
SHEET NO. 4 of 6

DRAWN	CHECKED	DATE	SCALE	SIZE
MKT		2-17-15	NONE	D

BILL OF MATERIAL

EAST RAIL APPROACH

QUANTITY = 2

NE	SE	mk	Description	Spec.
1	1	E1	END POST W6x25 8'-8" OAH (GALV)	A572 gr 50
1	1	E2	END POST W6x25 8'-8" OAH (GALV)	A572 gr 50
1	1	E3	END POST W6x25 8'-8" OAH (GALV)	A572 gr 50
1	1	E4	END POST W6x25 8'-8" OAH (GALV)	A572 gr 50
1	1	E5	END POST W6x25 8'-8" OAH (GALV)	A572 gr 50
1	1	E6	END POST W6x25 8'-8" OAH (GALV)	A572 gr 50
1	1	E7	END POST W6x25 8'-8" OAH (GALV)	A572 gr 50
0	1		SPLICE TUBE FOR 4x4 RAIL (GALV) angled TS 3x3x5/16 1'-11.750" LG w/ 2 WELDED NUTS	A500 gr B
0	1		SPLICE TUBE FOR 8x4 RAIL (GALV) angled TS 7x3x3/8 1'-11.750" LG w/ 2 WELDED NUTS	A500 gr B
0	1		SPLICE TUBE FOR 4x4 RAIL (GALV) angled TS 3x3x5/16 1'-11.750" LG w/ 2 WELDED NUTS	A500 gr B
0	1		SPLICE TUBE FOR 4x4 RAIL (GALV) angled TS 3x3x5/16 1'-11.750" LG w/ 2 WELDED NUTS	A500 gr B
1	0		SPLICE TUBE FOR TOP 4x4 RAIL (GALV) double angled TS 3x3x5/16 1'-11.750" LG w/ 2 WELDED NUTS	A500 gr B
1	0		SPLICE TUBE FOR 8x4 RAIL (GALV) double angled TS 7x3x3/8 1'-11.750" LG w/ 2 WELDED NUTS	A500 gr B
1	0		SPLICE TUBE FOR 3RD 4x4 RAIL (GALV) double angled TS 3x3x5/16 1'-11.750" LG w/ 2 WELDED NUTS	A500 gr B
1	0		SPLICE TUBE FOR BOTTOM 4x4 RAIL (GALV) angled TS 3x3x5/16 1'-11.750" LG w/ 2 WELDED NUTS	A500 gr B
1	1		UPPER RAIL APPROACH TUBE HSS 4 x 4 x 1/25 x 24'-2" w/ 3.500 SLOTS FOR 4" EXP GAP (GALV)	A500 gr B
1	1		UPPER MIDDLE RAIL APPROACH TUBE HSS 8 x 4 x 5/16 x 24'-2.000" (GALV)	A500 gr B
1	1		LOWER MIDDLE RAIL APPROACH 4 x 4 x 1/25 x 24'-2" (Galv)	A500 gr B
1	1		LOWER RAIL APPROACH TUBE HSS 4 x 4 x 5/16 x 22'-2.000" w/ 3.500 SLOTS FOR 4" EXP GAP (GALV)	A500 gr B
1	1		BACK PLATE	A36
1	1		END CAP 3/16"x4"x8" w/ 4x 1"x1"x.125" TABS (GALV)	A36
3	3		END CAP 3/16"x4"x4" w/ 4x 1"x1"x.125" TABS (GALV)	A36
1	1		THRIE POST W6x8.5# x 7'-0" (GALV)	A572, Gr 50
1	1		TRANSITION POST W6x8.5# x 7'-0" (GALV)	A572, Gr 50
1	1		STANDARD POST W6x8.5# x 7'-0" (GALV)	A572, Gr 50
1	1		WOOD BLOCK 6" X 8" X 21.5" OFFSET ROUTED	WOOD
1	1		WOOD BLOCK THRIE 6" X 8" X 18" ROUTED FOR TRANSITION POST	WOOD
1	1		WOOD BLOCK 6" X 8" X 14" ROUTED	WOOD
1	1		TERMINAL CONNECTOR 10 Ga. (with slotted holes)	M180 B2
1	1		THRIE TRANSITION PANEL 10 Ga.	M180 B2
32	32		3/4" SLOTTED HEAD BOLT (GALV.) 0.75" DIA. X 6.00" LG. NO SHLDR	A325
20	20		5/8" GUARDRAIL SPLICE BOLT (GALV.) 0.625" DIA. X 1.750" LG. W/ NUT	A307
16	16		3/4" SPACER PIPE 0.750" DIA. (SCH 40) X 0.5" LG.	A53 gr B
64	64		3/4" HEAVY HEX NUT (GALV.) 0.750" DIA.	A563 DH
20	20		5/8" DBL. RECESSED NUT (GALV.) 0.625" DIA.	A563 DH
1	1		3/4" ROUND HEAD BOLT (GALV.) 0.750" DIA. X 2.000" LG.	A307
6	6		POST BOLT 0.625" x 11" x 9.5" HDG (5/8)	A307

WEST RAIL APPROACH

QUANTITY = 2

NW	SW	mk	Description	Spec.
1	1	W1	END POST W6x25 8'-8" OAH (GALV)	A572 gr 50
1	1	W2	END POST W6x25 8'-8" OAH (GALV)	A572 gr 50
1	1	W3	END POST W6x25 8'-8" OAH (GALV)	A572 gr 50
1	1	W4	END POST W6x25 8'-8" OAH (GALV)	A572 gr 50
1	1	W5	END POST W6x25 8'-8" OAH (GALV)	A572 gr 50
1	1	W6	END POST W6x25 8'-8" OAH (GALV)	A572 gr 50
1	1	W7	END POST W6x25 8'-8" OAH (GALV)	A572 gr 50
0	1		SPLICE TUBE FOR 4x4 RAIL (GALV) angled TS 3x3x5/16 1'-11.750" LG w/ 2 WELDED NUTS	A500 gr B
0	1		SPLICE TUBE FOR 8x4 RAIL (GALV) angled TS 7x3x3/8 1'-11.750" LG w/ 2 WELDED NUTS	A500 gr B
0	1		SPLICE TUBE FOR 4x4 RAIL (GALV) angled TS 3x3x5/16 1'-11.750" LG w/ 2 WELDED NUTS	A500 gr B
0	1		SPLICE TUBE FOR 4x4 RAIL (GALV) angled TS 3x3x5/16 1'-11.750" LG w/ 2 WELDED NUTS	A500 gr B
1	0		SPLICE TUBE FOR TOP 4x4 RAIL (GALV) double angled TS 3x3x5/16 1'-11.750" LG w/ 2 WELDED NUTS	A500 gr B
1	0		SPLICE TUBE FOR 8x4 RAIL (GALV) double angled TS 7x3x3/8 1'-11.750" LG w/ 2 WELDED NUTS	A500 gr B
1	0		SPLICE TUBE FOR 3RD 4x4 RAIL (GALV) double angled TS 3x3x5/16 1'-11.750" LG w/ 2 WELDED NUTS	A500 gr B
1	0		SPLICE TUBE FOR BOTTOM 4x4 RAIL (GALV) angled TS 3x3x5/16 1'-11.750" LG w/ 2 WELDED NUTS	A500 gr B
1	1		UPPER RAIL APPROACH TUBE HSS 4 x 4 x 1/25 x 9'-4.000" w/ 3.500 SLOTS FOR 4" EXP GAP (GALV)	A500 gr B
1	1		UPPER MIDDLE RAIL APPROACH TUBE HSS 8 x 4 x 5/16 x 9'-4.000" (GALV)	A500 gr B
1	1		LOWER MIDDLE RAIL APPROACH 4 x 4 x 1/25 (Galv)	A500 gr B
1	1		LOWER RAIL APPROACH TUBE HSS 4 x 4 x 5/16 x 22'-2.000" w/ 3.500 SLOTS FOR 4" EXP GAP (GALV)	A500 gr B
1	1		BACK PLATE	A36
1	1		END CAP 3/16"x4"x8" w/ 4x 1"x1"x.125" TABS (GALV)	A36
3	3		END CAP 3/16"x4"x4" w/ 4x 1"x1"x.125" TABS (GALV)	A36
1	1		THRIE POST W6x8.5# x 7'-0" (GALV)	A572, Gr 50
1	1		TRANSITION POST W6x8.5# x 7'-0" (GALV)	A572, Gr 50
1	1		STANDARD POST W6x8.5# x 7'-0" (GALV)	A572, Gr 50
1	1		WOOD BLOCK 6" X 8" X 21.5" OFFSET ROUTED	WOOD
1	1		WOOD BLOCK THRIE 6" X 8" X 18" ROUTED FOR TRANSITION POST	WOOD
1	1		WOOD BLOCK 6" X 8" X 14" ROUTED	WOOD
1	1		TERMINAL CONNECTOR 10 Ga. (with slotted holes)	M180 B2
1	1		THRIE TRANSITION PANEL 10 Ga.	M180 B2
31	31		3/4" SLOTTED HEAD BOLT (GALV.) 0.75" DIA. X 6.00" LG. NO SHLDR	A325
20	20		5/8" GUARDRAIL SPLICE BOLT (GALV.) 0.625" DIA. X 1.750" LG. W/ NUT	A307
16	16		3/4" SPACER PIPE 0.750" DIA. (SCH 40) X 0.5" LG.	A53 gr B
64	64		3/4" HEAVY HEX NUT (GALV.) 0.750" DIA.	A563 DH
20	20		5/8" DBL. RECESSED NUT (GALV.) 0.625" DIA.	A563 DH
3	3		3/4" ROUND HEAD BOLT (GALV.) 0.750" DIA. X 2.000" LG.	A307
6	6		POST BOLT 0.625" x 11" x 9.5" HDG (5/8)	A307

Vermont Agency of Transportation
RECEIVED
ON: March 25, 2015
and Checked for
CONFORMANCE
BY: TY Lin DATE: 03/30/15

T.Y. LIN INTERNATIONAL

THE STAMPED DOCUMENTS ARE HEREBY:

____ APPROVED
_X_ APPROVED AS NOTED
____ REVISE AND RESUBMIT

SEE TRANSMITTAL FOR ADDITIONAL INFORMATION AS APPLICABLE.

THIS REVIEW IS FOR GENERAL CONFORMANCE WITH DESIGN CONCEPT ONLY. ANY DEVIATION FROM THE PLANS OR SPECIFICATIONS NOT CLEARLY NOTED BY THE CONTRACTOR HAS NOT BEEN REVIEWED. REVIEW BY THE ENGINEER SHALL NOT RELIEVE THE CONTRACTOR OF THE CONTRACTUAL RESPONSIBILITY FOR ANY ERRORS OR DEVIATION FROM THE CONTRACT REQUIREMENTS.

RICK HEBERT — REVIEWER
3/30/2015 — DATE

4 RAIL

TOTAL PAY LENGTH ITEM 525.34 = 534 LF

W	E	mk	Description	Spec.
37	37		PED POST W6 x 25 x 3'-6" OAH WITH 1"x10"x14" BASE PLATE (GLV)	A572 gr 50
36	36		SPLICE TUBE FOR 4x4 RAIL (GALV) TS 3x3x5/16 0'-0" LG w/ 2 WELDED NUTS	A500 gr B
12	12		SPLICE TUBE FOR 8x4 RAIL (GALV) TS 7x3x3/8 0'-0" LG w/ 2 WELDED NUTS	A500 gr B
6	6	B1	TUBULAR STEEL RAIL (GLV) HSS 4 x 4 x 1/4 x 18'-3" OAL	A500 gr B
30	30	B2	TUBULAR STEEL RAIL (GLV) HSS 4 x 4 x 1/4 x 22'-2" OAL	A500 gr B
3	3	B3	TUBULAR STEEL RAIL (GLV) HSS 4 x 4 x 1/4 x 11'-2" OAL	A500 gr B
2	2	B1	TUBULAR STEEL RAIL (GLV) HSS 8 x 4 x 5/16 x 18'-3" OAL	A500 gr B
10	10	B2	TUBULAR STEEL RAIL (GLV) HSS 8 x 4 x 5/16 x 22'-2" OAL	A500 gr B
1	1	B3	TUBULAR STEEL RAIL (GLV) HSS 8 x 4 x 5/16 x 11'-2" OAL	A500 gr B
37	37		BR NEOPRENE PAD 0.125 x 10.00 x 14.00	neoprene
37	37		ANCHOR PLATE (GALV) PL .375 x 9.375 x 13.000 w/ 6.250 DIA. CTR HOLE	A36
148	148		ANCHOR STUD 1" DIA. x 12" LG. (GALV)	A449
296	296		HEAVY HEX NUT 1" DIA. (GALV)	A563 DH
148	148		JAMB NUTS 1" DIA. (GALV)	A563 DH
148	148		STANDARD WASHER 1" DIA.	F436
192	192		5/8" HEX HEAD BOLT (GALV.) 0.625" DIA. X 1.750" LG.	A325
296	296		3/4" ROUND HEAD BOLT (GALV.) 0.750" DIA. X 6.000" LG. NO SHLDR W/ TYPE A WASHER	A325
296	296		3/4" HEAVY HEX NUT (GALV.) 1" DIA.	A563 DH
74	74		5/8" HEX HEAD BOLT (GALV.) 0.625" DIA. X 5.5" LG. w/ 2 NUTS & 1 STANDARD WASHER	A325
96	96		5/8" GUARDRAIL SPLICE BOLT (GALV.) 0.625" DIA. X 1.750" LG. W/ NUT	A307

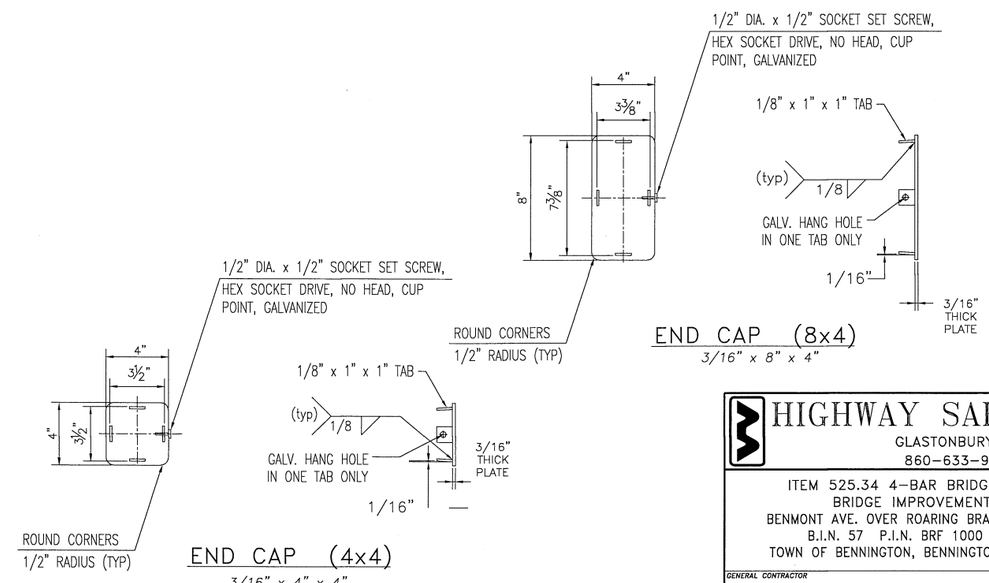

HIGHWAY SAFETY CORP
GLASTONBURY, CT
860-633-9445

ITEM 525.34 4-BAR BRIDGE RAIL
BRIDGE IMPROVEMENT
BENMONT AVE. OVER ROARING BRANCH RIVER
B.I.N. 57 P.I.N. BRF 1000 (16)
TOWN OF BENNINGTON, BENNINGTON COUNTY

AISC CERTIFIED FABRICATOR

GENERAL CONTRACTOR
SUB CONTRACTOR: LAFAYETTE

HSC JOB NO. 2026
SHEET NO. 5 of 6

DRAWN	CHECKED	DATE	SCALE	SIZE
MKT		2-17-15	NONE	D

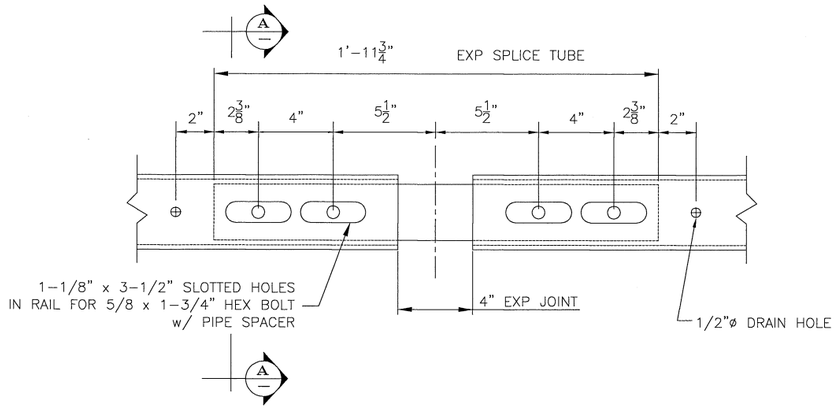

EXPANSION SPLICE DETAIL

BOTTOM VIEW

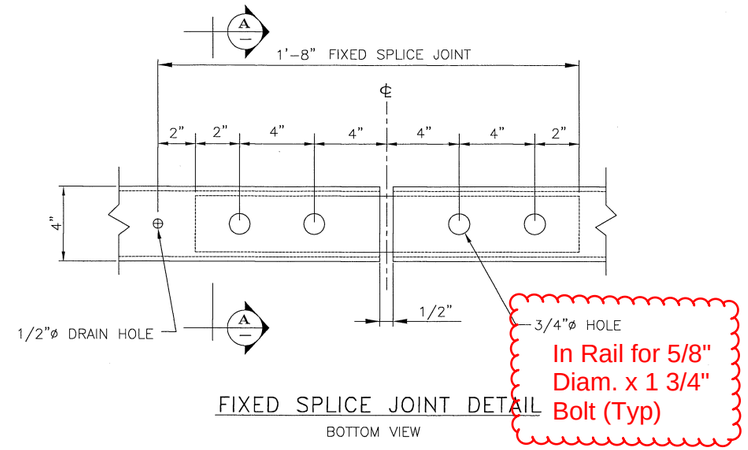

FIXED SPLICE JOINT DETAIL

BOTTOM VIEW

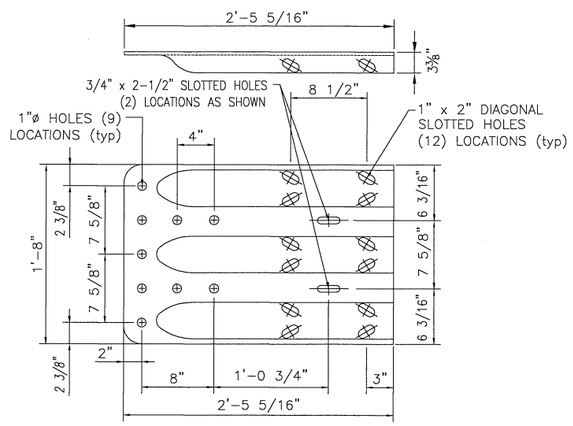

TERMINAL CONNECTOR

10 GAUGE (AASHTO M180 B2)

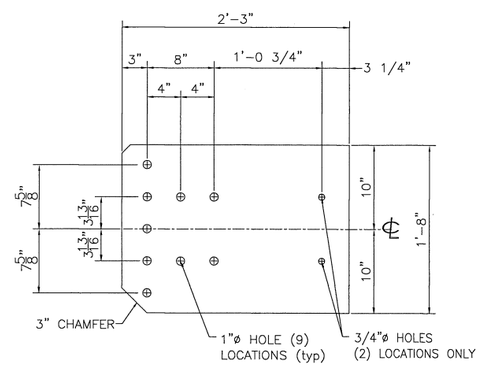

CONNECTION PLATE

3/8" x 1'-8" x 2'-3"

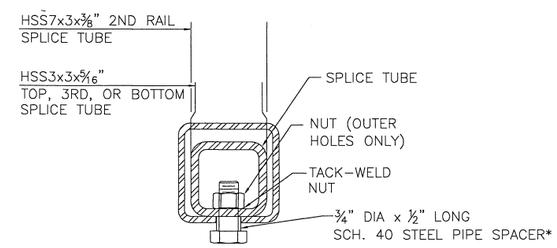

⅝" DIA TAPPED HOLE IN SPLICE TUBE
1⅛" x 3½" SLOT* OR ¾"ø HOLE**
IN RAIL TUBE FOR ⅝" DIA
BOLT AND PLAIN HARDENED WASHER

A–A RAIL TUBE SPLICE AND
RAIL EXPANSION JOINT SECTION

*EXPANSION JOINT
**SPLICE

NOTES:

1. ALL WORK AND MATERIALS SHALL CONFORM TO SECTION 525.

2. PRIOR TO GALVANIZING, ALL EXPOSED CUT OR SHEARED EDGES SHALL BE ROUNDED TO A 1/16" RADIUS AND BE FREE OF BURRS.

3. ALL POSTS SHALL BE SET NORMAL TO GRADE.

4. SECTIONS OF RAIL TUBE SHALL BE ATTACHED TO A MINIMUM OF TWO (2) RAIL POSTS AND PREFERABLY TO AT LEAST FOUR (4) POSTS.

5. RAIL TUBE EXPANSION JOINT SHALL BE PROVIDED IN ANY RAIL BAY SPANNING THE END OF AN INTEGRAL ABUTMENT BRIDGE AND AT ALL SUPERSTRUCTURE EXPANSION JOINTS. EXPANSION JOINT WIDTH SHALL BE 4" AT 45°F AND WILL BE ADJUSTED IN THE FIELD BY THE ENGINEER FOR OTHER TEMPERATURES.

6. HOLES IN RAILS FOR RAIL TUBE ATTACHMENT SHALL BE FIELD–DRILLED. HOLES SHALL BE COATED WITH AND APPROVED ZINC–RICH PAINT DURING INSTALLATION.

7. RAIL POST ANCHORING NUTS SHALL BE TIGHTENED TO A SNUG FIT AND GIVEN AN ADDITIONAL ONE–EIGHTH TURN.

8. RAIL TUBES SHALL BE ATTACHED USING 3/4" FULL DIAMETER BODY ASTM A449 ROUND HEAD BOLTS INSERTED THROUGH THE FACE OF THE TUBE. HOLES IN POSTS SHALL BE 1/16" LARGER THAN THE BOLT SIZE.

9. ANY BENDING OR CURVING OF RAIL SHALL BE DONE IN A FABRICATION PLANT IN ACCORDANCE WITH SUBMITTED PROCEDURES.

10. THE MINIMUM DISTANCE FROM A POST TO AN EXPANSION JOINT SHALL BE SUCH TO MAINTAIN MINIMUM EDGE DISTANCE OF 5" FROM ANY ANCHOR STUD TO THE END OF THE SLAB, OR TO THE EXPANSION JOINT RECESS POUR, IF ONE IS USED.

11. A DELINEATOR (SEE VAOT STANDARD DRAWING G–1 FOR DETAILS) SHALL BE INSTALLED AT NEAREST POST TO 30 FT SPACING. WHITE IS TO BE INSTALLED ON THE DRIVER'S RIGHT. FOR ONE WAY BRIDGES, YELLOW IS TO BE INSTALLED ON THE DRIVER'S LEFT. PAYMENT SHALL BE INCIDENTAL TO OTHER ITEMS.

12. THIS RAILING MEETS THE REQURIEMENTS FOR A TL–4 SERVICE LEVEL.

MATERIALS

RAIL TUBES.....ASTM A500 GRADE B OR ASTM A501
RAIL POSTS AND BASE PLATES.....ASTM A709/A709M, GRADE 50
ALL OTHER SHAPES AND PLATES.....ASTM A709/A709M, GARDE 36
ANCHOR STUDS.....ASTM A449
ALL OTHER BOLTS (UNLESS NOTED).....AASHTO M164, TYPE1

NUTS FOR AASHTO M164 BOLTS AND FOR ANCHOR STUDS SHALL COMPLY WITH AASTHO M291 (ASTM A563).

WASHERS SHALL COMPLY WITH AASHTO M293 (ASTM F436) SPECIFCATIONS.

1/8" PAD SHALL COMPLY WITH STANDARD SPECIFICATION SUBSECTION 731.01 OR 731.02.

RAIL POSTS AND BASE PLATES SHALL BE TESTED FOR IMPACT PROPERTIES IN ACCORDANCE WITH ASTM A370 CHARPY IMPACT TESTING USING TYPE A SPECIMEN.

Vermont Agency of Transportation
RECEIVED
ON: March 25, 2015
and Checked for
CONFORMANCE
BY: TY Lin DATE: 03/30/15

T.Y. LIN INTERNATIONAL

THE STAMPED DOCUMENTS ARE HEREBY:

____ APPROVED
X APPROVED AS NOTED
____ REVISE AND RESUBMIT

SEE TRANSMITTAL FOR ADDITIONAL INFORMATION AS APPLICABLE.

THIS REVIEW IS FOR GENERAL CONFORMANCE WITH DESIGN CONCEPT ONLY. ANY DEVIATION FROM THE PLANS OR SPECIFICATIONS NOT CLEARLY NOTED BY THE CONTRACTOR HAS NOT BEEN REVIEWED. REVIEW BY THE ENGINEER SHALL NOT RELIEVE THE CONTRACTOR OF THE CONTRACTUAL RESPONSIBILITY FOR ANY ERRORS OR DEVIATION FROM THE CONTRACT REQUIREMENTS.

RICK HEBERT — REVIEWER
3/30/2015 — DATE

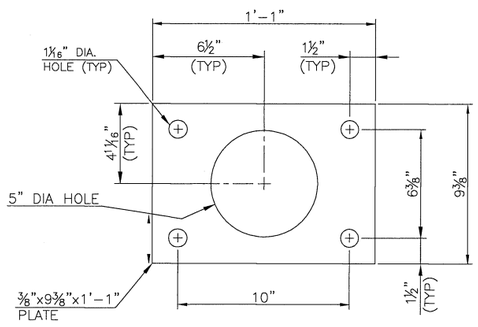

ANCHOR PLATE

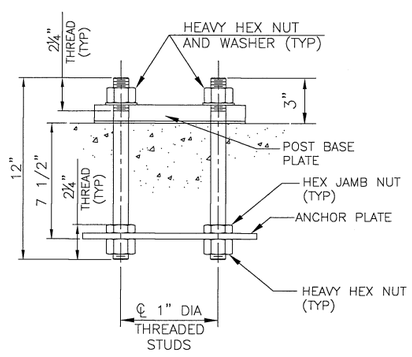

RAIL POST ANCHORAGE

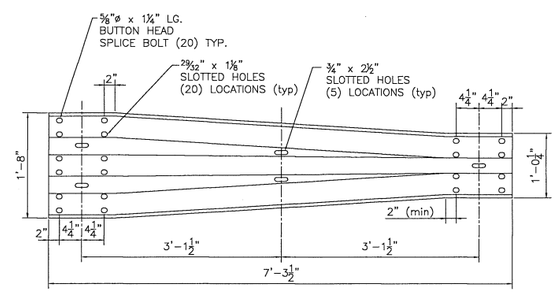

THRIE TRANSITION PANEL

10 GAUGE (AASHTO M180 B2)

HIGHWAY SAFETY CORP
GLASTONBURY, CT
860–633–9445

ITEM 525.34 4–BAR BRIDGE RAIL
BRIDGE IMPROVEMENT
BENMONT AVE. OVER ROARING BRANCH RIVER
B.I.N. 57 P.I.N. BRF 1000 (16)
TOWN OF BENNINGTON, BENNINGTON COUNTY

AISC CERTIFIED FABRICATOR

HSC JOB NO. 2026

GENERAL CONTRACTOR

SUB CONTRACTOR: LAFAYETTE

SHEET NO. 6 of 6

DRAWN	CHECKED	DATE	SCALE	SIZE
MKT		2–17–15	NONE	D