Alpine Construction, LLC

Lift Plan – Phase II Structural Steel

Bennington BRF 1000 (16)

Prepared by

Alpine Construction, LLC

10 Broad Street

Schuylerville, NY 12871

(518) 695-6739

wpatenaude@alpineconstruction.biz

For

Vermont Agency of Transportation

March 3, 2016

Revised March 18, 2016

TABLE OF CONTENTS

Item	Description	# of Pages	Page
1.	LIFT PLAN DRAWING PLAN LPD-VAOT-BEN-01 R0 Phase II	2	3-4
2.	LIFT PLAN DRAWING RIGGING ASSEMBLY LPD-VAOT-BEN-03 R0 Phase II	2	5-6
3.	LIFT PLAN DRAWING RIGGING ASSEMBLY LPD-VAOT-BEN-04 R0 Phase II	2	7-8
4.	STRUCTURAL STEEL INSTALLATION SEQUENCE/ PROCEDURE	3	9-11
5.	LIFT PLAN SUMMARY LPS-VAOT-BEN-01 R0 Phase II	7	12-18
6.	JOB SAFETY ANALYSIS JSA-VAOT-BEN-01 R0	5	19-23
7.	LOAD CHARTS LINK BELT LS138	15	24-38
8.	LOAD CHARTS GROVE RT650E	18	39-56
9.	MANAGEMENT OF LIFT PLAN FIELD CHANGE	3	57-59

STATE OF VERMONT
KYLE F. SWIERSKI
NO. 9059
Structural I
LICENSED
PROFESSIONAL ENGINEER

Lift Plan Drawing

LPD-VAOT-BEN-01 PH-II R0

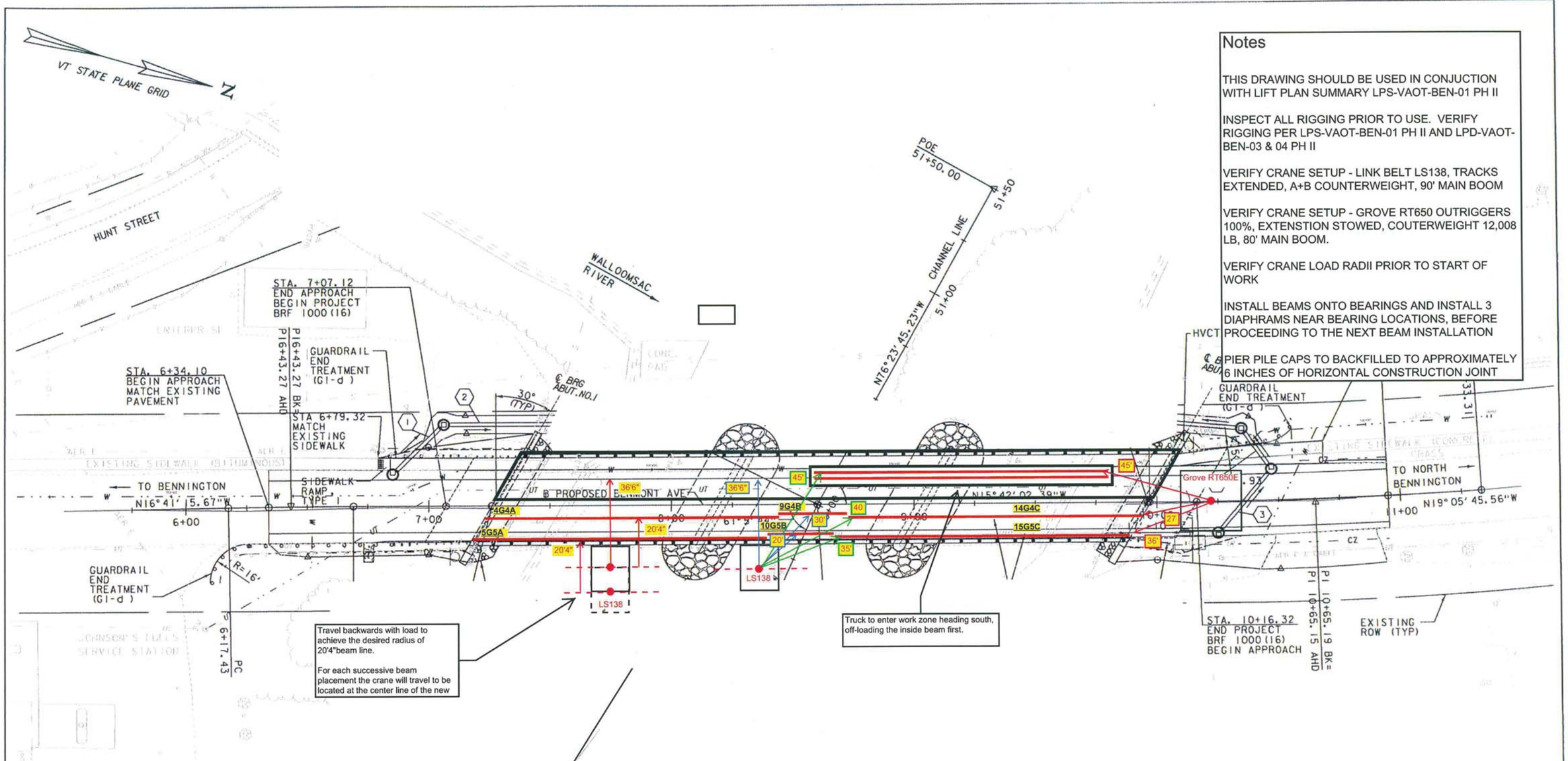

Notes

THIS DRAWING SHOULD BE USED IN CONJUCTION WITH LIFT PLAN SUMMARY LPS-VAOT-BEN-01 PH II

INSPECT ALL RIGGING PRIOR TO USE. VERIFY RIGGING PER LPS-VAOT-BEN-01 PH II AND LPD-VAOT-BEN-03 & 04 PH II

VERIFY CRANE SETUP - LINK BELT LS138, TRACKS EXTENDED, A+B COUNTERWEIGHT, 90' MAIN BOOM

VERIFY CRANE SETUP - GROVE RT650 OUTRIGGERS 100%, EXTENSTION STOWED, COUTERWEIGHT 12,008 LB, 80' MAIN BOOM.

VERIFY CRANE LOAD RADII PRIOR TO START OF WORK

INSTALL BEAMS ONTO BEARINGS AND INSTALL 3 DIAPHRAMS NEAR BEARING LOCATIONS, BEFORE PROCEEDING TO THE NEXT BEAM INSTALLATION

PIER PILE CAPS TO BACKFILLED TO APPROXIMATELY 6 INCHES OF HORIZONTAL CONSTRUCTION JOINT

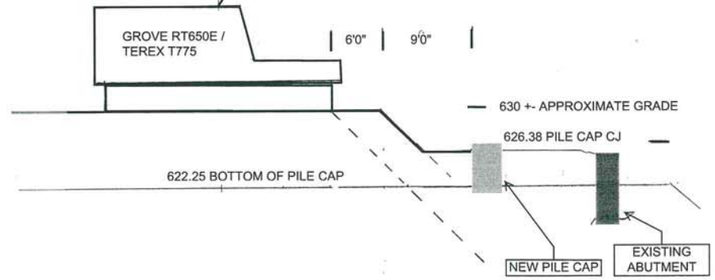

EXISTING BRIDGE INFORMATION

BUILT 1938
NON-CONTINUOUS, STEEL BEAM, CONCRETE DECK
3 SPANS @ 84' , 84' AND 84'
SIDEWALK ON WEST SIDE
35'-6" ROADWAY (CURB TO CURB)
CONCRETE POSTS AND STEEL RAILING

DATUM	
VERTICAL	NAVD 88
HORIZONTAL	NAD 83 (92)
ADJUSTMENT	COMPASS

SCALE 1" = 20'-0"
20 0 20

ALPINE CONSTRUCTION, LLC
BENNINGTON BRF 1000 (16)

BEAMS 4G4A,5G5A,9G4B, 10G5B,14G4C,15G5C
PLAN VIEW -
LINK BELT LS 138, GROVE RT650E
LPD-VAOT-BEN-01 SHT1 PHASE II
REV 0

Lift Plan Drawing

LPD-VAOT-BEN-03 PH-II R0

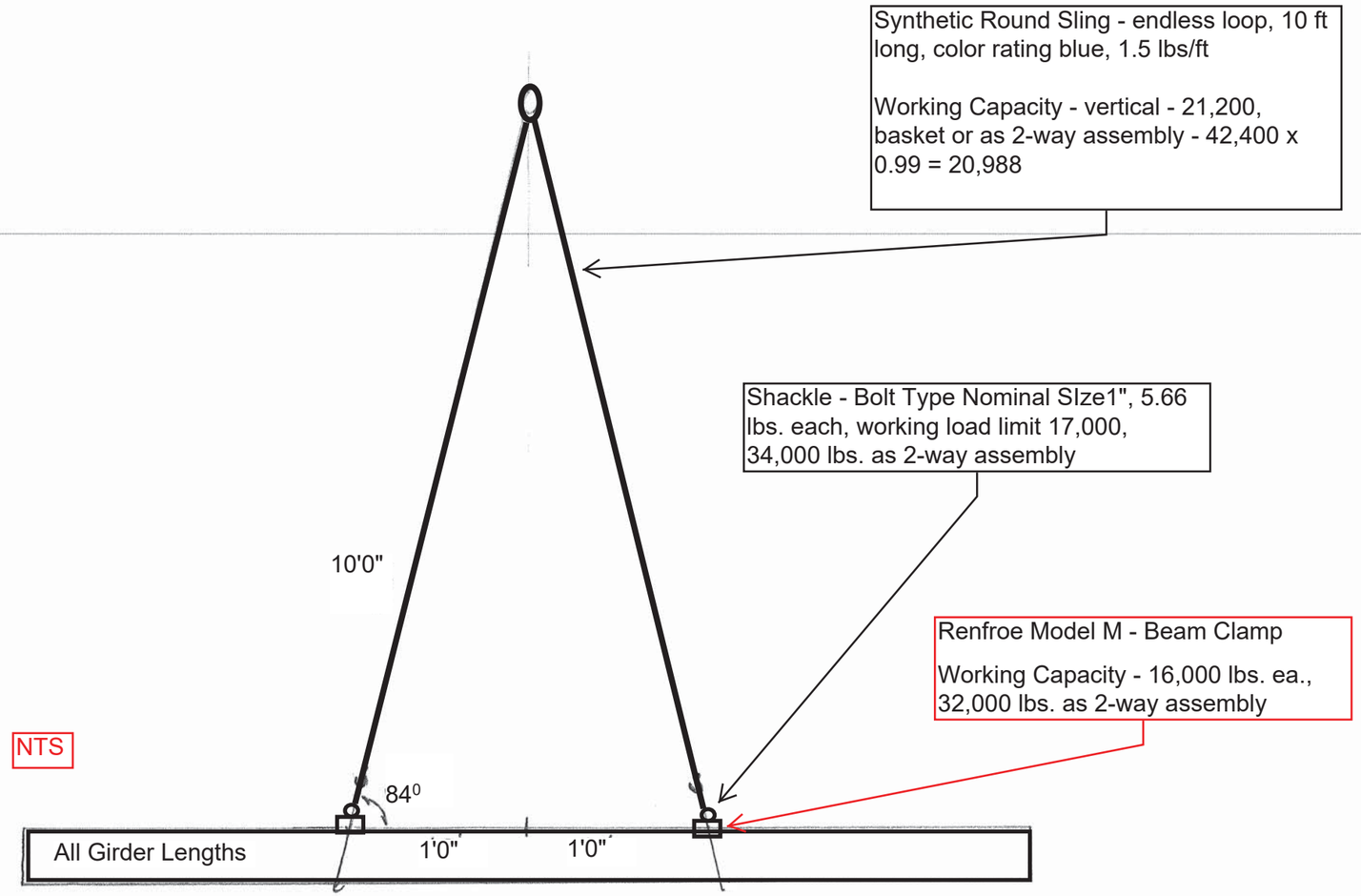

ALPINE CONSTRUCTION, LLC
BENNINGTON BRF 1000 (16)

Primary Plan - Girders 4G4A, 5G5A, 9G4B,10G5B
Rigging Assembly
LPD-VAOT-BEN-03 PH II
REV 0

Lift Plan Drawing

LPD-VAOT-BEN-04 PH-II R0

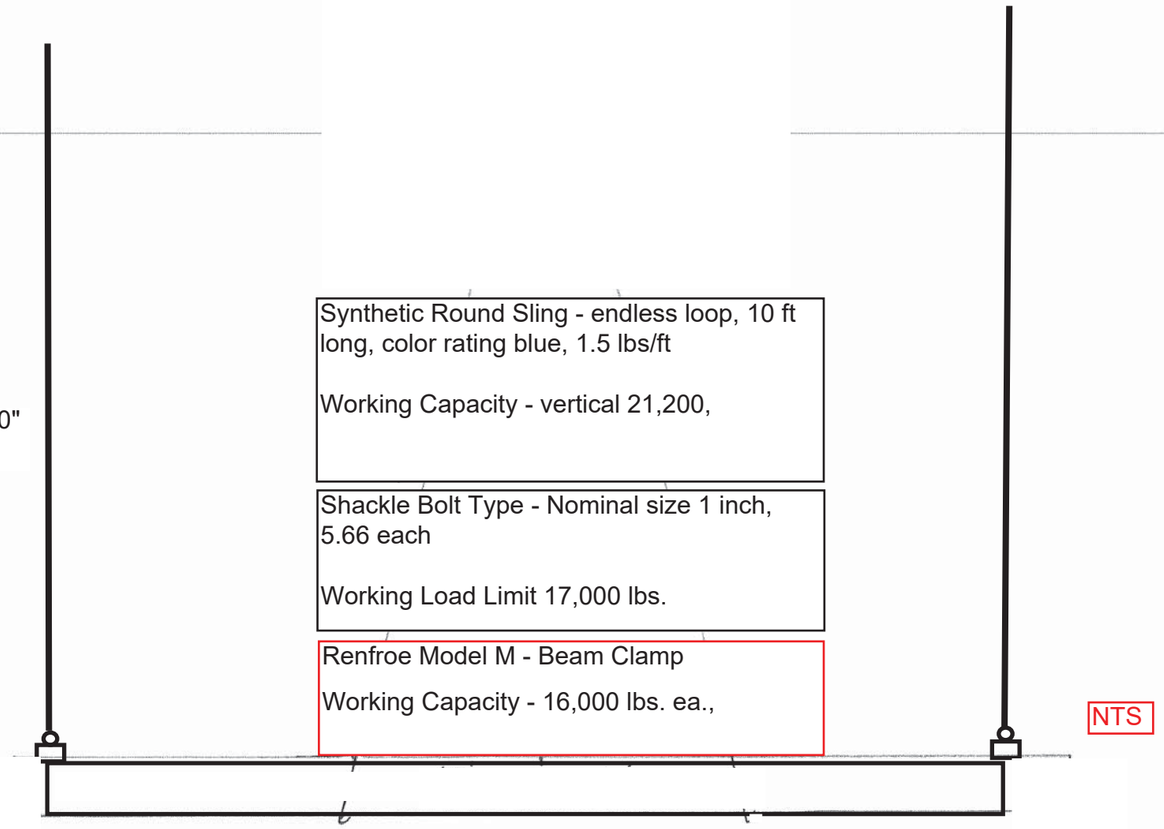

ALPINE CONSTRUCTION, LLC
BENNINGTON BRF 1000 (16)

Primary Plan - Girders 14G4C,15G5C
Rigging Assembly
LPD-VAOT-BEN-04 PH II
REV 0

Structural Steel Installation Sequence / Procedure

Bennington BRF 1000(16)

Structural Steel Installation Procedure / Construction Sequence – Phase II

The girders and diaphragms will be installed with one crane or 2 cranes in the alternate installation

1. Install a minimum of 2 diaphragms for Girder 14G4C and 4G4A, connecting to existing bridge structure, Girder 3. **Note that connection plates for Type B diaphragms between Girder 3 and Girder 4 shall have oversized bolt holes.**
2. Unload Girder 14G4C and install on bearings at pier and abutment.
3. Bolt up a least three diaphragms to the girder, one each at the pile cap, pier and end of girder installing 100% of the bolts brought to snug tight.
4. Install a minimum of 3 diaphragms between girders 14G4C and 15G5C, on girder 14G4C.
5. Unload Girder 15G5C and install on bearings at pier and abutment.
6. Bolt up at least three diaphragms to the girder, one each at the pile cap, pier and end of girder installing 100% of the bolts brought to snug tight.
7. Unload Girder 4G4A and install on bearings at pier and abutment.
8. Bolt up at least three diaphragms to the girder one each at the pile cap, pier and end of girder installing 100% of the bolts brought to snug tight.
9. Install a minimum of 3 diaphragms between girders 4G4A and 5G5A, on girder 4G4A.
10. Unload Girder 5G5A and install on bearings at pier and abutment.
11. Bolt up at least three diaphragms to girder, one each at the pile cap, pier and end of girder installing 100% of the bolts brought to snug tight.
12. Span two Girders approximately 28’ long will come with splice plates attached partially bolted.
13. Unload Girder 9G4B and install, hold with crane till 100% of the bolts in splice plates have been snug tight.
14. Unload Girder 10G5B and install, hold with crane till 100% of the bolts in splice plates have been snug tight.
15. Connect remaining diaphragms installing 100% of the bolts brought to snug tight.

16. All bolts shall be tightening to their proper tension, EXCEPT connection plates for Type B diaphragms between girder 3 and girder 4 shall have oversized bolt holes. Bolts for that diaphragm shall not be tightened until after the phase II deck concrete has been poured.

STATE OF VERMONT
KYLE F. SWIERSKI
NO. 9059
Structural I
LICENSED
PROFESSIONAL ENGINEER

Lift Plan Summary

LPS-VAOT-BEN-01 PH-II R0

Alpine Construction, LLC

Lift Plan Summary

Bennington BRF 1000 (16)

Structural Steel Assembly

Project Site	Bennington BRF 1000 (16)
Location	Benmont Avenue, Bennington VT
Lift Plan Title	Structural Steel Assembly
Lift Plan Summary No.	VAOT-BEN-LPS-01 Phase II Primary Installation Plan
Lift Location	Bennington, Vermont
Lift Type	☐ Routine ☐ Non-routine X Critical ☐ Engineered

Reference Documents

Lift Drawings	LPD-VAOT-BEN-01 Phase II, LPD-VAOT-BEN-03 PH II, LPD-VAOT-BEN-04 PH II
JSA	JSA-VAOT-BEN-01 R0
Sling Inspection Log	Visually inspect all rigging prior to use
Crane Outrigger Load Data	Calculated using Grove Compu-Crane program and included below as the maximum load at each outrigger for 360 rotation

A. DETERMINING FACTOR FOR CRITICAL LIFT

X	The use of 75-100% of the rated capacity of a fixed or mobile crane, or
X	The use of 2 or more cranes to perform the lift, or
	Involves lifting of loads (with a ratio of less than 1 ton per square meter exposed to the wind) that may sail in outdoor conditions, or
	Personnel lifts, or
	Complex lifts at the discretion of the Competent Person or Operator (Example might include; Lifting hazardous materials, Lifting materials that could create an environmental impact, lifting over critical equipment, etc.).

CRANE EQUIPMENT

Type of Crane	Lattice Boom Crawler Crane	Manufacturer	Link Belt
Model Number	LS138	Serial Number	B5K17-7888
Capacity	75 Ton	Latest Annual Inspection	
Operator Licensed	Dave Laflin	License Expiration	3/28/18
	John Conley	License Expiration	9/30/19
Manufacturers Restriction for Wind Speed		20.00 mph – reduce operation 30.00 mph – do not operate	
A. Utilize National Weather Service to advise of approaching wind, rain, or lighting B. No lifts are permitted when wind speed is in excess of 30 mph			

Type of Crane	Hydraulic Rough Terrain	Manufacturer	Grove
Model Number	RT650E	Serial Number	225964
Capacity	50 Ton	Latest Annual Inspection	
Operator Licensed	Dave Laflin	License Expiration	3/28/18
	John Conley	License Expiration	9/30/19
Manufacturers Restriction for Wind Speed		20.00 mph – reduce operation 30.00 mph – do not operate	
C. Utilize National Weather Service to advise of approaching wind, rain, or lighting D. No lifts are permitted when wind speed is in excess of 30 mph			

B. DESCRIPTION OF ITEMS TO BE LIFTED

DESCRIPTION OF ITEM TO BE LIFTED

Structural Steel Components

DESCRIPTION & WEIGHT OF ALL RIGGING EQUIPMENT & CRANE ATTACHMENTS

Slings (Synthetic & Wire Rope)	Capacity (lbs.)	Crane Load Link Belt LS138	Crane Load Link Belt LS138	Crane Load Grove Rt650E
		Weight (lbs.)	Weight (lbs.)	Weight (lbs.)
2 – Synthetic Round Sling, Endless Loop 10 ft. length Color Rating: Blue, 1.5 lbs./ft.	Vertical 21,200 EA 42,400 Total	30	15	15
2 - Beam Clamp – Renfroe Model M, 105 lbs. each, working load limit 16,000	16,000 EA 32,000 Total	210	105	105
Shackles – Bolt Type Nominal Size 1”, 5.66 lbs. each, working load limit 17,000	17,000 EA 34,000 Total	11.32	5.66	5.66
Total Weight of Rigging		251	126	126
Crane Adjustments	Capacity (ton)	Weight (lbs.)	Weight (lbs.)	Weight (lbs.)
Grove Attachments				
Auxiliary Boom Nose				137
Main Block – R0053 – 551 lbs.	44,000			Not in Use
Extra Wire Rope Main Block – ¾ inch 1.5 lbs./ft.				Not in Use
Auxiliary Block - 06-8696 – 370 lbs.	16,800			370
Extra Wire Rope Auxiliary Block - ¾ inch 1.5 lbs./ft.				0
Link Belt Attachments				
Main Block – R0012 -805 lbs.	64,000	805	805	
Extra Wire Rope Main Block – 7/8 inch 1.5 lbs./ft.		0 / 127	127	
Auxiliary Block – 500 lbs	22,400	Not in Use	Not in Use	

Extra Wire Rope Auxiliary Block -7/8 inch 1.5 lbs/ft		Not in Use	Not in Use	
Total Crane Adjustment		**805**	**932**	**507**
Total Rigging & Crane Adjustments		**1056 / 1183**	**1058**	**633**

* Must comply with ASME B30.20 Standard for Design, Testing, and Appropriate Markings.

WEIGHT OF OBJECT, RIGGING

Grove RT650E

Item Description		Weight Source	Girder Weight	Weight Source	Splice Plates	Rigging & Crane	Crane Load
A.	Girder – 14G4C	CASCO Drawing Sht. 14B	23,225 11,612 (½)			633	12,245
B.	Girder – 15G5C	CASC) Drawing Sht. 15B	23,052 11,526 (½)			633	12,159

Link Belt LS138

Item Description		Weight Source	Girder Weight	Weight Source	Splice Plates	Rigging & Crane	Crane Load
C.	Girder – 4G4A	CASCO Drawing Sht. 4B	23,224			1056	24,280
D.	Girder – 5G5A	CASCO Drawing Sht. 5B	23,051			1056	24,107
E.	Girder – 9G4B	CASCO Drawing Sht. 9	5,196	CASCO Drawing Sht. X1	1,321	1183	7,700
F.	Girder – 10G5B	CASCO Drawing Sht. 10	5,170	CASCO Drawing Sht. X1	1,321	1183	7.674
G.	Girder – 14G4C	CASCO Drawing Sht. 14B	23,225 11,612 (½)			1058	12,670
H.	Girder – 15G5C	CASC) Drawing Sht. 15B	23,052 11,526 (½)			1058	12,584

Alpine Construction, LLC
Lift Plan Summary
C. EQUIPMENT AND LIFT RELATIONSHIP

Bennington BRF 1000 (16)
Structural Steel Assembly

	Crane	Link Belt LS138						Grove RT650E	
	Crane Configuration	Lattice Boom Crawler Crane, Outriggers Extended, A+B Counter Weights, 90' Main Boom						Hydraulic Telescopic Boom Crane, Outriggers 100% Extension Counterweight 12,008 lbs., 80' Main Boom	
	Placement Location	ABUTMENT 1 TO PIER 1		Center Girder		ABUTMENT 2 TO PIER 2		ABUTMENT 2 TO PIER 2	
	Girder Identifier	4G4A	5G5A	9G4B	10G5B	14G4C	15G5C	14G4C	15G5C
A.	Rated Load	24,280	24,107	7,700	7,674	12,670	12,584	12,245	12,159
B.	Maximum Operating Radius @ Rated Load	40'	40'	70'	70'	60'	60'	50'	50'
C.	Planned Operating Radius – Off Truck	36'6"	36'6"	36'6"	36'6"	45'	45'	45'	45'
D.	Allowable Load at Radius - Off Truck	26,900	26,900	26,900	26,900	19,900	19,900	17,300	17,300
E.	Ratio of Lift to Allowable Load	90.2%	89.6%	28.6%	28.5%	63.6%	63.2%	70.7%	70.2%
F.	Planned Operating Radius – Set in Place	20'	20'	30'	20'	40'	35'	27'	36'
G.	Allowable Load at Radius - Set in Place	72,200	72,200	39,900	72,200	26,900	32,200	29,850	21,350
H.	Ratio of Lift to Allowable Load	33.6%	33.3%	19.3%	10.6%	47.1%	39.0%	41.0%	56.9%
I.	Rigging Configuration	2-way	2-way	2-way	2-way	Vertical	Vertical	Vertical	Vertical
	Sling Angle (Manufacturer Min Sling Angle - 45 ^{O})	84°	84°	84°	84°	---	---	---	---
J.	Rigging Capacity as Configured	32,000	32,000	32,000	32,000	16,000	16,000	16,000	16,000
K.	Clearance between Boom & Lift:	Ok	Ok	Ok	Ok	Ok	Ok	Ok	Ok
L.	Clearance to Surrounding Facilities/Utilities: Water Line Located Downstream Encased in Concrete	Ok	Ok	Ok	Ok	Ok	Ok	Ok	Ok
M.	Clear Path for Load Movement	Ok	Ok	Ok	Ok	Ok	Ok	Ok	Ok

D. CRANE PAD LOADING – MAXIMUM AT 360 DEGREES

Crane	Outrigger Location	Load
Grove RT650E	Forward-Left	31,053
	Forward-Right	28,673
	Aft-Left	29,830
	Aft-Right	31,960

E. STABILITY OF GROUND AREA

A.	Soil Bearing Capacity – Presumptive Based on Building Code				3000 psf
Soil Bearing Pressure Analysis					
B.	Crane	Crane Mats	Max Pad Loading (lbs.)	Bearing Pressure (lbs./sf)	Ratio of Bearing Pressure
	Grove RT650E	4 x 4 x 1	31,960	1,997	1.50
C.	Underground Utilities Location		Located, not in area of crane setup, to be confirmed with site controlling entity		

F. LIFTING OPERATION

Reference Lift Plan Drawing LPD-VAOT-BEN-01 Phase II, LPD-VAOT-BEN-03 PH II, LPD-VAOT-BEN-04 PH II

G. LIFT APPROVAL SIGNATURES

Entity	Name	Signature
Professional Engineer:	Not Required	
Crane Operator:	JOHN CONLEY	
Crane Operator (Alternative):	DAVE LAFLIN	
	Date	

Job Safety Analysis

JSA-VAOT-BEN-01 R0

Crane Mobilization & Operation

Job Safety Analysis (JSA)

Activity/Work Task:	Crane Mobilization & Operation	Overall Risk Assessment Code (RAC) (Use highest code)	L
Project Location:	**Benmont Ave, Bennington VT**	Risk Assessment Code (RAC) Matrix	
JSA Number:	JSA-VAOT-BEN-01 R0		
Date Prepared: (mm/dd/yy)	Rev 0 04/18/2015		
Prepared by (Name):	John Conley		
Reviewed by (Name):	William Patenaude		

Severity	Probability				
	Frequent	Likely	Occasional	Seldom	Unlikely
Catastrophic	E	E	H	H	M
Critical	E	H	H	M	L
Marginal	H	M	M	L	L
Negligible	M	L	L	L	L

Notes: (Field Notes, Review Comments, etc.)

References :

Step 1: Review each "Hazard" with identified safety "Controls" and determine RAC (See above).
The RAC is developed after correctly identifying all the hazards and fully implementing all controls.

P "Probability" is the likelihood to cause an incident, near miss, or accident and identified as: Frequent, Likely, Occasional, Seldom or Unlikely.

S "Severity" is the outcome/degree if an incident, near miss, or accident did occur and identified as: Catastrophic, Critical, Marginal, or Negligible

Step 2: Identify the RAC (Probability/Severity) as E, H, M, or L for each "Hazard" on AHA. Annotate the overall highest RAC at the top of AHA.

RAC Chart
E = Extremely High Risk
H = High Risk
M = Moderate Risk
L = Low Risk

HAZARD ANALYSIS

Item	Work Activity	Potential Hazards	Hazard Controls	P	S	RAC
1.	**Crane Set-Up**	Ground Stability, overhead power line, changed site conditions	Conduct site reconnaissance with particular attention to: • Inspect ground area prior to and after extension and loading of outrigger to ensure competent footing. • Assume electrical lines are energized, install signage, if necessary, to warn of potential electrocution hazard. For lines rated 50 kv or below, minimum clearance between the lines and any part of the crane or load shall be 10 feet. • Identify non-Alpine workers and/or operations.	N	S	L
		Weather Conditions	• Monitor lighting detection system, if electrical storm is within a 30 minutes or 30 mile radius suspend crane operations. • Monitor wind conditions reducing or suspending operations as conditions warrant.	N	S	L
		Muscle strain / heavy lifting	• Crane setup personnel will use proper lifting techniques – lift with legs, straight back, do not twist while lifting heavy loads, when handling loads or rigging.	N	S	L
		Cut or laceration	• Crane setup personnel will utilize puncture resistant leather gloves.	N	S	L
		Slips, trips and falls	• Maintain good housekeeping in the work zone. Store tools and supplies neatly away from work area.	N	S	L
2.	**Crane Operation**	Crane collapse, crane overturning	• Crane operator shall be licensed (COO) and is designated as the competent person for the crane that they operate. • The crane shall have a current annual inspection and a placard indicating date of inspection will be affixed to the crane. • Crane will always be operated within the cranes specific operating capabilities. • Confirm the setup location is consistent with Lift Plan Summary and Drawings. • Identify critical loads contemplated during the entry. Confirm setup location allows for these alternative lifts.	M	S	L

			• Inspect ground area prior to and after extension and loading of outrigger to ensure competent footing. • Prior to daily use the competent person will inspect the crane, outriggers, crane footing and file daily crane inspection log. • Whenever there is any doubt as to safety, the operator shall have the authority to stop and refuse to handle the load until safety has been assured. • Utilize Lift Plan			
		Struck by/against crane, man basket and load	• Establish an exclusion zone around the operating range of the crane (rotational movement) with yellow safety tape. • Do not stand under load. Observe crane load movement from sidelines.	N	S	L
		Mis-communications by signal person	• Crane signal person shall be trained. • Voice signals must contain the following three elements, given in the following order: function (such as hoist, boom, etc.), direction; distance and/or speed; function, stop command. • Utilize radio communications with the crane operator when signal person when is not in direct line of sight.	M	S	L
		Load drop, rigging equipment failure, poor rigging procedures, load control	• Riggers shall be trained • Rigging equipment for material handling shall be inspected prior to use on each shift and as necessary during its use to ensure that it is safe. Defective rigging equipment shall be removed from service. • Rigging equipment shall not be loaded in excess of its recommended safe working load. • Tag lines shall be used unless their use creates an unsafe condition.	M	S	L
		Rigger cut or laceration	• Crane rigger will utilize puncture resistant leather gloves when handling loads, rigging or crane cable/hook.	N	S	L
		Muscle strain / heavy lifting	• Crane rigger will use proper lifting techniques – lift with legs, straight back, do not twist while lifting heavy loads when handling loads or rigging.	N	S	L

All employees are required to familiarize themselves with the contents of this JSA before starting the work activity.

Print	Signature	Affiliation/Company

ALL INCIDENTS MUST BE REPORTED IMMEDIATELY

You May Not Leave at the End of Your Shift if You Have an Unreported Incident

Employee in Charge of Briefing: _____

Sign: _____

Date: _____

Load Charts

Link Belt LS138

Link-Belt
CONSTRUCTION EQUIPMENT

Specifications

Hydraulic Lattice Boom Crawler Crane

LS-138H

75-Ton *(68 metric ton)*

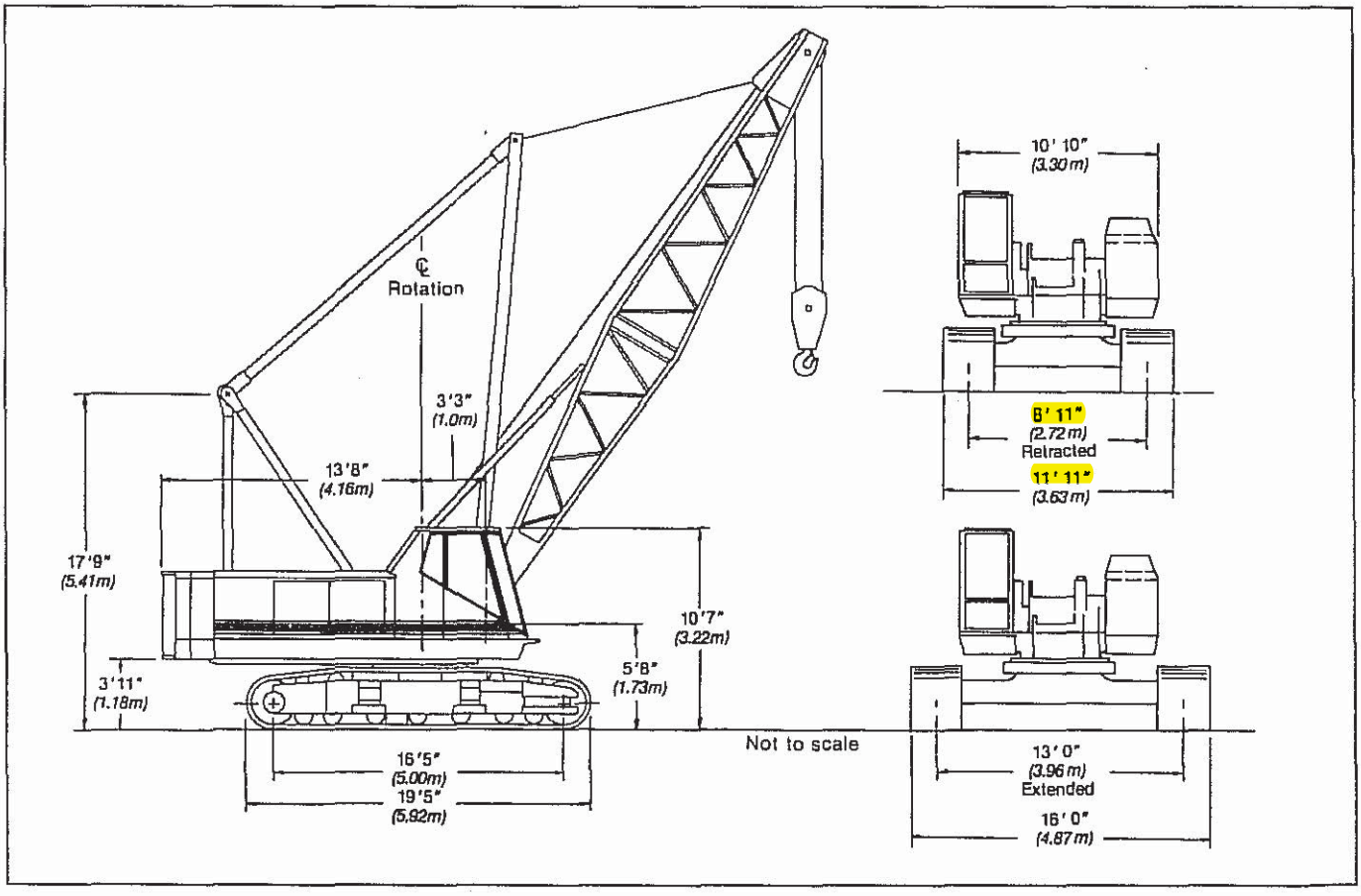

General dimensions	Feet	meters
Basic boom length	40' 0"	12.20
Overall width side frames extended —36" (0.91 m) track shoes	16' 0"	4.87
Overall width side frames retracted —36" (0.91 m) track shoes	11' 11"	3.63
Overall width side frames removed (axles in-line with truck – catwalks folded)	10' 10"	3.30
Minimum ground clearance	16"	0.40

General dimensions	Feet	meters
Ground clearance – ctwt. "A"	3' 11"	1.19
Ground clearance – ctwt. "AB"	3' 11"	1.19
Overall width of counterweight	10' 2"	3.09
Tailswing of counterweight "A"	13' 6"	4.10
Tailswing of counterweight "AB"	13' 8"	4.16
Overall width of upper (catwalks folded)	10' 10"	3.30
Overall height for transport, gantry lowered	11' 2"	3.40

Machine working weights – approximate

Complete basic machine with Isuzu 6SA1T diesel engine, turntable bearing, hydraulic independent swing and travel, main operating drums and boomhoist, 40' (12.19 m) tubular boom w/live mast, no bucket or hook block but with 900' (274.3 m) of 7/8" (22.2 mm) dia. hoist rope.	Track shoes 36" (0.91 m) pounds
With 39,750 lb. (18 031 kg) counterweight "AB"	126,900

Ground contact area

Note: Determining ground bearing pressure – divide the total weight of machine as shown above by the respective ground contact area.

Track shoes		Ground contact areas	
inches	meters	in^2	cm^2
36	0.91	15,100	97,420

Weight deductions for transporting – approximate

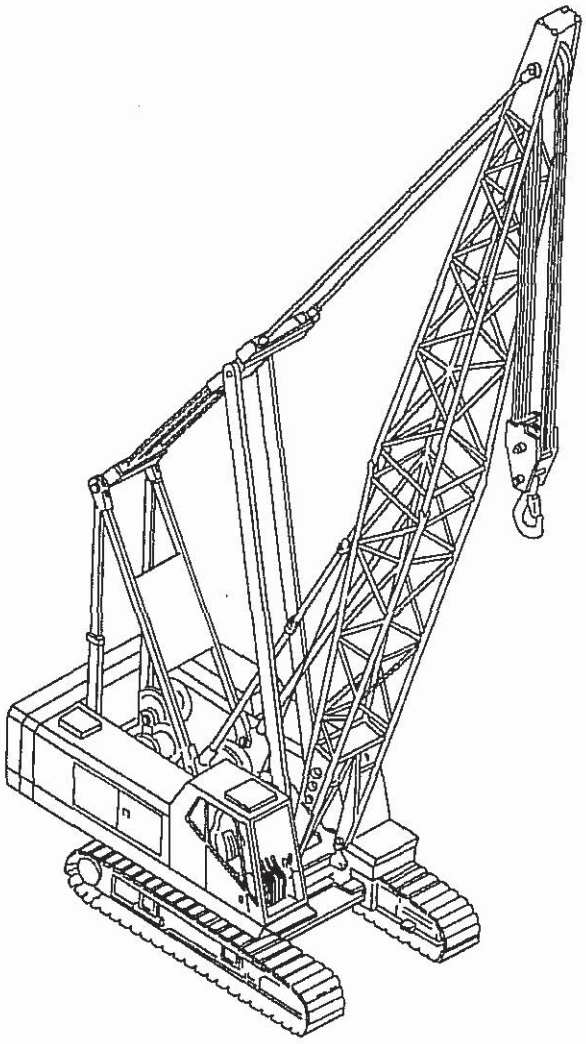

Deduct or add for the following components:	pounds	kilograms
Counterweight "A"	19,600	8 891
Counterweight "AB"	39,750	18 031
Basic 40' (12.19 m) tubular boom:		
Tip: (includes head machinery)	2,630	1 193
Base	1,700	771
Boom pendants - basic	250	113
Bridle and spreader bar	765	347
Boomhoist rope - 645' (196.6 m)	465	211
Hoist rope - 900' (274 m) of 7/8" (22 mm) dia.	1,280	581
Live mast	1,550	703
10' (3.05 m) extension and pendants	650	295
20' (6.10 m) extension and pendants	1,055	479
30' (9.14 m) extension and pendants	1,450	658
Side frames:		
36" (.91 m) track shoes	36,220	16 429
Lower carbody	10,890	4 940
Catwalks	340	154
Backstops	500	227
Fairlead	500	227

LS-138H Performance Specifications

Wire rope and rope drum data

Main load hoist wire rope length – using 7/8" (22 mm) diameter wire rope

Parts of line	Boom lengths													
	40' (12.19 m)		50' (15.24 m)		60' (18.29 m)		70' (21.34 m)		80' (24.38 m)		90' (27.43 m)		100' (30.48 m)	
	ft.	meters	ft.	meters	ft.	meters	ft.	meters	ft.	meters	ft.	meters	ft.	meters
1	105	32.00	125	38.10	145	44.20	165	50.29	185	56.39	205	62.48	225	68.58
2	150	45.72	180	54.86	210	64.01	240	73.15	270	82.30	300	91.44	330	100.58
3	195	59.44	235	71.63	275	83.82	315	96.01	355	108.20	395	120.40	435	132.59
4	240	73.15	290	88.39	340	103.63	390	118.87	440	134.11	490	149.35	540	164.59
5	285	86.87	345	105.16	405	123.44	465	141.73	525	160.02	585	178.31	645	196.60
6	330	100.58	400	121.92	470	143.26	540	164.59	610	185.93	680	207.26	750	228.60
7	375	114.30	455	138.68	535	163.07	615	187.45	695	211.84	775	236.22	855	260.60
8	420	128.02	510	155.45	600	182.88	690	210.03	780	237.74	870	265.18	960	292.61
9	465	141.73	565	172.21	665	202.69	765	233.17	865	263.65	965	294.13		
10	510	155.45	620	188.98	730	222.50	840	256.03	950	289.56				

Parts of line	Boom lengths															
	110' (33.53 m)		120' (38.58 m)		130' (39.62 m)		140' (42.67 m)		150' (45.72 m)		160' (48.77 m)		170' (51.82 m)		180' (54.86 m)	
	ft.	meters	ft.	meters	ft.	meters	ft.	meters	ft.	meters	ft.	meters	ft.	meters	ft.	meters
1	245	74.68	265	80.77	285	86.87	305	92.96	325	99.06	345	105.16	365	111.25	385	117.35
2	360	109.73	390	118.87	420	128.02	450	137.16	480	146.30	510	155.45	540	164.59	570	173.74
3	475	144.78	515	156.97	555	169.16	595	181.36	635	193.55	675	205.74	715	217.93	755	230.51
4	590	179.83	640	195.07	690	210.31	740	225.55	790	247.79	840	256.03	890	271.27	940	286.51
5	705	214.88	765	233.17	825	251.46	885	269.75	945	288.04						
6	820	249.94	890	271.27												
7	935	284.99														

Dragline or clamshell wire rope lengths – using one part of line

Attachments	Function	Boom Lengths							
		40' (12.12 m)		50' (15.24 m)		60' (18.29 m)		70' (21.34 m)	
		Feet	meters	Feet	meters	Feet	meters	Feet	meters
Clamshell	Holding	110	33.53	130	39.62	150	45.72	170	51.82
	Closing	160	48.77	180	54.86	200	60.96	220	67.06
Dragline	Hoist	110	33.53	130	39.62	150	45.72	170	51.82
	Inhaul	65	19.81	75	22.86	85	25.90	95	28.96

Drum wire rope capacities:

Wire rope layer	Front or rear drum – 17-5/8" (0.45 m) root diameter grooved lagging, 7/8" (22 mm) wire rope				Front mounted third drum – 12-3/4" (0.32 m) root diameter smooth lagging, 5/8" (16 mm) wire rope				Boomhoist drum – 10-11/16" (0.27 m) root diameter grooved lagging, 5/8" (16 mm) wire rope			
	Rope per layer		Total wire rope		Rope per layer		Total wire rope		Rope per layer		Total wire rope	
	Feet	meters	Feet	meters	Feet	meters	Feet	meters	Feet	meters	Feet	meters
1	101	31.0	101	31.0	77	23.5	77	23.5	46.0	14.0	46.0	14.0
2	109	33.5	211	64.5	84	25.6	161	49.0	50.5	15.4	96.5	29.4
3	118	36.1	330	100.6	91	27.7	252	76.8	54.8	16.7	151.3	46.1
4	126	38.6	456	139.2	99	30.1	351	107.0	59.4	18.1	210.7	64.2
5	134	41.1	591	180.3	106	32.3	457	139.3	63.6	19.4	274.3	83.0
6	143	43.6	734	223.9					68.2	20.8	342.5	104.4
7									72.5	22.1	415.0	126.5
8									77.1	23.5	492.1	150.0
9									86.9	26.5	579.0	176.5

LS-138H Load Hoisting Performance

Available line speed and line pull – based on ISUZU 6SA1T at 2100 rpm full load speed.
Line pulls are not based on wire rope strength. See wire rope chart for maximum permissible single part of line working loads.

Front or Rear Drum: Line speeds and pulls

17-5/8" Root Dia. – 7/8" dia. rope													
Single line pull		First layer speed				Fourth layer speed				Sixth layer speed			
		Low		High		Low		High		Low		High	
lbs	kgs	fpm	m/min	fpm	m/min	fpm	m/min	fpm	m/min	fpm	m/min	fpm	m/min
1,000	454	138	42	276	84	177	54	354	108	203	62	406	124
5,000	2 268	137	41	274	83	175	53	349	106	201	61	391	119
10,000	4 536	136	41	244	74	174	53	284	86	198	60	304	92
15,000	6 804	134	41	204	62	172	52	262	80	196	59	233	71
20,000	9 072	133	40	170	51	170	51	179	54	174	53	174	53
22,700	10 297	132	40	155	47	155	47	155	47	–	–	–	–

Wire rope: size, type and working strength

Wire rope application	Size: diameter		Type	Max. permissible load	
	inches	mm		lbs.	kgs.
Boom hoist	5/8	16	W	11,700	5 307
Main load hoist	7/8	22	N	22,700	10 297
Auxiliary hoist	7/8	22	P	13,000	5 896
Dragline inhaul	7/8	22	M	22,700	10 297
Dragline hoist	7/8	22	N	22,700	10 297
Clamshell Holding (hoist)	7/8	22	N	22,700	10 297
Clamshell closing	7/8	22	N	22,700	10 297
Third drum	5/8	16	N	11,700	5 307
Boom pendants	1-1/4	32	N	53,200	24 100

Third drum: Line speeds and pulls

Rope Layer	12-3/4" Root Dia.			
	fpm	m/min	pounds	kilograms
1	210	64.0	9,200	4 173
2	230	70.1	8,400	3 810
3	250	76.2	7,800	3 538
4	269	82.0	7,200	3 266
5	289	88.1	6,700	3 039

Wire rope: types available

- Type "M" – 6 X 25 (6 X 19 class), filler wire, extra improved plow steel, preformed, independent wire rope center, right lay, lang lay.
- Type "N" – 6 X 25 (6 X 19 class), filler wire, extra improved plow steel, preformed, independent wire rope center, right lay, regular lay.
- Type "W" – 6 X 26 (6 X 19 class), extra improved plow steel, preformed, independent wire rope center, right lay, alternate lay.
- Type "P" – 19 X 7 non-rotating, extra improved plow steel, preformed, wire strand core.

Crawler Lower

Lower frame

All welded, box construction, precision machined; 13' extended, 8' 11" retracted gauge X 19'5" track length.

Turntable bearing

Outer race is bolted to upper frame, inner race with internal ring gear is bolted to lower frame.

Crawler side frames

All welded, precision machined and removable; hydraulically extended or retracted by a cylinder mounted inside the lower frame.

Track drive sprockets and idler wheels

Cast steel, heat treated; sealed for lifetime lubrication.

Track rollers

Ten per side. Tractor type, oil filled for lifetime lubrication.

Track carrier rollers

Three tractor type rollers mounted on top of each crawler side frame. Oil filled for lifetime lubrication.

Tracks

Heat treated, self cleaning, multiple hinged track shoes joined by one piece full floating pins; 50 shoes per side frame. Standard shoes 36" wide.

Track tension adjustment – Track adjusted by hydraulic cylinders at the idler block. Tracks automatically release during excessive tension condition.

Independent travel & Steering

Axial piston motor with reduction gear is located at inner drive end of each crawler side frame. Each track is driven simultaneously or individually for straight-line, gradual turn, or pivot turn. The tracks can be counter-rotated for spin turns.

Brakes – Spring applied, hydraulically released multiple disc brakes are applied automatically when the control lever is in the neutral position.

Two speed travel – high - 1.0 mph (1.7 km/h)
– low - 0.6 mph (1 km/h)

Gradeability – 30%

Revolving Upperstructure

Frame

All-welded, precision machined unit

Fuel tank

76 gallon (290 L) capacity

Power transmission

All functions hydraulically powered allowing positive, precise control, with independent or simultaneous operation of all crane functions.

Engine Specifications	
Isuzu 6SA1T with oil filter, oil cooler, air cleaner, fuel filter, water separator, hour meter, tachometer and electrical shutdown.	
Number of cylinders	6
Bore and stroke – inch	4-17/32 X 5-5/16
– (mm)	(115 X 135)
Piston displacement – (in^3)	513
– (cm^2)	(8413)
Engine rpm at full load speed	2100
Hi-idle rpm	2350
Net engine horsepower at full load speed, (HP)	195 (145 kw)
Peak torque – foot pounds	513
– (joule)	696
Peak torque – rpm	1400
Electrical system	24 volt
Batteries	2 - 12 volt

Hydraulic System

Hydraulic pumps

Two variable displacement piston pumps operating at 4000 PSI powers travel, main drum, auxiliary drum, third drum and boomhoist functions. One fixed displacement gear pump operating at 3000 PSI powers swing and crawler retract functions. One fixed displacement gear pump operating at 1210 PSI powers pilot control system, clutches, brakes and pump controls.

Hydraulic reservoir

78 US gallon (295 L), equipped with sight level gauge.

Relief valves

Each function is equipped with relief valves to protect the circuit from overload or shock.

Brake valves

Travel circuit is provided with brake valves for all terrain travel capability.

Hydraulic filtration

Ten micron, full flow line filter furnished in control circuit. All oil is filtered prior to return to sump tank.

Hydraulic motors

Main, auxiliary and third hoist drums, boom hoist, swing and travel are powered by axial piston motors.

Counterbalance valves

Hoist motors are equipped with counterbalance valves to provide positive load lowering and prevent accidental load drop when hydraulic power is suddenly reduced.

Principal Operating Functions

Control system

Remote controlled hydraulic servo for main drum, auxiliary drum, third drum and travel. Mechanical linkage controls swing. Function speed is proportional to lever movement. Levers are adjustable for operator comfort.

Load hoisting and lowering

Main and auxiliary hoist drums are driven by individual axial piston motors and reduction gearing. Load hoisting or lowering is provided by actuating or reversing a hydraulic motor. Smooth, precise, power load lowering is attained with automatic hydraulic brake. The control lever provides two speeds for hoisting and lowering. Hoisting or lowering speeds are proportional to lever movement.

Freefall – The incorporation of power hydraulic controlled, two shoe clutches allows freefall operation of the main and auxiliary hoist drums for high cycle crane and duty cycle application. Mode selection switch on control panel allows operator to select the most productive operation mode.

Load hoist drums

Main (front) and auxiliary (rear) hoist drums are 17-5/8" root diameter grooved for 7/8" (22.23 mm) wire rope and mounted on anti-friction bearings.

Third operating drum

Pinned to front of main frame. Hydraulic winch type power up and down standard.

Drum clutches

Speed-o-Matic® power hydraulic two-shoe clutches; internal expanding, lined shoes. Clutch spiders are splined to shafts; clutch drums are integral with hoist drums.

Load hoist clutches – Front and rear main drums – clutch drums 20" diameter, 5" face width. Swept area is 314 square inches.

Drum brakes

External contracting band type; operated by foot pedal equipped with a locking latch. Operator may select automatic brake mode (spring applied, hydraulically released), which will apply brakes when the hoist control lever is in the neutral position.

Drum rotation indicators

Standard for front and rear drums. Audible-type indicators.

Drum locking pawl

Standard for front and rear drums; electrically actuated and prevents drum rotation in a lowering direction.

Anti two-block system

Standard: A switch mounted on the boom peak activates a buzzer to warn the operator of a two-block condition and simultaneously disengages hoist function while applying the hoist brakes.

Swing system

Independent, hydraulic swing is driven by an axial piston motor through a gear reduction system.

Swing brake – Spring applied, hydraulically released; controlled by button on swing control lever.

Swing lock – Mechanically controlled, drop pin.

Swing speed – 0 to 2.8 r.p.m.

Boomhoist / lowering system

Independent, hydraulic boomhoist is driven by an axial piston motor through a gear reduction system. Boom hoisting or lowering is performed by actuating or reversing the motor.

Boomhoist drum

Single grooved lagging 10-11/16" root diameter.

Boomhoist drum locking pawl

Electrically operated.

Boomhoist brake

Spring applied, hydraulically released, multiple disc type brake. Brake is automatically applied when control lever is in neutral position.

Boomhoist limiting device – Restricts hoisting boom beyond recommended minimum radius.

Electrical system

24 volt negative ground system, with two 12-volt batteries. Standard lighting system includes: two 70 watt headlights mounted on machine front and one interior cab light.

Operator's cab

Full vision, modular compartment with safety glass panels. The completely independent cab is insulated against noise and vibration. Sliding operator's door, swing up roof window. Standard equipment includes: heater, defroster, windshield wiper, dry chemical fire extinguisher, sun visor, bubble-type level, fuel gauge, tachometer, hydraulic temperature gauge, engine oil pressure gauge, coolant temperature gauge and service monitor system.

Machinery cab

Hinged doors (two on right side, three on left side) for machinery access. Equipped with roof-top access ladder and electric warning horn.

Catwalks

Standard on both sides. Catwalks fold up for reduced travel width.

Gantry

Retractable high gantry is power lowered to reduce height for transport. May also be used for power raising or lowering of counterweight.

Gantry bail

Pinned to retractable high gantry. Six sheaves are provided for 14-part boomhoist wire rope reeving. Sheaves mounted on anti-friction bearings, sealed for lifetime lubrication.

Counterweight

Removable, held in position by bolts. Standard counterweight lowering system consists of retractable high gantry and hydraulic cylinders.

Counterweight "A" – 19,600 lbs. (8 891 kg)

Counterweight "AB" – 39,750 lbs. (18 031 kg)

Booms and Jibs

Booms

Angle – Two piece basic boom 40' (12.19 m) long with open throat top section. Boom 48" (1.22 m) wide, 48" (1.22 m) deep at centerline of connections. Main chord angles are high strength, low alloy steel, 4" x 4" x 3/8" (101.6 mm x 101.6 mm x 9.53 mm).

Boompoint machinery – Four 18" (.46 m) root diameter head sheaves mounted on anti-friction bearings with rope and sheave guards standard for lift crane use. Three sheaves are standard for clamshell use. Dual 22" (.56 m) root diameter head sheaves with roller guards are standard for dragline use.

Tubular – Two piece basic boom 40' (12.19 m) long with open throat top section. Boom 54" (1.37 m) wide, 44" (1.12 m) deep at centerline of connections. Alloy steel, round tubular chords 3" (76 mm) outside diameter.

Boompoint machinery – Five 18" (.46 m) root diameter head sheaves mounted on anti-friction bearings with rope and sheave guards standard. For lift crane use.

Items applicable to both booms:

Base section – 20' (6.10 m) long. Boom feet 2-7/8" (73 mm) thick on 50" (1.27 m) centers. Lifting lugs on top side of base section to attach carrying links for boom assembly.

Boom extensions – Available in 10', 20' and 30' (3.05 m, 6.10 m, and 9.14 m) lengths with appropriate length pendants.

Boom connections – In-line tapered pins.

Boom top section – Open throat, 20' (6.10 m) long.

Angle jib

Angle – Basic two-piece 20' (6.10 m) long; 24" (.61 m) wide and 20" (.51 m) deep at connections. Alloy steel main chord angles, 2-1/2" x 2-1/2" x 5/16" (63 mm x 63 mm x 8 mm).

Base section – 10' (3.05 m) long.

Jib extensions – available in 10' (3.05 m) lengths with appropriate length pendants.

Jib connections – bolted.

Jib tip section – 10' (3.05 m) long, one 15-7/8" (.40 m) root diameter sheave mounted on anti-friction bearings.

Jib mast

10' (3.05 m) high, mounted on jib base section. One deflector sheave mounted on anti-friction bearings, mounted within mast to guide whipline. Two equalizer sheaves mounted on top of mast – one for jib frontstay line, one for jib backstay line.

Jib staylines – Front and rear staylines vary in length depending on degree of jib offset from boom centerline. Backstay lines attached at bottom end of boom top section.

Jib mast stops – Telescoping type.

Tubular jib

Tubular – Basic two-piece 20' (6.10 m) long, 30" (.76 m) wide and 24" (.61 m) deep at connections. Alloy steel tubular chords 1-1/2" (38 mm) outside diameter.

Base section – 10' (3.05 m) long.

Jib extensions – available in 10' (3.05 m) lengths with appropriate length pendants.

Jib connections – in-line, tapered pin connections.

Jib tip section – 10' (3.05 m) long, one 15-1/4" (.39 m) root diameter sheave mounted on anti-friction bearings.

Jib mast

10' (3.05 m) high, mounted on jib base section. Two deflector sheaves mounted within mast to guide whipline; mounted on anti-friction bearings. Two equalizer sheaves mounted on top of mast – one for jib frontstay line, one for jib backstay line.

Jib staylines – Front and rear staylines vary in length depending on degree of jib offset from boom center line: backstay lines attached at bottom end of boom top section.

Jib stops – Telescoping type.

Boom stops

Dual, tubular telescopic type.

Boom live mast

24' (7.32 m) long rectangular structure which supports boomhoist bridle and boom pendants. Boom live mast may be used as a short crane boom for machine assembly or dismantling. Standard with tubular boom; optional for angle boom attachment.

Boomhoist bridle and spreader bar

Serves as connection for boom suspension system. Bridle contains seven 12" (.30 m) root diameter sheaves mounted on anti-friction bearings for 14-part boomhoist wire rope reeving. Auxiliary bail may be attached to bridle and contains two 15-7/8" (.40 m) root diameter bronze bushed sheaves to permit reeving wire rope suspension for use of boom live mast as short boom. Spreader bar provides attachment for boom main pendants.

Deflector rollers

Deflector roller and wear blocks deflect main and auxiliary load hoist wire rope over top side of boom. Roller is mounted on anti-friction bearings. One roller on top section and one wear block per extension is standard.

Auxiliary Equipment

Boom angle indicator

Pendulum type, mounted on operator's side of boom base section.

Load indicator

Optional; electronic load indicator or rated capacity limiter for main or auxiliary hoist lines.

Fairlead

Optional; full revolving type with barrel, sheaves and guide rollers mounted on anti-friction bearings.

Tagline

Optional; Rud-o-Matic® model 1248; double barrel, spring wound, drum-type for angle boom.

Optional; Rud-o-Matic® model 648 for tubular boom.

® Link-Belt is a registered trademark. Copyright 1995. All rights reserved. We are constantly improving our products and therefore reserve the right to change designs and specifications.

Link-Belt CONSTRUCTION EQUIPMENT

LS-138H

PSCA Class 12-268
Refer to notes Page 4

Lifting Crane & Dragline Capacities

Boom – tubular:
54" (1.37 m) wide and 44" (1.12 m) deep with open throat top section; with 24' (7.32 m) live mast.

Jib – tubular: 30" (.76 m) wide and 24" (.61 m) deep.

Mounting – crawler:
extended gauge: 13' 0" (3.96 m)
retracted gauge: 8' 11" (2.72 m)
overall length: 19' 5" (5.92 m)

Counterweights –
Ctwt. "A": 19,592 lbs. (8 887 kg)
Ctwt. "AB": 39,720 lbs. (18 017 kg)

Maximum tubular boom or boom + jib① machine can lift off ground unassisted – without load

	Counterweight "A"		Counterweight "AB"	
	44" X54" tubular boom		44" X54" tubular boom	
	feet	meters	feet	meters
Over End Side frames extended Side frames retracted	150 or 130 + 50 150 or 130 + 50	45.72 or 39.62 + 15.24 45.72 or 39.26 + 15.24	180 or 160 + 50 ②	54.86 or 48.77 + 15.24 ②
Over Sides Side frames extended Side frames retracted	140 or 120 + 40 120 or 100 + 40	42.67 or 36.58 + 12.19 36.58 or 30.48 + 12.19	170 or 150 + 40 ②	51.82 or 45.72 + 12.19 ②

① With boom live mast and 1-1/4" (32 mm) diameter pendants, and hook blocks on ground.

Maximum tubular boom or boom + jib machine can lift off ground unassisted and travel without load with boom horizontal③ – minimum travel speed on firm level supporting surface

	Counterweight "A"		Counterweight "AB"	
	44" X54" tubular boom		44" X54" tubular boom	
	feet	meters	feet	meters
Over End Side frames extended Side frames retracted	120 or 90 + 40 120 or 90 + 40	36.58 or27.43 + 12.19 36.58 or27.43 + 12.19	150 or 120 + 40 ②	45.72 or 36.58 + 12.19 ③
Over Sides Side frames extended Side frames retracted	120 or 90 + 40 100 or 70 + 50	36.58 or 27.43 + 12.19 30.48 or 21.34 + 15.24	150 or 120 + 40 ②	45.72 or 36.58 + 12.19 ③

② With counterweight "AB", machine must not be operated with side frames retracted.
③ Hook blocks carried at boom and jib points. Based on 75 ton (68 mt) three sheave hook block.

Working Areas

Note – These lines determine the limiting position of any load for operation within the working areas indicated.

Caution – This material is for reference only. Operator must refer to in-cab capacity plate to determine allowable machine lifting capacities and operating procedures.

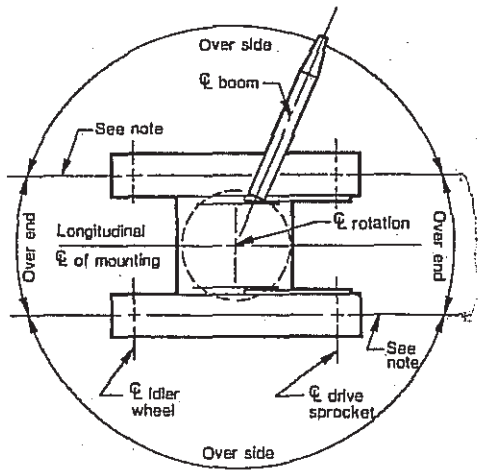

LS-138H Lift Crane Capacities

Boom –tubular:
54" (1.37 m) wide and 44" (1.12 m) deep with open throat top section; with 24'(7.32 m) live mast 1-1/4" (32 mm) diameter boom pendants.

Mounting – crawler
extended gauge: 13' 0" (3.96 m)
retracted: 8' 11" (2.72 m)
overall length: 19' 5" (5.92 m)

Counterweights:
Ctwt. "A": 19,592 lbs. (8 887 kg)
Ctwt. "AB": 39,720 lbs. (18 017 kg)

Length	Boom					Side Frames Extended				Retracted	
	Radius		Angle	Boom Pt.Height⊙		Ctwt. "A"		Ctwt. "AB"		Ctwt. "A"	
	feet	meters	degree	feet	meters	pounds	kilograms	pounds	kilograms	pounds	kilograms
40' (12.19 m)	12	3.66	77.4	44' 8"	20.3	127,200	57 698	150,000*	68 040*	72,600	32 931
	13	3.96	75.9	44' 6"	20.2	107,200	48 626	150,000*	68 040*	63,700	28 894
	14	4.27	74.5	44' 2"	20.1	92,500	41 958	131,000	59 422	56,700	25 719
	15	4.57	73.0	43' 11"	19.9	81,200	36 832	115,200	52 255	51,000	23 134
	20	6.10	65.3	42' 0"	19.1	49,900	22 635	71,300	32 342	33,600	15 241
	25	7.62	57.1	39' 3"	17.8	35,500	16 103	51,100	23 179	24,600	11 159
	30	9.14	48.1	35' 5"	16.1	27,200	12 338	39,500	17 917	19,100	8 664
	35	10.67	37.5	30' 0"	13.6	21,800	9 888	31,900	14 470	15,400	6 985
	40	12.19	23.4	21' 6"	9.8	18,000	8 165	26,600	12 066	12,600	5 715
50' (15.24 m)	12	3.66	80.0	54' 11"	16.7	127,900	58 015	150,000*	68 040*	73,000	21 365
	13	9.96	78.8	54' 8"	16.7	107,800	48 898	150,000*	68 040*	64,100	29 076
	14	4.27	77.6	54' 6"	16.6	93,000	42 185	131,500	59 648	57,100	25 901
	15	4.57	76.4	54' 3"	16.6	81,700	37 059	115,700	52 482	51,300	23 270
	20	6.10	70.5	52' 9"	16.1	50,200	22 771	71,700	32 523	33,800	15 332
	25	7.62	64.3	50' 8"	15.5	35,800	16 239	51,400	23 315	24,800	11 249
	30	9.14	57.7	47' 11"	14.6	27,400	12 429	39,700	18 008	19,200	8 709
	35	10.67	50.6	44' 4"	13.5	22,000	9 979	32,200	14 606	15,500	7 031
	40	12.19	42.7	39' 7"	12.1	18,200	8 256	26,800	12 156	12,800	5 806
	50	15.24	20.9	23' 6"	7.2	13,100	5 942	19,800	8 981	9,200	4 173
60' (18.29 m)	13	9.96	80.7	64' 10"	19.8	108,700	49 306	142,200*	64 502*	64,700	2 9348
	15	4.57	78.7	64' 6"	19.7	82,400	37 377	116,400	52 799	51,800	2 3496
	20	6.10	73.8	63' 3"	19.3	50,700	22 998	72,100	32 705	34,100	1 5468
	25	7.62	68.8	61' 7"	18.8	36,100	16 375	51,700	23 451	25,000	1 1340
	30	9.14	63.6	59' 5"	18.1	27,700	12 565	40,000	18 144	19,400	8 800
	35	10.67	58.1	56' 7"	17.3	22,200	10 070	32,400	14 697	15,700	7 122
	40	12.19	52.3	53' 1"	16.2	18,400	8 346	27,000	12 247	13,000	5 897
	50	15.24	38.9	43' 4"	13.2	13,300	6 033	20,000	9 072	9,300	4 218
	60	18.29	19.0	25' 3"	7.7	10,100	4 581	15,500	7 031	6,900	3 130
70' (21.34 m)	15	4.57	80.4	74' 8"	22.8	82,600	37 467	116,600	52 890	51,900	23 542
	20	6.10	76.2	73' 8"	22.4	50,800	23 043	72,200	32 750	34,100	15 468
	25	7.62	71.9	72' 2"	22.0	36,100	16 375	51,700	23 451	25,000	11 340
	30	9.14	67.6	70' 4"	21.5	27,700	12 565	40,000	18 144	19,400	8 800
	35	10.67	63.1	68' 1"	20.8	22,200	10 070	32,400	14 697	15,700	7 122
	40	12.19	58.4	65' 3"	19.9	18,400	8 346	27,000	12 247	12,900	5 851
	50	15.24	48.1	57' 9"	17.6	13,300	6 033	19,900	9 027	9,300	4 218
	60	18.29	35.9	46' 8"	14.2	10,100	4 581	15,500	7 031	6,900	3 130
	70	21.34	17.6	26' 10"	8.2	7,800	3 538	12,400	5 625	5,200	2 359
80' (24.38 m)	16	4.88	80.9	84' 8"	25.8	73,600	33 385	104,100	47 220	47,100	21 365
	20	6.10	77.9	83' 11"	25.6	50,800	23 043	72,200	32 750	34,100	15 468
	25	7.62	74.2	82' 8"	25.2	36,100	16 375	51,700	23 451	24,900	11 295
	30	9.14	70.5	81' 1"	24.7	27,700	12 565	40,000	18 144	19,300	8 754
	35	10.67	66.6	79' 1"	24.1	22,200	10 070	32,300	14 651	15,300	6 940
	40	12.19	62.7	76' 9"	23.4	18,300	8 301	26,900	12 202	12,900	5 851
	50	15.24	54.3	70' 7"	21.5	13,200	5 988	19,900	9 027	9,200	4 173
	60	18.29	44.8	62' 2"	18.9	10,000	4 536	15,400	6 985	6,900	3 130
	70	21.3	33.5	49' 10"	15.2	7,800	3 538	12,400	5 625	5,200	2 359
	80	24.38	16.5	28' 4"	8.7	6,200	2 812	10,100	4 581	3,900	1 769
90' (27.43 m)	18	5.49	80.6	94' 5"	28.8	60,300	27 352	85,400	38 737	36,600	16 602
	20	6.10	79.3	94' 2"	28.7	50,800	23 043	72,200	32 750	24,900	11 295
	25	7.62	76.0	93' 0"	28.4	36,100	16 375	51,700	23 451	19,300	8 754
	30	9.14	72.7	91' 7"	27.9	27,600	12 519	39,900	18 099	15,300	6 940
	35	10.67	69.4	89' 11"	27.4	22,100	10 025	32,200	14 606	12,800	4 309
	40	12.19	65.9	87' 10"	26.8	18,200	8 256	26,900	12 202	9,500	5 806
	50	15.24	58.7	82' 7"	25.2	13,100	5 942	19,800	8 981	6,800	3 084
	60	18.29	50.9	75' 6"	23.0	9,900	4 491	15,400	6 985	5,100	2 313
	70	21.34	42.2	66' 1"	20.1	7,700	3 493	12,300	5 579	3,900	1 769
	80	24.38	31.5	52' 9"	18.3	6,100	2 767	10,100	4 581	2,900	1 315
	90	27.43	15.5	29' 9"	9.1	4,900	2 223	8,300	3 765	2,600	1 179
100' (30.48 m)	19	5.79	81.0	104' 5"	31.8	55,100	24 993	78,300	35 517	36,600	16 602
	25	7.62	77.5	103' 3"	31.5	36,000	16 329	51,600	23 406	24,800	11 249
	30	9.14	74.5	102' 0"	31.1	27,500	12 474	39,800	18 053	19,100	8 664
	35	10.67	71.5	100' 6"	30.6	22,000	9 979	32,100	14 561	15,400	6 985
	40	12.19	68.5	98' 8"	30.1	18,100	8 210	26,700	12 111	12,600	5 715
	50	15.24	62.1	94' 1"	28.7	13,000	5 897	19,700	8 936	9,000	4 082
	60	18.29	55.4	88' 0"	26.8	9,800	4 445	15,200	6 895	6,600	2 994
	70	21.34	48.1	80' 2"	24.4	7,600	3 447	12,200	5 534	5,000	2 268
	80	24.38	39.9	69' 10"	21.3	6,000	2 722	10,000	4 536	3,800	1 724
	90	27.43	29.9	55' 5"	16.9	4,800	2 177	8,200	3 720	2,800	1 270
	100	30.48	14.7	31' 1"	9.5	3,800	1 724	6,900	3 130	2,000	907

⊙ Measured vertically from center of boom head sheave to ground.

LS-138H Lift Crane Capacities

continued

Length	Boom					Side Frames Extended				Retracted	
	Radius		Angle	Boom Pt.Height①		Ctwt. "A"		Ctwt. "AB"		Ctwt. "A"	
	feet	meters	degree	feet	meters	pounds	kilograms	pounds	kilograms	pounds	kilograms
110′ (33.53 m)	25	7.62	78.6	113′ 6″	34.6	35,900	16 284	51,500	23 360	24,600	11 159
	30	9.14	75.9	112′ 4″	34.2	27,400	12 429	39,700	18 008	19,000	8 618
	35	10.67	73.2	111′ 0″	33.8	21,900	9 934	32,000	14 515	15,200	6 895
	40	12.19	70.5	109′ 4″	33.3	18,000	8 165	26,600	12 066	12,500	5 670
	50	15.24	64.9	105′ 3″	32.1	12,900	5 851	19,500	8 845	8,800	3 992
	60	18.29	59.0	99′ 11″	30.4	9,700	4 400	15,100	6 849	6,500	2 948
	70	21.34	52.7	93′ 1″	28.4	7,500	3 402	12,000	5 443	4,800	2 177
	80	24.38	45.8	84′ 6″	25.8	5,900	2 676	9,800	4 445	3,600	1 633
	90	27.43	38.0	73′ 4″	22.4	4,600	2 087	8,100	3 674	2,700	1 225
	100	30.48	28.4	58′ 1″	17.7	3,700	1 678	6,800	3 084	—	—
	110	33.53	14.0	32′ 4″	9.8	2,800	1 270	5,600	2 540	—	—
120′ (36.58 m)	25	7.62	79.6	123′ 8″	37.7	35,800	16 239	51,500	23 360	24,500	11 113
	30	9.14	77.1	122′ 8″	37.4	27,300	12 383	39,600	17 963	18,900	8 573
	35	10.67	74.7	121′ 5″	37.0	21,800	9 888	31,900	14 470	15,100	6 849
	40	12.19	72.2	119′ 11″	36.6	17,900	8 119	26,500	12 020	12,400	5 625
	50	15.24	67.1	116′ 2″	35.4	12,800	5 806	19,400	8 800	8,700	3 946
	60	18.29	61.8	111′ 5″	34.0	9,500	4 309	15,000	6 804	6,300	2 858
	70	21.34	56.2	105′ 5″	32.1	7,300	3 311	11,900	5 398	4,700	2 132
	80	24.38	50.3	97′ 11″	29.9	5,700	2 586	9,700	4 400	3,500	1 588
	90	27.43	43.7	88′ 7″	27.0	4,500	2 041	8,000	3 629	2,500	1 134
	100	30.48	36.3	76′ 8″	23.4	3,500	1 588	6,600	2 994	—	—
	110	33.53	27.2	60′ 6″	18.4	2,700	1 225	5,500	2 495	—	—
	120	36.58	13.4	33′ 6″	10.2	2,000	907	4,600	2 087	—	—
130′ (39.62 m)	25	7.62	80.4	133′ 10″	40.8	35,700	16 194	51,400	23 315	Not Applicable	
	30	9.14	78.1	132′ 11″	40.5	27,300	12 383	39,500	17 917		
	35	10.67	75.9	131′ 9″	40.2	21,600	9 798	31,800	14 424		
	40	12.19	73.6	130′ 4″	39.8	17,700	8 029	26,400	11 975		
	50	15.24	68.9	127′ 0″	38.7	12,600	5 715	19,300	8 754		
	60	18.29	64.1	122′ 8″	37.4	9,400	4 264	14,800	6 713		
	70	21.34	59.1	117′ 3″	35.7	7,200	3 266	11,700	5 307		
	80	24.38	53.8	110′ 7″	33.7	5,600	2 540	9,500	4 309		
	90	27.43	48.2	102′ 6″	31.2	4,300	1 950	7,800	3 538		
	100	30.48	41.9	92′ 6″	28.2	3,400	1 542	6,500	2 948		
	110	33.53	34.8	79′ 11″	24.4	2,600	1 179	5,400	2 449		
	120	36.58	26.1	62′ 11″	19.2	—	—	4,500	2 041		
	130	39.62	12.9	34′ 8″	10.6	—	—	3,700	1 678		
140′ (42.67 m)	30	9.14	79.0	143′ 1″	43.6	27,100	12 293	39,400	17 872		
	35	10.67	76.9	142′ 0″	43.3	21,500	9 752	31,600	14 334		
	40	12.19	74.8	140′ 9″	42.9	17,600	7 983	26,200	11 884		
	50	15.24	70.5	137′ 8″	42.0	12,500	5 670	19,100	8 664		
	60	18.29	66.1	133′ 8″	40.7	9,200	4 173	14,600	6 623		
	70	21.34	61.5	128′ 9″	39.3	7,000	3 175	11,600	5 262		
	80	24.38	56.8	122′ 9″	37.4	5,400	2 449	9,300	4 218		
	90	27.43	51.7	115′ 7″	35.2	4,200	1 905	7,600	3 447		
	100	30.48	46.3	106′ 11″	32.6	3,200	1 452	6,300	2 858		
	110	33.53	40.3	96′ 3″	29.4	2,400	1 089	5,200	2 359		
	120	36.58	33.5	83′ 0″	25.3	—	—	4,300	1 951		
	130	39.62	25.2	65′ 2″	19.9	—	—	3,500	1 588		
	140	42.67	12.4	35′ 9″	10.9	—	—	2,900	1 315		
150′ (45.72 m)	30	9.14	79.7	153′ 3″	46.7	27,000	12 247	39,300	17 826		
	35	10.67	77.8	152′ 3″	46.4	21,400	9 707	31,500	14 288		
	40	12.19	75.8	151′ 1″	46.1	17,400	7 893	26,100	11 839		
	50	15.24	71.9	148′ 2″	45.2	12,300	5 579	18,900	8 573		
	60	18.29	67.8	144′ 6″	44.0	9,000	4 082	14,400	6 532		
	70	21.34	63.6	140′ 0″	42.7	6,800	3 084	11,400	5 171		
	80	24.38	59.2	134′ 7″	41.0	5,200	2 359	9,100	4 128		
	90	27.43	54.7	128′ 1″	39.0	3,900	1 769	7,400	3 357		
	100	30.48	49.8	120′ 4″	36.7	3,000	1 361	6,100	2 767		
	110	33.53	44.6	111′ 1″	33.9	2,000	907	5,000	2 268		
	120	36.58	38.9	99′ 10″	30.4	—	—	4,100	1 860		
	130	39.62	32.3	85′ 11″	26.2	—	—	3,300	1 497		
	140	42.67	24.3	67′ 4″	20.5	—	—	2,700	1 225		
	150	45.72	12.0	36′ 10″	11.2	—	—	2,000	907		

① Measured vertically from center of boom head sheave to ground.

LS-138H Lift Crane Capacities

continued

refer to notes below

Length	Boom Radius feet	Boom Radius meters	Boom Angle degree	Boom Pt.Height© feet	Boom Pt.Height© meters	Side Frames Extended Ctwt. "A" pounds	Side Frames Extended Ctwt. "A" kilograms	Side Frames Extended Ctwt. "AB" pounds	Side Frames Extended Ctwt. "AB" kilograms	Retracted Ctwt. "A" pounds	Retracted Ctwt. "A" kilograms
160' (48.77 m)	30	9.14	80.4	163' 5"	49.8	Not Applicable		39,100	17 736	Not Applicable	
	35	10.67	78.6	162' 6"	49.5			31,400	14 243		
	40	12.19	76.7	161' 5"	49.2			25,900	11 748		
	50	15.24	73.0	158' 8"	48.4			18,800	8 528		
	60	18.29	69.2	155' 3"	47.3			14,300	6 486		
	70	21.34	65.4	151' 1"	46.1			11,200	5 080		
	80	24.38	61.3	146' 1"	44.5			9,000	4 082		
	90	27.43	57.2	140' 1"	42.7			7,200	3 266		
	10	30.48	52.8	133' 1"	40.6			5,900	2 676		
	110	33.53	48.2	124' 10"	38.1			4,800	2 177		
	120	36.58	43.2	115' 1"	35.1			3,900	1 769		
	130	39.62	37.6	103' 4"	31.5			3,100	1 406		
	140	42.67	31.3	88' 9"	27.1			2,500	1 134		
	150	45.72	23.5	69' 6"	21.2			—	—		
	160	48.77	11.6	37' 11"	11.6			—	—		
170' (51.82 m)	30	9.14	81.0	173' 7"	52.9			38,000	17 237		
	35	10.67	79.2	172' 8"	52.6			31,200	14 152		
	40	12.19	77.5	171' 8"	52.3			25,800	11 703		
	50	15.24	74.0	169' 1"	51.6			18,600	8 437		
	60	18.29	70.5	165' 11"	50.6			14,100	6 396		
	70	21.34	66.9	162' 0"	49.4			11,000	4 990		
	80	24.38	63.2	157' 4"	48.0			8,800	3 992		
	90	27.43	59.3	151' 11"	46.3			7,100	3 221		
	100	30.48	55.3	145' 6"	44.4			5,700	2 586		
	110	33.53	51.1	138' 1"	42.1			4,600	2 087		
	120	36.58	46.6	129' 3"	39.4			3,700	1 678		
	130	39.62	41.8	119' 0"	36.3			3,000	1 361		
	140	42.67	36.5	106' 8"	32.5			2,300	1 043		
	150	45.72	30.3	91' 6"	27.9			—	—		
	160	48.77	22.8	71' 6"	21.8			—	—		
	170	51.82	11.3	38' 11"	11.9			—	—		
180' (54.86 m)	35	10.67	79.9	182' 10"	55.7			31,100	14 107		
	40	12.19	78.2	181' 10"	55.5			25,600	11 612		
	50	15.24	75.0	179' 6"	54.7			18,400	8 346		
	60	18.29	71.6	176' 6"	53.8			13,900	6 305		
	70	21.34	68.2	172' 10"	52.7			10,800	4 899		
	80	24.38	64.8	168' 6"	51.4			8,600	3 901		
	90	27.43	61.2	163' 5"	49.8			6,900	3 130		
	100	30.48	57.5	157' 6"	48.0			5,500	2 495		
	110	33.53	53.6	150' 7"	45.9			4,500	2 041		
	120	36.58	49.6	142' 8"	43.5			3,600	1 633		
	130	39.62	45.3	133' 6"	40.7			2,800	1 270		
	140	42.67	40.6	122' 9"	37.4			2,100	953		
	150	45.72	35.4	109' 11"	33.5			—	—		
	160	48.77	29.5	94' 2"	28.7			—	—		
	170	51.82	22.1	73' 6"	22.4			—	—		
	180	54.86	11.0	39' 10"	12.2			—	—		

© Measured vertically from center of boom head sheave to ground.

Notes

1. The capacities included in this chart are the maximum allowable, and are based on machine standing level on firm supporting surface under ideal job conditions.
2. Capacities are based on 75% of minimum tipping loads unless marked with an asterisk (*).
   (*) Asterisk indicates capacities based on factors other than those which would cause a tipping condition.
3. Capacities based on freely suspended loads and make no allowance for such factors as the effect of wind, sudden stopping of loads, supporting surface conditions, and operating speeds. Operator must reduce load ratings to take such conditions into account. Deduction from rated capacities must be made for weight of hook block, weighted ball / hook, sling, spreader bar, or other suspended gear.
4. 54" (1.37m) tubular boom with open throat top section — for lifting 150,000# (68 040 kg), 8-part load hoist line (7/8" — 22 mm, Type "N" wire rope) is required. Check parts of line required for all capacities.
5. Retractable high gantry must be fixed in raised position for all capacities on this chart.
6. Boom lengths exceeding 120' (36.58 m) must be erected and lowered over end. Adequate blocking must be placed under the tread member sprockets to prevent the machine from rocking.
7. For boom length exceeding 140' (42.67 m) the mid-point suspension pendants are required.
8. Least stable position is over the side.
9. Main boom length must not exceed 180' (54.86 m).
10. These capacities apply only to the machine as originally manufactured and normally equipped by Link-Belt Construction Equipment Company.

Dragline and Clamshell Capacities

refer to notes below

Length	Boom			Side Frames Extended — Counterweight "A" Only			
	Radius		Angle	Dragline		Clamshell	
	feet	meters	degrees	pounds	kilograms	pounds	kilograms
40' (12.19 m)	15	4.57	73.0	—	—	15,800	7 167
	20	6.10	65.3	—	—	15,800	7 167
	25	7.62	57.1	15,800	7 167	15,800	7 167
	30	9.14	48.1	15,800	7 167	15,800	7 167
	35	10.67	37.5	15,800	7 167	15,800	7 167
	40	12.19	23.4	—	—	15,800	7 167
50' (15.24 m)	20	6.10	70.5	—	—	15,800	7 167
	25	7.62	64.3	—	—	15,800	7 167
	30	9.14	57.7	15,800	7 167	15,800	7 167
	35	10.67	50.6	15,800	7 167	15,800	7 167
	40	12.19	42.7	15,800	7 167	15,800	7 167
	50	15.24	20.9	—	—	11,700	5 307
60' (18.29 m)	25	7.62	68.8	—	—	15,800	7 167
	30	9.14	63.6	—	—	15,800	7 167
	35	10.67	58.1	15,800	7 167	15,800	7 167
	40	12.19	52.3	15,800	7 167	15,800	7 167
	50	15.24	38.9	13,300	6 033	11,900	5 398
	60	18.29	19.0	—	—	9,000	4 082
70' (21.34 m)	25	7.62	71.9	—	—	15,800	7 167
	30	9.14	67.6	—	—	15,800	7 167
	35	10.67	63.1	—	—	15,800	7 167
	40	12.19	58.4	15,800	7 167	15,800	7 167
	50	15.24	48.1	13,300	6 033	11,900	5 398
	60	18.29	35.9	10,100	4 581	9,000	4 082
	70	21.34	17.6	—	—	7,000	3 175

Notes

1. The capacities included in this chart are the maximum allowable, and are based on machine standing level on firm supporting surface under ideal job conditions.

2. Capacities are based on 75% of minimum tipping loads for dragline; 67.5% for clamshell.

3. Capacities are maximum recommended by PCSA Standard #4. User must make allowances for soft or uneven supporting surfaces, rapid cycle operations, bucket suction or other unfavorable conditions which may require smaller buckets for most efficient operation.

4. Weight of bucket, plus load should not exceed these capacities.

5. Dragline operation with boom angles less than 35° is not recommended.

6. Boom length for dragline / clamshell attachment operation should not exceed 70' (21.34 m).

7. Refer to notes 5,8 and 10 under "Notes — lifting crane capacities".

LS-138H Working Ranges

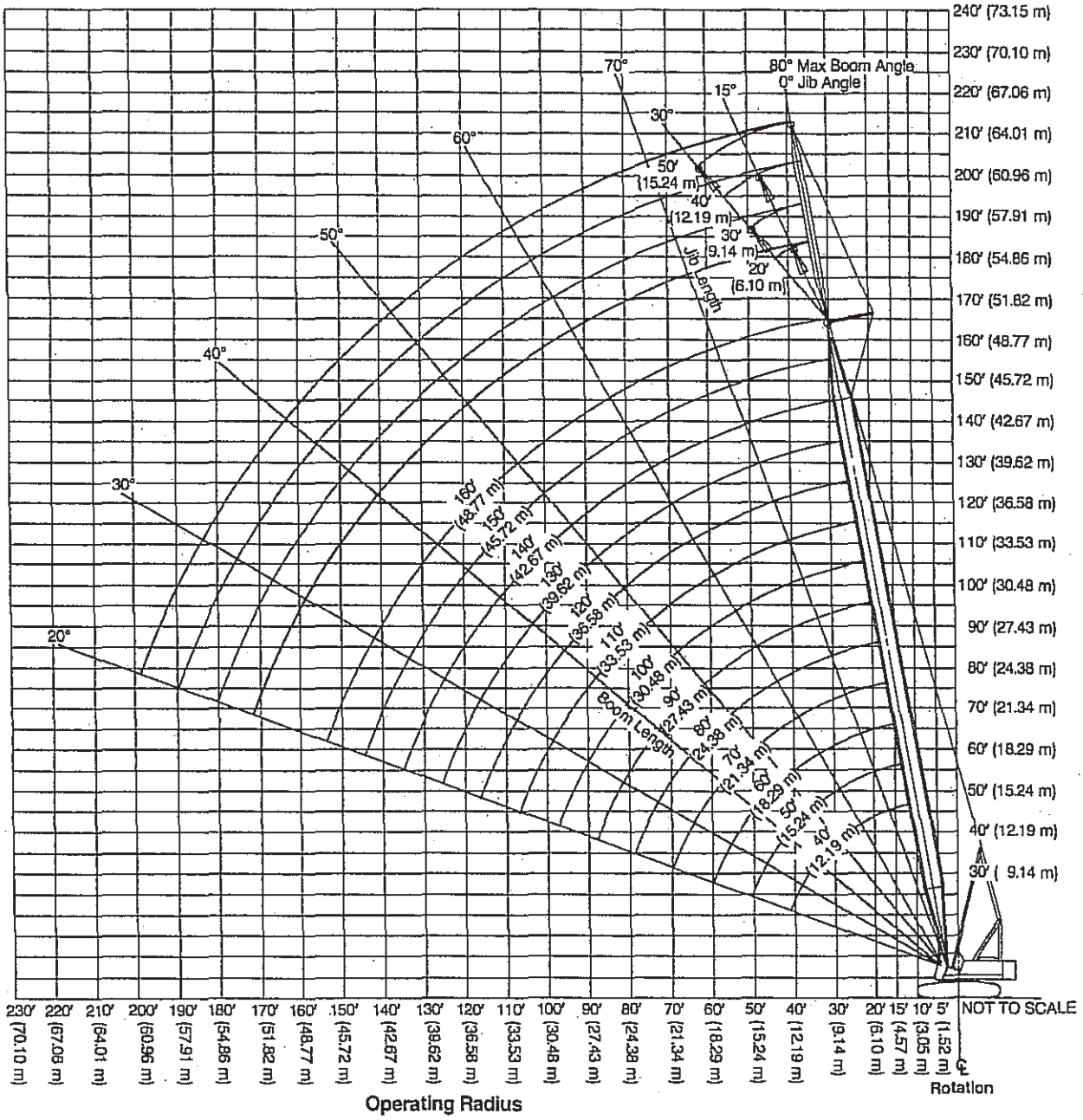

Link-Belt® is a registered trademark.

We are constantly improving our products and therefore reserve the right to change designs and specifications.

Load Charts

GROVE RT650E

GROVE®

LOAD CHARTS
RT650E

85% STABILITY
ON OUTRIGGERS
75% STABILITY
ON RUBBER

225694

SERIAL NUMBER

Dimensions and weights

Dimensions

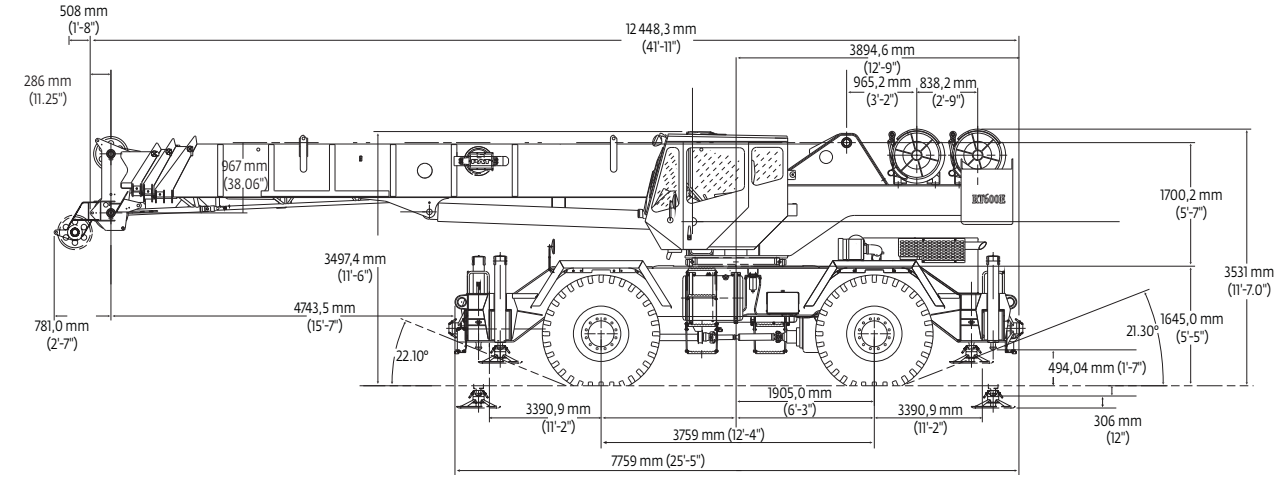

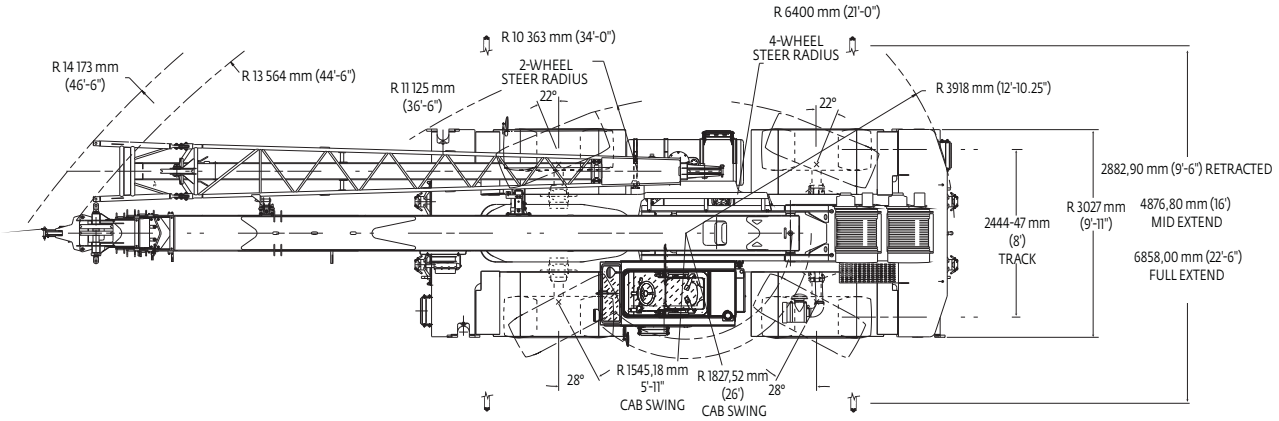

Weights

	GVW		Front		Rear	
	kg	(lb)	kg	(lb)	kg	(lb)
RT600E Basic Machine: Including 105 ft main boom, main hoist with 450 ft of wire rope, IPO, full pinned counterweight, and air conditioner	34726	(76,558)	17 433	(38,434)	17 293	(38,124)
Add: 29 ft - 51 ft telescopic swingaway + carrier brackets	-957.00	(2109)	1432	(3456)	-611	(-1347)
Add: 450 ft of wire rope on Auxiliary Hoist	-255	(563)	-96	(-213)	-342	(755)
Add: Auxiliary boom nose	59	(131)	162	(358)	-102	(-227)
Add: 35 t (40 USt) 3-sheave hookblock (stowed in trough)	373	(823)	383	(845)	-9.9	(-22)
Add: 45 t (50 USt) 3-sheave hookblock (stowed in trough)	458	(1010)	470	(1037)	-12	(-27)
Add: 7,5 t (8.3 USt) headache ball	161	(355)	279	(616)	-118	(-261)
Add: Full aluminum decking	113	(250)	58	(128)	55	(122)
Remove: Counterweight	-5447	(-12,008)	2213	(4878)	-7659	(-16,886)

TABLE OF CONTENTS

GENERAL NOTES....4
WEIGHT REDUCTIONS / LINE PULLS & REEVING INFO....5
LIFTING AREA DIAGRAMS....6
RANGE DIAGRAM....7

ON OUTRIGGERS FULLY EXTENDED
MAIN BOOM....8
EXTENSION....9

ON RUBBER....10-11

ON OUTRIGGERS 50% EXTENDED
MAIN BOOM....13
EXTENSION....14

ON OUTRIGGERS 0% EXTENDED
MAIN BOOM....15

TIRE INFLATION....16

NOTES FOR LIFTING CAPACITIES

GENERAL:

1. Rated loads as shown on lift chart pertain to this machine as originally manufactured and equipped. Modifications to the machine or use of optional equipment other than that specified can result in a reduction of capacity.
2. Construction equipment can be hazardous if improperly operated or maintained. Operation and maintenance of this machine shall be in compliance with the information in the Operator's and Safety Handbook, Service Manual and Parts Manual supplied with this machine. If these manuals are missing, order replacements from the manufacturer through the distributor.
3. The operator and other personnel associated with machine shall fully acquaint themselves with the latest American National Safety Standards (ASME/ANSI) for cranes.

SETUP:

1. The machine shall be level and on a firm supporting surface. Depending on the nature of the supporting surface, it may be necessary to have structural supports under the outrigger floats or tires to spread the load to a larger bearing surface.
2. For outrigger operation, all outriggers shall be properly extended with tires raised free of crane weight before operating the boom or lifting loads.
3. When machine is equipped with center front stabilizer, the front stabilizer shall be set in accordance with instructions in Operator's and Safety Handbook.
4. When equipped with removable and/or extendible counterweight, the proper counterweight shall be installed and fully extended before and during operation.
5. Tires shall be inflated to the recommended pressure before lifting on rubber.
6. With certain boom and hoist tackle combinations, maximum capacities may not be obtainable with standard cable lengths.
7. Unless approved by the crane manufacturer, do not travel with boom extension or jib erected unless otherwise noted. Refer to Operator's and Safety Handbook for job-site travel information.

OPERATION:

1. Rated loads at rated radius shall not be exceeded. Do not attempt to tip the machine to determine allowable loads. For clamshell, grapple, magnet or concrete bucket operation, weight of component and load must not exceed 80% of rated lifting capacities.
2. All rated loads have been tested to and meet the requirements of SAE J1063 - Cantilevered Boom Crane Structures - Method of Test, and do not exceed 85% of the tipping load on outriggers fully extended and SAE J1289 - Mobile Crane Stability Ratings [1.25P < (T-0.1A)] on outriggers 50% and 0% extended (fully retracted) as determined by SAE J765 - Crane Stability Test Code.
3. Rated loads include the weight of hookblock, slings and auxiliary lifting devices and their weights shall be subtracted from the listed rating to obtain the net load to be lifted. When more than the minimum required parts of line needed to pick the load are used, the additional rope weight as measured from the lower sheaves of the the main boom nose shall be considered part of the load to be lifted. When both the hook block and headache ball are reeved, the lifting device that is NOT in use, including the line as measured from the lower sheave(s) of the nose supporting the unused device shall be considered part of the load.
4. Load ratings are based on freely suspended loads. No attempt shall be made to move a load horizontally on the ground in any direction.
5. The maximum in-service wind speed is 20 m.p.h. It is recommended when wind velocity is above 20 m.p.h., rated loads and boom lengths shall be appropriately reduced. For machines not in-service, the main boom should be retracted and lowered with the swing brake set in wind velocities over 30 m.p.h.
6. Rated loads are for lift crane service only.
7. Do not operate at a radius or boom length where capacities are not listed. At these positions, the machine may overturn without any load on the hook.
8. The maximum load which can be telescoped is not definable because of variations in loadings and crane maintenance, but it is safe to attempt retraction and extension of the boom within the limits of the capacity chart.
9. When the boom length or lift radius or both are between values listed, the smallest load shown at either the next larger radius or next longer or shorter boom length shall be used.
10. For safe operation, the user shall make due allowances for his particular job conditions, such as: soft or uneven ground, out of level conditions, high winds, side loads, pendulum action, jerking or sudden stopping of loads, experience of personnel, two machine (tandem) lifts, traveling with loads, electric wires, obstacles, hazardous conditions, etc. Side pull on boom or jib is extremely dangerous.
11. If machine is equipped with individually controlled powered boom sections, the boom sections must be extended equally at all times.
12. Never handle personnel with this machine unless the requirements of the applicable national, state, and local regulations and safety codes are met.
13. Keep load handling devices a minimum of 42 inches below boom head at all times.
14. The boom angle before loading should be greater than the loaded boom angle to account for deflection.
15. Capacities appearing above the bold line are based on structural strength and tipping should not be relied upon as a capacity limitation.
16. Capacities for the 33 ft. boom length shall be lifted with boom fully retracted. If boom is not fully retracted, capacities shall not exceed those shown for the 40 ft. boom length.
17. When operating the machine in the "On Outriggers 50% Extended (16' spread)" mode, the outrigger beam pins must be engaged. When operating in the "On Outriggers 0% Extended (9' 5.5" spread)" mode, the outrigger beams must be fully retracted. Failure to follow these precautions could result in structural damage or loss of stability of the machine.
18. Regardless of counterweight and outrigger spread configuration, no deduct is required from the main boom charts for a stowed boom extension.
19. Do not lift loads when boom is fully lowered. The Load Moment Indicator (LMI) senses pressure and will not provide warnings or lockout. The crane can become overloaded if lift cylinder(s) is fully retracted.
20. The maximum outrigger pad load is 69,100 lb.

DEFINITIONS:

1. Operating Radius: Horizontal distance from a projection of the axis of rotation to the supporting surface before loading to the center of the vertical hoist line or tackle with load applied.
2. Loaded Boom Angle (Shown in Parenthesis on Main Boom Capacity Chart): is the angle between the boom base section and the horizontal, after lifting the rated load at the rated radius with the rated boom length.
3. Working Area: Areas measured in a circular arc about the center line of rotation as shown on the working area diagram.
4. Freely Suspended Load: Load hanging free with no direct external force applied except by the lift cable.
5. Side Load: Horizontal force applied to the lifted load either on the ground or in the air.

WEIGHT REDUCTIONS FOR LOAD HANDLING DEVICES

29 FT. OFFSETTABLE BOOM EXTENSION	
*Erected -	4,412 lb.
29 FT. - 51 FT. TELE. BOOM EXTENSION	
*Erected (Retracted) -	6,611 lb.
*Erected (Extended) -	9,332 lb.

*Reduction of main boom capacities

When lifting over swingaway and/or jib combinations, deduct total weight of all load handling devices reeved over main boom nose directly from swingaway or jib capacity.

NOTE: All load handling devices and boom attachments are considered part of the load and suitable allowances MUST BE MADE for their combined weights. Weights are for Grove furnished equipment.

AUXILIARY BOOM NOSE	137 lb.
HOOKBLOCKS and HEADACHE BALLS:	
50 Ton, 4 Sheave	1075 lb.+
50 Ton, 3 Sheave	1000 lb.+
40 Ton, 3 Sheave	800 lb.+
8.3 Ton Headache Ball (non-swivel)	350 lb.+
8.3 Ton Headache Ball (swivel)	370 lb.+

+Refer to rating plate for actual weight.

LINE PULLS AND REEVING INFORMATION

HOISTS	CABLE SPECS.	PERMISSIBLE LINE PULLS	NOMINAL CABLE LENGTH
Main	3/4" (19 mm) 6x37 Class, EIPS, IWRC Special Flexible Min. Breaking Strength 58,800 lb.	16,800 lb.	450 ft.
Main & Aux.	3/4" (19 mm) Flex-X 35 Rotation Resistant (non-rotating) Min. Breaking Strength 85,800 lb.	16,800 lb.	450 ft.

The approximate weight of 3/4" wire rope is 1.5 lb./ft.

HOIST PERFORMANCE

Wire Rope Layer	Hoist Line Pulls Two Speed Hoist		Drum Rope Capacity (ft.)	
	Low	High	Layer	Total
	Available lb.*	Available lb.*		
1	18,134	9,067	101	101
2	16,668	8,334	110	211
3	15,420	7,710	120	331
4	14,347	7,174	129	460
5	13,413	6,707	139	599
6	12,594	6,297	149	748

*Max. lifting capacity: 6x37 and 35x7 class = 16,800 lb.

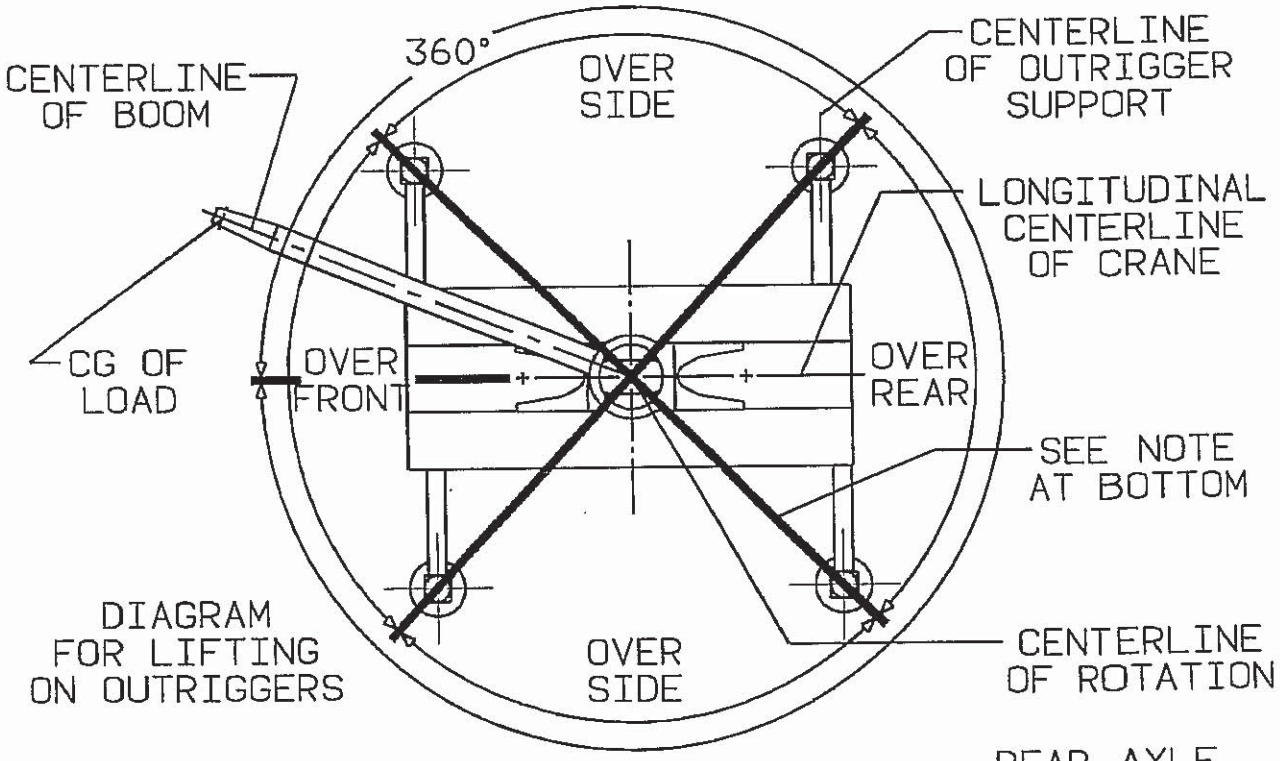

DIAGRAM FOR LIFTING ON OUTRIGGERS

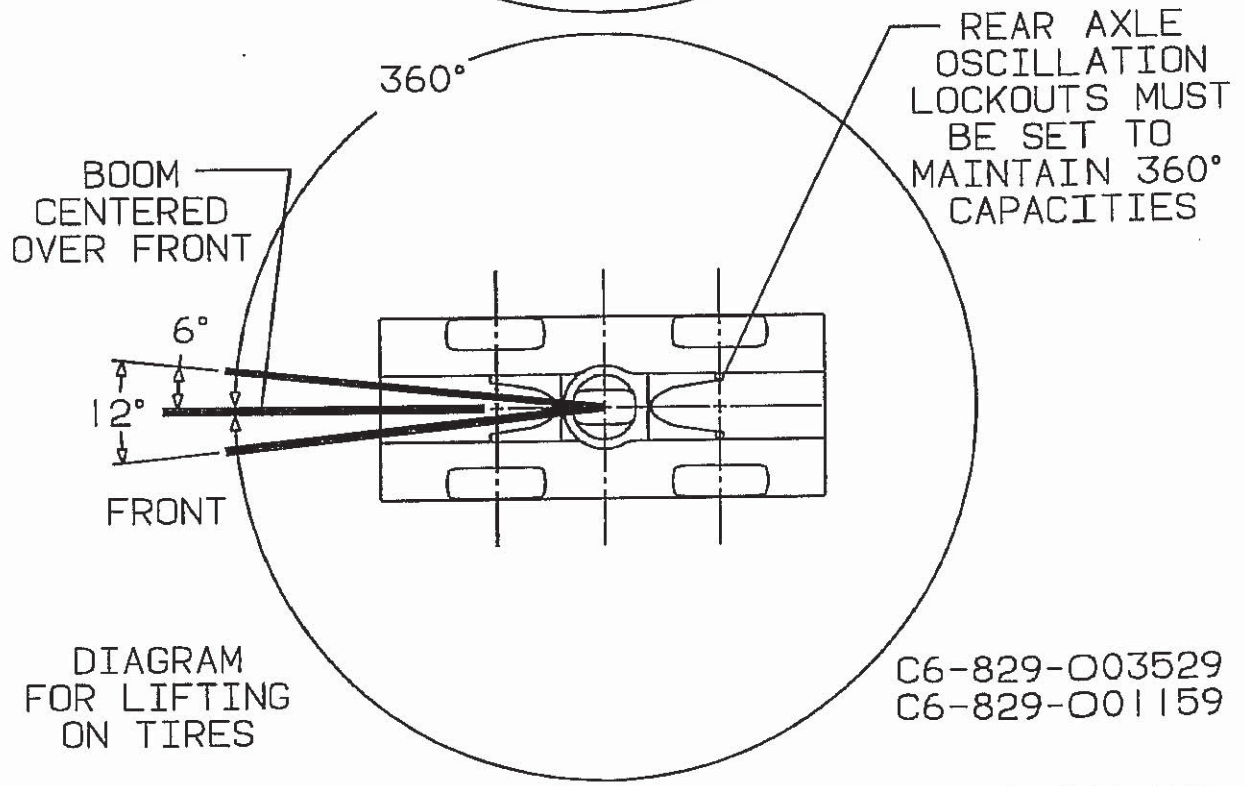

DIAGRAM FOR LIFTING ON TIRES

C6-829-003529
C6-829-001159

BOLD LINES DETERMINE THE LIMITING POSITION OF ANY LOAD FOR OPERATION WITHIN WORKING AREAS INDICATED

WORKING AREA DIAGRAM

WORKING RANGE DIAGRAM

(BOOM DEFLECTION NOT SHOWN) D6-829-100776

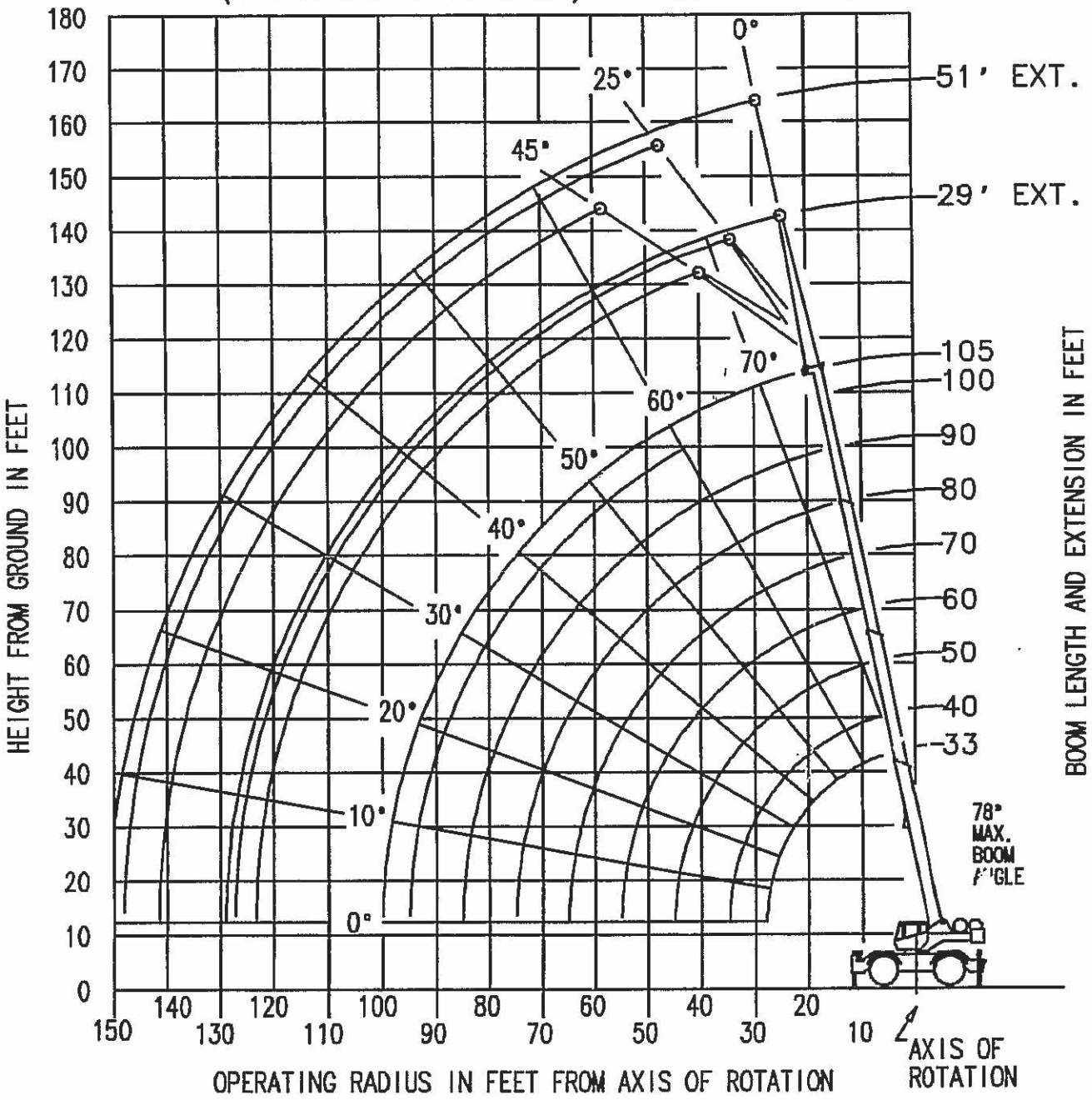

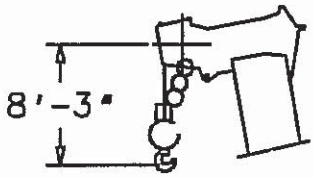

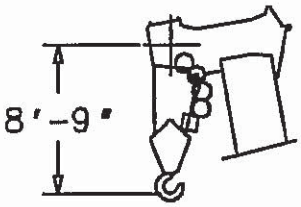

DIMENSIONS ARE FOR LARGEST GROVE FURNISHED HOOK BLOCK AND HEADACHE BALL, WITH ANTI-TWO BLOCK ACTIVATED.

RATED LIFTING CAPACITIES IN POUNDS
33 FT. - 105 FT. BOOM
ON OUTRIGGERS FULLY EXTENDED - 360°

Radius in Feet	#0001								
	Main Boom Length in Feet								
	33	40	50	60	70	80	90	100	105
10	100,000 (69.5)	80,550 (73.5)	67,250 (77)						
12	87,100 (65.5)	79,150 (70.5)	64,200 (75)	*56,100 (78)					
15	69,050 (59.5)	69,550 (65.5)	59,950 (71)	51,800 (75)	45,200 (77.5)				
20	50,500 (47.5)	50,950 (57)	51,400 (64.5)	44,500 (69.5)	38,550 (73)	34,450 (75.5)	*31,400 (78)		
25	38,300 (32)	38,850 (47)	39,350 (58)	39,650 (64.5)	37,100 (68.5)	29,850 (72)	27,250 (74.5)	21,000 (76.5)	18,350 (77.5)
30		30,700 (34.5)	31,200 (50.5)	31,500 (58.5)	31,700 (64)	26,350 (68)	24,100 (71)	21,000 (73.5)	18,350 (74.5)
35			25,450 (41.5)	25,750 (52.5)	26,000 (59)	23,650 (64)	21,500 (67.5)	19,150 (70)	18,350 (71.5)
40	See Note 16		20,850 (30.5)	21,200 (46)	21,600 (54)	21,350 (59.5)	19,400 (64)	16,650 (67)	17,300 (68.5)
45				17,100 (38)	17,350 (48.5)	17,300 (55)	17,300 (60)	14,650 (64)	15,750 (65.5)
50				13,950 (28)	14,150 (42.5)	14,200 (50.5)	14,200 (56)	13,000 (60.5)	14,300 (62.5)
55					11,700 (35)	11,750 (45.5)	11,850 (52)	11,900 (57)	12,000 (59)
60					9,730 (26)	9,870 (39.5)	9,980 (47.5)	10,100 (53.5)	10,150 (55.5)
65						8,300 (33)	8,440 (42.5)	8,600 (49.5)	8,680 (52)
70						6,960 (24.5)	7,170 (37.5)	7,340 (45.5)	7,430 (48.5)
75							6,080 (31)	6,290 (40.5)	6,390 (44.5)
80							5,130 (23)	5,380 (35.5)	5,490 (40)
85								4,580 (29.5)	4,720 (35)
90								3,880 (22)	4,020 (29)
95									3,400 (21.5)
Minimum boom angle (°) for indicated length (no load)									0
Maximum boom length (ft.) at 0° boom angle (no load)									105

NOTE: ( ) Boom angles are in degrees.
#LMI operating code. Refer to LMI manual for operating instructions.
*This capacity is based on maximum boom angle.

Lifting Capacities at Zero Degree Boom Angle
On Outriggers Fully Extended - 360°

Boom Angle	Main Boom Length in Feet								
	33	40	50	60	70	80	90	100	
0°	16,250 (28.2)	12,500 (35)	8,780 (45)	6,290 (55)	4,510 (65)	3,160 (75)	2,110 (85)	1,260 (95)	

NOTE: ( ) Reference radii in feet.

A6-829-10093G

29 FT. - 51 FT. TELE OFFSETTABLE BOOM EXTENSION ON OUTRIGGERS FULLY EXTENDED - 360°

Radius in Feet	**29 ft. LENGTH			51 ft. LENGTH		
	#0021	#0022	#0023	#0041	#0042	#0043
	0° OFFSET	25° OFFSET	45° OFFSET	0° OFFSET	25° OFFSET	45° OFFSET
30	*9,000 (78)					
35	9,000 (77)			*6,000 (78)		
40	9,000 (74.5)	8,000 (77.5)		6,000 (77)		
45	9,000 (72.5)	7,560 (76)	*5,660 (78)	6,000 (76)		
50	8,760 (70)	7,170 (74)	5,600 (76)	6,000 (74)		
55	8,030 (67.5)	6,820 (71.5)	5,500 (73.5)	6,000 (72)	*4,120 (78)	
60	7,380 (65)	6,500 (69)	5,300 (71)	6,000 (70)	3,900 (77)	
65	6,770 (62.5)	6,210 (66.5)	5,180 (68.5)	6,000 (68)	3,710 (75)	*2,740 (78)
70	6,210 (60)	5,950 (64)	4,890 (66)	5,620 (66)	3,530 (72.5)	2,660 (76.5)
75	5,710 (57.5)	5,710 (61.5)	4,620 (63)	5,210 (64)	3,370 (70.5)	2,580 (74)
80	5,250 (55)	5,500 (58.5)	4,370 (60.5)	4,860 (61.5)	3,220 (68.5)	2,520 (72)
85	4,790 (52)	5,300 (56)	4,100 (57.5)	4,540 (59.5)	3,080 (66)	2,460 (69.5)
90	4,090 (49)	4,650 (53)	3,820 (54)	4,260 (57)	2,960 (63.5)	2,410 (67)
95	3,480 (46)	3,960 (49.5)		4,000 (55)	2,850 (61.5)	2,360 (64.5)
100	2,930 (42.5)	3,350 (46)		3,770 (52.5)	2,750 (59)	2,330 (62)
105	2,440 (39)	2,810 (42.5)		3,360 (50)	2,660 (56)	2,300 (59)
110	2,000 (35)	2,320 (38.5)		2,910 (47.5)	2,570 (53.5)	2,280 (56)
115	1,610 (30.5)			2,500 (44.5)	2,500 (50.5)	
120	1,250 (25.5)			2,120 (41.5)	2,430 (47.5)	
125				1,780 (38.5)	2,250 (44.5)	
130				1,470 (35)	1,820 (40.5)	
135				1,180 (31)	1,420 (36.5)	
Min. boom angle for indicated length (no load)	24°	32°	45°	25°	35°	45°
Max. boom length at 0° boom angle (no load)	90 ft.			90 ft.		

NOTE: ( ) Boom angles are in degrees. A6-829-100845A

#LMI operating code. Refer to LMI manual for instructions.
*This capacity based on maximum boom angle.
**29 ft. capacities are also applicable to fixed offsettable ext. However, the LMI codes will change to #0051, #0052 and #0053 for 0°, 25° and 45° offset, respectively

NOTES:

1. All capacities above the bold line are based on structural strength of boom extension.
2. 29 ft. and 51 ft. boom extension lengths may be used for single line lifting service.
3. Radii listed are for a fully extended boom with the boom extension erected. For main boom lengths less than fully extended, the rated loads are determined by boom angle. Use only the column which corresponds to the boom extension length and offset for which the machine is configured. For boom angles not shown, use the rating of the next lower boom angle.

   WARNING: Operation of this machine with heavier loads than the capacities listed is strictly prohibited. Machine tipping with boom extension occurs rapidly and without advance warning.
4. Boom angle is the angle above or below horizontal of the longitudinal axis of the boom base section after lifting rated load.
5. Capacities listed are with outriggers fully extended and vertical jacks set only.

ON RUBBER CAPACITIES

STATIONARY CAPACITIES
360°

Radius in Feet	#9005				
	Main Boom Length in Feet				
	33	40	50	60	70
10	38,550 (69.5)	38,550 (73.5)			
12	32,550 (65.5)	32,550 (70.5)	32,550 (75)		
15	23,700 (59.5)	23,700 (65.5)	23,700 (71)	23,700 (75)	
20	14,450 (47.5)	14,450 (57)	14,450 (64.5)	14,450 (69.5)	14,450 (73)
25	9,640 (32)	9,640 (47)	9,640 (58)	9,640 (64.5)	9,640 (68.5)
30		6,840 (34.5)	6,840 (50.5)	6,840 (58.5)	6,840 (64)
35			4,850 (41.5)	4,850 (52.5)	4,850 (59)
40	See Note 16		3,450 (30.5)	3,450 (46)	3,450 (54)
45				2,410 (38)	2,410 (48.5)
50				1,610 (28)	1,610 (42.5)
Min. boom angle (°) for indicated length (no load)					30
Max. boom length (ft.) at 0° boom angle (no load)					60

NOTE: ( ) Boom angles are in degrees.
#LMI operating code. Refer to LMI manual for operating instructions.

Lifting Capacities at Zero Degree Boom Angle On Rubber - 360°					
Boom Angle	Main Boom Length in Feet				
	33	40	50		
0°	7,580 (28.2)	4,850 (35)	2,410 (45)		

NOTE: ( ) Reference radii in feet. A6-829-100836B

STATIONARY CAPACITIES
DEFINED ARC OVER FRONT (See Note 3)

Radius in Feet	#9005				
	Main Boom Length in Feet				
	33	40	50	60	70
10	46,600 (69.5)	40,800 (73.5)	34,600 (77)		
12	40,800 (65.5)	40,800 (70.5)	34,600 (75)		
15	34,000 (59.5)	34,000 (65.5)	34,000 (71)	26,650 (75)	21,500 (77.5)
20	26,050 (47.5)	26,050 (57)	26,050 (64.5)	26,050 (69.5)	21,500 (73)
25	18,200 (32)	18,200 (47)	18,200 (58)	18,200 (64.5)	18,200 (68.5)
30		13,100 (34.5)	13,100 (50.5)	13,100 (58.5)	13,100 (64)
35			10,050 (41.5)	10,050 (52.5)	10,050 (59)
40	See Note 16		7,900 (30.5)	7,900 (46)	7,900 (54)
45				6,290 (38)	6,290 (48.5)
50				5,050 (28)	5,050 (42.5)
55					4,060 (35)
60					3,260 (26)
Min. boom angle (°) for indicated length (no load)					0
Max. boom length (ft.) at 0° boom angle (no load)					70

NOTE: ( ) Boom angles are in degrees.
#LMI operating code. Refer to LMI manual for operating instructions.

Lifting Capacities at Zero Degree Boom Angle On Rubber - Defined Arc Over Front					
Boom Angle	Main Boom Length in Feet				
	33	40	50	60	70
0°	14,550 (28.2)	10,050 (35)	6,290 (45)	4,060 (55)	2,590 (65)

NOTE: ( ) Reference radii in feet. A6-829-100835B

ON RUBBER CAPACITIES (cont'd.)

PICK & CARRY CAPACITIES (UP TO 2.5 MPH) - BOOM CENTERED OVER FRONT (See note 7)

Radius in Feet	#9006				
	Main Boom Length in Feet				
	33	40	50	60	70
10	30,150 (69.5)	30,150 (73.5)	17,850 (77)		
12	30,150 (65.5)	30,150 (70.5)	17,850 (75)		
15	29,650 (59.5)	29,650 (65.5)	17,850 (71)	17,850 (75)	14,750 (77.5)
20	22,650 (47.5)	22,650 (57)	17,850 (64.5)	17,850 (69.5)	14,750 (73)
25	17,850 (32)	17,850 (47)	17,850 (58)	17,850 (64.5)	14,750 (68.5)
30		13,100 (34.5)	13,100 (50.5)	13,100 (58.5)	13,100 (64)
35			10,050 (41.5)	10,050 (52.5)	10,050 (59)
40	See Note 16		7,340 (30.5)	7,340 (46)	7,340 (54)
45				6,020 (38)	6,020 (48.5)
50				4,940 (28)	4,940 (42.5)
55					4,030 (35)
60					3,260 (26)
Min. boom angle (°) for indicated length (no load)					0
Max. boom length (ft.) at 0° boom angle (no load)					70

NOTE: ( ) Boom angles are in degrees.
#LMI operating code. Refer to LMI manual for operating instructions.

Lifting Capacities at Zero Degree Boom Angle On Rubber - Pick & Carry					
Boom Angle	Main Boom Length in Feet				
	33	40	50	60	70
0°	14,550 (28.2)	10,050 (35)	6,020 (45)	4,030 (55)	2,590 (65)

NOTE: ( ) Reference radii in feet. A6-829-100837B

NOTES TO ALL RUBBER CAPACITY CHARTS:

1. Capacities are in pounds and do not exceed 75% of tipping loads as determined by test in accordance with SAE J765.
2. Capacities are applicable to machines equipped with 23.5x25 (20 ply) tires at 85 psi cold inflation pressure.
3. Defined Arc - Over front includes 6° on either side of longitudinal centerline of machine (ref. drawing C6-829-003529).
4. Capacities appearing above the bold line are based on structural strength and tipping should not be relied upon as a capacity limitation.
5. Capacities are applicable only with machine on firm level surface.
6. On rubber lifting with boom extensions not permitted.
7. For pick and carry operation, boom must be centered over front of machine, mechanical swing lock engaged and load restrained from swinging. When handling loads in the structural range with capacities close to maximum ratings, travel should be reduced to creep speeds.
8. Axle lockouts must be functioning when lifting on rubber.
9. All lifting depends on proper tire inflation, capacity and condition. Capacities must be reduced for lower tire inflation pressures. See lifting capacity chart for tire used. Damaged tires are hazardous to safe operation of crane.
10. Creep - not over 200 ft. of movement in any 30 minute period and not exceeding 1 mph.

RATED LIFTING CAPACITIES IN POUNDS
33 FT. - 105 FT. BOOM

ON OUTRIGGERS 50% EXTENDED (16 ft. SPREAD) - 360°

Radius in Feet	#4001								
	Main Boom Length in Feet								
	33	40	50	60	70	80	90	100	105
10	80,000 (69.5)	73,500 (73.5)	67,200 (77)						
12	77,750 (65.5)	69,500 (70.5)	62,300 (75)	*56,100 (78)					
15	67,300 (59.5)	65,550 (65.5)	57,300 (71)	51,800 (75)	45,200 (77.5)				
20	39,400 (47.5)	39,550 (57)	39,950 (64.5)	39,500 (69.5)	38,050 (73)	34,450 (75.5)	*31,400 (78)		
25	25,700 (32)	25,850 (47)	26,200 (58)	26,650 (64.5)	27,200 (68.5)	26,800 (72)	26,050 (74.5)	21,000 (76.5)	18,350 (77.5)
30		18,350 (34.5)	18,700 (50.5)	19,150 (58.5)	19,650 (64)	19,700 (68)	19,800 (71)	19,600 (73.5)	18,350 (74.5)
35			14,000 (41.5)	14,400 (52.5)	14,900 (59)	14,950 (64)	15,000 (67.5)	15,100 (70)	15,150 (71.5)
40	See Note 16		10,750 (30.5)	11,150 (46)	11,600 (54)	11,650 (59.5)	11,700 (64)	11,800 (67)	11,800 (68.5)
45				8,800 (38)	9,240 (48.5)	9,270 (55)	9,330 (60)	9,390 (64)	9,420 (65.5)
50				6,960 (28)	7,420 (42.5)	7,450 (50.5)	7,500 (56)	7,550 (60.5)	7,580 (62.5)
55					5,990 (35)	6,010 (45.5)	6,050 (52)	6,100 (57)	6,130 (59)
60					4,800 (26)	4,850 (39.5)	4,890 (47.5)	4,930 (53.5)	4,960 (55.5)
65						3,900 (33)	3,930 (42.5)	3,970 (49.5)	3,990 (52)
70						3,060 (24.5)	3,120 (37.5)	3,160 (45.5)	3,180 (48.5)
75							2,430 (31)	2,470 (40.5)	2,490 (44.5)
80							1,810 (23)	1,880 (35.5)	1,900 (40)
85								1,350 (29.5)	1,380 (35)
0.1A (lb.)	820	790	750	730	720	710	700	700	700
Minimum boom angle (°) for indicated length (no load)									0
Maximum boom length (ft.) at 0° boom angle (no load)									105

NOTE: ( ) Boom angles are in degrees.
#LMI operating code. Refer to LMI manual for operating instructions.
*This capacity is based on maximum boom angle.

Lifting Capacities at Zero Degree Boom Angle
On Outriggers 50% Extended - 360°

Boom Angle	Main Boom Length in Feet								
	33	40	50	60	70	80	90		
0°	16,250 (28.2)	12,500 (35)	8,280 (45)	5,460 (55)	3,800 (65)	2,340 (75)	1,270 (85)		

NOTE: ( ) Reference radii in feet.

A6-829-100833A

29 FT. - 51 FT. TELE BOOM EXTENSION

ON OUTRIGGERS 50% EXTENDED (16 ft. SPREAD) - 360°

Radius in Feet	**29 ft. LENGTH			51 ft. LENGTH		
	#4021	#4022	#4023	#4041	#4042	#4043
	0° OFFSET	25° OFFSET	45° OFFSET	0° OFFSET	25° OFFSET	45° OFFSET
30	*9,000 (78)					
35	9,000 (77)			*6,000 (78)		
40	9,000 (74.5)	8,000 (77.5)		6,000 (77)		
45	9,000 (72.5)	7,560 (76)	*5,660 (78)	6,000 (76)		
50	7,870 (70)	7,170 (74)	5,600 (76)	6,000 (74)		
55	6,530 (67.5)	6,820 (71.5)	5,500 (73.5)	6,000 (72)	*4,120 (78)	
60	5,410 (65)	6,320 (69)	5,300 (71)	6,000 (70)	3,900 (77)	
65	4,380 (62.5)	5,260 (66.5)	5,180 (68.5)	5,260 (68)	3,710 (75)	*2,740 (78)
70	3,490 (60)	4,260 (64)	4,810 (66)	4,460 (66)	3,530 (72.5)	2,660 (76.5)
75	2,730 (57.5)	3,410 (61.5)	3,880 (63)	3,770 (64)	3,370 (70.5)	2,580 (74)
80	2,070 (55)	2,670 (58.5)	3,050 (60.5)	3,140 (61.5)	3,220 (68.5)	2,520 (72)
85	1,500 (52)	2,030 (56)	2,330 (57.5)	2,550 (59.5)	3,080 (66)	2,460 (69.5)
90	1,000 (49)	1,470 (53)	1,700 (54)	2,030 (57)	2,960 (63.5)	2,410 (67)
95				1,570 (55)	2,500 (61.5)	2,360 (64.5)
100				1,160 (52.5)	1,980 (59)	2,330 (62)
105					1,510 (56)	1,840 (59)
110					1,080 (53.5)	1,320 (56)
0.1A	740	690	660	650	600	560
Min. boom angle for indicated length (no load)	42°	43°	53°	45°	46°	55°
Max. boom length at 0° boom angle (no load)	80 ft.			70 ft.		

NOTE: ( ) Boom angles are in degrees. A6-829-100846A

#LMI operating code. Refer to LMI manual for instructions.
*This capacity based on maximum boom angle.
**29 ft. capacities are also applicable to fixed offsettable ext. However, the LMI codes will change to #4051, #4052 and #4053 for 0°, 25° and 45° offset, respectively.

NOTES:

1. All capacities above the bold line are based on structural strength of boom extension.
2. 29 ft. and 51 ft. boom extension lengths may be used for single line lifting service.
3. Radii listed are for a fully extended boom with the boom extension erected. For main boom lengths less than fully extended, the rated loads are determined by boom angle. Use only the column which corresponds to the boom extension length and offset for which the machine is configured. For boom angles not shown, use the rating of the next lower boom angle.

   WARNING: Operation of this machine with heavier loads than the capacities listed is strictly prohibited. Machine tipping with boom extension occurs rapidly and without advance warning.
4. Boom angle is the angle above or below horizontal of the longitudinal axis of the boom base section after lifting rated load.
5. Capacities listed are with outriggers properly extended and vertical jacks set only.

RATED LIFTING CAPACITIES IN POUNDS
33 FT. - 105 FT. BOOM

ON OUTRIGGERS 0% EXTENDED (9 ft. 5.5 in. SPREAD) - 360°

Radius in Feet	#8001								
	Main Boom Length in Feet								
	33	40	50	60	70	80	90	100	105
10	60,000 (69.5)	57,100 (73.5)	53,300 (77)						
12	45,850 (65.5)	44,300 (70.5)	41,850 (75)	*39,650 (78)					
15	30,700 (59.5)	30,850 (65.5)	31,100 (71)	29,750 (75)	28,500 (77.5)				
20	18,300 (47.5)	18,400 (57)	18,750 (64.5)	19,150 (69.5)	19,550 (73)	18,900 (75.5)	*18,300 (78)		
25	12,050 (32)	12,150 (47)	12,450 (58)	12,850 (64.5)	13,300 (68.5)	13,350 (72)	13,450 (74.5)	13,050 (76.5)	12,900 (77.5)
30		8,360 (34.5)	8,660 (50.5)	9,050 (58.5)	9,480 (64)	9,540 (68)	9,620 (71)	9,710 (73.5)	9,760 (74.5)
35			6,110 (41.5)	6,490 (52.5)	6,910 (59)	6,960 (64)	7,030 (67.5)	7,110 (70)	7,150 (71.5)
40	See Note 16		4,280 (30.5)	4,660 (46)	5,080 (54)	5,120 (59.5)	5,180 (64)	5,240 (67)	5,280 (68.5)
45				3,290 (38)	3,700 (48.5)	3,730 (55)	3,780 (60)	3,840 (64)	3,870 (65.5)
50				2,190 (28)	2,620 (42.5)	2,650 (50.5)	2,690 (56)	2,740 (60.5)	2,770 (62.5)
55					1,760 (35)	1,780 (45.5)	1,820 (52)	1,870 (57)	1,890 (59)
60					1,030 (26)	1,070 (39.5)	1,110 (47.5)	1,150 (53.5)	1,170 (55.5)
0.1A (lb.)	820	790	750	730	720	710	700	700	700
Min. boom angle (°) for indicated length (no load)					0	24	36	44	47
Max. boom length (ft.) at 0° boom angle (no load)					70				

NOTE: ( ) Boom angles are in degrees.
#LMI operating code. Refer to LMI manual for operating instructions.
*This capacity is based on maximum boom angle.

Lifting Capacities at Zero Degree Boom Angle
On Outriggers 0% Extended - 360°

Boom Angle	Main Boom Length in Feet								
	33	40	50	60					
0°	9,260 (28.2)	5,680 (35)	2,810 (45)	1,270 (55)					

NOTE: ( ) Reference radii in feet.

A6-829-100834A

TIRE INFLATION - PSI (BAR)				
SIZE (FRONT & REAR)	LOAD RANGE	TRA CODE	LIFTING SERVICE AND GENERAL TRAVEL	EXTENDED TRAVEL
			STATIC, CREEP & 2.5 MPH (4.0 km/h)	
23.5x25	20 PR	E-3	85 (5.9)	85 (5.9)
23.5R25 GY	**	-----	80 (5.5)	80 (5.5)
23.5R25 Michelin	*	-----	75 (5.2)	75 (5.2)

Management of Change Procedure

Bennington BRF 1000 (16)

Management of Lift Plan Field Change

1. Purpose

   A lift plan document developed for the installation of structural steel comments for the above referenced bridge project a series of known lifts and lifting parameters. During the course of work, changes or modifications to the lift plan may be required or desired. This document address how these changes or modifications are reviewed, documented and subsequently incorporated into the Lift Plan.

2. Management of the Changes or Additions to the Lift Plan

   The Competent Person will be the lead person responsible for evaluating changes to the Lift Plan. In addition, the competent person will rely on input from the rigger/signal person and crane operator and if requried, the engineer. All persons involved in the review of changes to the lift plan will review and sign off on the Lift Plan Summary.

3. Lift Issues that need to be Addressed

   The Lift Plan includes a summary form that is utilized to identify how a lift will be categorized and the parameters that require evaluation. The Lift Plan Summary Form is included at the end of this section and evaluates the following parameters:

   - Identification of crane to be utilized
   - Identification of the item to be lifted including weight, lifting points, and lifting point rating
   - Identification of movement of lift, offload to setting locations
   - Identification of rigging required to facilitate the lift.
   - Evaluation of the total weight of the load, including rigging, crane blocks, and weight of item to be lifted.
   - Review of crane load charts to determine lift capability
   - Evaluation of crane setup location for desired lift, including bearing pressure and utility interference potential.
   - Determination of Critical Lift or Routine Lift

   3.1. Identification of Crane to Be Utilized

   The crane to be utilized is either the Grove RT650E or Link Belt LS138. The crane charts and initial layout have been identified in the base lift plan drawing package. It is most desirable to retain the base lift plan setup location because utility infrastructure interferences have been identified and cleared.

   3.2. Identification of Item to be Lifted

   The review of the Item to be lifted includes the weight of the item, lifting points and rating of lifting points. Wherever possible, a drawing depicting the item dimensions, lift points and rating of lift points should be provided for evaluation and is required for lifts that are determined to be a Critical Lift.

The movement of the load, from off-loading to setting will be identified and evaluated to determine load radius for crane and potential utility infrastructure interference (overhead lines, buildings, etc)

3.3. Rigging equipment available and certified is listed in the Lift Plan. The utilization of rigging from this list of equipment is most desirable.

3.4. The evaluation of the weight of the item is important to evaluating changes to the lift plan. The weight can be determined by certified scale, calculated, shipping manifest or manufactures data weight. In the event that the load requires calculation and load is determined to be a critical load, the engineer will be engaged to assist in the evaluation. The evaluation of the weight will also include the crane block and rigging, which is included in the Lift Plan. Rigging not included in the lift will be evaluation based on manufacturer's data available on-line.

3.5. The information attained to this point allows the evaluation of the lift including crane location and picking radius. Crane charts for both the Grove RT650E and Link Belt LS138 are included in the lift plan.

4. Reporting and Modification to the Lift Plan

All information developed as part of the evaluation of an unscheduled lift will reviewed by the competent person with the crane operator, rigger/signal person and engineer (as required) for signoff and be retained for incorporation into the Lift Plan.