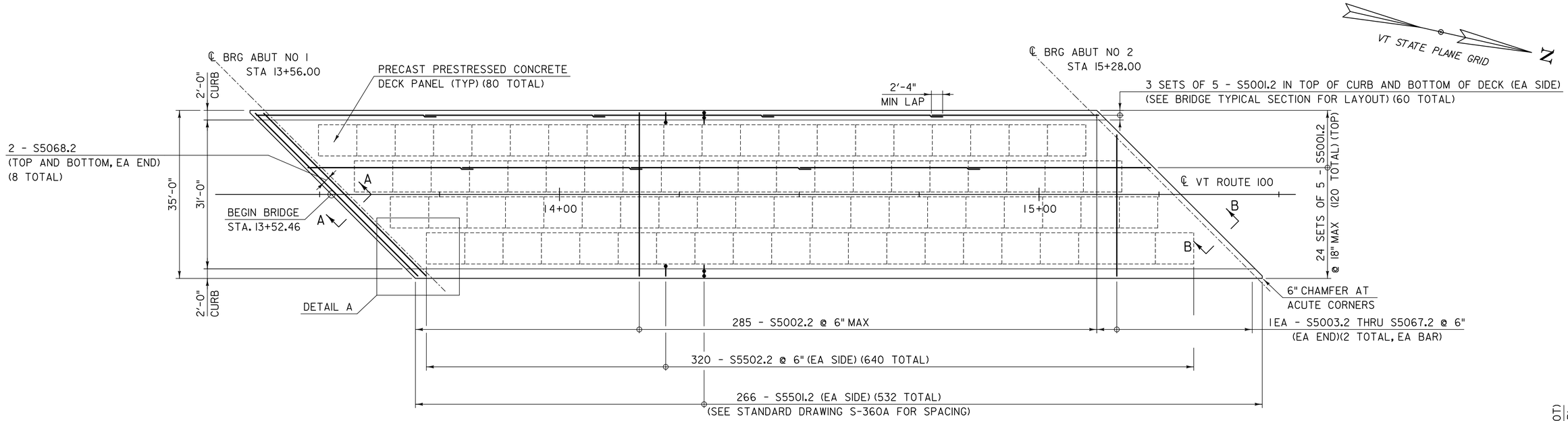

DECK PLAN

SCALE: 3/32" = 1'-0"

(BOTTOM MAT OF REINFOCEMENT AT END OF BRIDGE NOT SHOWN FOR CLARITY)

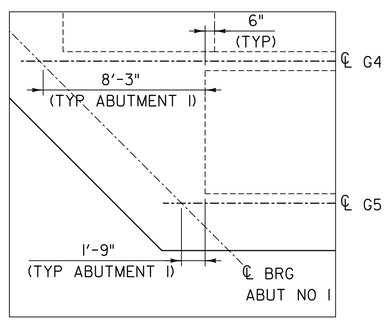

DETAIL A

SCALE: 1/4" = 1'-0"

(REINFORCEMENT NOT SHOWN FOR CLARITY)

SET A - 1EA - S5080.2 THRU S5089.2 @ 6"
(BOT) (1 SET EA END, OBTUSE CORNER)
(2 TOTAL, EA BAR)

SET B - 1EA - S5090.2 THRU S5104.2 @ 6"
(BOT) (2 SETS EA END) (4 TOTAL, EA BAR)

SET C - 1EA - S5105.2 THRU S5129.2 @ 6"
(BOT) (1 SET EA END, ACUTE CORNER)
(2 TOTAL, EA BAR)

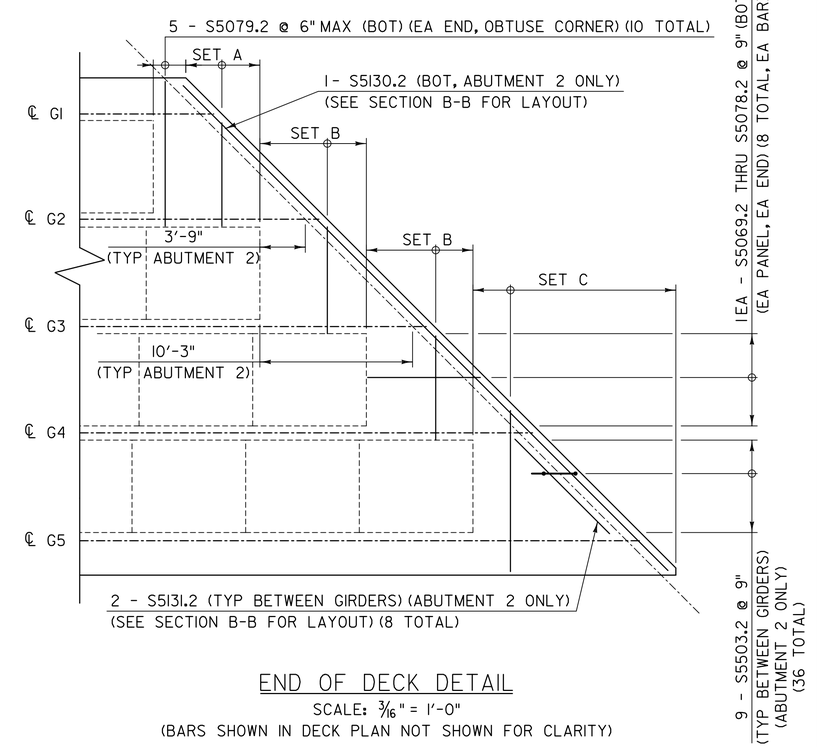

END OF DECK DETAIL

SCALE: 3/16" = 1'-0"

(BARS SHOWN IN DECK PLAN NOT SHOWN FOR CLARITY)

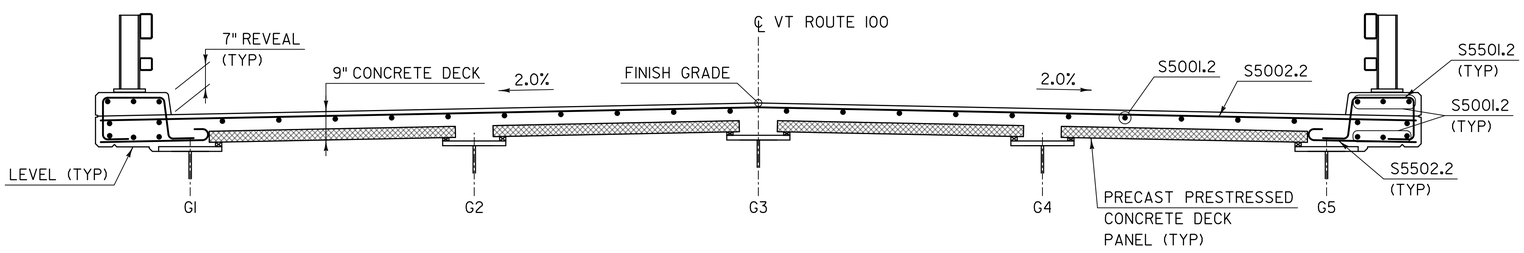

BRIDGE TYPICAL SECTION

SCALE: 1/2" = 1'-0"

NOTES:

1. SEE SHEET "SUPERSTRUCTURE DETAILS" FOR SECTION A-A AND B-B.
2. THE SURFACE OF THE BRIDGE DECK SHALL BE FINISHED WITH A TURF DRAG IN ACCORDANCE WITH SUBSECTION 501.16(d) AND LONGITUDINAL DECK GROOVING IN ACCORDANCE WITH SECTION 509.

PROJECT NAME: WAITSFIELD	
PROJECT NUMBER: BRF 013-4(39)	
T·Y·LIN INTERNATIONAL	
FILE NAME: z12b136supl.dgn	PLOT DATE: 12/18/2015
PROJECT LEADER: J. OLUND	DRAWN BY: S. MORGAN
DESIGNED BY: T. POULIN	CHECKED BY: J. OLUND
SUPERSTRUCTURE PLAN & DETAILS	SHEET 25 OF 69

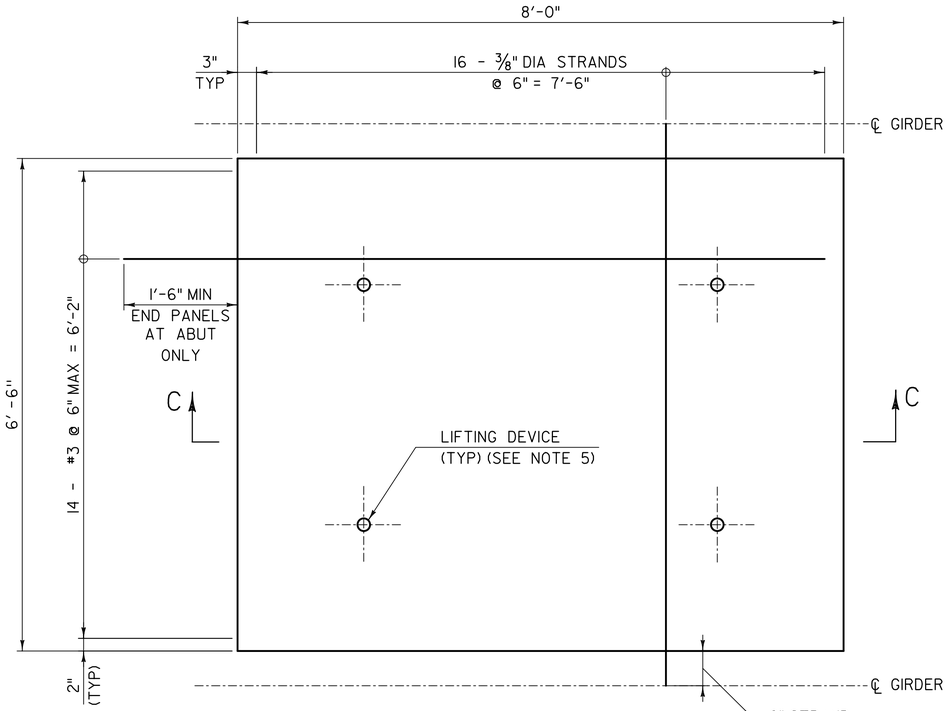

PRECAST PRESTRESSED CONCRETE DECK PANEL PLAN

SCALE: 1" = 1'-0"

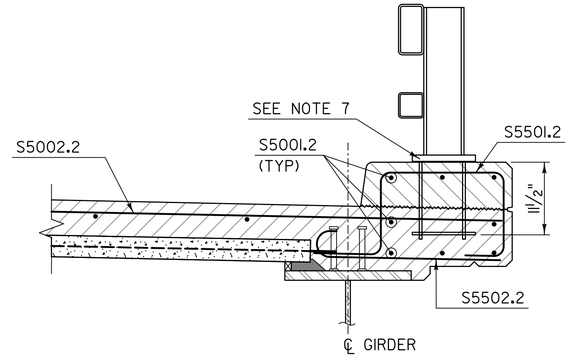

TYPICAL OVERHANG SECTION

SCALE: 1" = 1'-0"

NOTES:

1. PRECAST PRESTRESSED CONCRETE DECK PANELS SHALL BE FABRICATED IN ACCORDANCE WITH SECTION 510 OF THE STANDARD SPECIFICATIONS.
2. PRESTRESSING STRANDS SHALL BE GRADE 270 SEVEN - WIRE LOW RELAXATION STRANDS CONFORMING TO THE REQUIREMENTS OF AASHTO M203 (ASTM A416). INITIAL TENSION SHALL BE 17.2 KIPS PER STRAND.
3. DURING ERECTION, PRECAST PRESTRESSED CONCRETE DECK PANELS SHALL ALIGN VERTICALLY TO WITHIN 1/4 INCH.
4. PREFORMED JOINT FILLER, CLOSED-CELL FOAM SHALL BE CUT IN THE FIELD TO THE REQUIRED THICKNESS.
5. LIFTING DEVICE SELECTION AND DESIGN SHALL BE THE RESPONSIBILITY OF THE FABRICATOR.
6. OMIT TRANSVERSE NOTCH ON END PANELS AT ABUTMENTS.
7. THE RAIL POST ANCHORAGE DETAIL SHOWN ON STANDARD DRAWING S-360A SHALL BE MODIFIED BY LENGHTENING THE ANCHOR RODS 4 INCHES AND LOWERING THE EMBEDMENT LOCATION OF THE ANCHOR PLATE AS SHOWN IN THE TYPICAL OVERHANG SECTION, THIS SHEET.

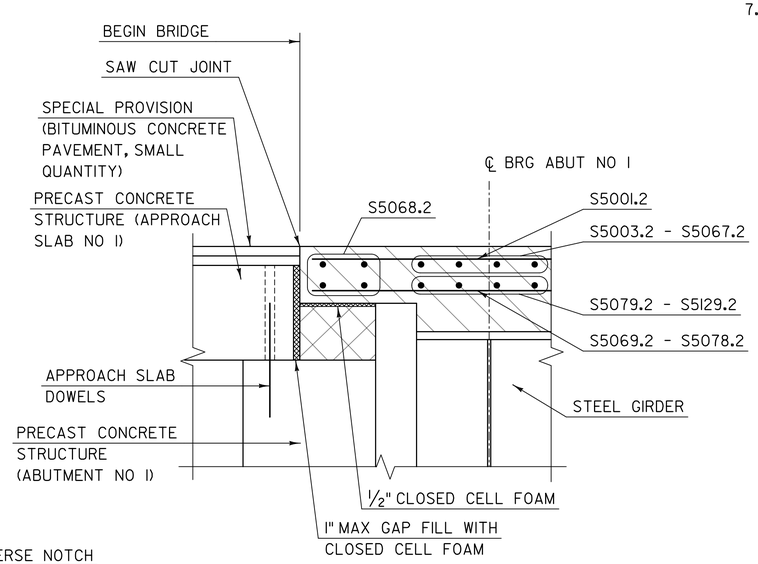

SECTION A-A

SCALE: 1" = 1'-0"

LEGEND:

- CONCRETE, HIGH PERFORMANCE CLASS A
- PRECAST PRESTRESSED CONCRETE DECK PANEL
- CONCRETE, HIGH PERFORMANCE CLASS AA
- SPECIAL PROVISION CONCRETE, HIGH PERFORMANCE RAPID SET

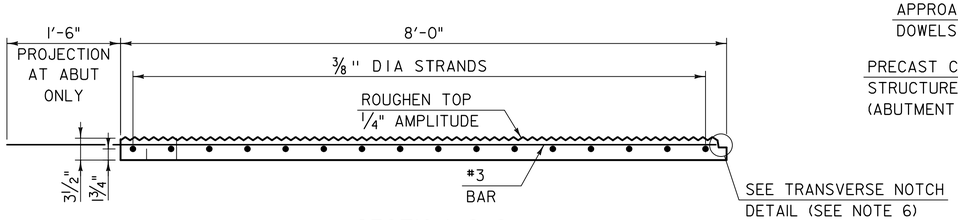

SECTION C-C

SCALE: 1" = 1'-0"

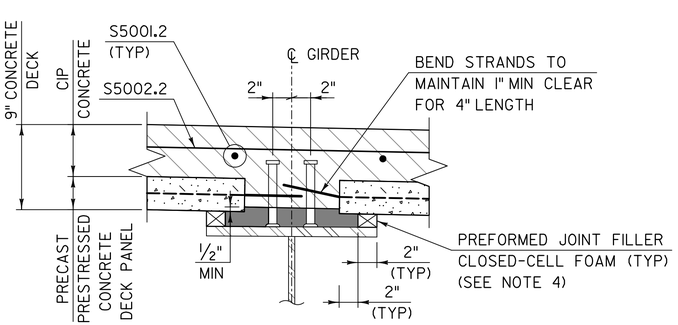

BLOCKING DETAIL

SCALE: 1 1/2" = 1'-0"

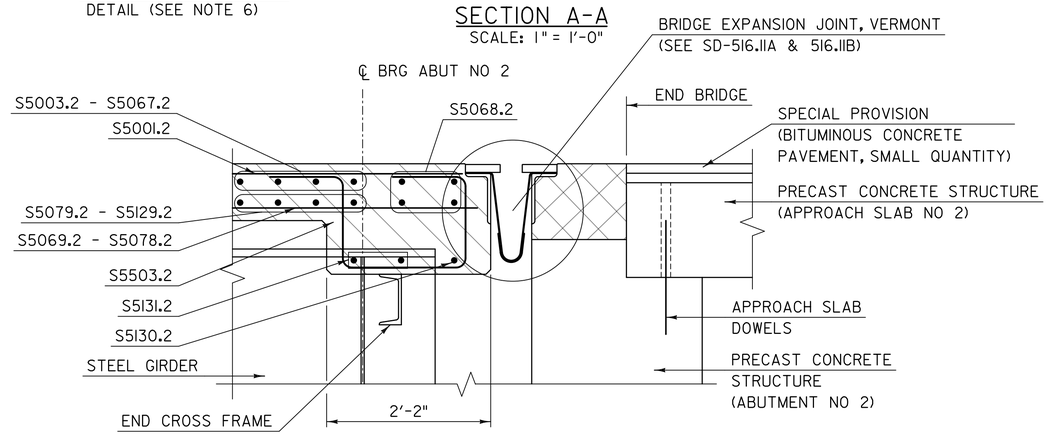

SECTION B-B

SCALE: 1" = 1'-0"

(VT JOINT HARDWARE NOT SHOWN FOR CLARITY)

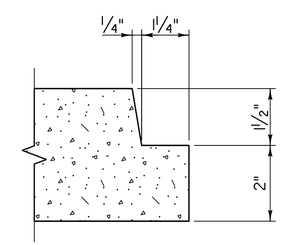

TRANSVERSE NOTCH DETAIL

NOT TO SCALE

PROJECT NAME: WAITSFIELD	
PROJECT NUMBER: BRF 013-4(39)	
T·Y·LIN INTERNATIONAL	FILE NAME: z12b136sup2.dgn PROJECT LEADER: J. OLUND DESIGNED BY: T. POULIN SUPERSTRUCTURE DETAILS
	PLOT DATE: 12/18/2015 DRAWN BY: S. MORGAN CHECKED BY: J. OLUND SHEET 26 OF 69

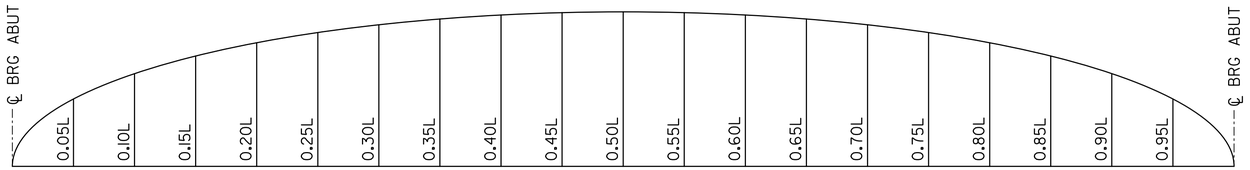

CAMBER DIAGRAM

NOT TO SCALE

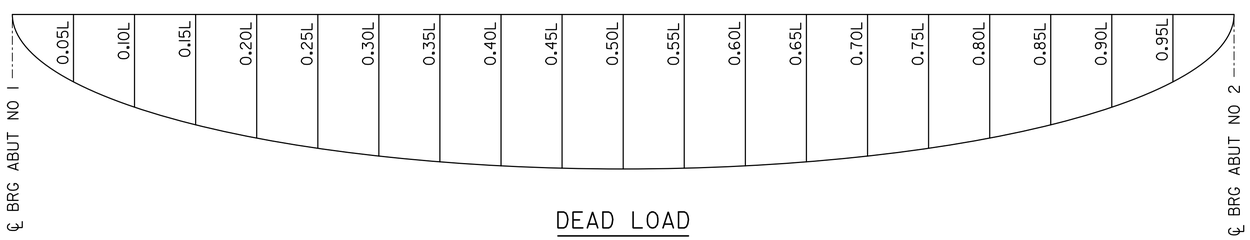

DEAD LOAD
DEFLECTION DIAGRAM

NOT TO SCALE

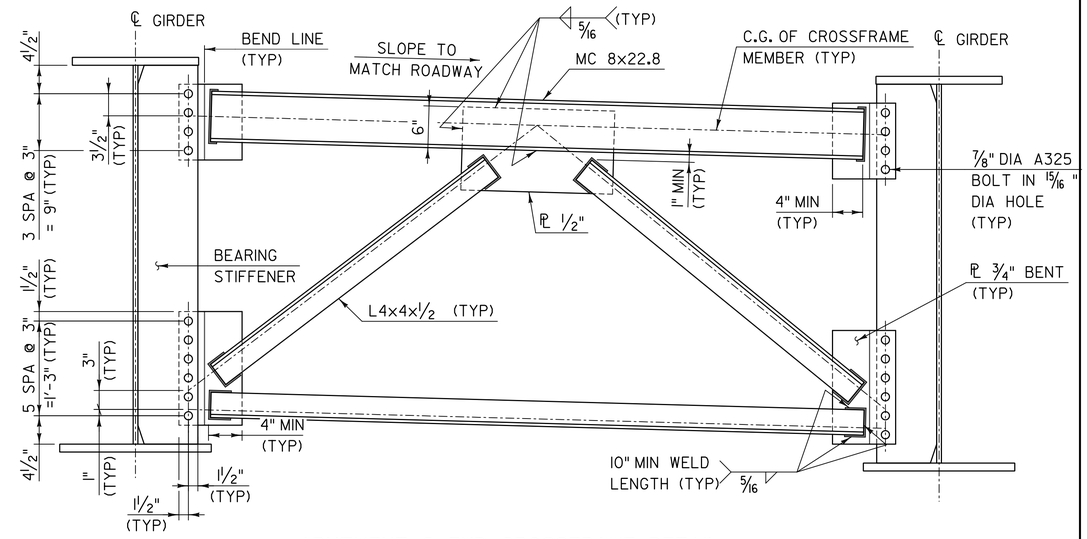

ABUTMENT 2 END CROSSFRAME DETAIL

SCALE: 1 1/2" = 1'-0"

GIRDER 1 & 5	CL BRG ABUT 1	.05L	.10L	.15L	.20L	.25L	.30L	.35L	.40L	.45L	.50L	.55L	.60L	.65L	.70L	.75L	.80L	.85L	.90L	.95L	CL BRG ABUT 2
STEEL DEFLECTION	0	9/16	1 1/8	1 5/8	2 1/8	2 1/2	2 7/8	3 1/8	3 5/16	3 7/16	3 1/2	3 7/16	3 5/16	3 1/8	2 7/8	2 1/2	2 1/8	1 5/8	1 1/8	9/16	0
SLAB & SDL DEFLECTION	0	1 5/16	2 1/2	3 5/8	4 11/16	5 9/16	6 5/16	6 15/16	7 3/8	7 5/8	7 11/16	7 5/8	7 3/8	6 15/16	6 5/16	5 9/16	4 11/16	3 5/8	2 1/2	1 5/16	0
TOTAL DEFLECTION	0	1 7/8	3 5/8	5 5/16	6 13/16	8 1/16	9 3/16	10 1/16	10 11/16	11 1/16	11 3/16	11 1/16	10 11/16	10 1/16	9 3/16	8 1/16	6 13/16	5 1/4	3 5/8	1 7/8	0
VERTICAL CURVE CAMBER	0	1 7/16	2 11/16	3 13/16	4 3/4	5 9/16	6 1/4	6 3/4	7 1/8	7 3/8	7 7/16	7 3/8	7 1/8	6 3/4	6 1/4	5 9/16	4 3/4	3 13/16	2 11/16	1 7/16	0
TOTAL CAMBER	0	3 1/4	6 5/16	9 1/16	11 9/16	13 5/8	15 7/16	16 13/16	17 13/16	18 7/16	18 5/8	18 7/16	17 13/16	16 13/16	15 7/16	13 5/8	11 9/16	9 1/16	6 5/16	3 1/4	0

GIRDER 2 - 4	CL BRG ABUT 1	.05L	.10L	.15L	.20L	.25L	.30L	.35L	.40L	.45L	.50L	.55L	.60L	.65L	.70L	.75L	.80L	.85L	.90L	.95L	CL BRG ABUT 2
STEEL DEFLECTION	0	5/8	1 3/16	1 11/16	2 3/16	2 5/8	3	3 1/4	3 7/16	3 9/16	3 5/8	3 9/16	3 7/16	3 1/4	3	2 5/8	2 3/16	1 11/16	1 3/16	5/8	0
SLAB & SDL DEFLECTION	0	1 3/8	2 5/8	3 7/8	4 15/16	5 15/16	6 11/16	7 3/8	7 13/16	8 1/8	8 3/16	8 1/8	7 13/16	7 3/8	6 11/16	5 15/16	4 15/16	3 7/8	2 5/8	1 3/8	0
TOTAL DEFLECTION	0	2	3 13/16	5 9/16	7 3/16	8 1/2	9 11/16	10 5/8	11 1/4	11 11/16	11 13/16	11 11/16	11 1/4	10 5/8	9 11/16	8 1/2	7 3/16	5 9/16	3 13/16	2	0
VERTICAL CURVE CAMBER	0	1 7/16	2 11/16	3 13/16	4 3/4	5 9/16	6 1/4	6 3/4	7 1/8	7 3/8	7 7/16	7 3/8	7 1/8	6 3/4	6 1/4	5 9/16	4 3/4	3 13/16	2 11/16	1 7/16	0
TOTAL CAMBER	0	3 3/8	6 1/2	9 3/8	11 15/16	14 1/8	15 15/16	17 3/8	18 7/16	19 1/16	19 1/4	19 1/16	18 7/16	17 3/8	15 15/16	14 1/8	11 15/16	9 5/16	6 1/2	3 3/8	0

NOTES:

1. CAMBER AND DEFLECTION VALUES ARE IN INCHES AND DO NOT INCLUDE FUTURE WEARING SURFACE.

PROJECT NAME: WAITSFIELD	
PROJECT NUMBER: BRF 013-4(39)	
T·Y·LIN INTERNATIONAL	FILE NAME: z12bl36sup3.dgn
	PROJECT LEADER: J. OLUND
	DESIGNED BY: J. OLUND
	CAMBER AND STEEL DETAILS
	PLOT DATE: 12/18/2015
	DRAWN BY: S. MORGAN
	CHECKED BY: T. POULIN
	SHEET 32 OF 69

STATE OF VERMONT
AGENCY OF TRANSPORTATION

REINFORCING STEEL SCHEDULE

ITEM	EACH	SIZE	LENGTH	MARK	TYPE	A	B	C	D	E	F	G	H	J	K	R	O
SUPERSTRUCTURE																	
	180	5	37'- 3"	S5001.2	STR												
	285	5	34'- 6"	S5002.2	STR												
	2	5	34'- 1"	S5003.2	STR												
	2	5	33'- 7"	S5004.2	STR												
	2	5	33'- 1"	S5005.2	STR												
	2	5	32'- 7"	S5006.2	STR												
	2	5	32'- 1"	S5007.2	STR												
	2	5	31'- 7"	S5008.2	STR												
	2	5	31'- 1"	S5009.2	STR												
	2	5	30'- 7"	S5010.2	STR												
	2	5	30'- 1"	S5011.2	STR												
	2	5	29'- 7"	S5012.2	STR												
	2	5	29'- 1"	S5013.2	STR												
	2	5	28'- 7"	S5014.2	STR												
	2	5	28'- 1"	S5015.2	STR												
	2	5	27'- 7"	S5016.2	STR												
	2	5	27'- 1"	S5017.2	STR												
	2	5	26'- 7"	S5018.2	STR												
	2	5	26'- 1"	S5019.2	STR												
	2	5	25'- 7"	S5020.2	STR												
	2	5	25'- 1"	S5021.2	STR												
	2	5	24'- 7"	S5022.2	STR												
	2	5	24'- 1"	S5023.2	STR												
	2	5	23'- 7"	S5024.2	STR												
	2	5	23'- 1"	S5025.2	STR												
	2	5	22'- 7"	S5026.2	STR												
	2	5	22'- 1"	S5027.2	STR												
	2	5	21'- 7"	S5028.2	STR												
	2	5	21'- 1"	S5029.2	STR												
	2	5	20'- 7"	S5030.2	STR												
	2	5	20'- 1"	S5031.2	STR												
	2	5	19'- 7"	S5032.2	STR												
	2	5	19'- 1"	S5033.2	STR												
	2	5	18'- 7"	S5034.2	STR												
	2	5	18'- 1"	S5035.2	STR												
	2	5	17'- 7"	S5036.2	STR												
	2	5	17'- 1"	S5037.2	STR												
	2	5	16'- 7"	S5038.2	STR												
	2	5	16'- 1"	S5039.2	STR												
	2	5	15'- 7"	S5040.2	STR												
	2	5	15'- 1"	S5041.2	STR												
	2	5	14'- 7"	S5042.2	STR												
	2	5	14'- 1"	S5043.2	STR												
	2	5	13'- 7"	S5044.2	STR												
	2	5	13'- 1"	S5045.2	STR												
	2	5	12'- 7"	S5046.2	STR												
	2	5	12'- 1"	S5047.2	STR												
	2	5	11'- 7"	S5048.2	STR												
	2	5	11'- 1"	S5049.2	STR												
	2	5	10'- 7"	S5050.2	STR												
	2	5	10'- 1"	S5051.2	STR												
	2	5	9'- 7"	S5052.2	STR												
	2	5	9'- 1"	S5053.2	STR												
	2	5	8'- 7"	S5054.2	STR												
	2	5	8'- 1"	S5055.2	STR												
	2	5	7'- 7"	S5056.2	STR												
	2	5	7'- 1"	S5057.2	STR												
	2	5	6'- 7"	S5058.2	STR												
	2	5	6'- 1"	S5059.2	STR												
	2	5	5'- 7"	S5060.2	STR												
✳	3	5	5'- 1"	S5061.2	STR												
	2	5	4'- 7"	S5062.2	STR												
	2	5	4'- 1"	S5063.2	STR												
	2	5	3'- 7"	S5064.2	STR												
	2	5	3'- 1"	S5065.2	STR												
	2	5	2'- 7"	S5066.2	STR												
	2	5	2'- 1"	S5067.2	STR												
	8	5	48'- 7"	S5068.2	STR												
	8	5	11'- 6"	S5069.2	STR												
	8	5	10'- 9"	S5070.2	STR												
	8	5	10'- 0"	S5071.2	STR												
	8	5	9'- 3"	S5072.2	STR												
	8	5	8'- 6"	S5073.2	STR												
	8	5	7'- 9"	S5074.2	STR												
	8	5	7'- 0"	S5075.2	STR												
	8	5	6'- 3"	S5076.2	STR												
	8	5	5'- 6"	S5077.2	STR												
	8	5	4'- 9"	S5078.2	STR												
	10	5	10'- 3"	S5079.2	STR												
	2	5	9'- 7"	S5080.2	STR												
	2	5	9'- 1"	S5081.2	STR												
	2	5	8'- 7"	S5082.2	STR												
	2	5	8'- 1"	S5083.2	STR												
	2	5	7'- 7"	S5084.2	STR												
	2	5	7'- 1"	S5085.2	STR												
	2	5	6'- 7"	S5086.2	STR												
	2	5	6'- 1"	S5087.2	STR												
	2	5	5'- 7"	S5088.2	STR												
	2	5	5'- 1"	S5089.2	STR												
	4	5	12'- 2"	S5090.2	STR												
	4	5	11'- 8"	S5091.2	STR												

ITEM	EACH	SIZE	LENGTH	MARK	TYPE	A	B	C	D	E	F	G	H	J	K	R	O
	4	5	11'- 2"	S5092.2	STR												
	4	5	10'- 8"	S5093.2	STR												
	4	5	10'- 2"	S5094.2	STR												
	4	5	9'- 8"	S5095.2	STR												
	4	5	9'- 2"	S5096.2	STR												
	4	5	8'- 8"	S5097.2	STR												
	4	5	8'- 2"	S5098.2	STR												
	4	5	7'- 8"	S5099.2	STR												
	4	5	7'- 2"	S5100.2	STR												
	4	5	6'- 8"	S5101.2	STR												
	4	5	6'- 2"	S5102.2	STR												
	4	5	5'- 8"	S5103.2	STR												
	4	5	5'- 2"	S5104.2	STR												
	2	5	13'- 11"	S5105.2	STR												
	2	5	13'- 5"	S5106.2	STR												
	2	5	12'- 11"	S5107.2	STR												
	2	5	12'- 5"	S5108.2	STR												
	2	5	11'- 11"	S5109.2	STR												
	2	5	11'- 5"	S5110.2	STR												
	2	5	10'- 11"	S5111.2	STR												
	2	5	10'- 5"	S5112.2	STR												
	2	5	9'- 11"	S5113.2	STR												
	2	5	9'- 5"	S5114.2	STR												
	2	5	8'- 11"	S5115.2	STR												
	2	5	8'- 5"	S5116.2	STR												
	2	5	7'- 11"	S5117.2	STR												
	2	5	7'- 5"	S5118.2	STR												
	2	5	6'- 11"	S5119.2	STR												
	2	5	6'- 5"	S5120.2	STR												
	2	5	5'- 11"	S5121.2	STR												
	2	5	5'- 5"	S5122.2	STR												
	2	5	4'- 11"	S5123.2	STR												
	2	5	4'- 5"	S5124.2	STR												
	2	5	3'- 11"	S5125.2	STR												
	2	5	3'- 5"	S5126.2	STR												
	2	5	2'- 11"	S5127.2	STR												
	2	5	2'- 5"	S5128.2	STR												
	2	5	1'- 11"	S5129.2	STR												
	1	5	42'- 1"	S5130.2	STR												
	8	5	10'- 3"	S5131.2	STR												
	532	5	5'- 0"	S5501.2	S5	0'- 10"	0'- 11"	1'- 6"	0'- 11"			0'- 10"					
	640	5	3'- 4"	S5502.2	1	0'- 7"	2'- 9"					0'- 0"					
	36	5	5'- 10"	S5503.2	S5	0'- 10"	0'- 11"	2'- 4"	0'- 11"			0'- 10"					

~ NOTES ~

1. UNLESS OTHERWISE DESIGNATED, ALL BAR REINFORCEMENT FOR CONCRETE IN SIZES UP TO AND INCLUDING NO. 18 SHALL CONFORM TO THE REQUIREMENTS OF THE "SPECIFICATIONS FOR DEFORMED BILLET-STEEL BARS FOR CONCRETE REINFORCEMENT", AASHTO M 31 (ASTM A 615-SI). ALL BARS SHALL BE GRADE 60, UNLESS OTHERWISE DESIGNATED.
2. FOR TYPICAL BENDING DETAILS, RECOMMENDED PIN DIAMETER "D" OF BENDS AND HOOKS, AND OTHER STANDARD PRACTICE, SEE CURRENT CONCRETE REINFORCING STEEL INSTITUTE "MANUAL OF STANDARD PRACTICE".
3. BARS WHICH REQUIRE MORE ACCURATE BENDING THAN STANDARD PRACTICES SHOULD HAVE LIMITS INDICATED.
4. ALL DIMENSIONS ARE OUT TO OUT OF BAR EXCEPT "A" AND "G" ON STANDARD 180 DEGREE AND 135 DEGREE HOOKS.
5. "J" DIMENSION ON 180 DEGREE HOOKS TO BE SHOWN ONLY WHERE NECESSARY TO RESTRICT HOOK SIZE. OTHERWISE, STANDARD HOOKS ARE TO BE USED.
6. "H" DIMENSION ON STIRRUPS TO BE SHOWN ONLY WHEN NECESSARY TO MAINTAIN CLEARANCES.
7. WHERE SLOPE DIFFERS FROM 45 DEGREES, DIMENSIONS "H" AND "K" MUST BE SHOWN.
8. ▲ DENOTES BARS TO BE CUT IN FIELD.
9. ✳ DENOTES ONE EXTRA BAR ADDED FOR TESTING PURPOSES.
10. △ DENOTES TWO EXTRA BARS ADDED FOR TESTING PURPOSES.
11. E IN BAR MARK PREFIX DENOTES EPOXY COATED REINFORCING STEEL.

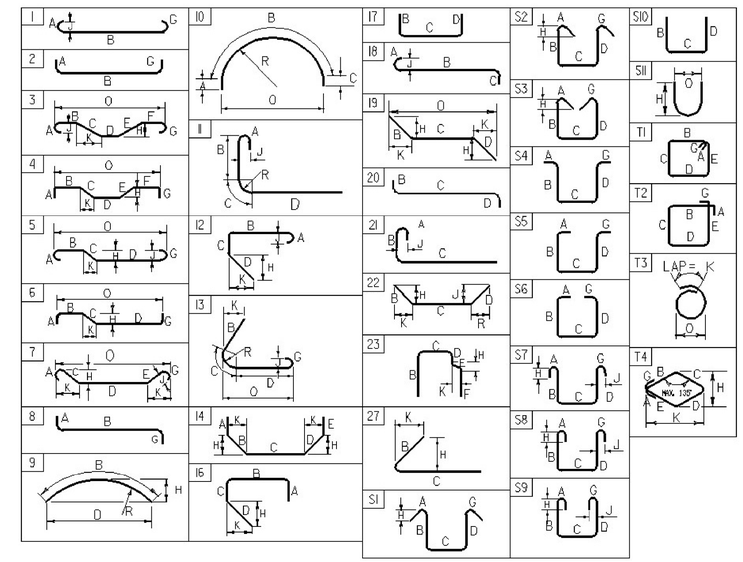

ASTM STANDARD REINFORCING BARS

BAR SIZE DESIGNATION	WEIGHT POUNDS PER FOOT	NOMINAL DIMENSIONS ROUND SECTION DIAMETER INCHES	AREA INCHES^2	PERIMETER INCHES
#3	0.376	0.375	0.11	1.178
#4	0.668	0.500	0.20	1.571
#5	1.043	0.625	0.31	1.963
#6	1.502	0.750	0.44	2.356
#7	2.044	0.875	0.60	2.749
#8	2.670	1.000	0.79	3.142
#9	3.400	1.128	1.00	3.544
#10	4.303	1.270	1.27	3.990
#11	5.313	1.410	1.56	4.430
#14	7.65	1.693	2.25	5.32
#18	13.60	2.257	4.00	7.09

PROJECT NAME: **WAITSFIELD**
PROJECT NUMBER: **BRF 013-4(39)**

FILE NAME: **z12b136rss.dgn** PLOT DATE: **12/18/2015**
PROJECT MANAGER: **J. OLUND** DRAWN BY: **T. POULIN**
DESIGNED BY: **T. POULIN** CHECKED BY: **B. TOOTHAKER**
REINFORCING STEEL SCHEDULE SHEET #2 SHEET **50A** OF **69**