Erection Plan Support Calculations
BRF-030-2(26)

Waitsfield, Vermont

CEE 38-mi-15

Rev 1 - 6-17-16
Steel Erection calculations added.

Prepared for:
A.L. St Onge Contractor, Inc

By:
Calderwood Engineering
June 6th, 2015

DEMAG AC 180 ↓

STAGE 2

SET FOOTINGS & WINGWALLS
WW1 CONTROLS 31.81 T = 63,620 lb
MAX RADIUS 59 ft
RATED LOAD = 65 000 lb
BOOM LENGTH = 98.1 ft

STAGE 3

SET BACKWALL
BW2 CONTROLS = 12.48 T = 24960 lb
MAX RADIUS = 85 ft
RATED LOAD = 39,400 lbs
BOOM LENGTH = 98.1 ft

STAGE 4

SET APPROACH SLAB
AS3 CONTROLS = 17.81 T = 35,620 lb
MAX RADIUS = 85 ft
RATED LOAD = 39,400 lb

GIRDER SET

WEIGHT = 50,755 lb
MAX RADIUS: 72 ft
RATED LOAD: 51,800 lb

HL-150 T ↓

STAGE 5

SET PILE CAPS & WW
PC3 CONTROLS 29.40 T = 58,800 lb
MAX RADIUS = 45 ft
RATED LOAD = 66,900 lb
BOOM LENGTH = 150 ft

FURTHEST AWAY PC5
W = 22.65 T = 45300 lb
MAX RADIUS = 50 ft
RATED LOAD = 57,100 lb
BOOM LENGTH = 150 ft

STAGE 6

SET BACKWALL
BW4 CONTROLS = 9.41 T = 18,820 lb
MAX RADIUS = 100 feet
RATED LOAD = 19,100 lb
BOOM LENGTH = 150 ft

STAGE 7

SET APPROACH SLABS
AS3 CONTROLS = 17.81 T = 35620 lb
MAX RADIUS = 60 feet
RATED LOAD = 43,200 lb
BOOM LENGTH = 150 ft

GIRDER SET

WEIGHT = 19,075 lb
MAX RADIUS = 90 ft
RATED LOAD = 22,900 lb

COUNTER WEIGHTS: 6000 lbs @ 84.92'
20750 lbs @ 77.04'
8750 lbs @ 74.92'

HL-150T : 1.021 K/ft
BOOM : 63.5 lb/ft

NOTE: HL-150T w/ 150ft BOOM IS RATED FOR 66,900 lb @ RADIUS 45ft

WORST LOAD CASE : MAX RADIUS : 45ft
LOAD : 58,800 lb

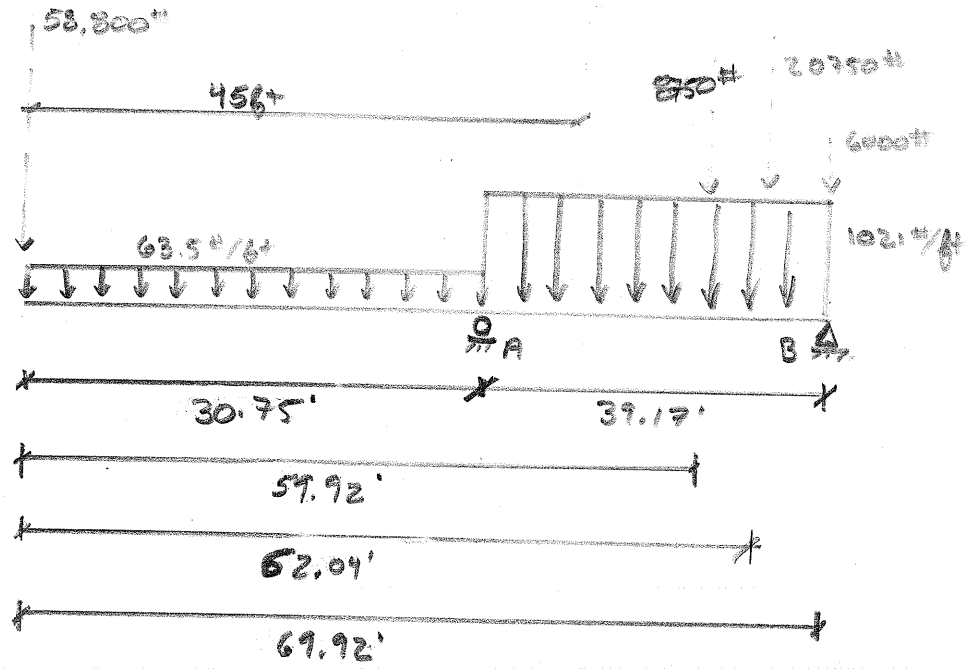

SUPPORT A : 134000 lb ← CONTROLS *CALCS DONE ON BEAMBOY
SUPPORT B : 2140 lb

P = 134 K

SEE PAGE 10

42-381 50 SHEETS EYE-EASE® - 5 SQUARES
42-382 100 SHEETS EYE-EASE® - 5 SQUARES
42-389 200 SHEETS EYE-EASE® - 5 SQUARES
National® Brand

CHECK CRANE MAT CAPACITY FOR HL-1507 LOADED @ MAX RADIUS

ASSUMPTIONS & KNOWNS

- USE CRANE MATS TO DISTRIBUTE LOAD
- ASSUME (4) 4' × 12' × 8" CRANE MATS STACKED
- MOST LOADED OUTRIGGER : P = 134k FROM BEAMBOY

(D) DEPTH: 2'8"
(B) BASE: 4'
(L) LENGTH: 12'

γ_{WOOD} = 50 pcf DENSE HARDWOOD
W_{ALLOW} = 5 ksf → STANDARD SPECIFICATIONS FOR HIGHWAY BRIDGES TABLE 4.11.4.1.4-1

$P_{DEAD} = D \cdot B \cdot L \cdot \gamma_{WOOD}$
$= (2'8")(4')(12')(50\,pcf)$
$= 6.4$ kip

$$w = \frac{(P + P_{dead})}{(L \cdot B)} = \frac{(134k + 6.4k)}{(12' \cdot 4')} = 2.925\,ksf$$

$$FS: \frac{W_{ALLOW}}{w} = \frac{5\,ksf}{2.07\,ksf} = \underline{1.62} \quad OK \checkmark$$

CHECK CRANE MAT MOMENT CAPACITY
MODEL AS A CANTILEVER SUPPORT @ CENTER OF CRANE MAT
ANALYZE ON A PER FOOT BASIS

$$M_B = w \cdot \frac{L}{2} \cdot \frac{\left(\frac{L}{2}\right)}{2} \cdot 1\,ft$$

$$= (2.925\,ksf) \cdot \left(\frac{12'}{2}\right) \cdot \frac{(12'/2)}{2} \cdot 1\,ft$$

$= 52.65$ ft·k
$M_B = 631.8$ in·k

CALCULATE CAPACITY (REF NATIONAL DESIGN SPECIFICATIONS FOR WOOD CONSTRUCTION) ← NDS

F_b = 1150 psi ← MIXED OAK No. 1, NDS SUPPLEMENT TABLE 4D
C_D = 1.25 ← NDS TABLE 2.3.2 FOR CONSTRUCTION LOADS
C_m = 1.0
C_t = 1.0 ← NDS TABLE 2.3.3
C_L = 1.0 ← NDS 3.3.3
C_F = 1.0 ← NDS 4.3.6
C_{fu} = 1.0
C_i = 1.0
C_r = 1.0

$F'_b = F_b \cdot C_D \cdot C_m \cdot C_t \cdot C_L \cdot C_F \cdot C_r$
$F'_b = (1150\,psi)(1.25)$
$F'_b = 1437.5$ psi

NEXT PAGE ⇒

$B = 1ft$ ← B/C ANALYZING ON PER FOOT BASIS
$H = 8''$

$S_x = 4 \cdot \frac{BH^2}{6}$ (4) MATS STACKED ON TOP OF EACH OTHER

$= \frac{4(1ft)(.667ft)^2}{6}$

$S_x = .296ft^3 = 511.5 in^3$

$M_y = S_x \cdot F'_b$
$M_y = (511.5 in^3)(1437.5 psi)$
$M_y = 735.264 k \cdot in$

$FS = \frac{M_y}{M} = \frac{735.264 k \cdot in}{667.49 k \cdot in} = 1.1$ OK ✓

$\boxed{\text{USE (4) 4'x12'x8" CRANE MATS}}$

42-381 50 SHEETS EYE-EASE® - 5 SQUARES
42-382 100 SHEETS EYE-EASE® - 5 SQUARES
42-389 200 SHEETS EYE-EASE® - 5 SQUARES
National® Brand

Grove HL 150

76A BOOM – ON OUTRIGGERS 360°
85% STABILITY

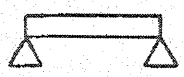

CAPACITY IN POUNDS
WITH A C + L COUNTERWEIGHTS

BOOM LGTH	LOAD RAD	BOOM ANG	SHEAVE HGT	RATED LOAD
40	12	82.7	47.1	300,000
40	13	81.3	46.9	294,500
40	14	79.8	46.6	272,900
40	15	78.3	46.3	254,300
40	16	76.8	46.0	237,800
40	17	75.3	45.7	223,400
40	18	73.8	45.3	210,500
40	19	72.2	44.9	199,100
40	20	70.7	44.5	188,700
40	25	62.6	41.8	149,300
40	30	53.7	38.1	122,900
40	35	43.4	32.9	99,500
40	40	29.9	24.9	81,000
50	13	83.0	57.0	293,800
50	14	81.9	56.9	272,100
50	15	80.7	56.6	253,500
50	16	79.5	56.4	237,000
50	17	78.3	56.1	222,600
50	18	77.1	55.8	209,700
50	19	75.9	55.5	198,300
50	20	74.7	55.2	187,900
50	25	68.6	53.2	148,500
50	30	62.1	50.5	122,200
50	35	55.1	46.9	99,700
50	40	47.3	42.4	81,100
50	45	38.2	36.2	67,900
50	50	26.2	27.0	58,000
60	15	82.3	66.8	253,100
60	16	81.3	66.6	236,600
60	17	80.3	66.4	222,300
60	18	79.3	66.2	209,300
60	19	78.4	65.9	197,900
60	20	77.4	65.7	187,500
60	25	72.3	64.0	148,100
60	30	67.2	61.8	121,900
60	35	61.7	59.1	99,900
60	40	55.9	55.7	81,300
60	45	49.7	51.5	68,100
60	50	42.7	46.1	58,300
60	60	23.6	28.8	44,500
70	17	81.7	76.6	222,000
70	18	80.9	76.4	209,100
70	19	80.1	76.2	197,700
70	20	79.2	76.0	187,300
70	25	75.0	74.6	147,900
70	30	70.6	72.8	121,700
70	35	66.1	70.5	100,000
70	40	61.5	67.8	81,400
70	45	56.6	64.4	68,200
70	50	51.3	60.4	58,400
70	60	39.2	49.5	44,700
70	70	21.6	30.5	35,500

BOOM LGTH	LOAD RAD	BOOM ANG	SHEAVE HGT	RATED LOAD
80	18	82.0	86.6	208,600
80	19	81.3	86.4	197,200
80	20	80.6	86.2	186,800
80	25	76.9	85.0	147,400
80	30	73.2	83.4	121,200
80	35	69.3	81.5	100,000
80	40	65.4	79.2	81,300
80	45	61.3	76.4	68,100
80	50	57.0	73.1	58,300
80	60	47.7	64.7	44,600
80	70	36.4	52.7	35,400
80	80	20.0	32.1	28,900
90	19	82.3	96.6	197,000
90	20	81.6	96.4	186,600
90	25	78.4	95.3	147,400
90	30	75.1	93.9	121,100
90	35	71.7	92.3	100,000
90	40	68.3	90.2	81,400
90	45	64.8	87.8	68,100
90	50	61.1	85.1	58,400
90	60	53.4	78.1	44,700
90	70	44.7	68.8	35,600
90	80	34.2	55.7	29,200
90	90	18.7	33.6	24,200
100	21	81.9	106.4	176,900
100	25	79.6	105.6	147,000
100	30	76.6	104.3	120,600
100	35	73.6	102.8	100,000
100	40	70.6	101.1	81,300
100	45	67.5	98.9	68,000
100	50	64.3	96.5	58,200
100	60	57.6	90.5	44,400
100	70	50.4	82.8	35,300
100	80	42.2	72.5	29,000
100	90	32.3	58.5	24,100
100	100	17.6	35.0	20,200
110	24	81.1	116.0	152,900
110	25	80.5	115.8	146,500
110	30	77.9	114.7	120,200
110	35	75.2	113.3	99,800
110	40	72.4	111.7	81,100
110	45	69.7	109.8	67,800
110	50	66.8	107.7	58,000
110	60	60.9	102.4	44,200
110	70	54.7	95.7	35,100
110	80	47.8	87.1	28,800
110	90	40.1	76.1	23,900
110	100	30.6	61.1	20,100
110	110	16.7	36.3	17,000
120	26	80.8	125.8	139,900
120	30	78.9	124.9	119,600
120	35	76.4	123.7	99,700

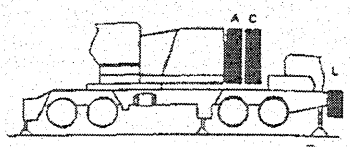

COUNTERWEIGHT CONFIGURATION

BOOM LGTH	LOAD RAD	BOOM ANG	SHEAVE HGT	RATED LOAD
120	40	74.0	122.2	81,000
120	45	71.4	120.5	67,600
120	50	68.9	118.6	57,800
120	60	63.6	113.8	44,000
120	70	58.0	107.9	34,800
120	80	52.1	100.5	28,500
120	90	45.6	91.3	23,600
120	100	38.2	79.5	19,800
120	110	29.2	63.6	16,700
120	120	15.9	37.6	14,200
130	27	81.1	135.8	134,000
130	30	79.8	135.2	119,300
130	35	77.5	134.0	99,500
130	40	75.2	132.7	80,800
130	45	72.9	131.1	67,400
130	50	70.6	129.3	57,600
130	60	65.8	125.0	43,800
130	70	60.8	119.7	34,700
130	80	55.5	113.1	28,300
130	90	49.9	105.1	23,500
130	100	43.7	95.2	19,700
130	110	36.6	82.7	16,700
130	120	28.0	66.0	14,200
130	130	15.2	38.8	12,000
140	29	80.9	145.5	123,400
140	30	80.5	145.4	118,800
140	35	78.4	144.3	99,400
140	40	76.3	143.1	80,600
140	45	74.2	141.6	67,200
140	50	72.0	140.0	57,400
140	60	67.6	136.0	43,500
140	70	63.1	131.2	34,400
140	80	58.3	125.2	28,000
140	90	53.3	118.1	23,100
140	100	47.9	109.5	19,400
140	110	42.0	99.0	16,300
140	120	35.2	85.8	13,800
140	130	26.9	68.3	11,700
140	140	14.6	40.0	10,000
150	30	81.1	155.5	118,300
150	35	79.2	154.5	99,200
150	40	77.2	153.4	80,400
150	45	75.3	152.1	66,900
150	50	73.3	150.5	57,100
150	60	69.2	146.9	43,200
150	70	65.0	142.4	34,100
150	80	60.7	137.0	27,700
150	90	56.1	130.5	22,900
150	100	51.3	122.9	19,100
150	110	46.1	113.7	16,000
150	120	40.4	102.6	13,500
150	130	33.9	88.8	11,500
150	140	26.0	70.5	9,700
150	150	14.1	41.1	8,200

RATED LOADS APPEARING IN SHADED AREAS ARE BASED ON STRUCTURAL OR OTHER FACTORS RATHER THAN STABILITY.

READ AND UNDERSTAND LIFTING CAPACITY NOTES ON A6-829-800214 LOCATED IN THE FRONT OF THIS MANUAL BEFORE OPERATING THIS MACHINE.

SERIAL NUMBER

HL150T
IDENTIFICATION

COUNTER WEIGHT: 141 K / 2 = 70.5 K

CRANE: $\frac{132,300\ lb}{39.2\ ft} \cdot \frac{1}{2} = 1687.5\ lb/ft$

BOOM: 150 lb/ft

WORST LOAD CASE:
MAX RADIUS: 59 ft
LOAD: 63.6 K

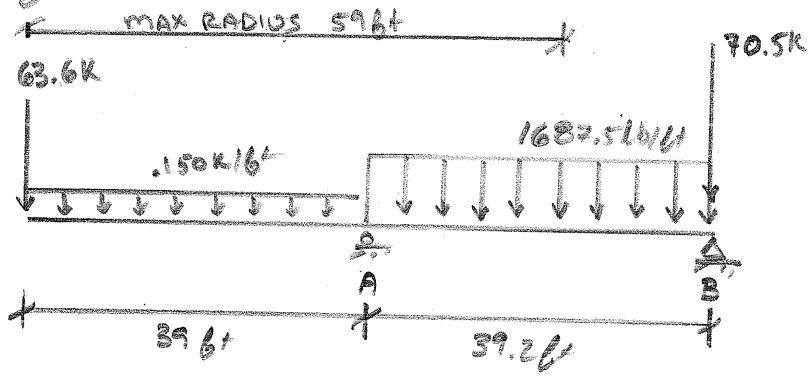

SUPPORT A: 169000 lb
SUPPORT B: 37400 lb

$\boxed{P = 169K}$ ✓ SEE PAGE 11

NOTE: DEMAG AC180 W/ 98.1 ft BOOM IS RATED FOR A LOAD OF 65 K @ 59'

CHECK CRANE MAT CAPACITY FOR DEMAG AC 180 LOADED @ MAX RADIUS

ASSUMPTIONS & KNOWNS

- USE CRANE MATS TO DISTRIBUTE LOAD
- ASSUME (5) 4' x 12' x 8" CRANE MATS STACKED
- MOST LOADED OUTRIGGER: P = 169K FROM BEAMBOY

(D) DEPTH: 3'4"
(B) BASE: 4'
(L) LENGTH: 12'

$\gamma_{WOOD} = 50\ pcf$ → DENSE HARDWOOD
$w_{ALLOW} = 5\ ksf$ → STANDARD SPECIFICATIONS FOR HIGHWAY BRIDGES TABLE 4.11.4.1.4-1

$$P_{DEAD} = (D \cdot B \cdot L)\,\gamma_{WOOD}$$
$$= (3'4" \cdot 4' \cdot 12')(50\ pcf)$$
$$= 8000\ lbs$$

$$w = \frac{(P + P_{DEAD})}{(L \cdot B)}$$
$$= \frac{(169K + 8000\ lb)}{(12' \cdot 4')}$$
$$= 3.6875\ ksf$$

$$F.S = \frac{w_{ALLOW}}{w} = \frac{5\ ksf}{3.7\ ksf} = 1.36\ OK\ ✓$$

CHECK CRANE MAT MOMENT CAPACITY

MODEL AS A CANTILEVER SUPPORT @ CENTER OF CRANE MAT
ANALYZE ON A PER FOOT BASIS

$$M_B = w \cdot \frac{L}{2} \cdot \frac{\left(\frac{L}{2}\right)}{2} \cdot 1ft$$

$$M_B = (3.6875\,kif) \cdot \left(\frac{12ft}{2}\right) \cdot \frac{\left(\frac{12ft}{2}\right)}{2} \cdot 1ft$$

$$M_B = 796.5\ in \cdot K$$

CALCULATE CAPACITY (REF NATIONAL DESIGN SPECIFICATIONS FOR WOOD CONSTRUCTION) ← NDS

$F_b = 1150\ psi$ ← MIXED OAK No. 1 NDS SUPPLEMENT TABLE 4D
$C_D = 1.25$ ← NDS TABLE 2.3.2 FOR CONSTRUCTION LOADS
$C_m = 1.0$
$C_t = 1.0$ ← NDS TABLE 2.3.3
$C_L = 1.0$
$C_F = 1.0$
$C_{fu} = 1.0$
$C_i = 1.0$
$C_r = 1.0$

$F'_b = F_b \cdot C_D \cdot C_m \cdot C_t \cdot C_L \cdot C_F \cdot C_r$
$F'_b = (1150\ psi)(1.25)$
$F'_b = 1437.5\ psi$

$B = 1ft$ ← B/C ANALYZING ON PER FOOT BASIS
$H = 8''$

$$S_x = 5 \cdot \frac{BH^2}{6} = 5 \cdot \frac{(1)(8'')^2}{6} = .37\ ft^3$$

$M_y = S_x \cdot F'_b$
$M_y = (.37ft^3)(1437.5\ psi)$
$M_y = 920\ in \cdot K$

$$FS = \frac{M_y}{M_B} = \frac{920\ in \cdot K}{796.5\ in \cdot K} = 1.16 \quad OK \checkmark$$

USE (5) 4'×12'×8" CRANE MATS

Lifting capacities main boom

Demag AC 180

141,000 lb 360° **85%**

Radius	48.2 ft**	48.2 ft	65.6 ft	81.7 ft	98.1 ft	114.8 ft	114.8 ft	131.6 ft	148.0 ft	164.7 ft	181.1 ft	197.0 ft
	Main boom											
ft	1,000 lb											
10	400.0[1]	338.0	294.0	208.0	–	–	–	–	–	–	–	–
11	375.0[1]	321.0	290.0	203.0	–	–	–	–	–	–	–	–
13	333.0[1]	290.0	282.0	195.5	–	–	–	–	–	–	–	–
15	300.0[1]	264.0	263.0	185.0	146.5	–	–	–	–	–	–	–
16	285.0[1]	253.0	251.0	180.0	143.5	–	–	–	–	–	–	–
19	241.0	224.0	224.0	167.0	135.0	125.5	109.0	–	–	–	–	–
23	198.0	193.5	192.0	150.5	124.0	111.0	101.0	98.0	–	–	–	–
26	175.5	175.5	174.0	140.5	117.0	102.0	96.0	91.5	83.0	–	–	–
29	159.0	159.0	159.0	131.5	110.0	94.5	91.0	85.5	78.0	64.5	–	–
33	142.0	142.0	141.0	120.5	102.0	85.5	85.5	79.0	71.0	61.5	50.5	39.6
39	–	–	118.0	105.5	91.0	74.5	76.5	68.5	64.0	56.7	46.5	38.8
46	–	–	95.5	92.0	80.0	63.5	68.0	60.0	56.1	51.5	42.5	37.6
52	–	–	82.5	81.0	72.0	56.5	62.0	53.2	50.3	47.3	39.4	36.0
59	–	–	–	68.0	65.0	49.6	56.0	46.7	44.5	42.8	36.1	33.3
65	–	–	–	59.1	59.8	44.6	51.4	42.3	40.5	39.1	33.7	30.8
72	–	–	–	–	51.8	39.8	47.0	38.0	36.4	35.5	31.1	28.0
79	–	–	–	–	44.5	35.8	43.3	34.0	32.9	32.2	29.0	25.7
85	–	–	–	–	39.4	32.7	40.6	31.2	30.1	29.6	27.2	23.6
92	–	–	–	–	–	29.7	36.7	28.1	27.2	27.0	25.3	21.5
98	–	–	–	–	–	27.7	33.1	25.9	25.2	25.0	23.9	20.1
105	–	–	–	–	–	–	–	23.5	22.9	22.9	22.2	18.2
111	–	–	–	–	–	–	–	21.9	21.3	21.3	20.8	17.0
118	–	–	–	–	–	–	–	–	19.4	19.4	19.4	15.6
124	–	–	–	–	–	–	–	–	18.0	18.2	18.0	14.6
131	–	–	–	–	–	–	–	–	16.1	16.8	16.7	13.4
138	–	–	–	–	–	–	–	–	–	15.3	15.3	12.5
144	–	–	–	–	–	–	–	–	–	14.3	14.3	11.7
151	–	–	–	–	–	–	–	–	–	–	13.4	10.7
157	–	–	–	–	–	–	–	–	–	–	12.6	9.9
164	–	–	–	–	–	–	–	–	–	–	11.4	9.2
170	–	–	–	–	–	–	–	–	–	–	–	8.4
177	–	–	–	–	–	–	–	–	–	–	–	7.5

Boom extension sequence in %

Tele 1	0	0	23	45	45	90	45	90	90	90	90	100
Tele 2	0	0	23	45	45	90	45	90	90	90	90	100
Tele 3	0	0	0	0	45	0	45	45	90	90	90	100
Tele 4	0	0	0	0	0	0	45	0	0	45	90	100

Remarks

** special equipment required

[1] only 0° over rear

CALDERWOOD ENGINEERING ETC, LLC
222 RIVER ROAD
RICHMOND, ME 04357
PH. (207) 737-2007 FAX (207) 737-2008
www.calderwoodengineering.com

CRANE MAT CALCS FOR GIRDER PICK-UPS

CROSS-SECTION 1

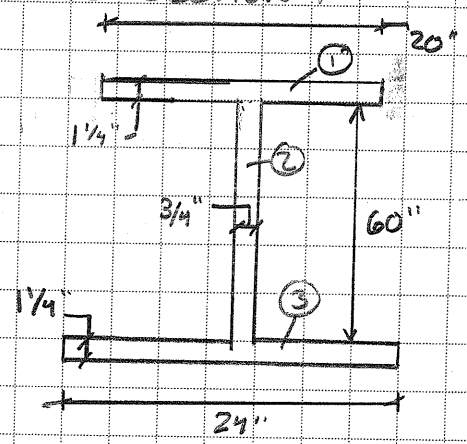

AREA
1). (1¼")(20")
2). (¾")(60")
3). (1¼")(24")
Σ 100 in²

DENSITY OF STL:
.284 lb/in³

DEAD LOAD:
= 100 in² · .284 lb/in³
= 28.40 lb·in
= 340.80 plf

FACTOR LOAD UP BY 10% = 375 plf

CROSS SECTION 2

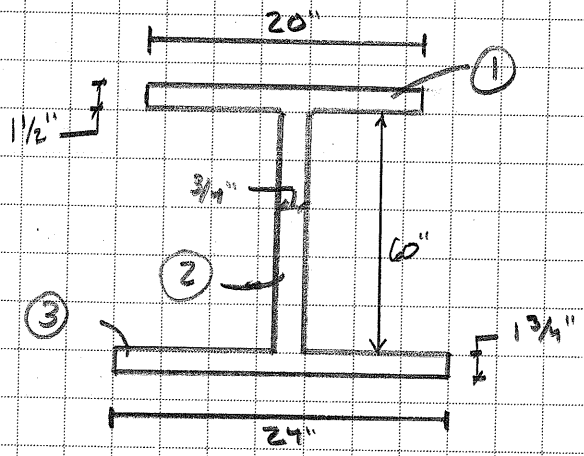

AREA
1). (20")(1½")
2). (60")(¾")
3). (24")(1¾")
Σ 117 in²

DENSITY OF STL
.284 lb/in³

DEAD LOAD:
= 117 in² · .284 lb/in³
= 33.28 lb·in
= 398.7 plf

FACTOR LOAD UP BY 10% = 440 plf

GIRDER A

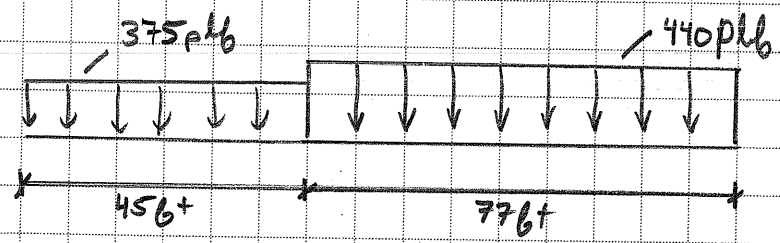

WEIGHT = 440(77) + 375(45)
= 50,755 lbs

GIRDER B

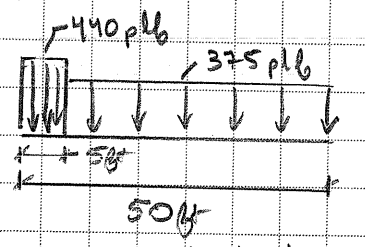

WEIGHT = (440)(5) + 375(45)
= 19,075 lbs

BEAMBOY V2.0 REPORT

HL-150T SUPPORT REACTIONS

LOAD CONFIGURATION

Point Loads

6000 lb., x=69.9 ft.
20800 lb., x=62 ft.
8750 lb., x=59.9 ft.
58800 lb., x=0 ft.

Distributed Loads

Start=1020 lb./ft., x=30.8 ft.; End=1020 lb./ft., x=69.9 ft.
Start=63.5 lb./ft., x=0 ft.; End=63.5 lb./ft., x=30.8 ft.

Moments

Supports

Simple support; 30.8 ft., Reaction=134000 lb.
Simple support; 69.9 ft., Reaction=2140 lb.

6/6/2016

BEAMBOY V2.0 REPORT

DEMAG AC180 SUPPORT REACTIONS

LOAD CONFIGURATION

Point Loads

70500 lb., x=78.2 ft.
63600 lb., x=0 ft.

Distributed Loads

Start=1690 lb./ft., x=39 ft.; End=1690 lb./ft., x=78.2 ft.
Start=150 lb./ft., x=0 ft.; End=150 lb./ft., x=39 ft.

Moments

Supports

Simple support; 39 ft., Reaction=169000 lb.
Simple support; 78.2 ft., Reaction=37400 lb.

6/6/2016

CALDERWOOD ENGINEERING ETC, LLC
222 RIVER ROAD
RICHMOND, ME 04357
PH. (207) 737-2007 FAX (207) 737-2008
www.calderwoodengineering.com

NOTES:

→ THE CRANE MATS USED BY THE DEMAG AC180 AND HL-1507 FOR THE ABUTMENTS SHALL REMAIN IN USE FOR THE ERECTION OF THE GIRDERS.

↳ (5) 4' × 12' × 8" FOR DEMAG AC 180

↳ (4) 4' × 12' × 8" FOR HL-1507

→ MAXIMUM RADIUS FOR LINKBELT 8050 BASED ON A MAXIMUM PICK UP OF 350 lbs (CROSSFRAMES).

↳ DON'T EXCEED 3,300 lb PICK UP @ THIS RADIUS (100 ft)

→ SEE PAGE 13

CALDERWOOD ENGINEERING ETC, LLC
222 RIVER ROAD
RICHMOND, ME 04357
PH. (207) 737-2007 FAX (207) 737-2008
www.calderwoodengineering.com

GIRDER A – CALCULATE CENTROID OF GIRDERS

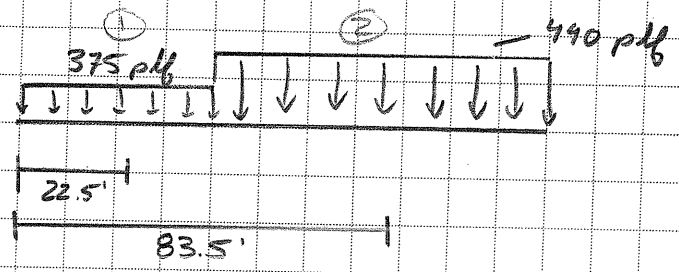

	A	$\bar{y}$	$A\bar{y}$
1	16875	22.5	379687.5
2	33880	83.5	2828980
	50755		3208667.5

$$\bar{y} = \frac{3208667.5}{50755} = 63.22 \text{ ft}$$

Note: Total Wt of A Girder < Wt of WW1 (from Precast) Therefor ok to use Same Crane Mats from Precast for Demag

GIRDER B

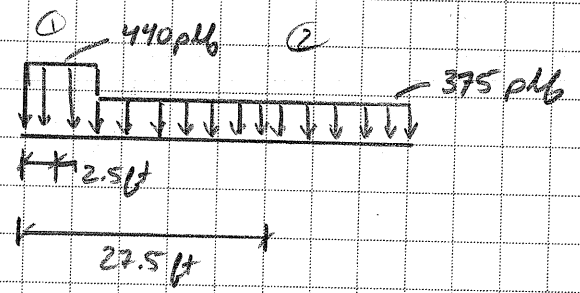

	A	$\bar{y}$	$A\bar{y}$
1	2200	2.5	5500
2	16875	27.5	464062.5
	19075		469562.5

$$\bar{y} = \frac{469562.5}{19075} = 24.62 \text{ ft}$$

Note: Total Wt of B Girders < Wt of PC3 (from Precast) Therefor ok to Use Same # of Crane Mats from Precast for HL-15GT

CALDERWOOD ENGINEERING ETC, LLC
222 RIVER ROAD
RICHMOND, ME 04357
PH. (207) 737-2007 FAX (207) 737-2008
www.calderwoodengineering.com

CROSS-SECTION 1

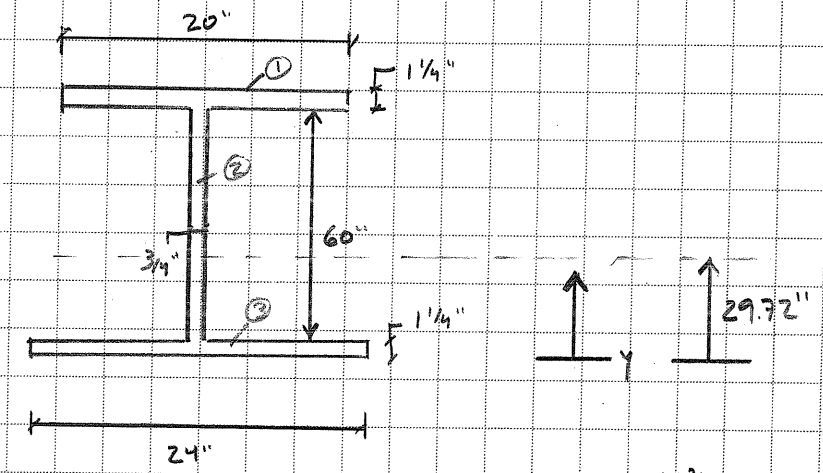

COMP	A	y	Ay	I $\left(\frac{bh^3}{12}\right)$	d	$d^2A + I$
1	25	61.875	1546.875	3.255	32.155	25851.86
2	45	31.25	1406.25	13500	1.53"	13605.34
3	30	.625	18.75	3.906	29.095	25399.5
Σ	100		2971.875			64856.7

$$\bar{y} = \frac{Ay}{A} = \frac{2971.875}{100} = 29.72"$$

$$S_{bot} = \frac{I}{y} = \frac{64856.7}{29.72} = 2182.3 \text{ in}^3$$

$$S_{top} = \frac{I}{d-y} = \frac{64856.7}{32.78} = 1978.5 \text{ in}^3$$

CALDERWOOD ENGINEERING ETC, LLC
222 RIVER ROAD
RICHMOND, ME 04357
PH. (207) 737-2007 FAX (207) 737-2008
www.calderwoodengineering.com

CHECK GIRDER A PICK-UP

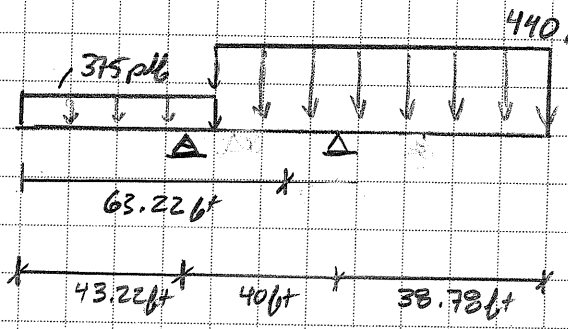

FROM BM BOY (Pg 21)
MAX MOMENT = -350 ft k @ 43.22 ft

MAXIMUM MOMENT OCCURS IN SMALLER CROSS-SECTION!

SECTION MODULUS = 2182.3 in³ (BOT B/C NEG MOMENT CAUSES COMPRESSION OF BOT FLANGE)

CHECK FOR LOCAL BUCKLING & COMPACTION (6.10.8.2.2)

$\lambda_f \leq \lambda_{pf}$

$$\lambda_f = \frac{b_{fc}}{2t_{fc}} = \frac{24''}{2(1.25'')} = 9.6 \qquad \lambda_{pf} = .38\sqrt{\frac{E}{F_y}} = 9.2$$

$\lambda_f \not\leq \lambda_{pf}$ ∴ NON-COMPACT

$$F_{nc} = \left[1-\left(1-\frac{F_{yr}}{R_h F_{yc}}\right)\left(\frac{\lambda_f-\lambda_{pf}}{\lambda_{rf}-\lambda_{pf}}\right)\right] R_b R_h F_{yc}$$

6.10.1.10.1

$R_h = 1.0$

$F_{yr} = .7F_{yc}$
$= .7(50ksi)$
$= 35ksi$

$$\lambda_{rf} = .56\sqrt{\frac{E}{F_{yr}}}$$

$$\lambda_{rf} = .56\sqrt{\frac{29000ksi}{35ksi}} = 16.12$$

$R_b = 1.0$ if $\frac{2D_c}{t_w} \leq \lambda_{rw}$ $\qquad D_c = 28.47''$

$$\frac{2(28.47)}{.75} \leq 5.7\sqrt{\frac{29000ksi}{50ksi}}$$

$75.92 \leq 137.3$ ✓ OK $\quad R_b = 1.0$

$$F_{nc} = \left[1-\left(1-\frac{(35ksi)}{(1.0)(50ksi)}\right)\left(\frac{9.6-9.2}{16.12-9.2}\right)\right]$$
$= 49.03$ ksi

3.4.1

$M_{nc} = \phi F_{nc} S_x$, $\phi = 1.0$ FOR FLEXURE

$M_{nc} = (49.03ksi)(2182.3in^3)$
$= 8917377$ lb/ft > 350000 lb/ft OK ✓

CALDERWOOD ENGINEERING ETC, LLC
222 RIVER ROAD
RICHMOND, ME 04357
PH. (207) 737-2007 FAX (207) 737-2008
www.calderwoodengineering.com

CHECK FOR LATERAL TORSIONAL BUCKLING (6.10.8.2.3)

$L_b = 43.22\ ft = 518.64\ in$

$L_p = 1.0\ r_t \sqrt{\frac{E}{F_{yc}}}$

$r_t = \frac{b_{fc}}{\sqrt{12\left(1+\frac{1}{3}\frac{D_c t_w}{b_{fc} t_{fc}}\right)}}$

$L_p = 1.0(6.22)\sqrt{\frac{29000\ ksi}{50\ ksi}}$

$= \frac{24}{\sqrt{12\left(1+\frac{1}{3}\frac{(28.47)(.75)}{(24)(1.25)}\right)}}$

$\underline{L_p = 150\ in}$

$L_r = \pi r_t \sqrt{\frac{E}{F_{yr}}}$

$= 6.22\ in$

$L_r = \pi(6.22)\sqrt{\frac{29000}{35}}$

$= 563.25\ in$

B/c $L_p < L_b \leq L_r$

$F_{nc} = C_b\left[1-\left(1-\frac{F_{yr}}{R_h F_{yc}}\right)\left(\frac{L_b-L_p}{L_r-L_p}\right)\right] R_b R_h F_{yc} \leq R_b R_h F_{yc}$

$F_{nc} = (1.0)\left[1-\left(1-\frac{35ksi}{(1.0)(50ksi)}\right)\left(\frac{518.64-150}{563.25-150}\right)\right](1.0)(1.0)(50ksi) \leq (1.0)(1.0)(50ksi)$

$F_{nc} = 36.62\ ksi \leq 50\ ksi$ ✓ OK

1.0 FOR FLEXURE 3.4.1

$M_{nc} = \phi F_{nc} S_x$

$= (1.0)(36.62ksi)(2182.3\ in^3)$

$= 6659559\ lb\cdot ft > 350000\ lb\cdot ft$ OK ✓

PICK UP GIRDER A W/ STRAPS SPACED 40 ft APART
20 ft OFF EITHER SIDE OF THE CENTER OF GRAVITY

CALDERWOOD ENGINEERING ETC, LLC
222 RIVER ROAD
RICHMOND, ME 04357
PH. (207) 737-2007 FAX (207) 737-2008
www.calderwoodengineering.com

CHECK GIRDER B PICK-UP

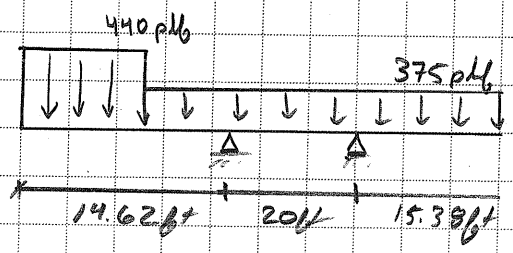

FROM BM 604 (Pg 22)
MAX MOMENT = -44,400 lb·ft @ PICK POINTS

MAXIMUM MOMENT OCCURS IN SMALLER SECTION!
$S_x = 2182.3 in^3$

CHECK FOR COMPACTION & LOCAL BUCKLING

KNOWN FROM PAGE 3

SHAPE IS NON-COMPACT
$M_n = 8917,377 lb ft > 44,400 lb \cdot ft$
∴ WONT FAIL IN LOCAL BUCKLING OK ✓

CHECK LATERAL TORSIONAL BUCKLING ($L_b = 15.38 ft$)

KNOWN FROM PAGE 4

$L_p = 150 in$ $F_{yr} = 35 ksi$
$L_r = 563.25 in$ $F_{yc} = 50 ksi$
$L_b = 184 in$ $C_b = 1.0$ ← CONSERVATIVELY

∴ $L_p < L_b \leq L_r$

$$F_{nc} = C_b\left[1 - \left(1 - \frac{F_{yr}}{R_h F_{yc}}\right)\left(\frac{L_b - L_p}{L_r - L_p}\right)\right] R_b R_h F_{yc} \leq R_b R_h F_{yc}$$

$= 48.74 ksi$

← 1.0 FOR FLEXURE

$M_{nc} = \phi F_{nc} S_x$
$M_{nc} = (1.0)(48.74)(2182.3 in^3)$
$= 8864820 lb ft > 44,400 lb \cdot ft$
∴ WON'T FAIL IN LATERAL TORSIONAL BUCKLING OK ✓

PICK UP GIRDER B W/ STRAPS SPACED 20 ft APART
10 ft OFF EITHER SIDE OF THE CENTER OF GRAVITY

CALDERWOOD ENGINEERING ETC, LLC
222 RIVER ROAD
RICHMOND, ME 04357
PH. (207) 737-2007 FAX (207) 737-2008
www.calderwoodengineering.com

JOB
SHEET NO. 18 OF 23
CALCULATED BY DATE
CHECKED BY DATE
SCALE

	BOOM	MAX RADIUS	MAX LOAD
DEMAG AC 180	98.1'	72'	50,755 lb
LINK BELT 8050	105'	100'	350 lb
AMERICAN HC 125	140'	57.2'	22,900 lb
GROVE HL 1507	150'	90'	22,900 lb

CALDERWOOD ENGINEERING ETC, LLC
222 RIVER ROAD
RICHMOND, ME 04357
PH. (207) 737-2007 FAX (207) 737-2008
www.calderwoodengineering.com

CHECK NEED FOR Temporary Support AT FIELD SPLICE

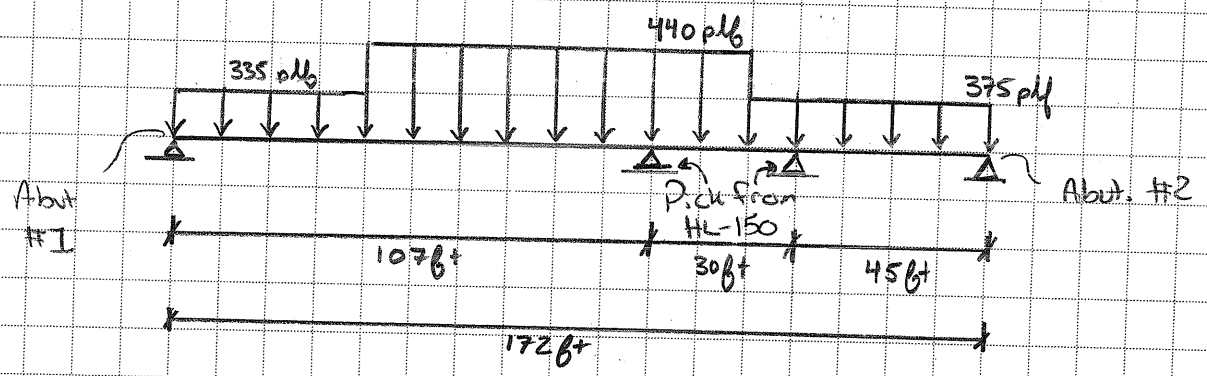

FROM Bm BOY $M_{max} = -485{,}340$ ft·lb @ 107ft
SEE PAGE 20

CONSERVATIVELY CHECK IN SMALLER SECTION
W/ SMALLER SECTION MODULUS $S_x = 1978.5\ in^3$ ← Pg 3

LOCAL BUCKLING

KNOW FROM Pg 4: SHAPE IS NON-COMPACT
$M_{nc} = 8{,}917{,}377$ lb·ft > 485340 ft·lb ✓
∴ WON'T FAIL IN LOCAL BUCKLING

LATERAL TORSIONAL BUCKLING

$L_b = 107ft = 1284\ in$ KNOW FROM Pg 5: $L_p = 150\ in$ $r_t = 6.22\ in$
$L_r = 563.25\ in$

$L_b > L_r$ ∴ $F_{nc} = F_{cr} \le R_b R_h F_y$

$$= \frac{C_b R_b \pi^2 E}{\left(\frac{L_b}{r_t}\right)^2} \le 50\ ksi$$

$$= \frac{(1.0)(1.0)\pi^2(29000\ ksi)}{\left(\frac{1284}{6.22}\right)^2}$$

$= 6.73\ ksi$

$M_{nc} = \phi F_{nc} S_x$
$= (1.0)(6.73\ ksi)(1978.5\ in^3)$
$= 11325.62\ in \cdot k$
$= 1{,}110{,}469$ ft·lbs > 485,340 ft·lb OK ✓

WON'T FAIL DUE TO DEAD WEIGHT

BEAMBOY V2.0 REPORT

GIRDERS A & B CONNECTED- MAX MOMENT

LOAD CONFIGURATION

Point Loads

Distributed Loads

Start=375 lb./ft., x=0 ft.; End=375 lb./ft., x=45 ft.
Start=440 lb./ft., x=45 ft.; End=440 lb./ft., x=127 ft.
Start=375 lb./ft., x=127 ft.; End=375 lb./ft., x=172 ft.

Moments

Supports

Simple support; 0 ft., Reaction=16694 lb.
Simple support; 172 ft., Reaction=8256.4 lb.
Simple support; 107 ft., Reaction=52108 lb.
Simple support; 137 ft., Reaction=-7228.3 lb.

MAXIMUM VALUES

Maximum Bending Moment = -485340 lb.-ft. at x=107 ft.
Maximum Bending Stress = 5824.1 ksi at x=107 ft.
Maximum Deflection = -352.83 in. at x=48.057 ft.
Maximum Slope = -56.56 degrees at x=0.0172 ft.

6/15/2016

BEAMBOY V2.0 REPORT

GIRDER A PICK UP- MAX MOMENT

LOAD CONFIGURATION

Point Loads

Distributed Loads

Start=375 lb./ft., x=0 ft.; End=375 lb./ft., x=45 ft.
Start=440 lb./ft., x=45 ft.; End=440 lb./ft., x=122 ft.

Moments

Supports

Simple support; 43.2 ft., Reaction=25400 lb.
Simple support; 83.2 ft., Reaction=25400 lb.

MAXIMUM VALUES

Maximum Bending Moment = -350000 lb.-ft. at x=43.2 ft.
Maximum Bending Stress = 4200 ksi at x=43.2 ft.
Maximum Deflection = -394 in. at x=0 ft.
Maximum Slope = 49.3 degrees at x=0 ft.

6/15/2016

BEAMBOY V2.0 REPORT

GIRDER B PICK UP- MAX MOMENT

LOAD CONFIGURATION

Point Loads

Distributed Loads

Start=440 lb./ft., x=0 ft.; End=440 lb./ft., x=5 ft.
Start=375 lb./ft., x=5 ft.; End=375 lb./ft., x=50 ft.

Moments

Supports

Simple support; 14.6 ft., Reaction=9540 lb.
Simple support; 34.6 ft., Reaction=9530 lb.

MAXIMUM VALUES

Maximum Bending Moment = -44400 lb.-ft. at x=34.6 ft.
Maximum Bending Stress = 532 ksi at x=34.6 ft.
Maximum Deflection = -7.2 in. at x=50 ft.
Maximum Slope = -2.5 degrees at x=50 ft.

6/15/2016

TEREX LIFTING

AMERICAN HC 125

Hydraulic Crawler Crane

LIFT RATINGS IN POUNDS

With 59H Open Throat Boom, 24' Floating Mast and 51,000 Pound Counterweight Fully Retracted

Boom & Mast Length	Radius Feet	Boom Angle Degrees	Side Frames Retracted Pounds	Side Frames Extended Pounds	From Boom Pt. to Ground Feet
50' Boom	12	81.0	250,000*	250,000*	56
	15	77.5	180,380	220,000*	55
	20	71.5	113,920	147,800	54
	25	65.3	82,690	103,810	52
	30	58.8	64,520	79,600	49
	35	51.7	52,680	64,230	46
	40	43.9	44,310	53,680	41
	50	22.3	33,220	39,950	25
60' Boom	14	80.6	204,080	220,000*	66
	15	79.6	180,490	220,000*	66
	20	74.7	113,950	147,890	65
	25	69.6	82,680	103,850	63
	30	64.4	64,460	79,610	61
	35	59.0	52,660	64,220	58
	40	53.2	44,270	53,680	54
	50	39.8	33,220	39,970	45
	60	20.3	26,250	31,480	27
70' Boom	16	80.3	161,850	206,570*	76
	20	76.9	113,970	147,960	75
	25	72.7	82,690	103,880	73
	30	68.3	64,460	79,620	72
	35	63.8	52,650	64,220	69
	40	59.1	44,250	53,680	67
	50	48.9	33,210	39,980	59
	60	36.7	26,300	31,500	48
	70	18.8	21,470	25,760	29
80' Boom	17	80.8	146,560	194,360*	86
	20	78.6	113,890	147,940	85
	25	74.9	82,570	103,800	84
	30	71.1	64,320	79,520	82
	35	67.3	52,500	64,100	80
	40	63.3	44,090	53,550	78
	50	54.9	33,040	39,830	72
	60	45.5	26,150	31,350	63
	70	34.2	21,350	25,660	51
	80	17.5	17,820	21,450	30
90' Boom	19	80.5	122,960	161,640	95
	20	79.9	113,850	147,910	95
	25	76.6	82,530	103,770	94
	30	73.3	64,260	79,480	93
	35	69.9	52,450	64,050	91
	40	66.5	44,040	53,510	89
	50	59.3	32,990	39,790	84
	60	51.5	26,120	31,310	77
	70	42.8	21,320	25,630	67
	80	32.2	17,820	21,450	54
	90	16.5	15,130	18,270	32
100' Boom	20	80.9	113,740	147,850	105
	25	78.0	82,380	103,660	104
	30	75.0	64,090	79,350	103
	35	72.0	52,270	63,880	102
	40	69.0	43,860	53,350	100
	50	62.7	32,770	39,590	95
	60	56.0	25,920	31,110	89
	70	48.7	21,130	25,450	81
	80	40.5	17,630	21,270	71
	90	30.5	14,960	18,110	57
	100	15.6	12,830	15,600	33

Boom & Mast Length	Radius Feet	Boom Angle Degrees	Side Frames Retracted Pounds	Side Frames Extended Pounds	From Boom Pt. to Ground Feet
110' Boom	22	80.7	98,620	126,330	115
	25	79.1	82,230	103,530	115
	30	76.4	63,930	79,210	114
	35	73.7	52,110	63,730	112
	40	71.0	43,690	53,200	111
	50	65.3	32,610	39,440	107
	60	59.4	25,770	30,950	101
	70	53.2	20,960	25,310	94
	80	46.3	17,480	21,130	86
	90	38.5	14,800	17,960	75
	100	29.0	12,700	15,470	60
	110	14.8	10,990	13,470	34
120' Boom	23	81.0	92,290	117,560	125
	25	80.0	82,080	103,400	125
	30	77.6	63,740	79,050	124
	35	75.1	51,930	63,550	123
	40	72.6	43,490	53,020	121
	50	67.5	32,380	39,230	117
	60	62.2	25,550	30,720	113
	70	56.7	20,750	25,090	107
	80	50.7	17,250	20,910	99
	90	44.2	14,580	17,740	90
	100	36.8	12,480	15,260	78
	110	27.8	10,780	13,260	62
	120	14.2	9,370	11,610	36
130' Boom	25	80.8	81,910	103,250	135
	30	78.5	63,580	78,910	134
	35	76.3	51,770	63,390	133
	40	74.0	43,330	52,870	132
	50	69.3	32,230	39,080	128
	60	64.5	25,400	30,570	124
	70	59.5	20,610	24,950	119
	80	54.2	17,110	20,770	112
	90	48.6	14,440	17,600	104
	100	42.4	12,350	15,130	94
	110	35.3	10,640	13,130	81
	120	26.6	9,250	11,490	65
	130	13.6	8,070	10,110	37
* 140' Boom	27	80.6	73,350	91,760	145
	30	79.4	63,380	78,740	144
	35	77.3	51,560	63,210	143
	40	75.2	43,120	52,680	142
	50	70.9	32,000	38,870	139
	60	66.5	25,190	30,340	135
	70	61.9	20,370	24,730	130
	80	57.2	16,870	20,540	124
	90	52.1	14,200	17,370	117
	100	46.7	12,110	14,900	108
	110	40.8	10,410	12,900	98
	120	34.0	9,010	11,260	84
	130	25.6	7,830	9,880	67
	140	13.1	6,840	8,720	38
150' Boom	28	80.8	69,530	86,950	155
	30	80.1	63,180	78,570	154
	35	78.1	51,380	63,010	153
	40	76.2	42,920	52,490	152
	50	72.2	31,790	38,670	149
	60	68.1	24,980	30,140	146

Boom & Mast Length	Radius Feet	Boom Angle Degrees	Side Frames Retracted Pounds	Side Frames Extended Pounds	From Boom Pt. to Ground Feet
150' Boom (cont.)	70	63.9	20,180	24,540	141
	80	59.6	16,670	20,350	136
	90	55.0	14,000	17,180	129
	100	50.2	11,900	14,700	122
	110	45.0	10,200	12,700	112
	120	39.3	8,810	11,060	101
	130	32.8	7,640	9,690	87
	140	24.8	6,630	8,520	69
	150	12.7	5,770	7,520	39
160' Boom	30	80.7	62,990	78,410	165
	35	78.9	51,180	62,830	164
	40	77.1	42,700	52,300	163
	50	73.3	31,560	38,450	160
	60	69.6	24,760	29,910	157
	70	65.7	19,940	24,310	152
	80	61.7	16,430	20,120	147
	90	57.5	13,760	16,940	141
	100	53.2	11,650	14,460	134
	110	48.5	9,950	12,450	126
	120	43.5	8,550	10,810	116
	130	38.0	7,380	9,440	105
	140	31.7	6,380	8,270	90
	150	24.0	5,530	7,280	71
	160	12.3	4,780	6,400	40
170' Boom	31	80.9	59,980	73,340*	175
	35	79.6	50,980	62,630	174
	40	77.8	42,500	52,110	173
	50	74.3	31,360	38,260	170
	60	70.8	24,570	29,710	167
	70	67.2	19,760	24,130	163
	80	63.5	16,240	19,930	159
	90	59.6	13,570	16,760	153
	100	55.6	11,470	14,270	147
	110	51.4	9,770	12,270	139
	120	47.0	8,370	10,630	131
	130	42.1	7,200	9,260	120
	140	36.8	6,210	8,100	108
	150	30.7	5,350	7,100	93
	160	23.2	4,610	6,240	73
	170	11.9	3,960	5,470	41
180' Boom	33	80.8	55,060	64,040*	184
	35	80.1	50,780	62,430	184
	40	78.5	42,290	51,920	183
	50	75.2	31,120	38,040	181
	60	71.9	24,350	29,480	178
	70	68.5	19,520	23,900	174
	80	65.1	16,010	19,700	170
	90	61.5	13,330	16,530	165
	100	57.8	11,220	14,030	159
	110	53.9	9,520	12,030	152
	120	49.9	8,110	10,380	144
	130	45.6	6,950	9,010	135
	140	40.9	5,940	7,840	124
	150	35.7	5,090	6,840	111
	160	29.8	4,340	5,970	96
	170	22.5	3,690	5,220	75
	180	11.5	3,130	4,560	42

(Continued)

Boom : 140 ft

MAX LOAD: 19,075 lbs ∴ MAX RADIUS = 57.2 ft

liftex®
the world's best slings

www.liftex.com
(800) 299-0900

ENDLESS ROUNDSLING CAPACITY CHART

	Part Number	Vertical	Choker	Basket	Minimum Length	Approx. Diameter	Approx. WT / FT
PURPLE	ENR1	2600	2100	5200	3′	.625″	0.3 LB
GREEN	ENR2	5300	4200	10600	3′	.875″	0.4 LB
	ENR3	8400	6700	16800	3′	1.125″	0.5 LB
	ENR4	10600	8500	21200	3′	1.125″	0.6 LB
RED	ENR5	13200	10600	26400	3′	1.375″	0.8 LB
WHITE	ENR6	16800	13400	33600	6′	1.375″	0.9 LB
BLUE	ENR7	21200	17000	42400	6′	1.625″	1.3 LB
ORANGE	ENR8	25000	20000	50000	6′	1.750″	1.6 LB
ORANGE	ENR9	31000	24800	62000	6′	2.125″	2.0 LB
ORANGE	ENR10	40000	32000	80000	6′	2.350″	2.6 LB
ORANGE	ENR11	53000	42400	106000	8′	3.150″	3.4 LB
ORANGE	ENR12	66000	52800	132000	8′	3.950″	4.3 LB
ORANGE	ENR13	90000	72000	180000	8′	4.800″	5.9 LB

We are using These

Slings for Precast Lifts

**Before ordering slings that are going to be used in a chemically active environment, contact Liftex® Customer Service, to recommend the right sling for the right usage.*
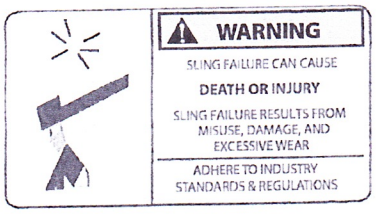
***Chemically Active Environments can affect the** strength of webbing slings in varying degrees, ranging from little to total degradation.*