GENERAL NOTES

CONSTRUCTION SPECIFICATIONS

1. ALL MATERIAL AND WORKMANSHIP SHALL CONFORM TO THE STATE OF VERMONT, AGENCY OF TRANSPORTATION STANDARD SPECIFICATIONS FOR CONSTRUCTION, DATED 2011, AND ITS LATEST REVISIONS, AND THE AASHTO STANDARD SPECIFICATIONS FOR HIGHWAY BRIDGES, LRFD SIXTH EDITION, DATED 2012 AND ITS LATEST REVISIONS.

MATERIAL SPECIFICATION

1. ALL STRUCTURAL STEEL SHALL CONFORM TO AASHTO M270 GRADE 50W.
2. MATERIAL NOTED "T2" ON DETAIL DRAWINGS SHALL BE CHARPY V-NOTCH TESTED IN ACCORDANCE WITH SUBSECTION 714.01.
3. HIGH STRENGTH BOLTS SHALL BE ASTM A325, TYPE 3, WITH ASTM A563 DH3 NUTS AND ONE ASTM F436 TYPE 3 WASHER PER BOLT. ROTATIONAL CAPACITY TESTING SHALL BE REQUIRED FOR ALL BOLT ASSEMBLIES. per Section 506.19(c) of the Standard Specfications.

FABRICATION

1. THE BOTTOM FLANGE OF GIRDERS AT BEARINGS SHALL BE SHOP STRAIGHTENED AS REQUIRED TO PROVIDE UNIFORM CONTACT BETWEEN THE GIRDER FLANGE AND THE BEARINGS AT THE BRIDGE SEAT. NOTED AS "BRG. AREA" ON DETAILS.
2. ALL HOLES SHALL BE ~~PUNCHED OR DRILLED FULL SIZE (UN)~~. fabricated per Section 506.19(a) of the Standard Specifications.

SHOP WELDING AND TESTING

1. WELDING AND NON-DESTRUCTIVE TESTING SHALL BE IN ACCORDANCE WITH ANSI/AASHTO/AWS BRIDGE WELDING CODE, D1.5 (LATEST EDITION).
2. FOR WELDING CONNECTION PLATES TO GIRDERS SEE "TYP. WELD TERMINATION DETAIL".
3. NON-DESTRUCTIVE TESTING OF WELDS SHALL BE IN ACCORDANCE WITH THE REFERENCED SPECIFICATIONS.

NOTE: WPS 203 with Supporting PQR is missing

SHOP CLEANING

1. BLAST CLEAN ALL STEEL TO SSPC-SP10 (NEAR WHITE) EITHER BEFORE OR AFTER FABRICATION .

SHOP PAINTING

1. NO PAINT

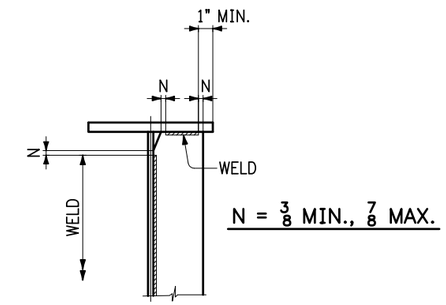

TYP. WELD TERMINATION DETAIL

_____ Approved
X Rejected
_____ Approved As Noted

This review is only for general conformance with the design concept and the information given in the Construction Documents. Corrections or comments made on the shop drawings during the review do not relieve the Contractor from compliance with the requirements of the Plans and Specifications. Review of a specific item shall not include review of an assembly of which an item is a component. The Contractor is responsible for dimensions to be confirmed and corrected at the job site; information that pertains solely to the fabrication process or to the means, methods, techniques, sequences and procedures of construction; coordination of the Work with that of other trades and performing all Work in a safe and satisfactory manner.

McFarland Johnson

Date 3/23/2016

By D. Kull

Vermont Agency of Transportation
RECEIVED
CK'D BY _____ OK'D BY Rob Young
March 14, 2016
RESUBMIT Yes Rejected
BY Rob Young DATE 03/24/2016

NO.	DATE	REMARKS	BY

REVISIONS

CASCO BAY STEEL STRUCTURES
ONE WALLACE AVENUE
SOUTH PORTLAND, ME 04106
PHONE: 207-780-6722
FAX: 207-780-6726

STRUCTURE VT 100 OVER MAD RIVER
LOCATION TOWN OF WAITSFIELD, VERMONT
PROJECT NO. PROJECT NO. BRF 013-4(39) BRIDGE NO. 177
ENGINEER MCFARLAND JOHNSON
CUSTOMER A.L. ST. ONGE CONTRACTOR, INC.
ITEM GENERAL NOTES
SURFACE PREP. _____ OPEN HOLES _____
PAINT _____

APPROVAL	DRAWN WCG 1-25-16	SHEET NO.	JOB NO.
SHOP	CHECKED FM 3-8-16	GN1	651

1500-22

GN-1500

Sheet GN1 - Plotted: 03/14/2016 @ 09:41 (HEATHER)

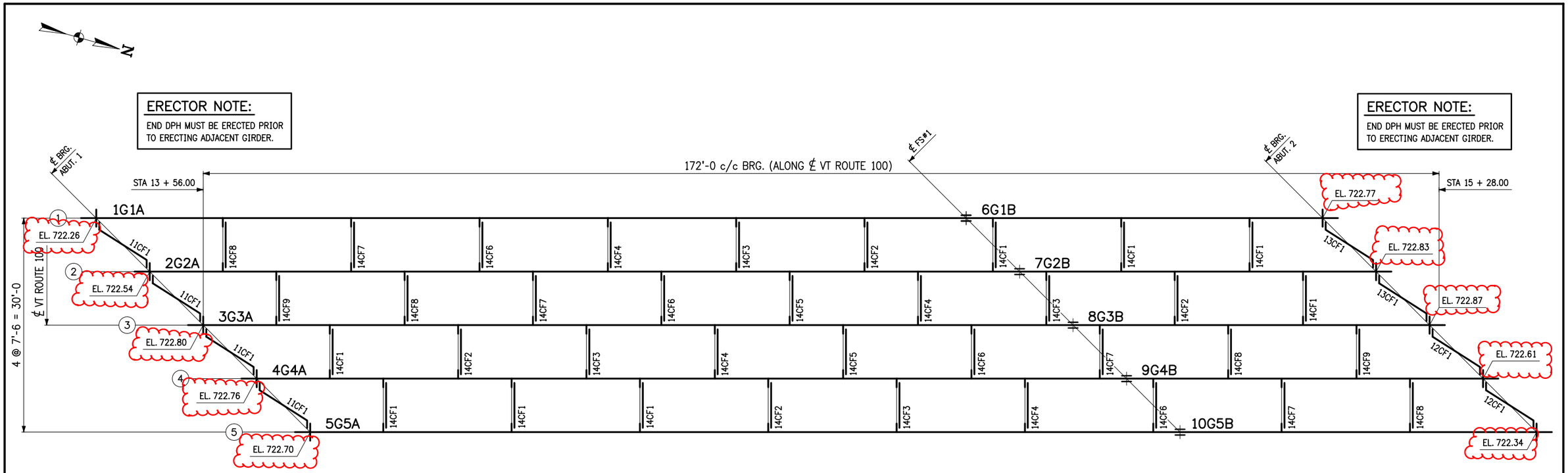

Contractor to verify bottom of steel elevations with approved VE plans (Typ both abutments)

ERECTION PLAN

CONTRACTOR NOTE:
ELEVATIONS ARE GIVEN TO BOTTOM OF STEEL - DO NOT POUR TO FINAL ELEVATIONS WITHOUT VERIFICATION OF BEARING HEIGHTS AND BRIDGE SEATS.

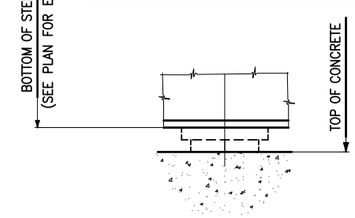

TYP. BRG. ELEVATION
(@ ABUTS. 1 ℄ 2)

NOTES:

1. FOR GENERAL NOTES, SEE DWG. GN1.
2. ALL DIMENSIONS ARE GIVEN IN A HORIZONTAL PLANE.

FIELD BOLT LIST							A325 TYPE 3 BOLTS							
LINE	NO. REQ'D.	BOLT DIAM.	BOLT LEN.	BOLTS /CONN.	# OF CONN.	GRIP	THICKNESS OF PCS. CONNECTED						WASH CODE	PIECES CONNECTED AND REMARKS
1														**FIELD SPLICES**
2	600	7/8	3	120	5	1 3/4	1/2	3/4	1/2				1	WEB SPLICE
3	320	7/8	4 1/4	64	5	3	3/4	1 1/2	3/4				1	TOP FLANGE SPLICE
4	480	7/8	5	96	5	3 3/4	1"	1 3/4	1"				1	BOTTOM FLANGE SPLICE
5														
6														**CROSSFRAMES**
7	648	7/8	2 1/4	18	36	1"	1/2	1/2					1	INT. CF'S TO CONN. PL'S
8	72	7/8	2 3/4	18	4	1 1/2	1/2	1"					1	ABUT. 1 CF'S TO BRG. STIFF.
9	80	7/8	3	20	4	1 3/4	3/4	1"					1	ABUT. 2 CF'S TO BRG. STIFF.
10														
11														

WASHER CODES
1: 1 HARD FLAT WASHER

FIELD BOLT SUMMARY			2% + 3 ADDED, MIN. 3 EXTRA			
LINE	NO. OF BOLTS	BOLT DIAM.	TYPE	BOLT LEN.	ACTUAL COUNT	REMARKS
1	664	7/8	A325 Type 3	2 1/4	648	
2	76	7/8	A325 Type 3	2 3/4	72	
3	697	7/8	A325 Type 3	3	680	
4	329	7/8	A325 Type 3	4 1/4	320	
5	493	7/8	A325 Type 3	5	480	
6						
7	2259	Hard Flat Washers for 7/8" BOLT			2200	F436-3
8						

NO.	DATE	REMARKS	BY

REVISIONS

CASCO BAY STEEL STRUCTURES
ONE WALLACE AVENUE
SOUTH PORTLAND, ME 04106
PHONE: 207-780-6722
FAX: 207-780-6726

STRUCTURE: VT 100 OVER MAD RIVER
LOCATION: TOWN OF WAITSFIELD, VERMONT
PROJECT NO.: PROJECT NO. BRF 013-4(39) BRIDGE NO. 177
ENGINEER: MCFARLAND JOHNSON
CUSTOMER: A.L. ST. ONGE CONTRACTOR, INC.
ITEM: ERECTION PLAN
SURFACE PREP.: OPEN HOLES
PAINT:

APPROVAL	DRAWN DMM 1-25-16	SHEET NO.	JOB NO.
SHOP	CHECKED FM 3-10-16	E1	651

Sheet E1 - Plotted: 03/14/2016 @ 09:41 (HEATHER)

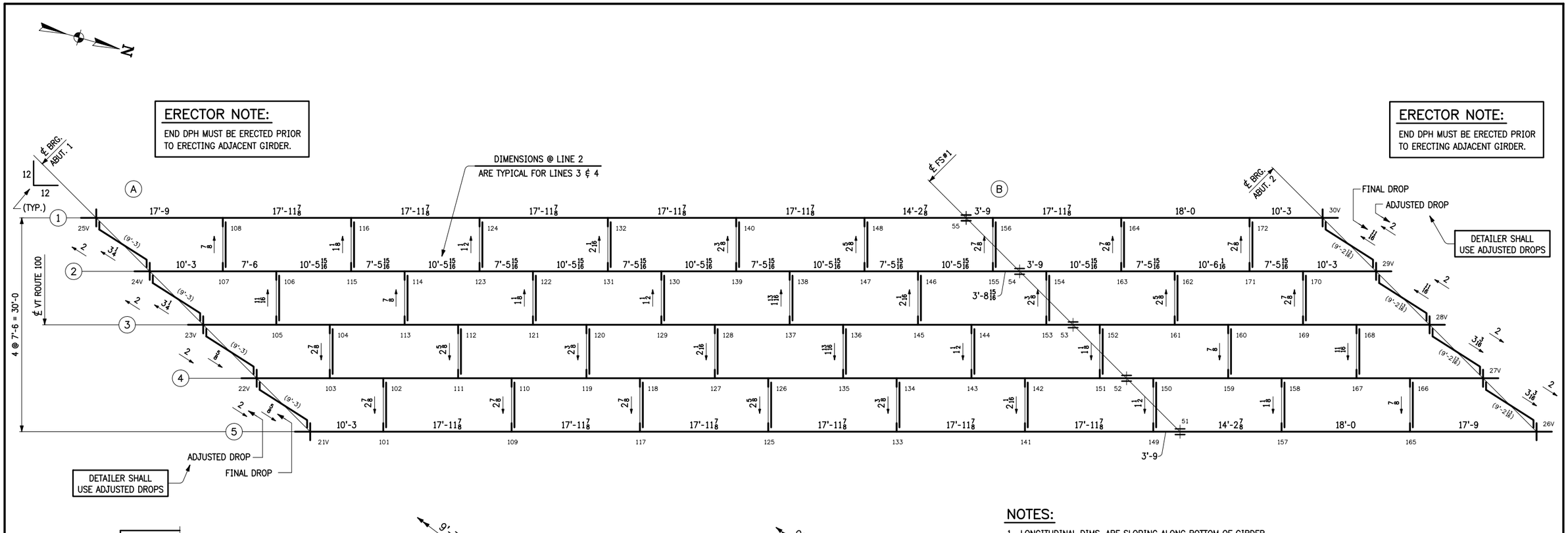

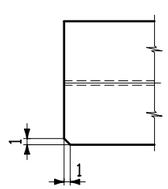

CLIP TOP FLANGE

(ABUT. 1 SHOWN)
(ABUT. 2 ROTATE 180°)

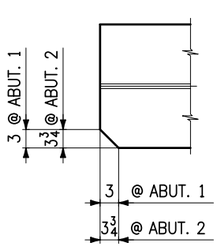

CLIP BOTTOM FLANGE

(ABUT. 1 SHOWN)
(ABUT. 2 ROTATE 180°)

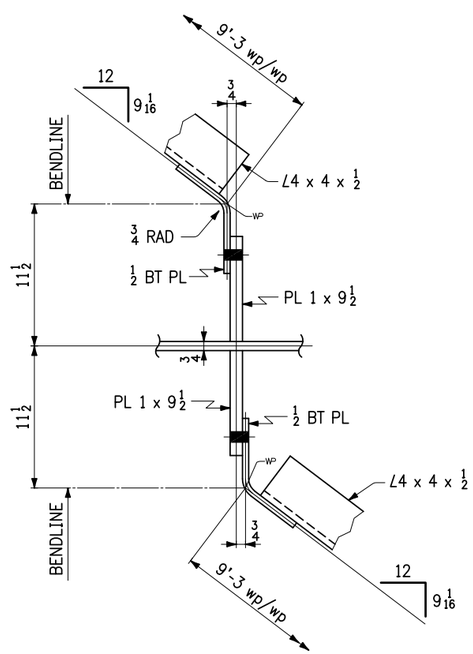

BENDLINE SCHEMATIC @ ABUT. 1

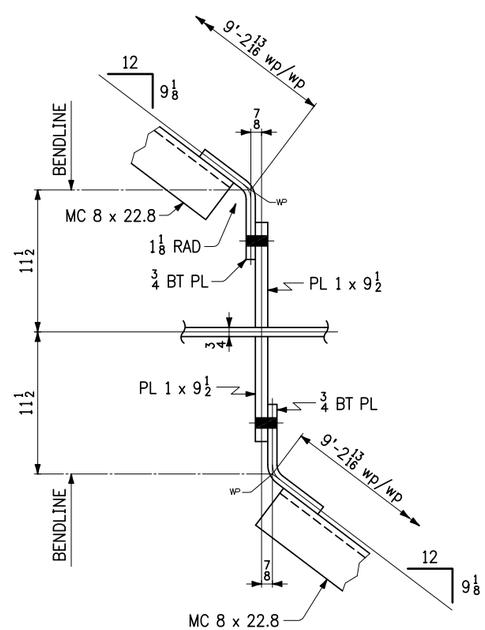

BENDLINE SCHEMATIC @ ABUT. 2

NOTES:

1. LONGITUDINAL DIMS. ARE SLOPING ALONG BOTTOM OF GIRDER IN CAMBERED POSITION.
2. TRANSVERSE DIMS. ARE HORIZONTAL.
3. ⟶ DENOTES DROP (ERECTED). ARROW POINTS TO LOW END.
4. ALL BEARING STIFFENERS, ENDS OF GIRDERS ARE VERTICAL IN FINAL POSITION.
5. INTERMEDIATE CONNECTION PLATES ARE NORMAL TO BOTTOM FLANGE.
6. FOR LAYOUTS SEE DWG. TD1 & TD2.

THIS IS A WORK DRAWING. ITS FUNCTION IS TO PROVIDE BASIC DIMENSIONS AND CONCEPTS FOR USE IN THE PREPARATION OF THE SHOP DETAILS. IT IS NOT INTENDED TO BE USED FOR ERECTION OR FABRICATION.

NO.	DATE	REMARKS	BY

REVISIONS

CASCO BAY STEEL STRUCTURES
ONE WALLACE AVENUE
SOUTH PORTLAND, ME 04106
PHONE: 207-780-6722
FAX: 207-780-6726

STRUCTURE: VT 100 OVER MAD RIVER
LOCATION: TOWN OF WAITSFIELD, VERMONT
PROJECT NO.: PROJECT NO. BRF 013-4(39) BRIDGE NO. 177
ENGINEER: MCFARLAND JOHNSON
CUSTOMER: A.L. ST. ONGE CONTRACTOR, INC.
ITEM: CALC PLAN
SURFACE PREP.: OPEN HOLES
PAINT:

APPROVAL	DRAWN WCG 1-20-16	SHEET NO.	JOB NO.
SHOP	CHECKED CS 1-27-16	WS1	651

1500-1

CPLN-1500A

Sheet WS1 - Plotted: 03/14/2016 @ 09:42 (HEATHER)

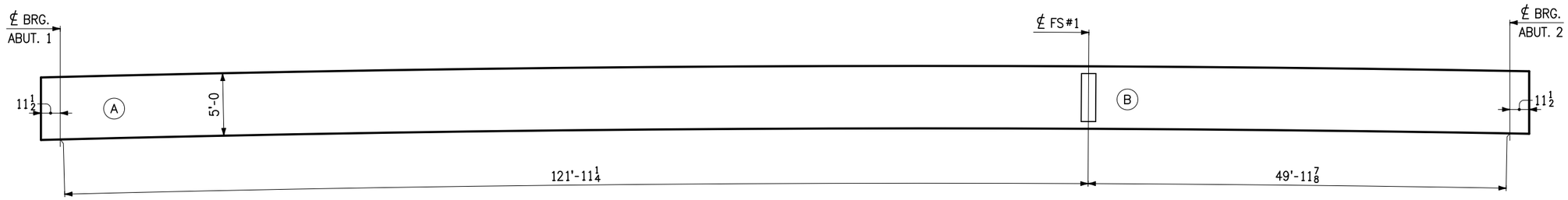

TYP. ELEVATION

FINAL GRADE @ ℄ BRGS		
LINE	ABUT. 1	ABUT. 2
1	.0171	-.0115
2	.0159	-.0128
3	.0146	-.0140
4	.0134	-.0153
5	.0121	-.0165

THIS IS A WORK DRAWING. ITS FUNCTION IS TO PROVIDE BASIC DIMENSIONS AND CONCEPTS FOR USE IN THE PREPARATION OF THE SHOP DETAILS. IT IS NOT INTENDED TO BE USED FOR ERECTION OR FABRICATION.

NO.	DATE	REMARKS	BY

REVISIONS

CASCO BAY STEEL STRUCTURES
ONE WALLACE AVENUE
SOUTH PORTLAND, ME 04106
PHONE: 207-780-6722
FAX: 207-780-6726

STRUCTURE: VT 100 OVER MAD RIVER
LOCATION: TOWN OF WAITSFIELD, VERMONT
PROJECT NO.: PROJECT NO. BRF 013-4(39) BRIDGE NO. 177
ENGINEER: MCFARLAND JOHNSON
CUSTOMER: A.L. ST. ONGE CONTRACTOR, INC.
ITEM: CALC PLAN
SURFACE PREP.: OPEN HOLES
PAINT:

APPROVAL	DRAWN WCG 1-20-16	SHEET NO.	JOB NO.
SHOP	CHECKED CT 1-27-16	WS2	651

1500-1

CPLN-1500B

Sheet WS2 - Plotted: 03/14/2016 @ 09:42 (HEATHER)

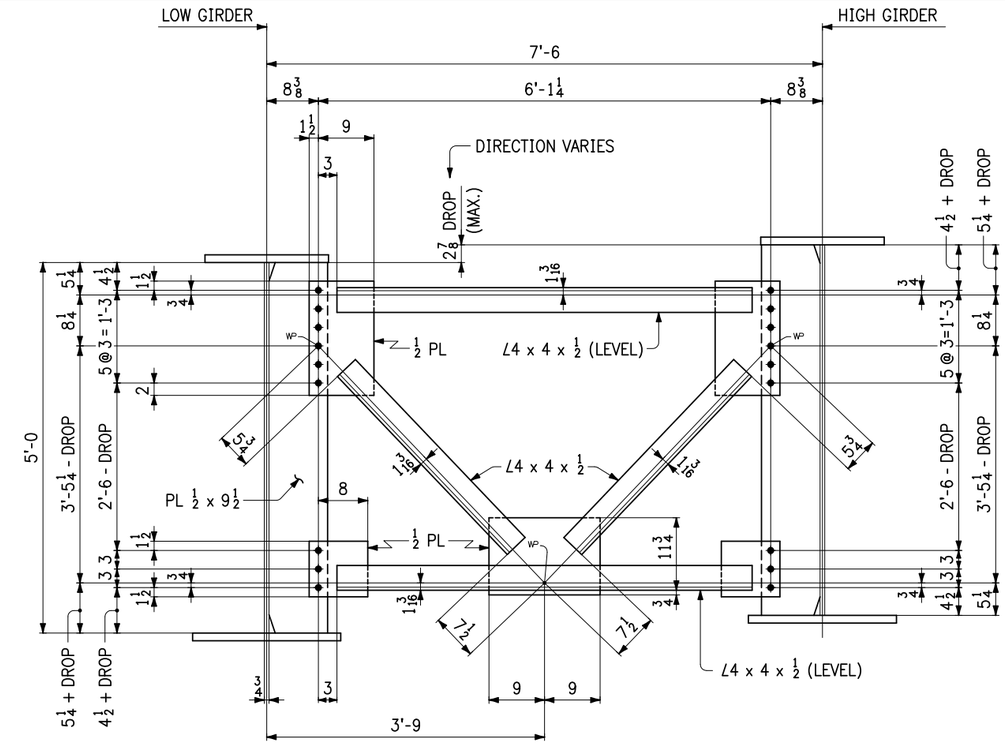

INTERMEDIATE CROSSFRAME

(LOOKING BACKSTATION)
(CFK27)

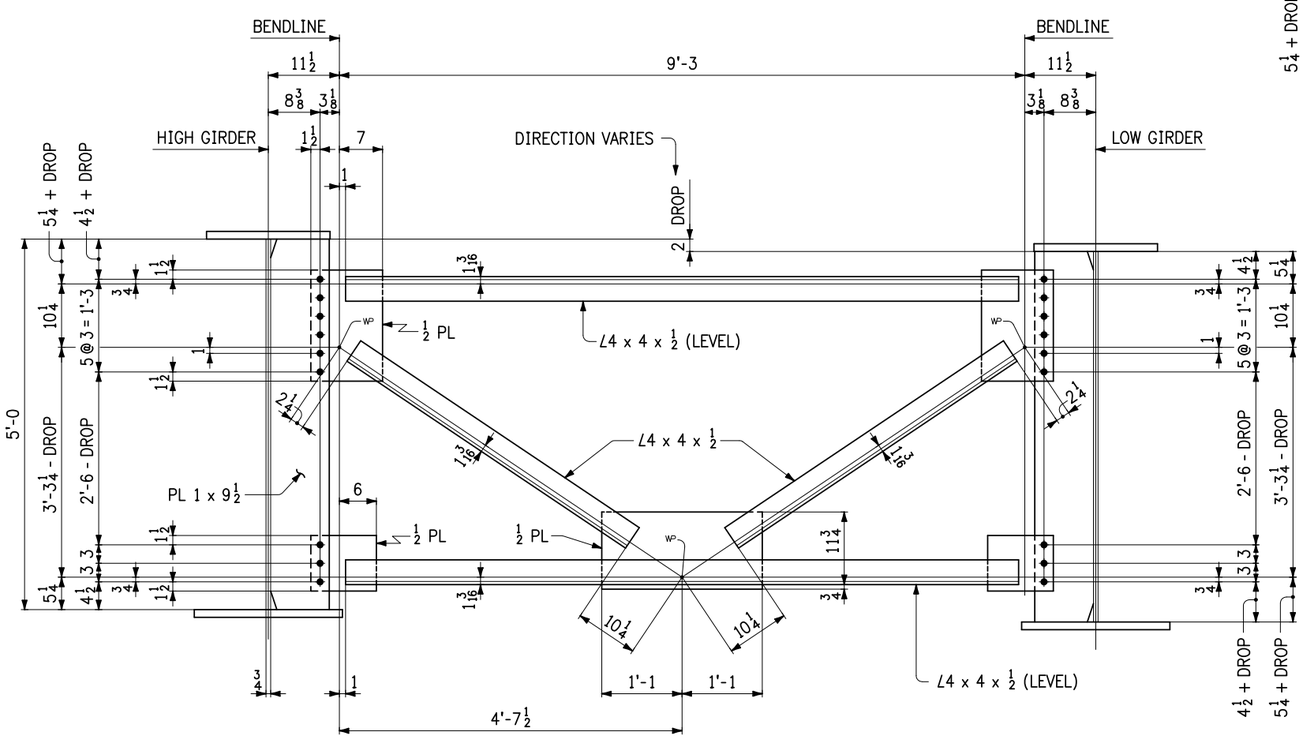

CROSSFRAME @ ABUT. 1

(LOOKING BACKSTATION)
(CFK27)

THIS IS A WORK DRAWING. ITS FUNCTION IS TO PROVIDE BASIC DIMENSIONS AND CONCEPTS FOR USE IN THE PREPARATION OF THE SHOP DETAILS. IT IS NOT INTENDED TO BE USED FOR ERECTION OR FABRICATION.

NO.	DATE	REMARKS	BY

REVISIONS

CASCO BAY STEEL STRUCTURES
ONE WALLACE AVENUE
SOUTH PORTLAND, ME 04106
PHONE: 207-780-6722
FAX: 207-780-6726

STRUCTURE: VT 100 OVER MAD RIVER
LOCATION: TOWN OF WAITSFIELD, VERMONT
PROJECT NO.: PROJECT NO. BRF 013-4(39) BRIDGE NO. 177
ENGINEER: MCFARLAND JOHNSON
CUSTOMER: A.L. ST. ONGE CONTRACTOR, INC.
ITEM: LAYOUT
SURFACE PREP.: OPEN HOLES: 15/16ø
PAINT:

APPROVAL	DRAWN WCG 1-20-16	SHEET NO.	JOB NO.
SHOP	CHECKED CT 1-27-16	TD1	651

1500-3 LYOT-1500A

Sheet TD1 - Plotted: 03/14/2016 @ 09:42 (HEATHER)

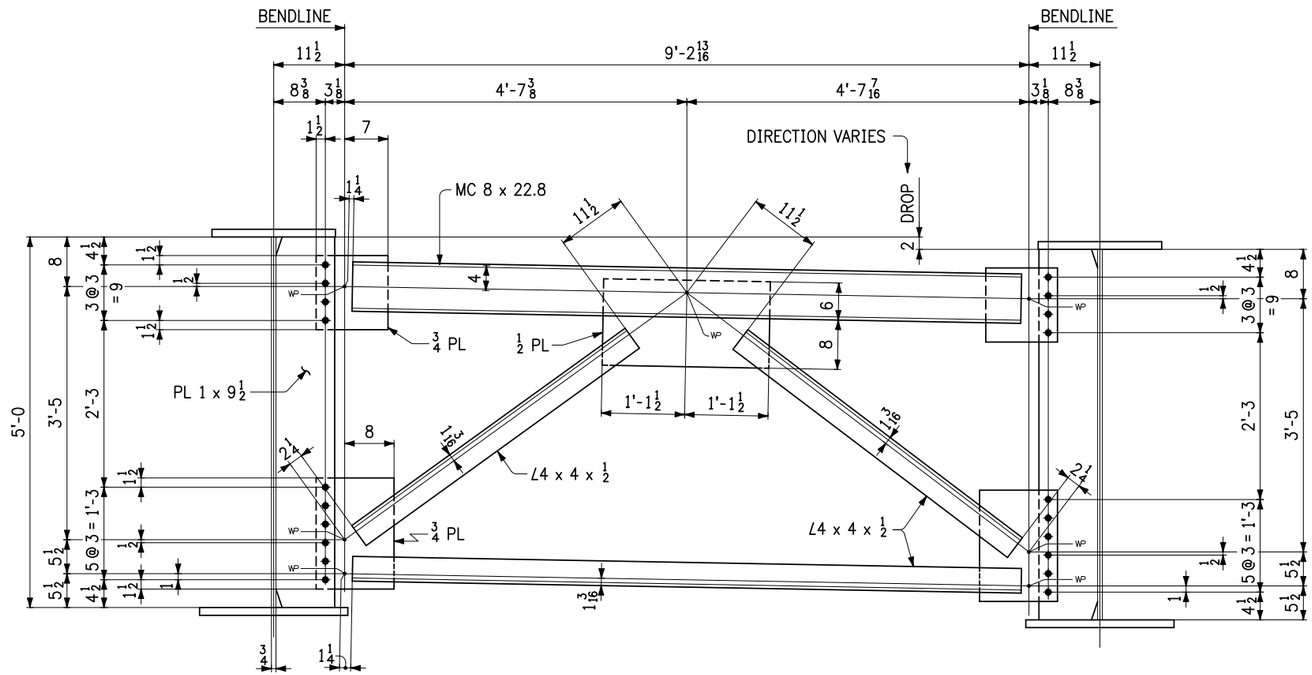

CROSSFRAME @ ABUT. 2

(LOOKING UPSTATION)
(CFK7)

THIS IS A WORK DRAWING. ITS FUNCTION IS TO PROVIDE BASIC DIMENSIONS AND CONCEPTS FOR USE IN THE PREPARATION OF THE SHOP DETAILS. IT IS NOT INTENDED TO BE USED FOR ERECTION OR FABRICATION.

NO.	DATE	REMARKS	BY

REVISIONS

CASCO BAY STEEL STRUCTURES
ONE WALLACE AVENUE
SOUTH PORTLAND, ME 04106
PHONE: 207-780-6722
FAX: 207-780-6726

STRUCTURE: VT 100 OVER MAD RIVER
LOCATION: TOWN OF WAITSFIELD, VERMONT
PROJECT NO.: PROJECT NO. BRF 013-4(39) BRIDGE NO. 177
ENGINEER: MCFARLAND JOHNSON
CUSTOMER: A.L. ST. ONGE CONTRACTOR, INC.
ITEM: LAYOUT
SURFACE PREP.: OPEN HOLES: 15/16ø
PAINT:

APPROVAL	DRAWN WCG 1-20-16	SHEET NO.	JOB NO.
SHOP	CHECKED CS 1-27-16	TD2	651

1500-3

LYOT-1500B

Sheet TD2 - Plotted: 03/14/2016 @ 09:42 (HEATHER)

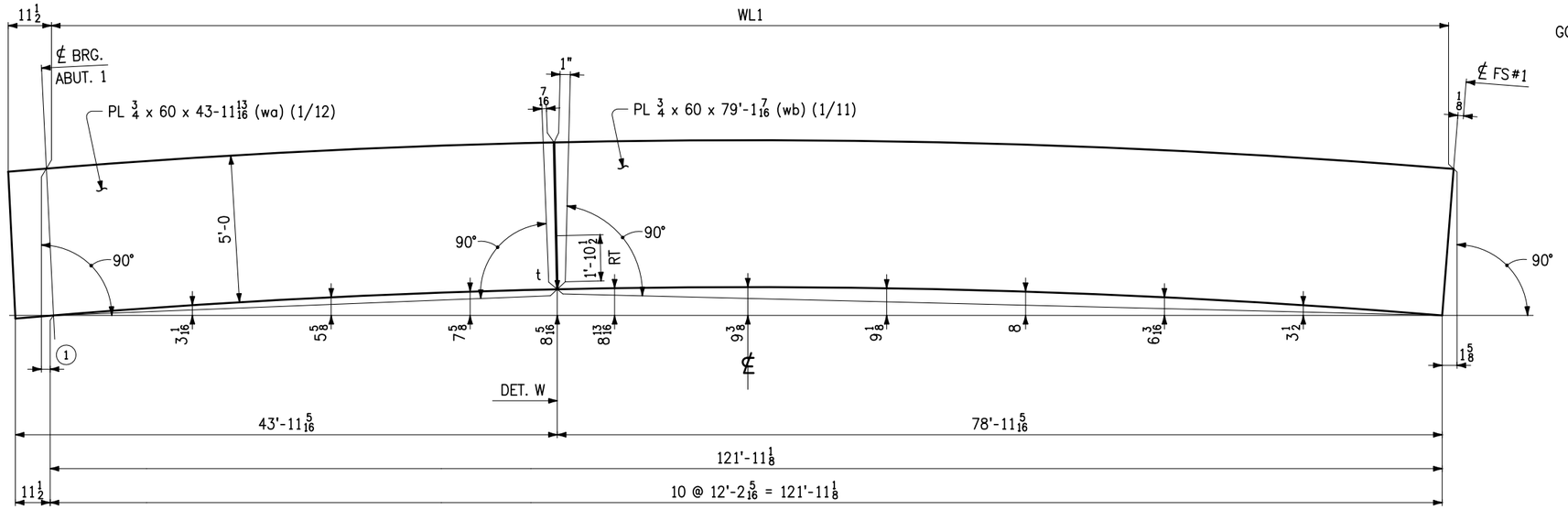

CAMBER DIAGRAM FOR 1G1A ℄ 5G5A

MARK	WL1	TF1	①
1G1A	122'-1 1/16	46'-0 11/16	5/16
5G5A	122'-1 3/8	46'-1	5/8

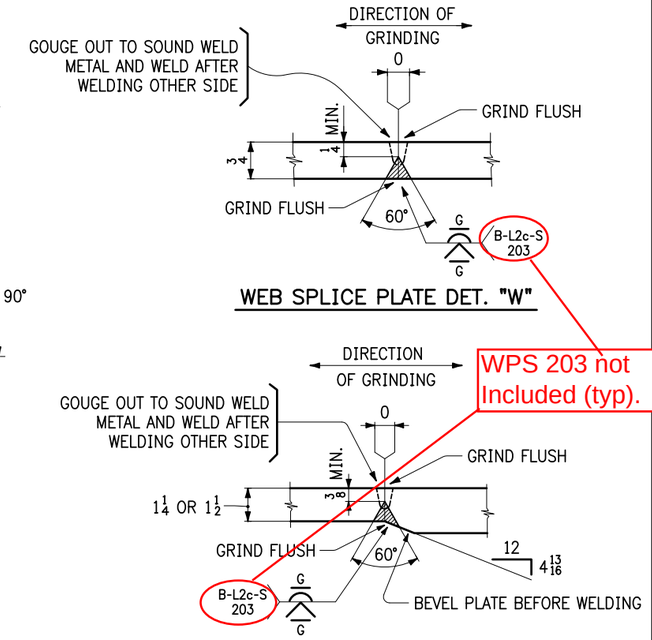

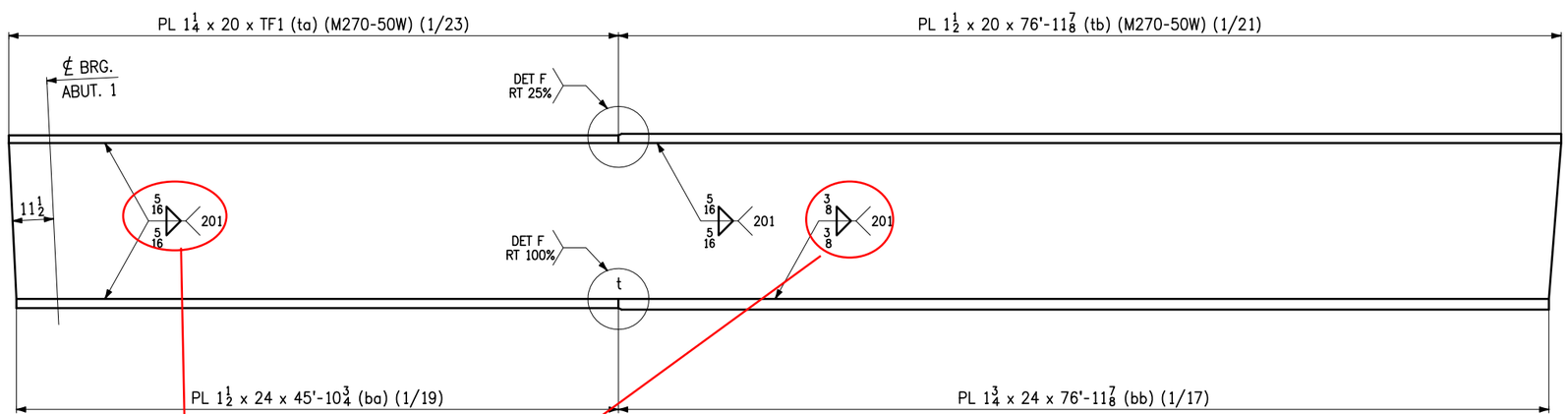

FLANGE DIAGRAM FOR 1G1A ℄ 5G5A

3/8" Fillet in the 2F position is a multi pass weld. How will this transition from the single pass 5/16"?? (TYP)

NOTES:

1. MAT'L: M270-50WT2 (UN).
2. FOR GENERAL NOTES SEE SHT. GN1.
3. "t" INDICATES WELDS SUBJECT TO TENSION.
4. "RT" DENOTES RADIOGRAPHIC INSPECTION. DIMENSION SHOWN IS 1/6 THE WEB DEPTH PLUS 25% OF THE REMAINDER.

NO.	DATE	REMARKS	BY

REVISIONS

CASCO BAY STEEL STRUCTURES
ONE WALLACE AVENUE
SOUTH PORTLAND, ME 04106
PHONE: 207-780-6722
FAX: 207-780-6726

STRUCTURE: VT 100 OVER MAD RIVER
LOCATION: TOWN OF WAITSFIELD, VERMONT
PROJECT NO.: PROJECT NO. BRF 013-4(39) BRIDGE NO. 177
ENGINEER: MCFARLAND JOHNSON
CUSTOMER: A.L. ST. ONGE CONTRACTOR, INC.
ITEM: WEB ℄ FLANGE CUTTING DIAGRAMS
SURFACE PREP.: OPEN HOLES
PAINT:

APPROVAL	DRAWN DMM 1-25-16	SHEET NO.	JOB NO.
SHOP	CHECKED FM 3-7-16	C1	651

1500-4 WC-1500A

Sheet C1 - Plotted: 03/14/2016 @ 09:41 (HEATHER)

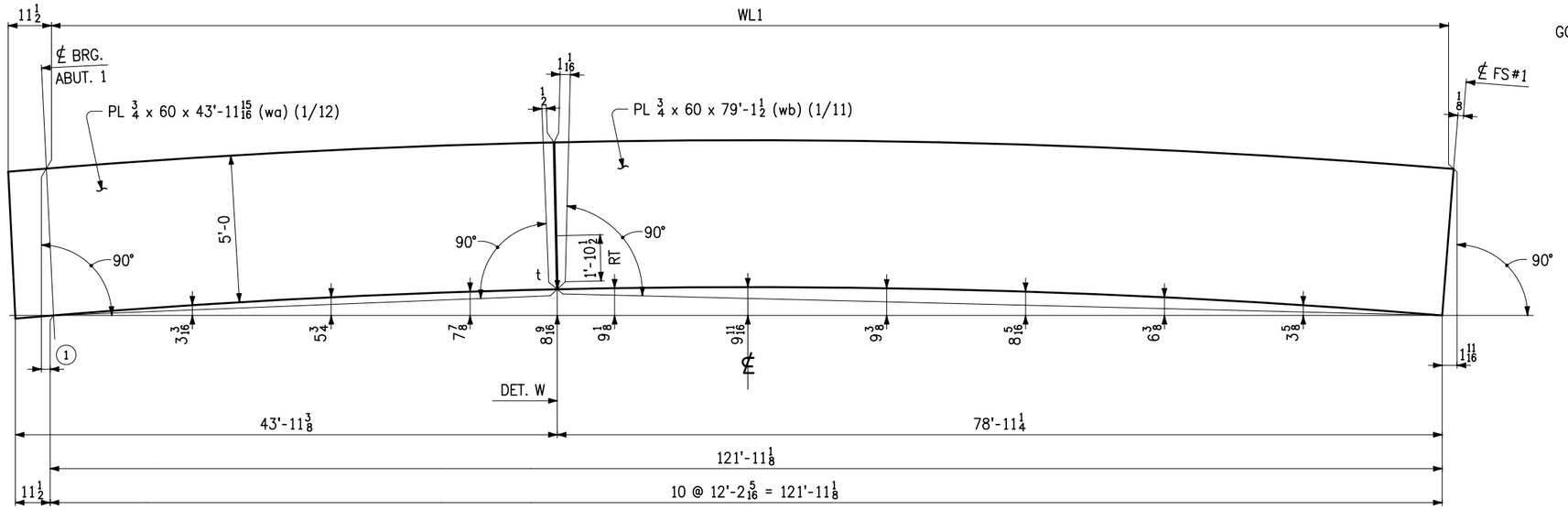

CAMBER DIAGRAM FOR 2G2A, 3G3A ℄ 4G4A

MARK	WL1	TL1	①
2G2A	122'-1 1/4	46'-0 7/8	7/16
3G3A	122'-1 3/8	46'-1	9/16
4G4A	122'-1 7/16	46'-1 1/16	5/8

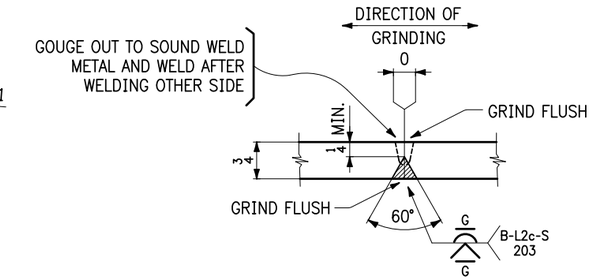

WEB SPLICE PLATE DET. "W"

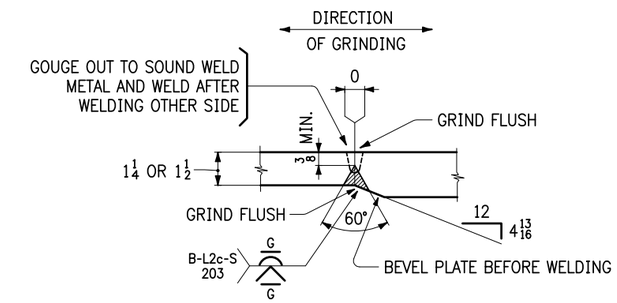

FLANGE PLATE SPLICE DETAIL "F"

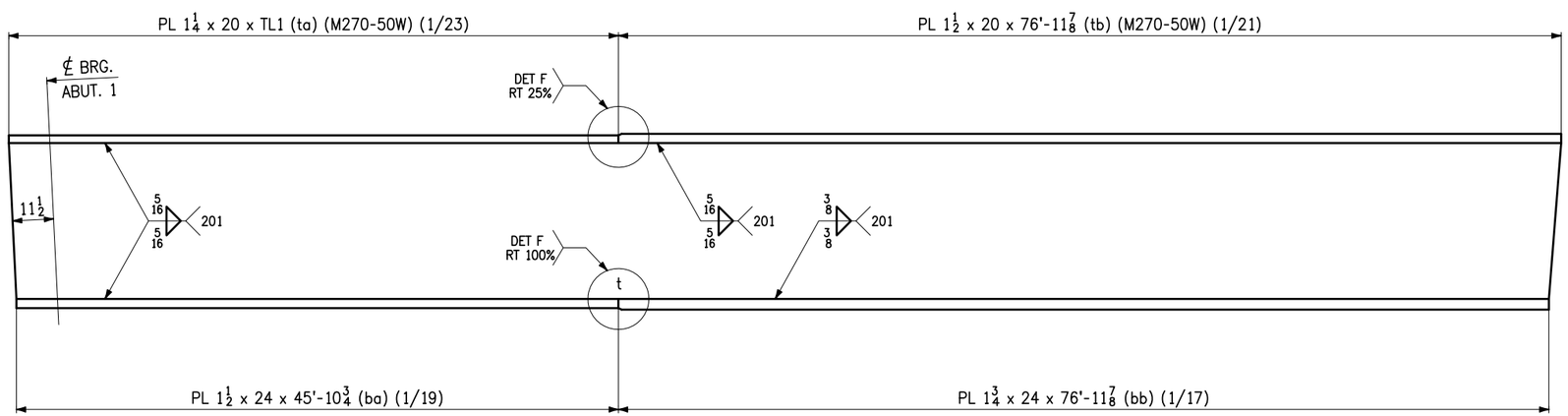

FLANGE DIAGRAM FOR 2G2A, 3G3A ℄ 4G4A

NOTES:

1. MAT'L: M270-50WT2 (UN).
2. FOR GENERAL NOTES SEE SHT. GN1.
3. "t" INDICATES WELDS SUBJECT TO TENSION.
4. "RT" DENOTES RADIOGRAPHIC INSPECTION. DIMENSION SHOWN IS 1/6 THE WEB DEPTH PLUS 25% OF THE REMAINDER.

NO.	DATE	REMARKS	BY

REVISIONS

CASCO BAY STEEL STRUCTURES
ONE WALLACE AVENUE
SOUTH PORTLAND, ME 04106
PHONE: 207-780-6722
FAX: 207-780-6726

STRUCTURE: VT 100 OVER MAD RIVER
LOCATION: TOWN OF WAITSFIELD, VERMONT
PROJECT NO.: PROJECT NO. BRF 013-4(39) BRIDGE NO. 177
ENGINEER: MCFARLAND JOHNSON
CUSTOMER: A.L. ST. ONGE CONTRACTOR, INC.
ITEM: WEB ℄ FLANGE CUTTING DIAGRAMS
SURFACE PREP.: OPEN HOLES
PAINT:

APPROVAL	DRAWN DMM 1-25-16	SHEET NO.	JOB NO.
SHOP	CHECKED FM 3-7-16	C2	651

1500-4 WC-1500B

Sheet C2 - Plotted: 03/14/2016 @ 09:41 (HEATHER)

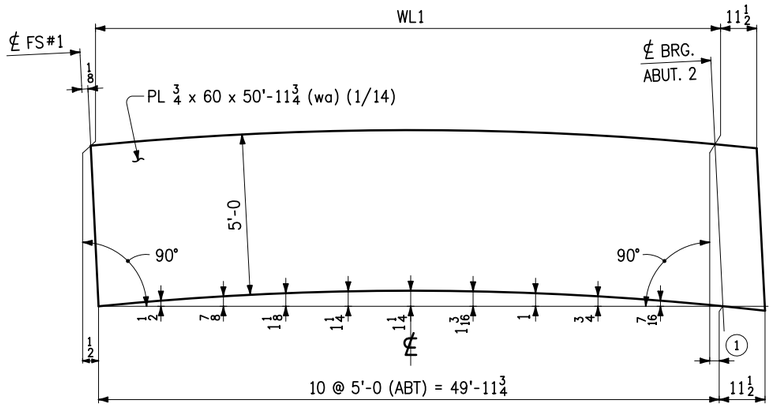

CAMBER DIAGRAM FOR 6G1B ℄ 10G5B

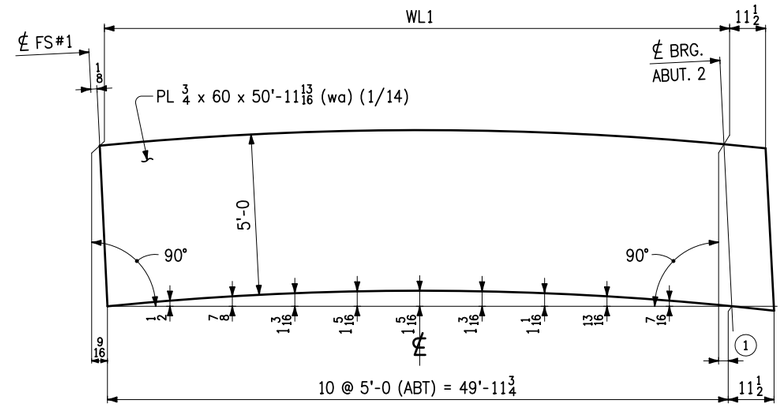

CAMBER DIAGRAM FOR 7G2B, 8G3B, ℄ 9G4B

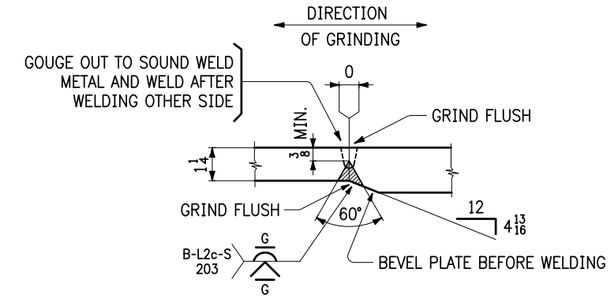

FLANGE PLATE SPLICE DETAIL "FA"

MARK	WL1	TF2	1	M1
6G1B	50'-0	45'-11 5/8	1/4	2/3
10G5B	49'-11 11/16	45'-11 5/16	9/16	2/4

MARK	WL1	TF2	1
7G2B	50'-0 1/16	45'-11 11/16	1/4
8G3B	49'-11 15/16	45'-11 9/16	3/8
9G4B	49'-11 7/8	45'-11 1/2	7/16

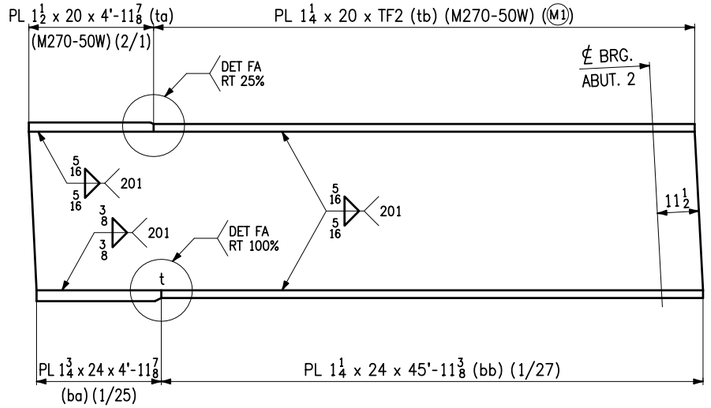

FLANGE DIAGRAM FOR 6G1B ℄ 10G5B

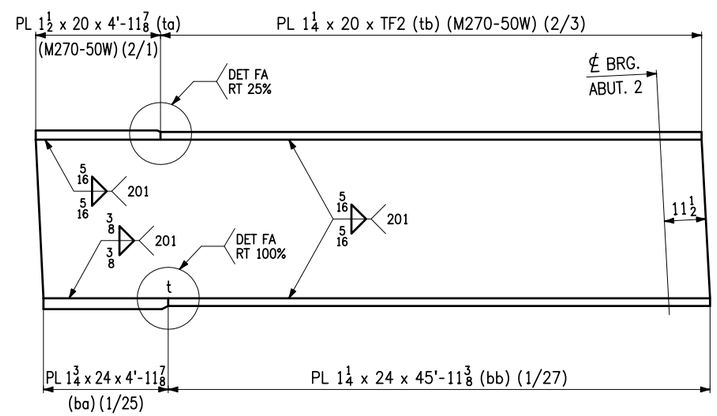

FLANGE DIAGRAM FOR 7G2B, 8G3B, ℄ 9G4B

NOTES:

1. MAT'L: M270-50WT2 (UN).
2. FOR GENERAL NOTES SEE SHT. GN1.
3. "t" INDICATES WELDS SUBJECT TO TENSION.

NO.	DATE	REMARKS	BY

REVISIONS

CASCO BAY STEEL STRUCTURES
ONE WALLACE AVENUE
SOUTH PORTLAND, ME 04106
PHONE: 207-780-6722
FAX: 207-780-6726

STRUCTURE: VT 100 OVER MAD RIVER
LOCATION: TOWN OF WAITSFIELD, VERMONT
PROJECT NO.: PROJECT NO. BRF 013-4(39) BRIDGE NO. 177
ENGINEER: MCFARLAND JOHNSON
CUSTOMER: A.L. ST. ONGE CONTRACTOR, INC.
ITEM: WEB ℄ FLANGE CUTTING DIAGRAMS
SURFACE PREP.: OPEN HOLES:
PAINT:

APPROVAL	DRAWN DMM 1-25-16	SHEET NO.	JOB NO.
SHOP	CHECKED FM 3-7-16	C3	651

1500-4 WC-1500C

Sheet C3 - Plotted: 03/14/2016 @ 09:41 (HEATHER)

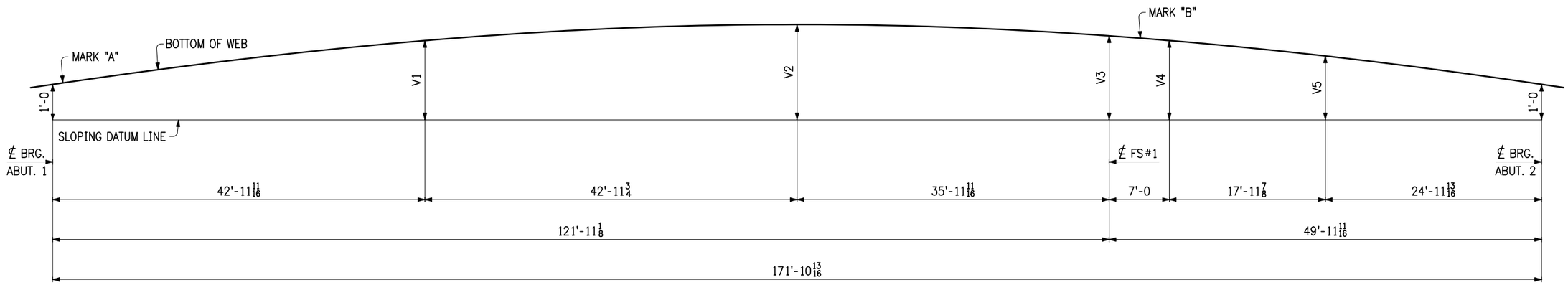

BLOCKING DIAGRAMS

LINE	V1	V2	V3	V4	V5
1 ℄ 5	2'-1 5/8	2'-6 5/8	2'-3 1/8	2'-1 5/8	1'-8 13/16
2, 3 ℄ 4	2'-2 1/16	2'-7 1/4	2'-3 5/8	2'-2 1/16	1'-9 1/8

NOTES:

1. FOR GENERAL NOTES, SEE DWG. GN1.
2. ALL DIMENSIONS GIVEN AT BOTTOM OF WEB.

NO.	DATE	REMARKS	BY

REVISIONS

CASCO BAY STEEL STRUCTURES
ONE WALLACE AVENUE
SOUTH PORTLAND, ME 04106
PHONE: 207-780-6722
FAX: 207-780-6726

STRUCTURE: VT 100 OVER MAD RIVER
LOCATION: TOWN OF WAITSFIELD, VERMONT
PROJECT NO.: PROJECT NO. BRF 013-4(39) BRIDGE NO. 177
ENGINEER: MCFARLAND JOHNSON
CUSTOMER: A.L. ST. ONGE CONTRACTOR, INC.
ITEM: SHOP ASSEMBLY DIAGRAMS
SURFACE PREP.: OPEN HOLES
PAINT:

APPROVAL	DRAWN DMM 1-25-16	SHEET NO.	JOB NO.
SHOP	CHECKED GDC 1-28-16	SA1	651

Sheet SA1 - Plotted: 03/14/2016 @ 09:41 (HEATHER)

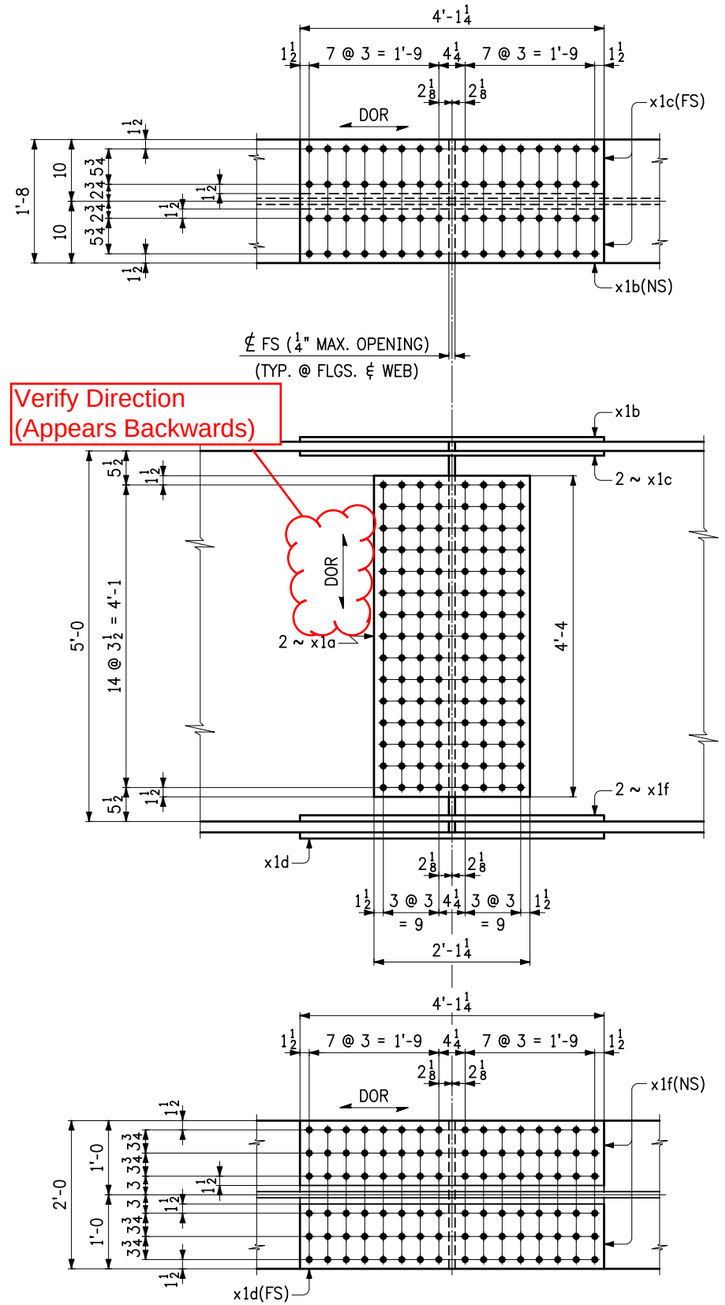

5 ~ FIELD SPLICE ~ X1M1

LINE	NO. OF PCS.	SHIP MARK	ASS'Y MARK	MATERIAL SHAPE	SECTION	LENGTH FT.	LENGTH IN.	MATERIAL SPEC.	ITEM NO.	REMARKS
1	5	X1M1			FIELD SPLICE					1392 lbs. ea.
2	10		x1a	PL	1/2 x 25 1/4	4	4	M270-50WT2	3/2	372 lbs.
3	5		x1b	PL	3/4 x 20	4	1 1/4	M270-50WT2	3/4	209 lbs.
4	10		x1c	PL	3/4 x 8 3/4	4	1 1/4	M270-50WT2	3/6	183 lbs.
5	5		x1d	PL	1 x 24	4	1 1/4	M270-50WT2	3/8	335 lbs.
6	10		x1f	PL	1 x 10 1/2	4	1 1/4	M270-50WT2	3/10	293 lbs.
7										
8										
9										
10										
11										
12										
13										
14										
15										
16										
17										
18										
19										
20										
21										
22										
23										
24										
25										

NOTES:

1. FOR GENERAL NOTES, SEE SHT. GN1.
2. HOLES IN SPLICE PLATES ARE PRE-DRILLED. ENDS OF GIRDERS ARE DRILLED FROM SOLID USING SPLICE PLATES AS A TEMPLATE.
3. DOR ⟵⟶ DENOTES DIRECTION OF MILL ROLLING.

NO.	DATE	REMARKS	BY

REVISIONS

CASCO BAY STEEL STRUCTURES

CASCO BAY STEEL STRUCTURES
ONE WALLACE AVENUE
SOUTH PORTLAND, ME 04106
PHONE: 207-780-6722
FAX: 207-780-6726

STRUCTURE: VT 100 OVER MAD RIVER
LOCATION: TOWN OF WAITSFIELD, VERMONT
PROJECT NO.: PROJECT NO. BRF 013-4(39) BRIDGE NO. 177
ENGINEER: MCFARLAND JOHNSON
CUSTOMER: A.L. ST. ONGE CONTRACTOR, INC.
ITEM: FIELD SPLICE DETAILS
SURFACE PREP.: SSPC-SP10 OPEN HOLES: 15/16Ø
PAINT: NONE

APPROVAL	DRAWN VHM 1-26-16	SHEET NO.	JOB NO.
SHOP	CHECKED FM 3-8-16	X1	651

1500-9 FS1-1500

Sheet X1 - Plotted: 03/14/2016 @ 09:42 (HEATHER)

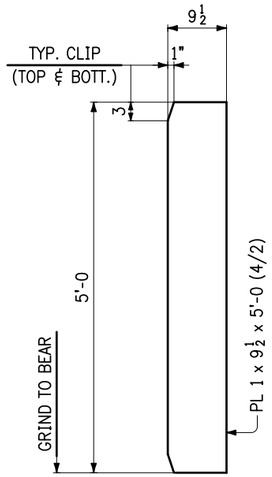

DET. OF PC. ~ x2a

(4 ~ REQ'D)
(@ ABUT. 1 & 2 - FASCIA)

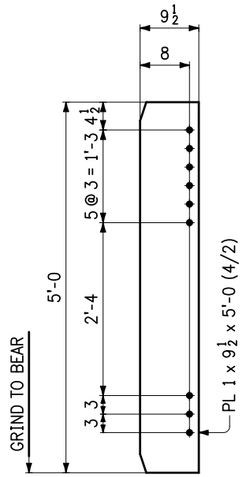

DET. OF PC. ~ x2b

(4 ~ REQ'D)
(@ ABUT. 1 - CONN. PL)
(LOW)

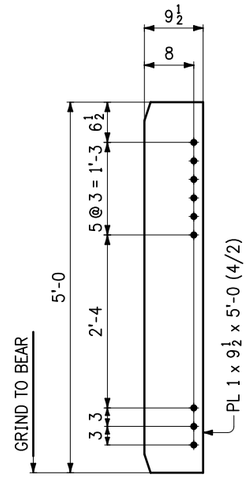

DET. OF PC. ~ x2c

(4 ~ REQ'D)
(@ ABUT. 1 - CONN. PL)
(HIGH)

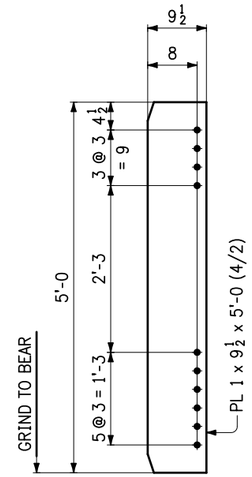

DET. OF PC. ~ x2d

(8 ~ REQ'D)
(@ ABUT. 2 - CONN. PL)

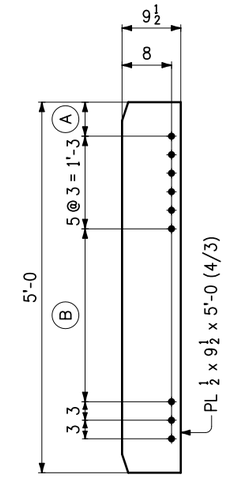

(@ INT. - CONN. PL)

MARK	No. REQ'D.	(A)	(B)	DROP
x2f	2	$5\frac{3}{16}$	$2'\text{-}5\frac{5}{16}$	($1\frac{11}{16}$ HIGH)
x2g	2	$4\frac{1}{2}$	$2'\text{-}5\frac{5}{16}$	($1\frac{11}{16}$ LOW)
x2k	4	$5\frac{3}{8}$	$2'\text{-}5\frac{1}{8}$	($\frac{7}{8}$ HIGH)
x2m	4	$4\frac{1}{2}$	$2'\text{-}5\frac{1}{8}$	($\frac{7}{8}$ LOW)
x2n	4	$5\frac{5}{8}$	$2'\text{-}4\frac{7}{8}$	($1\frac{1}{8}$ HIGH)
x2p	4	$4\frac{1}{2}$	$2'\text{-}4\frac{7}{8}$	($1\frac{1}{8}$ LOW)
x2t	4	6	$2'\text{-}4\frac{1}{2}$	($1\frac{1}{2}$ HIGH)
x2v	4	$4\frac{1}{2}$	$2'\text{-}4\frac{1}{2}$	($1\frac{1}{2}$ LOW)
x2w	2	$6\frac{5}{16}$	$2'\text{-}4\frac{3}{16}$	($1\frac{13}{16}$ HIGH)

(@ INT. - CONN. PL)

MARK	No. REQ'D.	(A)	(B)	DROP
x2y	2	$4\frac{1}{2}$	$2'\text{-}4\frac{3}{16}$	($1\frac{13}{16}$ LOW)
x2aa	4	$6\frac{9}{16}$	$2'\text{-}3\frac{15}{16}$	($2\frac{1}{16}$ HIGH)
x2ab	4	$4\frac{1}{2}$	$2'\text{-}3\frac{15}{16}$	($2\frac{1}{16}$ LOW)
x2ac	4	$6\frac{7}{8}$	$2'\text{-}3\frac{5}{8}$	($2\frac{3}{8}$ HIGH)
x2ad	4	$4\frac{1}{2}$	$2'\text{-}3\frac{5}{8}$	($2\frac{3}{8}$ LOW)
x2af	4	$7\frac{1}{8}$	$2'\text{-}3\frac{3}{8}$	($2\frac{5}{8}$ HIGH)
x2ag	4	$4\frac{1}{2}$	$2'\text{-}3\frac{3}{8}$	($2\frac{5}{8}$ LOW)
x2ak	8	$7\frac{3}{8}$	$2'\text{-}3\frac{1}{8}$	($2\frac{7}{8}$ HIGH)
x2am	8	$4\frac{1}{2}$	$2'\text{-}3\frac{1}{8}$	($2\frac{7}{8}$ LOW)

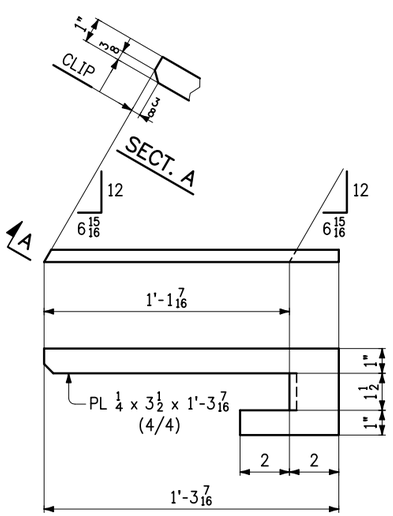

DRIP BAR ~ x2an

(1 ~ REQ'D)
(@ ABUT. 1 - LINE 1)

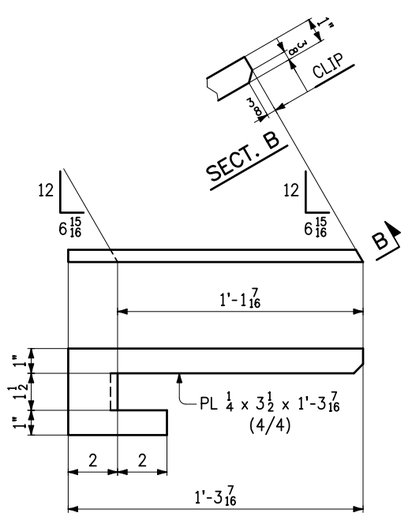

DRIP BAR ~ x2ap

(1 ~ REQ'D)
(@ ABUT. 1 - LINE 5)

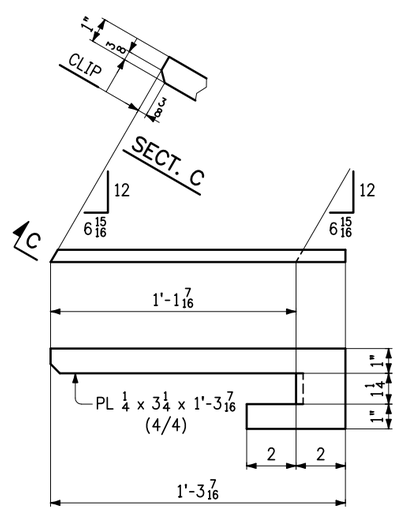

DRIP BAR ~ x2at

(1 ~ REQ'D)
(@ ABUT. 2 - LINE 5)

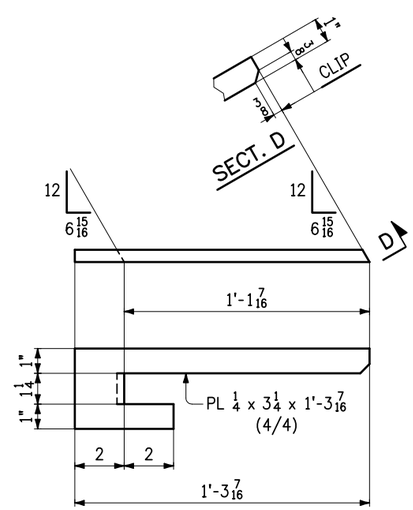

DRIP BAR ~ x2av

(1 ~ REQ'D)
(@ ABUT. 2 - LINE 1)

NOTES:

1. FOR GENERAL NOTES, SEE SHT. GN1.
2. MATERIAL TO BE M270-50W.

NO.	DATE	REMARKS	BY

REVISIONS

CASCO BAY STEEL STRUCTURES

CASCO BAY STEEL STRUCTURES
ONE WALLACE AVENUE
SOUTH PORTLAND, ME 04106
PHONE: 207-780-6722
FAX: 207-780-6726

STRUCTURE: VT 100 OVER MAD RIVER
LOCATION: TOWN OF WAITSFIELD, VERMONT
PROJECT NO.: PROJECT NO. BRF 013-4(39) BRIDGE NO. 177
ENGINEER: MCFARLAND JOHNSON
CUSTOMER: A.L. ST. ONGE CONTRACTOR, INC.
ITEM: GIRDER STANDARDS
SURFACE PREP.: —— OPEN HOLES: $\frac{15}{16}$Ø
PAINT: ——

APPROVAL	DRAWN VMM 1-26-16	SHEET NO.	JOB NO.
SHOP	CHECKED FM 3-8-16	X2	651

1500-9

STD1-1500

Sheet X2 - Plotted: 03/14/2016 @ 09:42 (HEATHER)

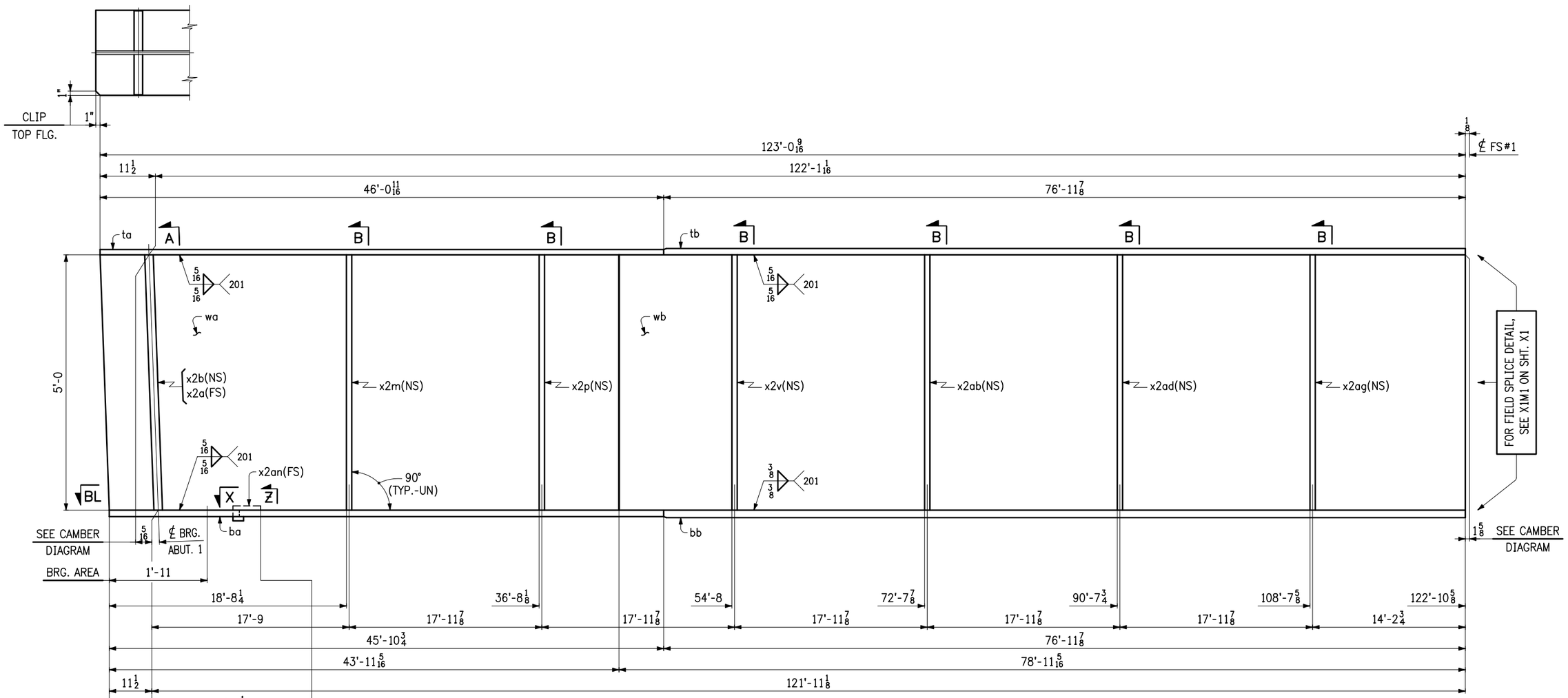

ONE ~ GIRDER ~ 1G1A

- FOR GIRDER STANDARD DETAILS, SEE SHT. X2.
- FOR WEB CUTTING DIAGRAM, SEE SHT. C1.
- FOR FLANGE CUTTING DIAGRAMS, SEE SHT. C1.
- FOR GENERAL NOTES, SEE SHT. GN1.
- "BRG. AREA" INDICATES AREA THAT MUST BE FLAT TO PROVIDE A UNIFORM EVEN CONTACT WITH SOLE PLATE.

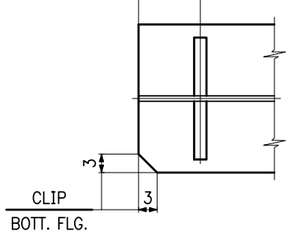

SECT. BL

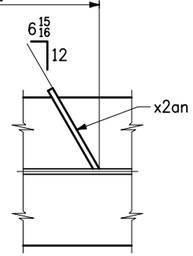

SECT. X

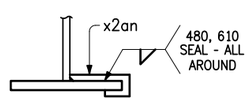

SECT. Z

NO.	DATE	REMARKS	BY

REVISIONS

CASCO BAY STEEL STRUCTURES

CASCO BAY STEEL STRUCTURES
ONE WALLACE AVENUE
SOUTH PORTLAND, ME 04106
PHONE: 207-780-6722
FAX: 207-780-6726

STRUCTURE: VT 100 OVER MAD RIVER
LOCATION: TOWN OF WAITSFIELD, VERMONT
PROJECT NO.: PROJECT NO. BRF 013-4(39) BRIDGE NO. 177
ENGINEER: MCFARLAND JOHNSON
CUSTOMER: A.L. ST. ONGE CONTRACTOR, INC.
ITEM: GIRDER ~ 1G1A
SURFACE PREP.: SSPC-SP10 OPEN HOLES: 15/16 Ø
PAINT: NONE

APPROVAL	DRAWN VHM 1-27-16	SHEET NO.	JOB NO.
SHOP	CHECKED FM 3-8-16	1AB	651

Sheet 01AB - Plotted: 03/14/2016 @ 09:42 (HEATHER)

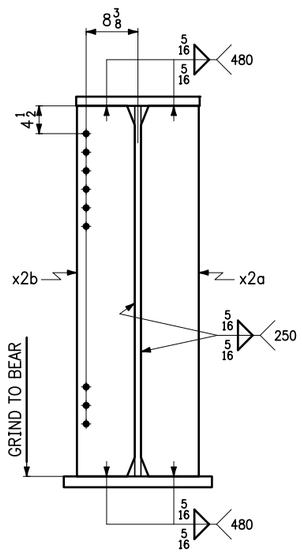

SECT. A

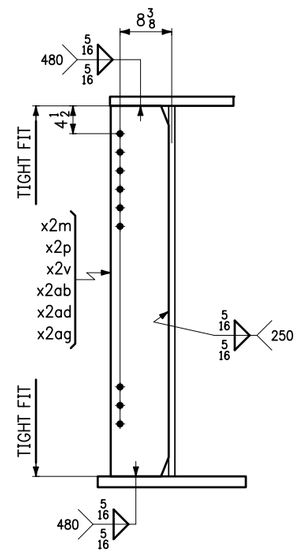

SECT. B

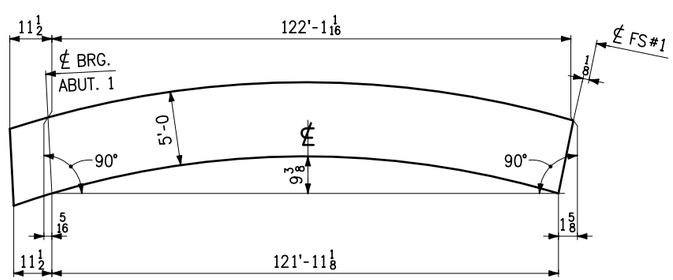

CAMBER DIAGRAM

LINE	NO. OF PCS.	SHIP MARK	ASS'Y MARK	MATERIAL SHAPE	SECTION	LENGTH FT.	LENGTH IN.	MATERIAL SPEC.	ITEM NO.	REMARKS
1	1	1G1A			GIRDER					48,066 lbs.
2	1		wa	PL	3/4 x 60	43	11 13/16	M270-50WT2	1/12	6735 lbs.
3	1		wb	PL	3/4 x 60	79	1 7/16	M270-50WT2	1/11	12,115 lbs.
4	1		ta	PL	1 1/4 x 20	46	0 11/16	M270-50W	1/23	3918 lbs.
5	1		tb	PL	1 1/2 x 20	76	11 7/8	M270-50W	1/21	7859 lbs.
6	1		ba	PL	1 1/2 x 24	45	10 3/4	M270-50WT2	1/19	5622 lbs.
7	1		bb	PL	1 3/4 x 24	76	11 7/8	M270-50WT2	1/17	11,003 lbs.
8										
9	1		x2a	PL	1 x 9 1/2	5	0	M270-50W	4/2	G1E 162 lbs.
10	1		x2b	PL	1 x 9 1/2	5	0	M270-50W	4/2	G1E 162 lbs.
11	1		x2m	PL	1/2 x 9 1/2	5	0	M270-50W	4/3	81 lbs.
12	1		x2p	PL	1/2 x 9 1/2	5	0	M270-50W	4/3	81 lbs.
13	1		x2v	PL	1/2 x 9 1/2	5	0	M270-50W	4/3	81 lbs.
14	1		x2ab	PL	1/2 x 9 1/2	5	0	M270-50W	4/3	81 lbs.
15	1		x2ad	PL	1/2 x 9 1/2	5	0	M270-50W	4/3	81 lbs.
16	1		x2ag	PL	1/2 x 9 1/2	5	0	M270-50W	4/3	81 lbs.
17	1		x2an	PL	1/4 x 3 1/2	1	3 7/16	M270-50W	4/4	4 lbs.
18										
19										
20										
21										
22										
23										
24										
25										

NO.	DATE	REMARKS	BY

REVISIONS

CASCO BAY STEEL STRUCTURES
ONE WALLACE AVENUE
SOUTH PORTLAND, ME 04106
PHONE: 207-780-6722
FAX: 207-780-6726

STRUCTURE: VT 100 OVER MAD RIVER
LOCATION: TOWN OF WAITSFIELD, VERMONT
PROJECT NO.: PROJECT NO. BRF 013-4(39) BRIDGE NO. 177
ENGINEER: MCFARLAND JOHNSON
CUSTOMER: A.L. ST. ONGE CONTRACTOR, INC.
ITEM: GIRDER ~ 1G1A
SURFACE PREP.: SSPC-SP10 OPEN HOLES: 15/16ø
PAINT: NONE

APPROVAL	DRAWN VMM 1-27-16	SHEET NO.	JOB NO.
SHOP	CHECKED FM 3-9-16	1B	651

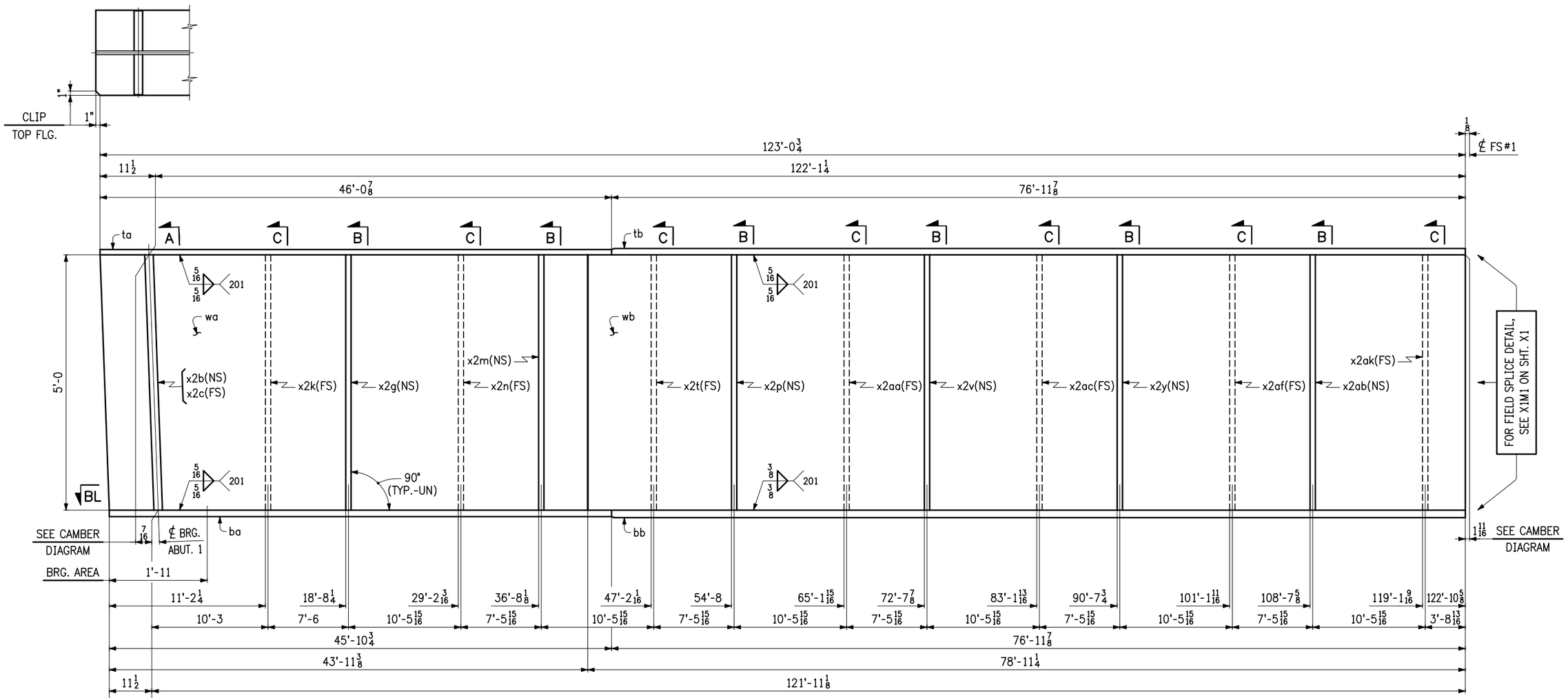

ONE ~ GIRDER ~ 2G2A

- FOR GIRDER STANDARD DETAILS, SEE SHT. X2.
- FOR WEB CUTTING DIAGRAM, SEE SHT. C2.
- FOR FLANGE CUTTING DIAGRAMS, SEE SHT. C2.
- FOR GENERAL NOTES, SEE SHT. GN1.
- "BRG. AREA" INDICATES AREA THAT MUST BE FLAT TO PROVIDE A UNIFORM EVEN CONTACT WITH SOLE PLATE.

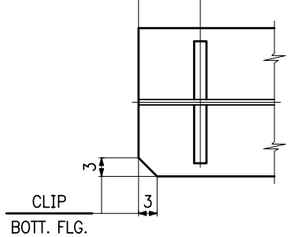

SECT. BL

NO.	DATE	REMARKS	BY

REVISIONS

CASCO BAY STEEL STRUCTURES
ONE WALLACE AVENUE
SOUTH PORTLAND, ME 04106
PHONE: 207-780-6722
FAX: 207-780-6726

STRUCTURE: VT 100 OVER MAD RIVER
LOCATION: TOWN OF WAITSFIELD, VERMONT
PROJECT NO.: PROJECT NO. BRF 013-4(39) BRIDGE NO. 177
ENGINEER: MCFARLAND JOHNSON
CUSTOMER: A.L. ST. ONGE CONTRACTOR, INC.
ITEM: GIRDER ~ 2G2A
SURFACE PREP.: SSPC-SP10 OPEN HOLES: 15/16 Ø
PAINT: NONE

APPROVAL	DRAWN VHM 1-27-16	SHEET NO.	JOB NO.
SHOP	CHECKED FM 3-9-16	2AB	651

Sheet 02AB - Plotted: 03/14/2016 @ 09:43 (HEATHER)

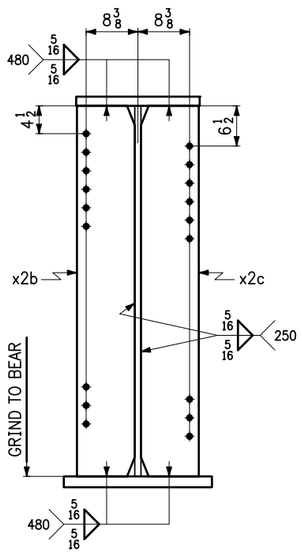

SECT. A

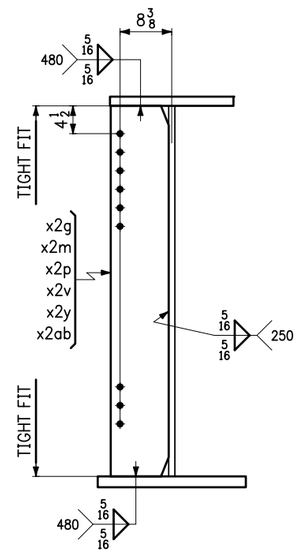

SECT. B

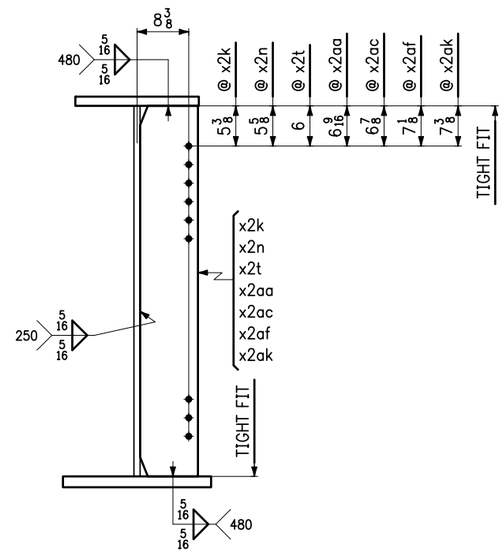

SECT. C

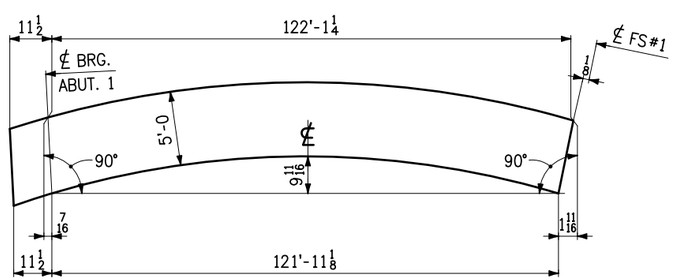

CAMBER DIAGRAM

LINE	NO. OF PCS.	SHIP MARK	ASS'Y MARK	MATERIAL SHAPE	SECTION	LENGTH FT.	LENGTH IN.	MATERIAL SPEC.	ITEM NO.	REMARKS
1	1	2G2A			GIRDER					48,633 lbs.
2	1		wa	PL	3/4 x 60	43	11 15/16	M270-50WT2	1/12	6737 lbs.
3	1		wb	PL	3/4 x 60	79	1 1/2	M270-50WT2	1/11	12,116 lbs.
4	1		ta	PL	1 1/4 x 20	46	0 7/8	M270-50W	1/23	3919 lbs.
5	1		tb	PL	1 1/2 x 20	76	11 7/8	M270-50W	1/21	7859 lbs.
6	1		ba	PL	1 1/2 x 24	45	10 3/4	M270-50WT2	1/19	5622 lbs.
7	1		bb	PL	1 3/4 x 24	76	11 7/8	M270-50WT2	1/17	11,003 lbs.
8										
9	1		x2b	PL	1 x 9 1/2	5	0	M270-50W	4/2	G1E 162 lbs.
10	1		x2c	PL	1 x 9 1/2	5	0	M270-50W	4/2	G1E 162 lbs.
11	1		x2g	PL	1/2 x 9 1/2	5	0	M270-50W	4/3	81 lbs.
12	1		x2k	PL	1/2 x 9 1/2	5	0	M270-50W	4/3	81 lbs.
13	1		x2m	PL	1/2 x 9 1/2	5	0	M270-50W	4/3	81 lbs.
14	1		x2n	PL	1/2 x 9 1/2	5	0	M270-50W	4/3	81 lbs.
15	1		x2p	PL	1/2 x 9 1/2	5	0	M270-50W	4/3	81 lbs.
16	1		x2t	PL	1/2 x 9 1/2	5	0	M270-50W	4/3	81 lbs.
17	1		x2v	PL	1/2 x 9 1/2	5	0	M270-50W	4/3	81 lbs.
18	1		x2y	PL	1/2 x 9 1/2	5	0	M270-50W	4/3	81 lbs.
19	1		x2aa	PL	1/2 x 9 1/2	5	0	M270-50W	4/3	81 lbs.
20	1		x2ab	PL	1/2 x 9 1/2	5	0	M270-50W	4/3	81 lbs.
21	1		x2ac	PL	1/2 x 9 1/2	5	0	M270-50W	4/3	81 lbs.
22	1		x2af	PL	1/2 x 9 1/2	5	0	M270-50W	4/3	81 lbs.
23	1		x2ak	PL	1/2 x 9 1/2	5	0	M270-50W	4/3	81 lbs.
24										
25										

NO.	DATE	REMARKS	BY

REVISIONS

CASCO BAY STEEL STRUCTURES
ONE WALLACE AVENUE
SOUTH PORTLAND, ME 04106
PHONE: 207-780-6722
FAX: 207-780-6726

STRUCTURE: VT 100 OVER MAD RIVER
LOCATION: TOWN OF WAITSFIELD, VERMONT
PROJECT NO.: PROJECT NO. BRF 013-4(39) BRIDGE NO. 177
ENGINEER: MCFARLAND JOHNSON
CUSTOMER: A.L. ST. ONGE CONTRACTOR, INC.
ITEM: GIRDER ~ 2G2A
SURFACE PREP.: SSPC-SP10 OPEN HOLES: 15/16ø
PAINT: NONE

APPROVAL	DRAWN VMM 1-27-16	SHEET NO.	JOB NO.
SHOP	CHECKED FM 3-9-16	2B	651

1500-9 G2A-1500B

Sheet 02B - Plotted: 03/14/2016 @ 09:43 (HEATHER)

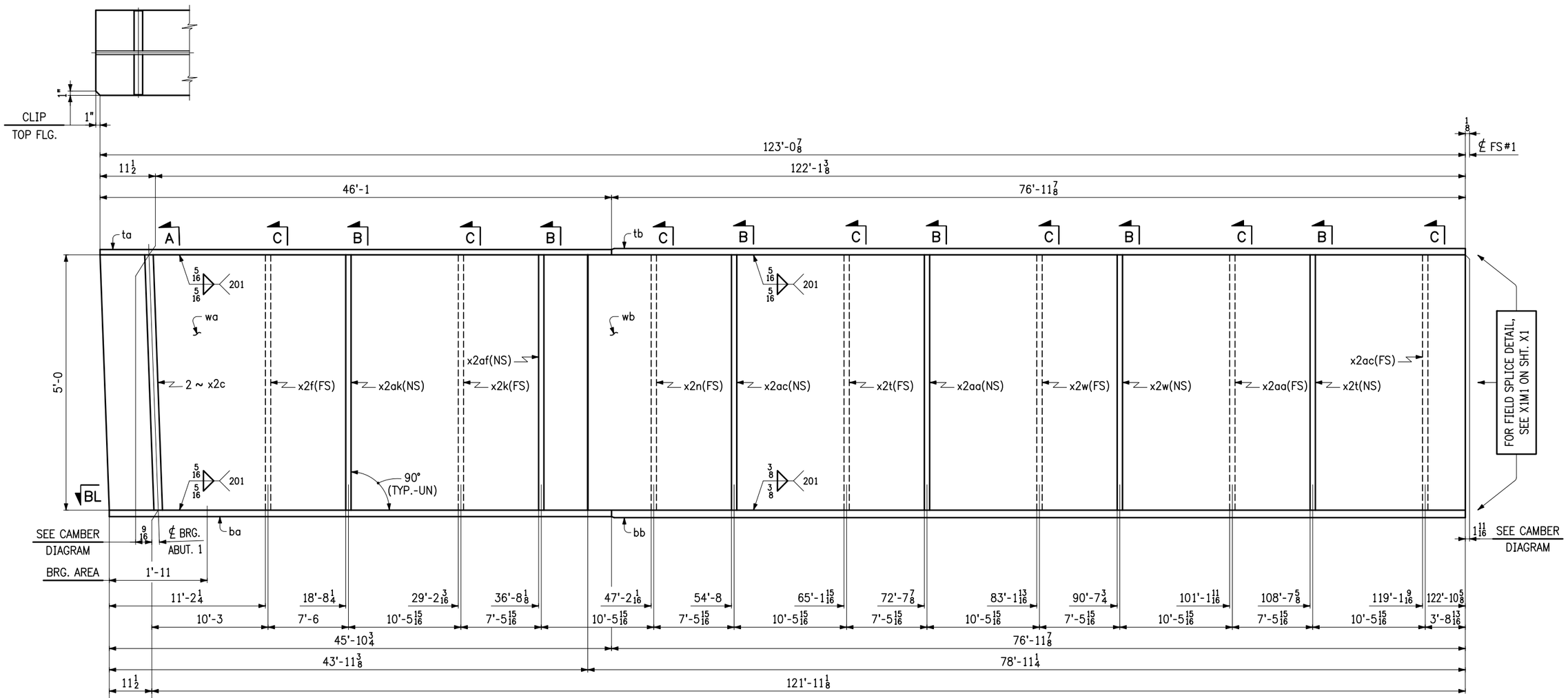

ONE ~ GIRDER ~ 3G3A

- FOR GIRDER STANDARD DETAILS, SEE SHT. X2.
- FOR WEB CUTTING DIAGRAM, SEE SHT. C2.
- FOR FLANGE CUTTING DIAGRAMS, SEE SHT. C2.
- FOR GENERAL NOTES, SEE SHT. GN1.
- "BRG. AREA" INDICATES AREA THAT MUST BE FLAT TO PROVIDE A UNIFORM EVEN CONTACT WITH SOLE PLATE.

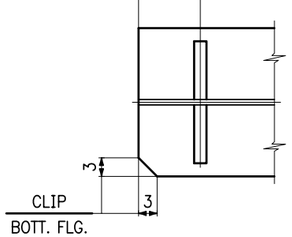

SECT. BL

NO.	DATE	REMARKS	BY

REVISIONS

CASCO BAY STEEL STRUCTURES

CASCO BAY STEEL STRUCTURES
ONE WALLACE AVENUE
SOUTH PORTLAND, ME 04106
PHONE: 207-780-6722
FAX: 207-780-6726

STRUCTURE: VT 100 OVER MAD RIVER
LOCATION: TOWN OF WAITSFIELD, VERMONT
PROJECT NO.: PROJECT NO. BRF 013-4(39) BRIDGE NO. 177
ENGINEER: MCFARLAND JOHNSON
CUSTOMER: A.L. ST. ONGE CONTRACTOR, INC.
ITEM: GIRDER ~ 3G3A
SURFACE PREP.: SSPC-SP10 OPEN HOLES: 15/16 Ø
PAINT: NONE

APPROVAL	DRAWN VHM 1-27-16	SHEET NO.	JOB NO.
SHOP	CHECKED FM 3-8-16	3AB	651

Sheet 03AB - Plotted: 03/14/2016 @ 09:43 (HEATHER)

LINE	NO. OF PCS.	SHIP MARK	ASS'Y MARK	MATERIAL SHAPE	SECTION	LENGTH FT.	LENGTH IN.	MATERIAL SPEC.	ITEM NO.	REMARKS
1	1	3G3A			GIRDER					48,634 lbs.
2	1		wa	PL	$\frac{3}{4}$ x 60	43	$11\frac{15}{16}$	M270-50WT2	1/12	6737 lbs.
3	1		wb	PL	$\frac{3}{4}$ x 60	79	$1\frac{1}{2}$	M270-50WT2	1/11	12,116 lbs.
4	1		ta	PL	$1\frac{1}{4}$ x 20	46	1	M270-50W	1/23	3920 lbs.
5	1		tb	PL	$1\frac{1}{2}$ x 20	76	$11\frac{7}{8}$	M270-50W	1/21	7859 lbs.
6	1		ba	PL	$1\frac{1}{2}$ x 24	45	$10\frac{3}{4}$	M270-50WT2	1/19	5622 lbs.
7	1		bb	PL	$1\frac{3}{4}$ x 24	76	$11\frac{7}{8}$	M270-50WT2	1/17	11,003 lbs.
8										
9	2		x2c	PL	1 x $9\frac{1}{2}$	5	0	M270-50W	4/2	G1E 324 lbs.
10	1		x2f	PL	$\frac{1}{2}$ x $9\frac{1}{2}$	5	0	M270-50W	4/3	81 lbs.
11	1		x2k	PL	$\frac{1}{2}$ x $9\frac{1}{2}$	5	0	M270-50W	4/3	81 lbs.
12	1		x2n	PL	$\frac{1}{2}$ x $9\frac{1}{2}$	5	0	M270-50W	4/3	81 lbs.
13	2		x2t	PL	$\frac{1}{2}$ x $9\frac{1}{2}$	5	0	M270-50W	4/3	162 lbs.
14	2		x2w	PL	$\frac{1}{2}$ x $9\frac{1}{2}$	5	0	M270-50W	4/3	162 lbs.
15	2		x2aa	PL	$\frac{1}{2}$ x $9\frac{1}{2}$	5	0	M270-50W	4/3	162 lbs.
16	2		x2ac	PL	$\frac{1}{2}$ x $9\frac{1}{2}$	5	0	M270-50W	4/3	162 lbs.
17	1		x2af	PL	$\frac{1}{2}$ x $9\frac{1}{2}$	5	0	M270-50W	4/3	81 lbs.
18	1		x2ak	PL	$\frac{1}{2}$ x $9\frac{1}{2}$	5	0	M270-50W	4/3	81 lbs.
19										
20										
21										
22										
23										
24										
25										

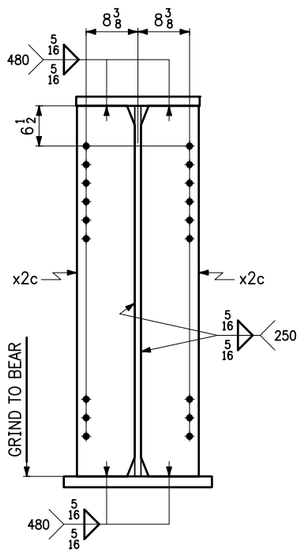

SECT. A

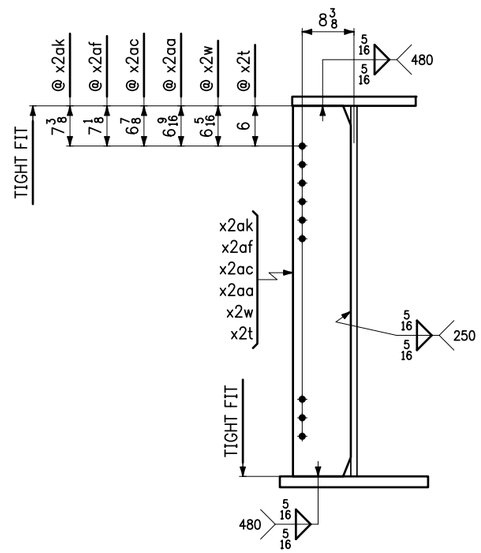

SECT. B

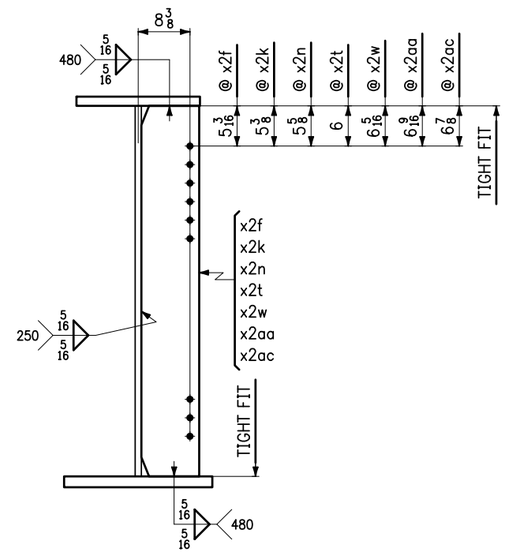

SECT. C

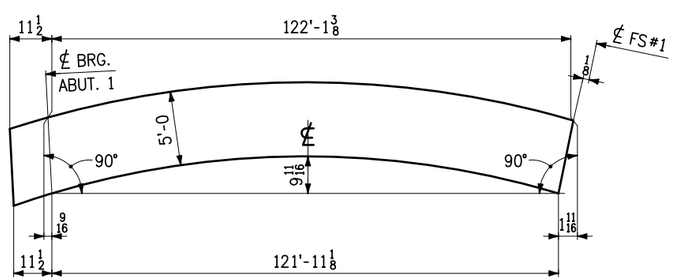

CAMBER DIAGRAM

NO.	DATE	REMARKS	BY

REVISIONS

CASCO BAY STEEL STRUCTURES

CASCO BAY STEEL STRUCTURES
ONE WALLACE AVENUE
SOUTH PORTLAND, ME 04106
PHONE: 207-780-6722
FAX: 207-780-6726

STRUCTURE: VT 100 OVER MAD RIVER
LOCATION: TOWN OF WAITSFIELD, VERMONT
PROJECT NO.: PROJECT NO. BRF 013-4(39) BRIDGE NO. 177
ENGINEER: MCFARLAND JOHNSON
CUSTOMER: A.L. ST. ONGE CONTRACTOR, INC.
ITEM: GIRDER ~ 3G3A
SURFACE PREP.: SSPC-SP10 OPEN HOLES: $\frac{15}{16}$ø
PAINT: NONE

APPROVAL	DRAWN VMM 1-27-16	SHEET NO.	JOB NO.
SHOP	CHECKED FM 3-8-16	3B	651

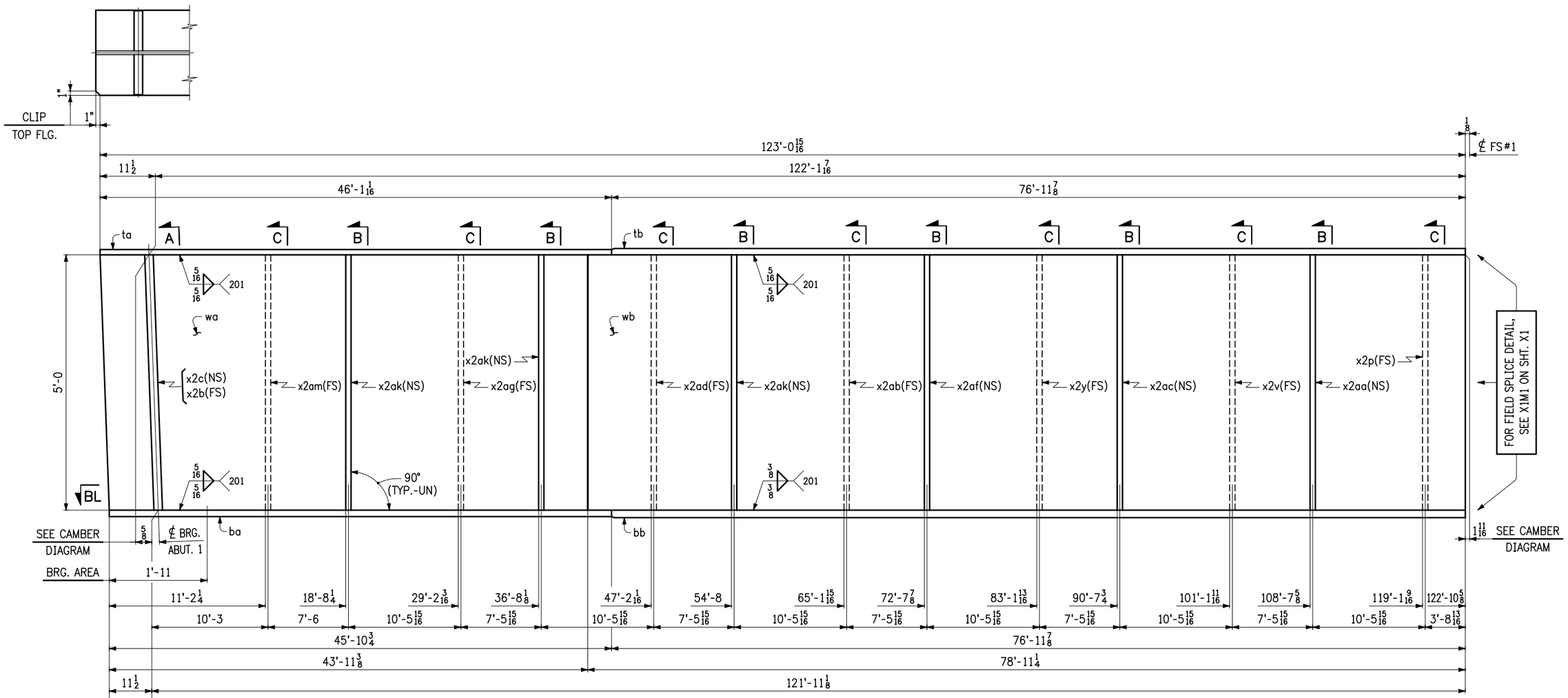

ONE ~ GIRDER ~ 4G4A

- FOR GIRDER STANDARD DETAILS, SEE SHT. X2.
- FOR WEB CUTTING DIAGRAM, SEE SHT. C2.
- FOR FLANGE CUTTING DIAGRAMS, SEE SHT. C2.
- FOR GENERAL NOTES, SEE SHT. GN1.
- "BRG. AREA" INDICATES AREA THAT MUST BE FLAT TO PROVIDE A UNIFORM EVEN CONTACT WITH SOLE PLATE.

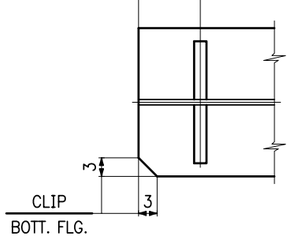

SECT. BL

NO.	DATE	REMARKS	BY

REVISIONS

CASCO BAY STEEL STRUCTURES
ONE WALLACE AVENUE
SOUTH PORTLAND, ME 04106
PHONE: 207-780-6722
FAX: 207-780-6726

STRUCTURE: VT 100 OVER MAD RIVER
LOCATION: TOWN OF WAITSFIELD, VERMONT
PROJECT NO.: PROJECT NO. BRF 013-4(39) BRIDGE NO. 177
ENGINEER: MCFARLAND JOHNSON
CUSTOMER: A.L. ST. ONGE CONTRACTOR, INC.
ITEM: GIRDER ~ 4G4A
SURFACE PREP.: SSPC-SP10 OPEN HOLES: 15/16 Ø
PAINT: NONE

APPROVAL	DRAWN VHM 1-27-16	SHEET NO.	JOB NO.
SHOP	CHECKED FM 3-9-16	4AB	651

Sheet 04AB - Plotted: 03/14/2016 @ 09:43 (HEATHER)

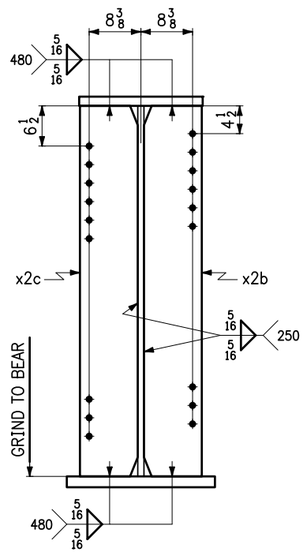

SECT. A

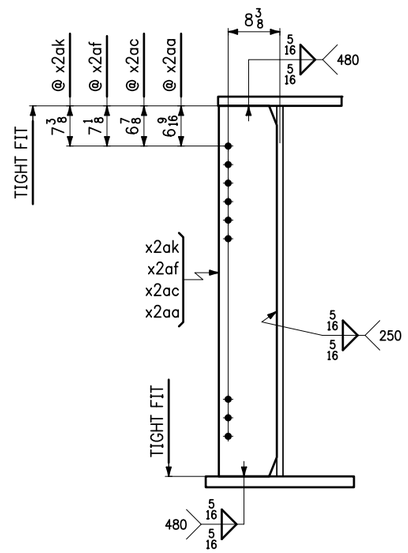

SECT. B

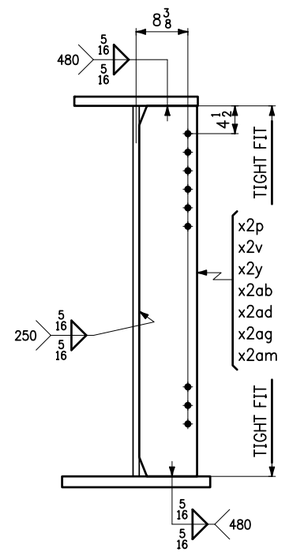

SECT. C

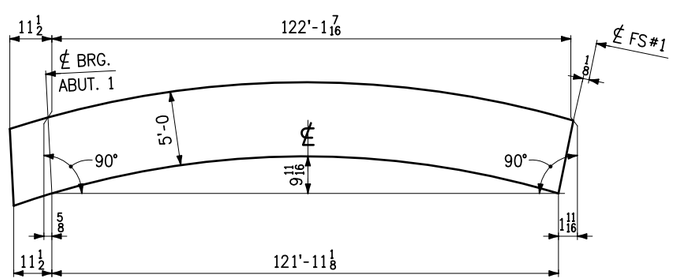

CAMBER DIAGRAM

LINE	NO. OF PCS.	SHIP MARK	ASS'Y MARK	MATERIAL SHAPE	SECTION	LENGTH FT.	LENGTH IN.	MATERIAL SPEC.	ITEM NO.	REMARKS
1	1	4G4A			GIRDER					48,635 lbs.
2	1		wa	PL	3/4 x 60	43	11 15/16	M270-50WT2	1/12	6737 lbs.
3	1		wb	PL	3/4 x 60	79	1 1/2	M270-50WT2	1/11	12,116 lbs.
4	1		ta	PL	1 1/4 x 20	46	1 1/16	M270-50W	1/23	3921 lbs.
5	1		tb	PL	1 1/2 x 20	76	11 7/8	M270-50W	1/21	7859 lbs.
6	1		ba	PL	1 1/2 x 24	45	10 3/4	M270-50WT2	1/19	5622 lbs.
7	1		bb	PL	1 3/4 x 24	76	11 7/8	M270-50WT2	1/17	11,003 lbs.
8										
9	1		x2b	PL	1 x 9 1/2	5	0	M270-50W	4/2	G1E 162 lbs.
10	1		x2c	PL	1 x 9 1/2	5	0	M270-50W	4/2	G1E 162 lbs.
11	1		x2p	PL	1/2 x 9 1/2	5	0	M270-50W	4/3	81 lbs.
12	1		x2v	PL	1/2 x 9 1/2	5	0	M270-50W	4/3	81 lbs.
13	1		x2y	PL	1/2 x 9 1/2	5	0	M270-50W	4/3	81 lbs.
14	1		x2aa	PL	1/2 x 9 1/2	5	0	M270-50W	4/3	81 lbs.
15	1		x2ab	PL	1/2 x 9 1/2	5	0	M270-50W	4/3	81 lbs.
16	1		x2ac	PL	1/2 x 9 1/2	5	0	M270-50W	4/3	81 lbs.
17	1		x2ad	PL	1/2 x 9 1/2	5	0	M270-50W	4/3	81 lbs.
18	1		x2af	PL	1/2 x 9 1/2	5	0	M270-50W	4/3	81 lbs.
19	1		x2ag	PL	1/2 x 9 1/2	5	0	M270-50W	4/3	81 lbs.
20	3		x2ak	PL	1/2 x 9 1/2	5	0	M270-50W	4/3	243 lbs.
21	1		x2am	PL	1/2 x 9 1/2	5	0	M270-50W	4/3	81 lbs.
22										
23										
24										
25										

NO.	DATE	REMARKS	BY

REVISIONS

CASCO BAY STEEL STRUCTURES
ONE WALLACE AVENUE
SOUTH PORTLAND, ME 04106
PHONE: 207-780-6722
FAX: 207-780-6726

STRUCTURE: VT 100 OVER MAD RIVER
LOCATION: TOWN OF WAITSFIELD, VERMONT
PROJECT NO.: PROJECT NO. BRF 013-4(39) BRIDGE NO. 177
ENGINEER: MCFARLAND JOHNSON
CUSTOMER: A.L. ST. ONGE CONTRACTOR, INC.
ITEM: GIRDER ~ 4G4A
SURFACE PREP.: SSPC-SP10 OPEN HOLES: 15/16ø
PAINT: NONE

APPROVAL	DRAWN VMM 1-27-16	SHEET NO.	JOB NO.
SHOP	CHECKED FM 3-9-16	4B	651

1500-9 G4A-1500B

Sheet 04B - Plotted: 03/14/2016 @ 09:43 (HEATHER)

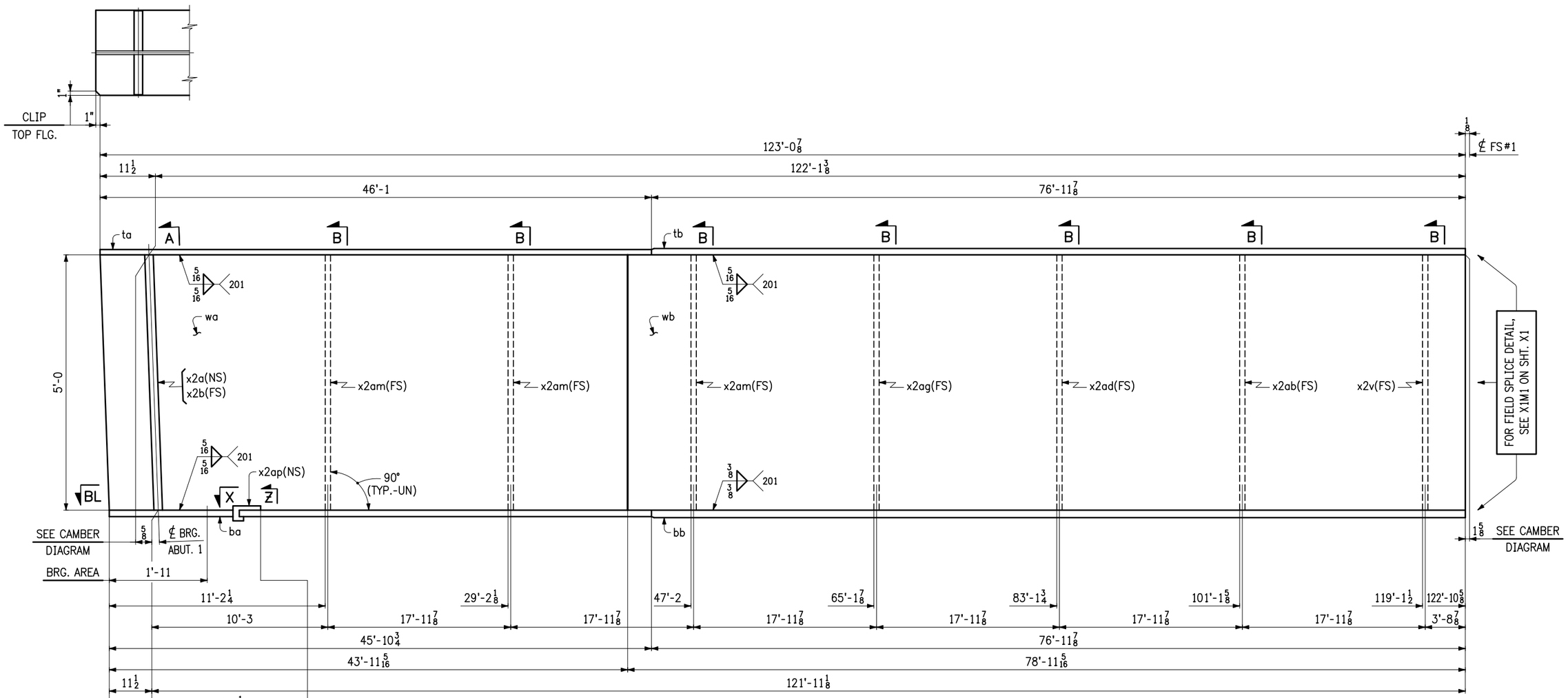

ONE ~ GIRDER ~ 5G5A

- FOR GIRDER STANDARD DETAILS, SEE SHT. X2.
- FOR WEB CUTTING DIAGRAM, SEE SHT. C1.
- FOR FLANGE CUTTING DIAGRAMS, SEE SHT. C1.
- FOR GENERAL NOTES, SEE SHT. GN1.
- "BRG. AREA" INDICATES AREA THAT MUST BE FLAT TO PROVIDE A UNIFORM EVEN CONTACT WITH SOLE PLATE.

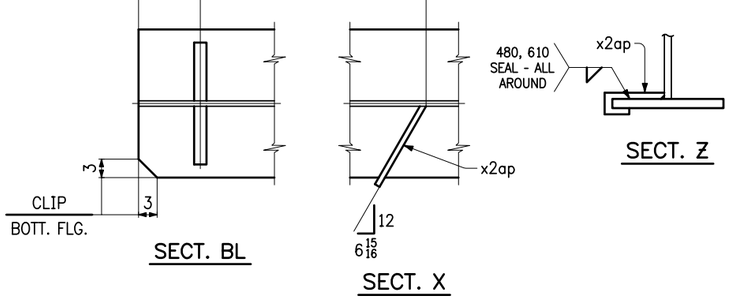

NO.	DATE	REMARKS	BY

REVISIONS

CASCO BAY STEEL STRUCTURES

CASCO BAY STEEL STRUCTURES
ONE WALLACE AVENUE
SOUTH PORTLAND, ME 04106
PHONE: 207-780-6722
FAX: 207-780-6726

STRUCTURE: VT 100 OVER MAD RIVER
LOCATION: TOWN OF WAITSFIELD, VERMONT
PROJECT NO.: PROJECT NO. BRF 013-4(39) BRIDGE NO. 177
ENGINEER: MCFARLAND JOHNSON
CUSTOMER: A.L. ST. ONGE CONTRACTOR, INC.
ITEM: GIRDER ~ 5G5A
SURFACE PREP.: SSPC-SP10 OPEN HOLES: 15/16 Ø
PAINT: NONE

APPROVAL	DRAWN VHM 1-27-16	SHEET NO.	JOB NO.
SHOP	CHECKED FM 3-9-16	5AB	651

Sheet 05AB - Plotted: 03/14/2016 @ 09:44 (HEATHER)

LINE	NO. OF PCS.	SHIP MARK	ASS'Y MARK	MATERIAL						
				SHAPE	SECTION	LENGTH FT.	LENGTH IN.	MATERIAL SPEC.	ITEM NO.	REMARKS
1	1	5G5A			GIRDER					48,149 lbs.
2	1		wa	PL	$\frac{3}{4}$ x 60	43	$11\frac{13}{16}$	M270-50WT2	1/12	6735 lbs.
3	1		wb	PL	$\frac{3}{4}$ x 60	79	$1\frac{7}{16}$	M270-50WT2	1/11	12,115 lbs.
4	1		ta	PL	$1\frac{1}{4}$ x 20	46	1	M270-50W	1/23	3920 lbs.
5	1		tb	PL	$1\frac{1}{2}$ x 20	76	$11\frac{7}{8}$	M270-50W	1/21	7859 lbs.
6	1		ba	PL	$1\frac{1}{2}$ x 24	45	$10\frac{3}{4}$	M270-50WT2	1/19	5622 lbs.
7	1		bb	PL	$1\frac{3}{4}$ x 24	76	$11\frac{7}{8}$	M270-50WT2	1/17	11,003 lbs.
8										
9	1		x2a	PL	1 x $9\frac{1}{2}$	5	0	M270-50W	4/2	G1E 162 lbs.
10	1		x2b	PL	1 x $9\frac{1}{2}$	5	0	M270-50W	4/2	G1E 162 lbs.
11	1		x2v	PL	$\frac{1}{2}$ x $9\frac{1}{2}$	5	0	M270-50W	4/3	81 lbs.
12	1		x2ab	PL	$\frac{1}{2}$ x $9\frac{1}{2}$	5	0	M270-50W	4/3	81 lbs.
13	1		x2ad	PL	$\frac{1}{2}$ x $9\frac{1}{2}$	5	0	M270-50W	4/3	81 lbs.
14	1		x2ag	PL	$\frac{1}{2}$ x $9\frac{1}{2}$	5	0	M270-50W	4/3	81 lbs.
15	3		x2am	PL	$\frac{1}{2}$ x $9\frac{1}{2}$	5	0	M270-50W	4/3	243 lbs.
16	1		x2ap	PL	$\frac{1}{4}$ x $3\frac{1}{2}$	1	$3\frac{7}{16}$	M270-50W	4/4	4 lbs.
17										
18										
19										
20										
21										
22										
23										
24										
25										

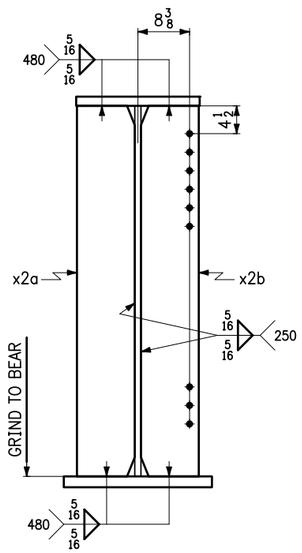

SECT. A

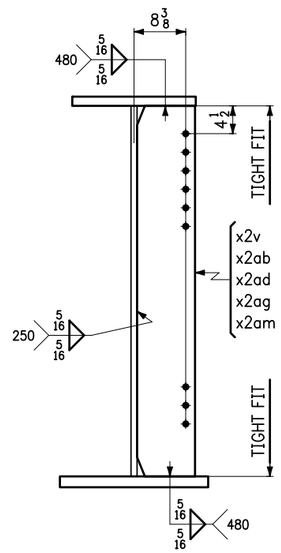

SECT. B

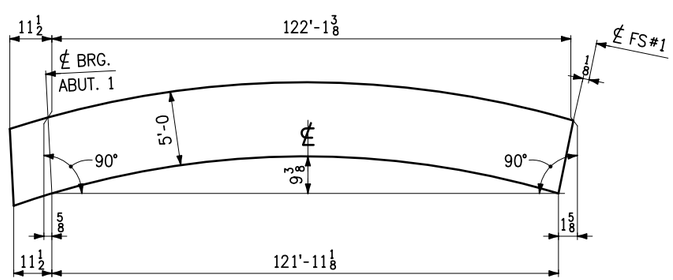

CAMBER DIAGRAM

NO.	DATE	REMARKS	BY

REVISIONS

CASCO BAY STEEL STRUCTURES

ONE WALLACE AVENUE
SOUTH PORTLAND, ME 04106
PHONE: 207-780-6722
FAX: 207-780-6726

STRUCTURE: VT 100 OVER MAD RIVER
LOCATION: TOWN OF WAITSFIELD, VERMONT
PROJECT NO.: PROJECT NO. BRF 013-4(39) BRIDGE NO. 177
ENGINEER: MCFARLAND JOHNSON
CUSTOMER: A.L. ST. ONGE CONTRACTOR, INC.
ITEM: GIRDER ~ 5G5A
SURFACE PREP.: SSPC-SP10 OPEN HOLES: $\frac{15}{16}$ø
PAINT: NONE

APPROVAL	DRAWN VMM 1-27-16	SHEET NO.	JOB NO.
SHOP	CHECKED FM 3-9-16	5B	651

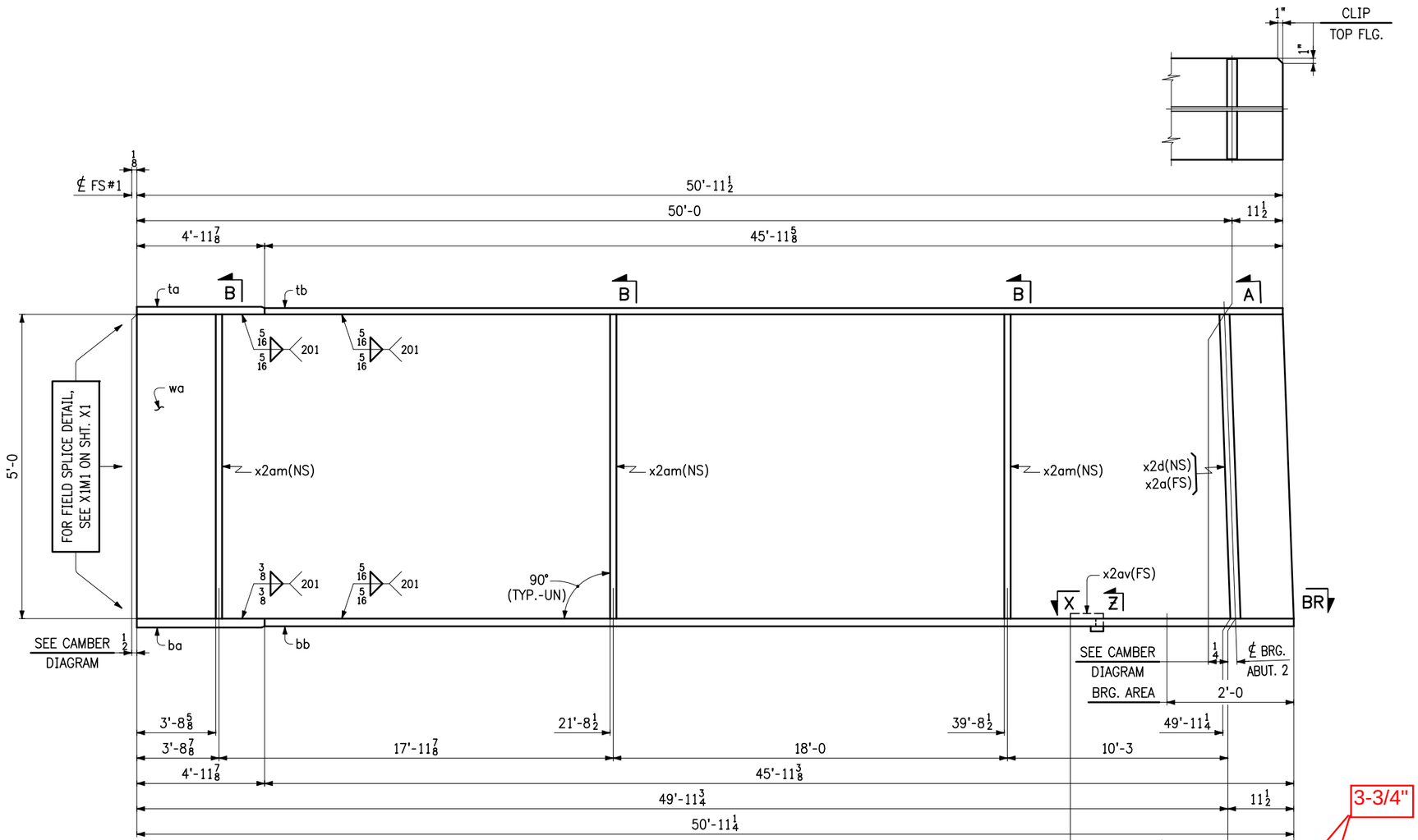

ONE ~ GIRDER ~ 6G1B

- FOR GIRDER STANDARD DETAILS, SEE SHT. X2.
- FOR WEB CUTTING DIAGRAM, SEE SHT. C3.
- FOR FLANGE CUTTING DIAGRAMS, SEE SHT. C3.
- FOR GENERAL NOTES, SEE SHT. GN1.
- "BRG. AREA" INDICATES AREA THAT MUST BE FLAT TO PROVIDE A UNIFORM EVEN CONTACT WITH SOLE PLATE.

NO.	DATE	REMARKS	BY

REVISIONS

CASCO BAY STEEL STRUCTURES

CASCO BAY STEEL STRUCTURES
ONE WALLACE AVENUE
SOUTH PORTLAND, ME 04106
PHONE: 207-780-6722
FAX: 207-780-6726

STRUCTURE: VT 100 OVER MAD RIVER
LOCATION: TOWN OF WAITSFIELD, VERMONT
PROJECT NO.: PROJECT NO. BRF 013-4(39) BRIDGE NO. 177
ENGINEER: MCFARLAND JOHNSON
CUSTOMER: A.L. ST. ONGE CONTRACTOR, INC.
ITEM: GIRDER ~ 6G1B
SURFACE PREP.: SSPC-SP10 OPEN HOLES: 15/16 Ø
PAINT: NONE

APPROVAL	DRAWN VHM 1-28-16	SHEET NO.	JOB NO.
SHOP	CHECKED FM 3-9-16	6AB	651

Sheet 06AB - Plotted: 03/14/2016 @ 09:44 (HEATHER)

LINE	NO. OF PCS.	SHIP MARK	ASS'Y MARK	MATERIAL							
				SHAPE	SECTION	LENGTH FT.	LENGTH IN.	MATERIAL SPEC.	ITEM NO.	REMARKS
1	1	6G1B			GIRDER				1	18,201 lbs.
2	1		wa	PL	$\frac{3}{4}$ x 60	50	$11\frac{3}{4}$	M270-50WT2	1/14	7806 lbs.
3	1		ta	PL	$1\frac{1}{2}$ x 20	4	$11\frac{7}{8}$	M270-50W	2/1	509 lbs.
4	1		tb	PL	$1\frac{1}{4}$ x 20	45	$11\frac{5}{8}$	M270-50W	2/3	3911 lbs.
5	1		ba	PL	$1\frac{3}{4}$ x 24	4	$11\frac{7}{8}$	M270-50WT2	1/25	713 lbs.
6	1		bb	PL	$1\frac{1}{4}$ x 24	45	$11\frac{3}{8}$	M270-50WT2	1/27	4691 lbs.
7										
8	1		x2a	PL	1 x $9\frac{1}{2}$	5	0	M270-50W	4/2	G1E 162 lbs.
9	1		x2d	PL	1 x $9\frac{1}{2}$	5	0	M270-50W	4/2	G1E 162 lbs.
10	3		x2am	PL	$\frac{1}{2}$ x $9\frac{1}{2}$	5	0	M270-50W	4/3	243 lbs.
11	1		x2av	PL	$\frac{1}{4}$ x $3\frac{1}{2}$	1	$3\frac{7}{16}$	M270-50W	4/4	4 lbs.
12										
13										
14										
15										
16										
17										
18										
19										
20										
21										
22										
23										
24										
25										

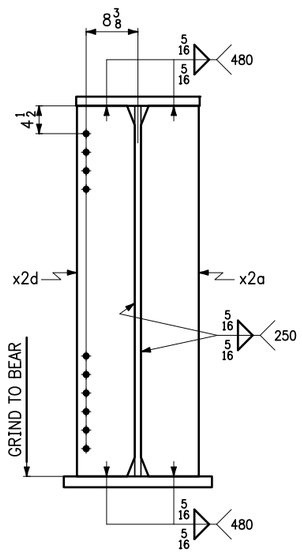

SECT. A

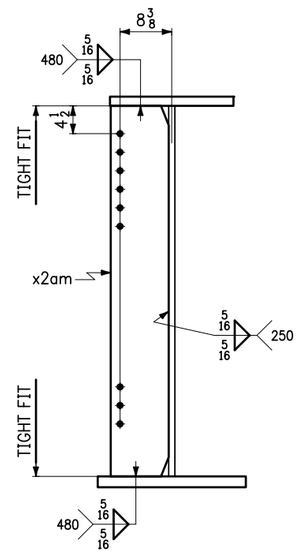

SECT. B

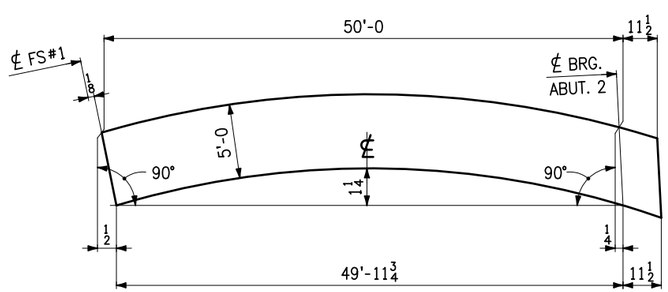

CAMBER DIAGRAM

NO.	DATE	REMARKS	BY

REVISIONS

CASCO BAY STEEL STRUCTURES

ONE WALLACE AVENUE
SOUTH PORTLAND, ME 04106
PHONE: 207-780-6722
FAX: 207-780-6726

STRUCTURE: VT 100 OVER MAD RIVER
LOCATION: TOWN OF WAITSFIELD, VERMONT
PROJECT NO.: PROJECT NO. BRF 013-4(39) BRIDGE NO. 177
ENGINEER: MCFARLAND JOHNSON
CUSTOMER: A.L. ST. ONGE CONTRACTOR, INC.
ITEM: GIRDER ~ 6G1B
SURFACE PREP.: SSPC-SP10 OPEN HOLES: $\frac{15}{16}$ø
PAINT: NONE

APPROVAL	DRAWN VMM 1-28-16	SHEET NO.	JOB NO.
SHOP	CHECKED FM 3-9-16	6B	651

Sheet 06B - Plotted: 03/14/2016 @ 09:44 (HEATHER)

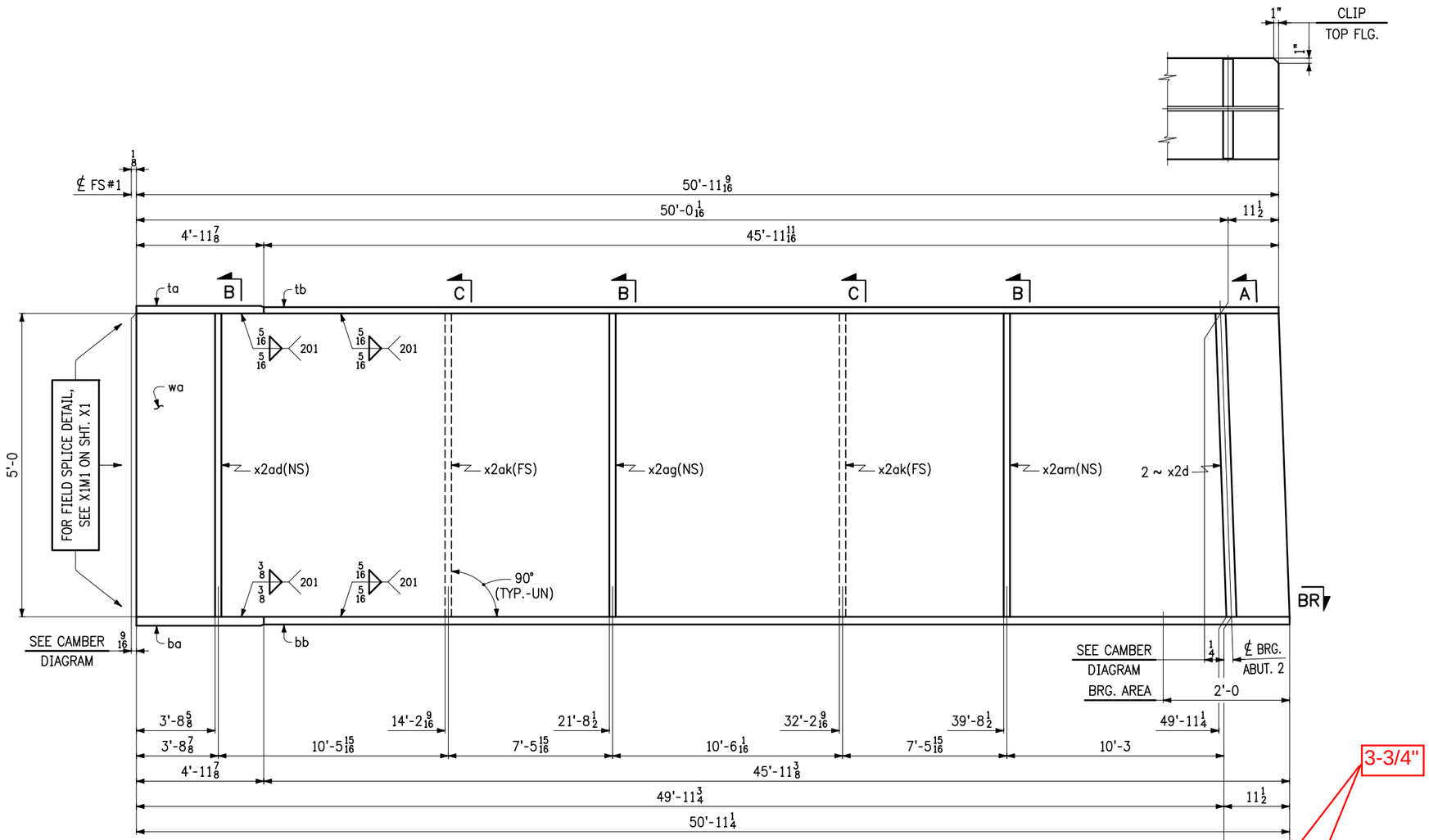

ONE ~ GIRDER ~ 7G2B

- FOR GIRDER STANDARD DETAILS, SEE SHT. X2.
- FOR WEB CUTTING DIAGRAM, SEE SHT. C3.
- FOR FLANGE CUTTING DIAGRAMS, SEE SHT. C3.
- FOR GENERAL NOTES, SEE SHT. GN1.
- "BRG. AREA" INDICATES AREA THAT MUST BE FLAT TO PROVIDE A UNIFORM EVEN CONTACT WITH SOLE PLATE.

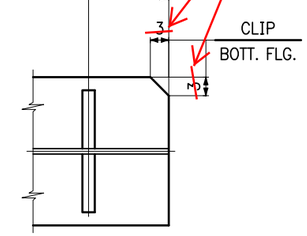

SECT. BR

NO.	DATE	REMARKS	BY

REVISIONS

CASCO BAY STEEL STRUCTURES
ONE WALLACE AVENUE
SOUTH PORTLAND, ME 04106
PHONE: 207-780-6722
FAX: 207-780-6726

STRUCTURE: VT 100 OVER MAD RIVER
LOCATION: TOWN OF WAITSFIELD, VERMONT
PROJECT NO.: PROJECT NO. BRF 013-4(39) BRIDGE NO. 177
ENGINEER: MCFARLAND JOHNSON
CUSTOMER: A.L. ST. ONGE CONTRACTOR, INC.
ITEM: GIRDER ~ 7G2B
SURFACE PREP.: SSPC-SP10 OPEN HOLES: 15/16Ø
PAINT: NONE

APPROVAL	DRAWN VHM 1-28-16	SHEET NO.	JOB NO.
SHOP	CHECKED FM 3-9-16	7AB	651

Sheet 07AB - Plotted: 03/14/2016 @ 09:44 (HEATHER)

LINE	NO. OF PCS.	SHIP MARK	ASS'Y MARK	MATERIAL SHAPE	SECTION	LENGTH FT.	LENGTH IN.	MATERIAL SPEC.	ITEM NO.	REMARKS
1	1	7G2B			GIRDER				/	18,360 lbs.
2	1		wa	PL	$\frac{3}{4}$ x 60	50	$11\frac{13}{16}$	M270-50WT2	1/14	7807 lbs.
3	1		ta	PL	$1\frac{1}{2}$ x 20	4	$11\frac{7}{8}$	M270-50W	2/1	509 lbs.
4	1		tb	PL	$1\frac{1}{4}$ x 20	45	$11\frac{11}{16}$	M270-50W	2/3	3911 lbs.
5	1		ba	PL	$1\frac{3}{4}$ x 24	4	$11\frac{7}{8}$	M270-50WT2	1/25	713 lbs.
6	1		bb	PL	$1\frac{1}{4}$ x 24	45	$11\frac{3}{8}$	M270-50WT2	1/27	4691 lbs.
7									/	
8	2		x2d	PL	1 x $9\frac{1}{2}$	5	0	M270-50W	4/2	G1E 324 lbs.
9	1		x2ad	PL	$\frac{1}{2}$ x $9\frac{1}{2}$	5	0	M270-50W	4/3	81 lbs.
10	1		x2ag	PL	$\frac{1}{2}$ x $9\frac{1}{2}$	5	0	M270-50W	4/3	81 lbs.
11	2		x2ak	PL	$\frac{1}{2}$ x $9\frac{1}{2}$	5	0	M270-50W	4/3	162 lbs.
12	1		x2am	PL	$\frac{1}{2}$ x $9\frac{1}{2}$	5	0	M270-50W	4/3	81 lbs.
13									/	
14									/	
15									/	
16									/	
17									/	
18									/	
19									/	
20									/	
21									/	
22									/	
23									/	
24									/	
25									/	

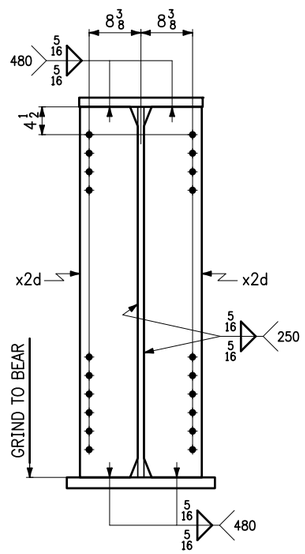

SECT. A

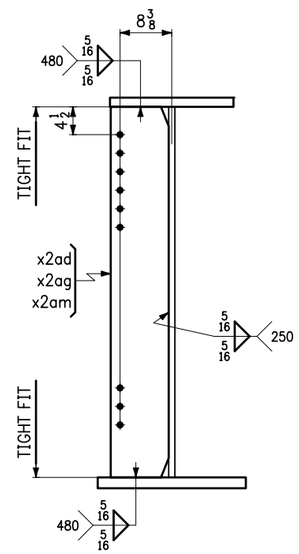

SECT. B

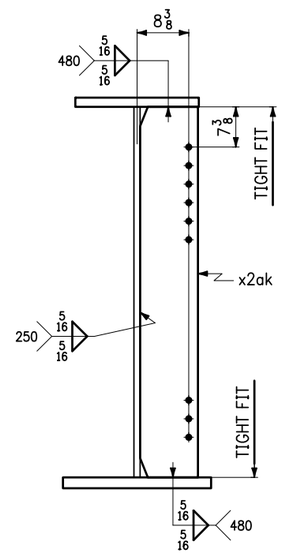

SECT. C

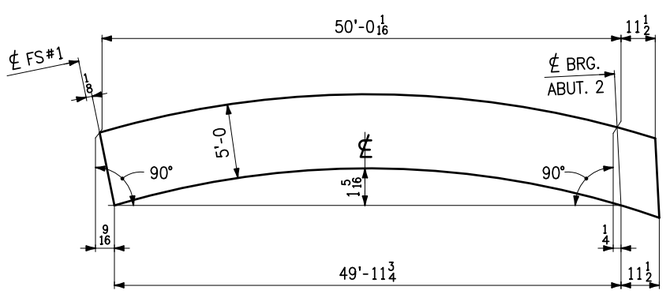

CAMBER DIAGRAM

NO.	DATE	REMARKS	BY

REVISIONS

CASCO BAY STEEL STRUCTURES
ONE WALLACE AVENUE
SOUTH PORTLAND, ME 04106
PHONE: 207-780-6722
FAX: 207-780-6726

STRUCTURE: VT 100 OVER MAD RIVER
LOCATION: TOWN OF WAITSFIELD, VERMONT
PROJECT NO.: PROJECT NO. BRF 013-4(39) BRIDGE NO. 177
ENGINEER: MCFARLAND JOHNSON
CUSTOMER: A.L. ST. ONGE CONTRACTOR, INC.
ITEM: GIRDER ~ 7G2B
SURFACE PREP.: SSPC-SP10 OPEN HOLES: $\frac{15}{16}$ø
PAINT: NONE

APPROVAL	DRAWN VMM 1-28-16	SHEET NO.	JOB NO.
SHOP	CHECKED FM 3-9-16	7B	651

1500-9 G2B-1500B

Sheet 07B - Plotted: 03/14/2016 @ 09:44 (HEATHER)

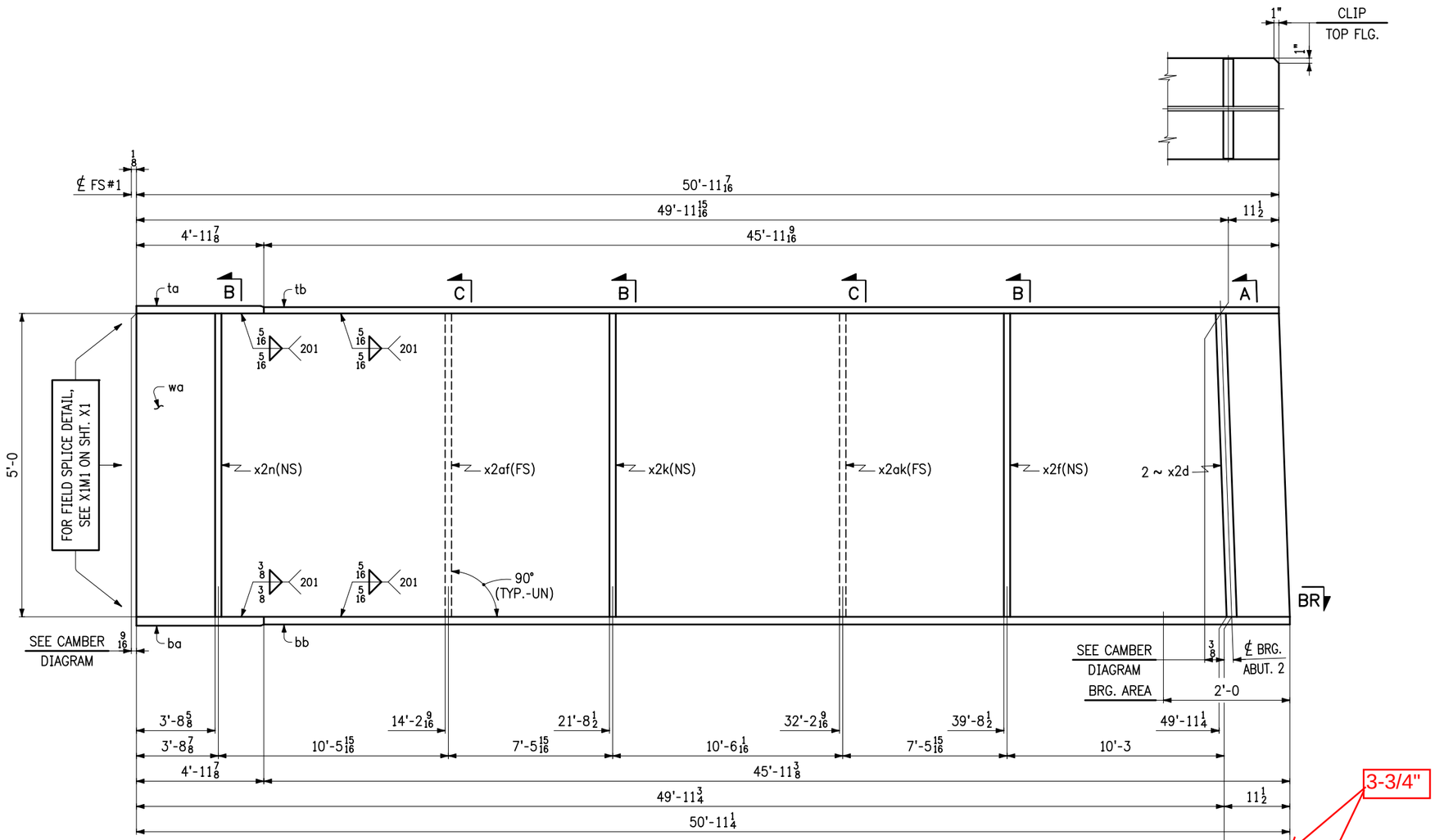

ONE ~ GIRDER ~ 8G3B

- FOR GIRDER STANDARD DETAILS, SEE SHT. X2.
- FOR WEB CUTTING DIAGRAM, SEE SHT. C3.
- FOR FLANGE CUTTING DIAGRAMS, SEE SHT. C3.
- FOR GENERAL NOTES, SEE SHT. GN1.
- "BRG. AREA" INDICATES AREA THAT MUST BE FLAT TO PROVIDE A UNIFORM EVEN CONTACT WITH SOLE PLATE.

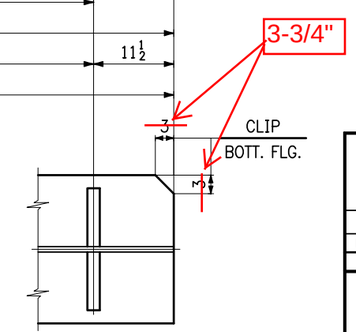

SECT. BR

NO.	DATE	REMARKS	BY

REVISIONS

CASCO BAY STEEL STRUCTURES

CASCO BAY STEEL STRUCTURES
ONE WALLACE AVENUE
SOUTH PORTLAND, ME 04106
PHONE: 207-780-6722
FAX: 207-780-6726

STRUCTURE: VT 100 OVER MAD RIVER
LOCATION: TOWN OF WAITSFIELD, VERMONT
PROJECT NO.: PROJECT NO. BRF 013-4(39) BRIDGE NO. 177
ENGINEER: MCFARLAND JOHNSON
CUSTOMER: A.L. ST. ONGE CONTRACTOR, INC.
ITEM: GIRDER ~ 8G3B
SURFACE PREP.: SSPC-SP10 OPEN HOLES: 15/16Ø
PAINT: NONE

APPROVAL	DRAWN VHM 1-28-16	SHEET NO.	JOB NO.
SHOP	CHECKED FM 3-9-16	8AB	651

Sheet 08AB - Plotted: 03/14/2016 @ 09:44 (HEATHER)

LINE	NO. OF PCS.	SHIP MARK	ASS'Y MARK	MATERIAL							
				SHAPE	SECTION	LENGTH FT.	LENGTH IN.	MATERIAL SPEC.	ITEM NO.	REMARKS
1	1	8G3B			GIRDER					18,359 lbs.
2	1		wa	PL	$\frac{3}{4}$ x 60	50	$11\frac{13}{16}$	M270-50WT2	1/14	7807 lbs.
3	1		ta	PL	$1\frac{1}{2}$ x 20	4	$11\frac{7}{8}$	M270-50W	2/1	509 lbs.
4	1		tb	PL	$1\frac{1}{4}$ x 20	45	$11\frac{9}{16}$	M270-50W	2/3	3910 lbs.
5	1		ba	PL	$1\frac{3}{4}$ x 24	4	$11\frac{7}{8}$	M270-50WT2	1/25	713 lbs.
6	1		bb	PL	$1\frac{1}{4}$ x 24	45	$11\frac{3}{8}$	M270-50WT2	1/27	4691 lbs.
7										
8	2		x2d	PL	1 x $9\frac{1}{2}$	5	0	M270-50W	4/2	G1E 324 lbs.
9	1		x2f	PL	$\frac{1}{2}$ x $9\frac{1}{2}$	5	0	M270-50W	4/3	81 lbs.
10	1		x2k	PL	$\frac{1}{2}$ x $9\frac{1}{2}$	5	0	M270-50W	4/3	81 lbs.
11	1		x2n	PL	$\frac{1}{2}$ x $9\frac{1}{2}$	5	0	M270-50W	4/3	81 lbs.
12	1		x2af	PL	$\frac{1}{2}$ x $9\frac{1}{2}$	5	0	M270-50W	4/3	81 lbs.
13	1		x2ak	PL	$\frac{1}{2}$ x $9\frac{1}{2}$	5	0	M270-50W	4/3	81 lbs.
14										
15										
16										
17										
18										
19										
20										
21										
22										
23										
24										
25										

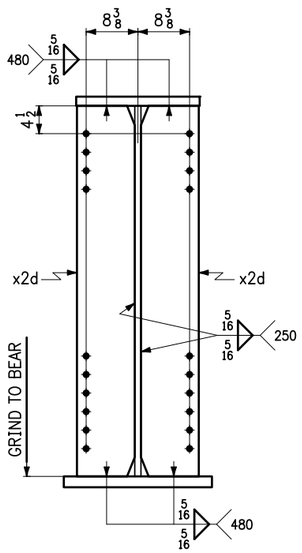

SECT. A

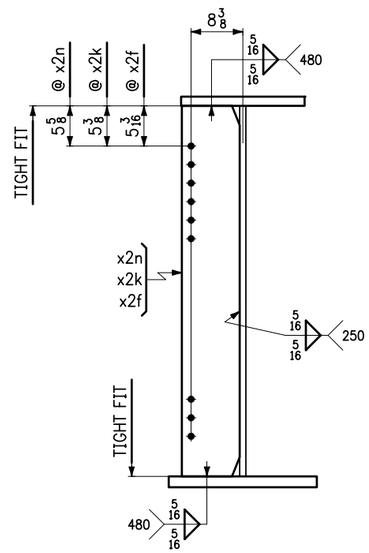

SECT. B

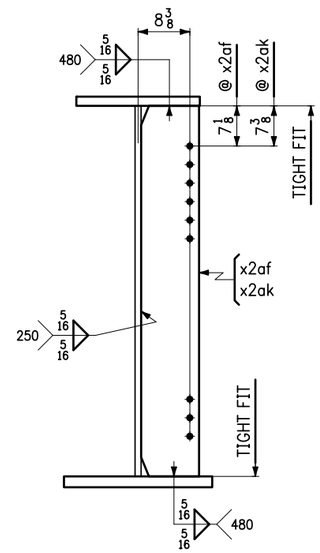

SECT. C

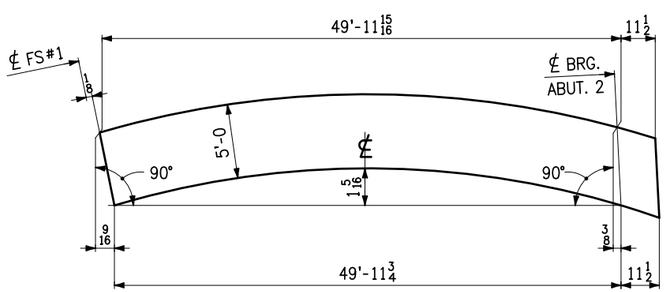

CAMBER DIAGRAM

NO.	DATE	REMARKS	BY

REVISIONS

CASCO BAY STEEL STRUCTURES

ONE WALLACE AVENUE
SOUTH PORTLAND, ME 04106
PHONE: 207-780-6722
FAX: 207-780-6726

STRUCTURE: VT 100 OVER MAD RIVER
LOCATION: TOWN OF WAITSFIELD, VERMONT
PROJECT NO.: PROJECT NO. BRF 013-4(39) BRIDGE NO. 177
ENGINEER: MCFARLAND JOHNSON
CUSTOMER: A.L. ST. ONGE CONTRACTOR, INC.
ITEM: GIRDER ~ 8G3B
SURFACE PREP.: SSPC-SP10 OPEN HOLES: $\frac{15}{16}$ø
PAINT: NONE

APPROVAL	DRAWN VMM 1-28-16	SHEET NO.	JOB NO.
SHOP	CHECKED FM 3-9-16	8B	651

Sheet 08B - Plotted: 03/14/2016 @ 09:45 (HEATHER)

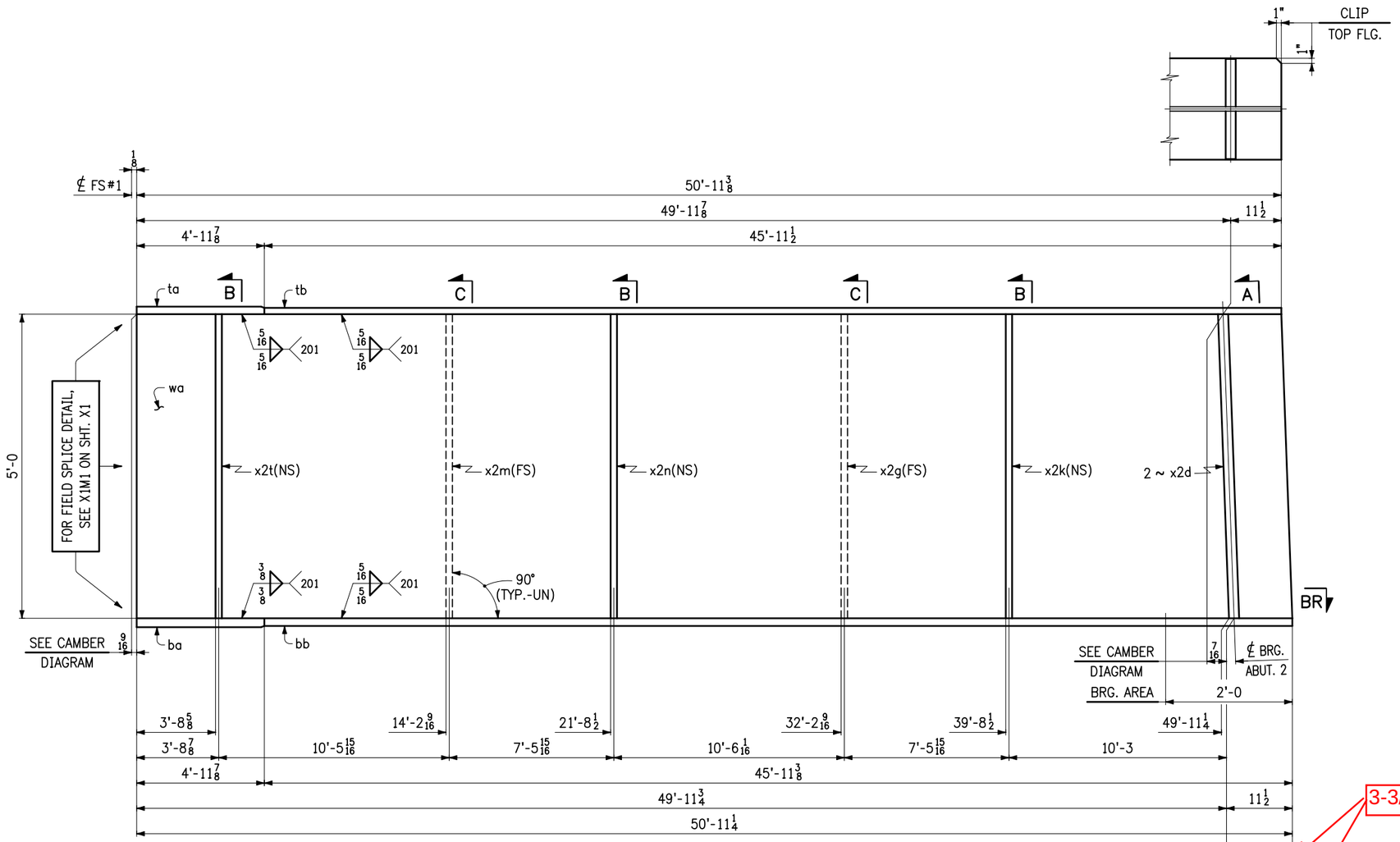

ONE ~ GIRDER ~ 9G4B

- FOR GIRDER STANDARD DETAILS, SEE SHT. X2.
- FOR WEB CUTTING DIAGRAM, SEE SHT. C3.
- FOR FLANGE CUTTING DIAGRAMS, SEE SHT. C3.
- FOR GENERAL NOTES, SEE SHT. GN1.
- "BRG. AREA" INDICATES AREA THAT MUST BE FLAT TO PROVIDE A UNIFORM EVEN CONTACT WITH SOLE PLATE.

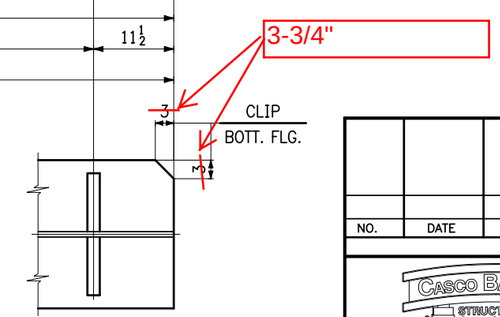

SECT. BR

NO.	DATE	REMARKS	BY

REVISIONS

CASCO BAY STEEL STRUCTURES

CASCO BAY STEEL STRUCTURES
ONE WALLACE AVENUE
SOUTH PORTLAND, ME 04106
PHONE: 207-780-6722
FAX: 207-780-6726

STRUCTURE: VT 100 OVER MAD RIVER
LOCATION: TOWN OF WAITSFIELD, VERMONT
PROJECT NO.: PROJECT NO. BRF 013-4(39) BRIDGE NO. 177
ENGINEER: MCFARLAND JOHNSON
CUSTOMER: A.L. ST. ONGE CONTRACTOR, INC.
ITEM: GIRDER ~ 9G4B
SURFACE PREP.: SSPC-SP10 OPEN HOLES: 15/16ø
PAINT: NONE

APPROVAL	DRAWN VHM 1-28-16	SHEET NO.	JOB NO.
SHOP	CHECKED FM 3-9-16	9AB	651

Sheet 09AB - Plotted: 03/14/2016 @ 09:45 (HEATHER)

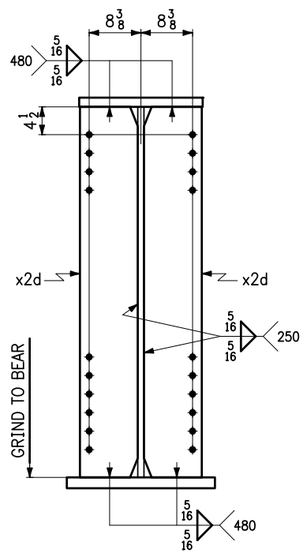

SECT. A

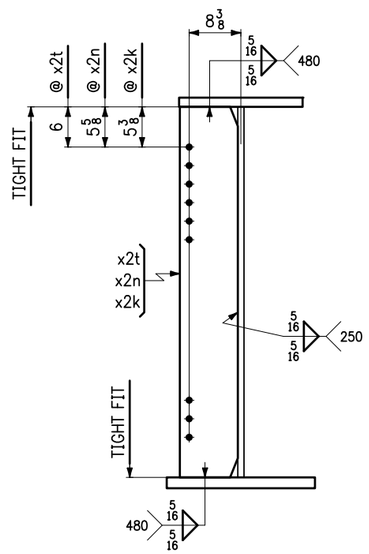

SECT. B

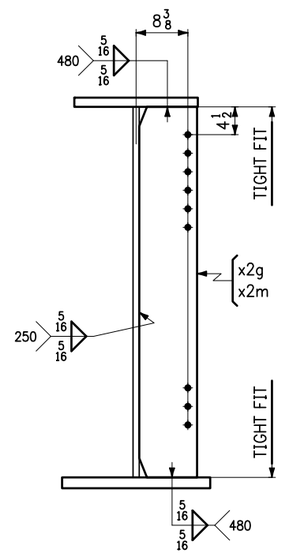

SECT. C

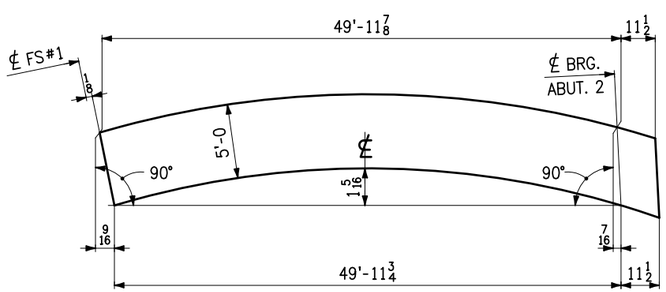

CAMBER DIAGRAM

LINE	NO. OF PCS.	SHIP MARK	ASS'Y MARK	MATERIAL SHAPE	SECTION	LENGTH FT.	LENGTH IN.	MATERIAL SPEC.	ITEM NO.	REMARKS
1	1	9G4B			GIRDER					18,359 lbs.
2	1		wa	PL	3/4 x 60	50	11 13/16	M270-50WT2	1/14	7807 lbs.
3	1		ta	PL	1 1/2 x 20	4	11 7/8	M270-50W	2/1	509 lbs.
4	1		tb	PL	1 1/4 x 20	45	11 1/2	M270-50W	2/3	3910 lbs.
5	1		ba	PL	1 3/4 x 24	4	11 7/8	M270-50WT2	1/25	713 lbs.
6	1		bb	PL	1 1/4 x 24	45	11 3/8	M270-50WT2	1/27	4691 lbs.
7										
8	2		x2d	PL	1 x 9 1/2	5	0	M270-50W	4/2	G1E 324 lbs.
9	1		x2g	PL	1/2 x 9 1/2	5	0	M270-50W	4/3	81 lbs.
10	1		x2k	PL	1/2 x 9 1/2	5	0	M270-50W	4/3	81 lbs.
11	1		x2m	PL	1/2 x 9 1/2	5	0	M270-50W	4/3	81 lbs.
12	1		x2n	PL	1/2 x 9 1/2	5	0	M270-50W	4/3	81 lbs.
13	1		x2t	PL	1/2 x 9 1/2	5	0	M270-50W	4/3	81 lbs.
14										
15										
16										
17										
18										
19										
20										
21										
22										
23										
24										
25										

NO.	DATE	REMARKS	BY

REVISIONS

CASCO BAY STEEL STRUCTURES
ONE WALLACE AVENUE
SOUTH PORTLAND, ME 04106
PHONE: 207-780-6722
FAX: 207-780-6726

STRUCTURE: VT 100 OVER MAD RIVER
LOCATION: TOWN OF WAITSFIELD, VERMONT
PROJECT NO.: PROJECT NO. BRF 013-4(39) BRIDGE NO. 177
ENGINEER: MCFARLAND JOHNSON
CUSTOMER: A.L. ST. ONGE CONTRACTOR, INC.
ITEM: GIRDER ~ 9G4B
SURFACE PREP.: SSPC-SP10 OPEN HOLES: 15/16ø
PAINT: NONE

APPROVAL	DRAWN VMM 1-28-16	SHEET NO.	JOB NO.
SHOP	CHECKED FM 3-9-16	9B	651

Sheet 09B - Plotted: 03/14/2016 @ 09:45 (HEATHER)

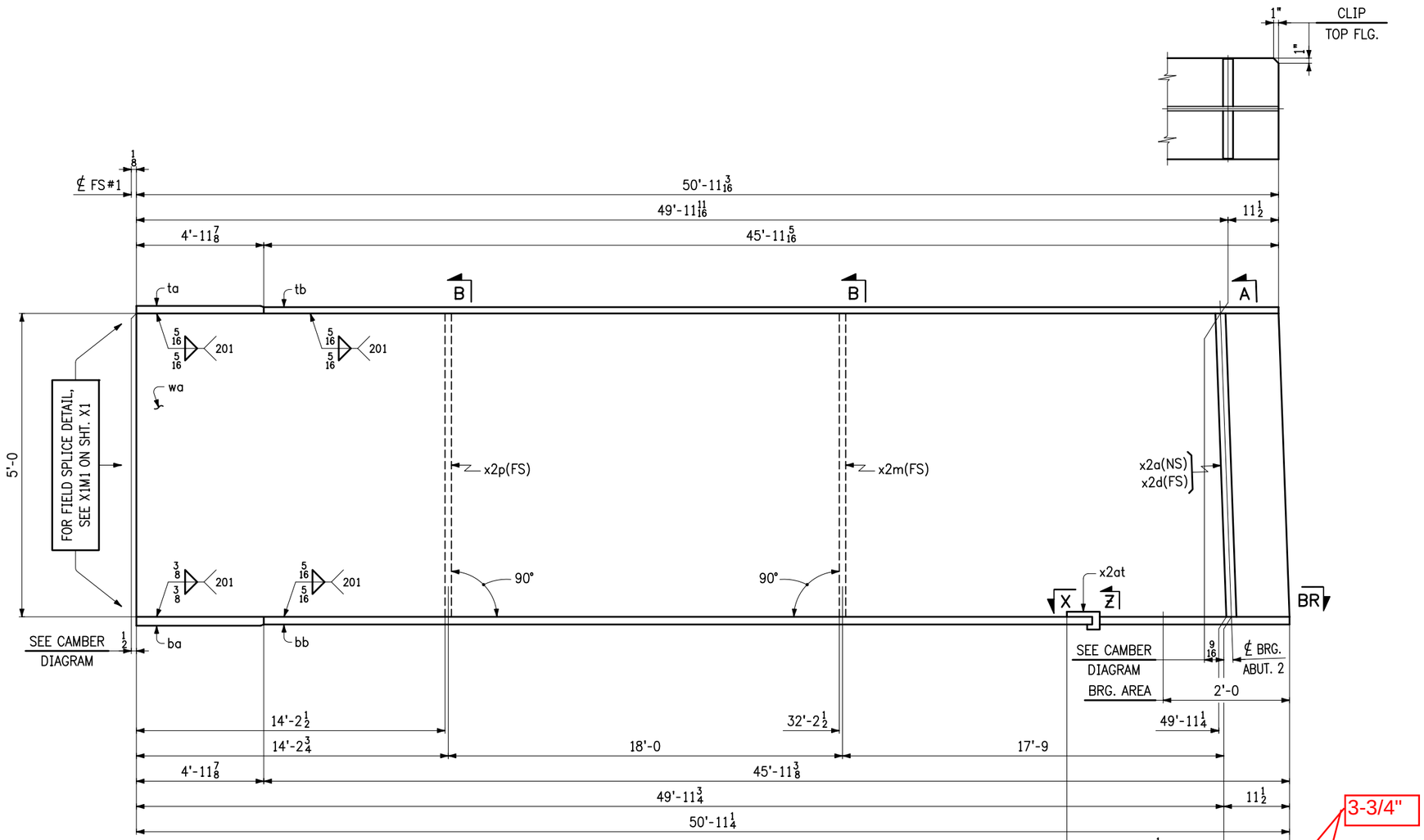

ONE ~ GIRDER ~ 10G5B

- FOR GIRDER STANDARD DETAILS, SEE SHT. X2.
- FOR WEB CUTTING DIAGRAM, SEE SHT. C3.
- FOR FLANGE CUTTING DIAGRAMS, SEE SHT. C3.
- FOR GENERAL NOTES, SEE SHT. GN1.
- "BRG. AREA" INDICATES AREA THAT MUST BE FLAT TO PROVIDE A UNIFORM EVEN CONTACT WITH SOLE PLATE.

NO.	DATE	REMARKS	BY

REVISIONS

CASCO BAY STEEL STRUCTURES

CASCO BAY STEEL STRUCTURES
ONE WALLACE AVENUE
SOUTH PORTLAND, ME 04106
PHONE: 207-780-6722
FAX: 207-780-6726

STRUCTURE: VT 100 OVER MAD RIVER
LOCATION: TOWN OF WAITSFIELD, VERMONT
PROJECT NO.: PROJECT NO. BRF 013-4(39) BRIDGE NO. 177
ENGINEER: MCFARLAND JOHNSON
CUSTOMER: A.L. ST. ONGE CONTRACTOR, INC.
ITEM: GIRDER ~ 10G5B
SURFACE PREP.: SSPC-SP10 OPEN HOLES: 15/16ø
PAINT: NONE

APPROVAL	DRAWN VHM 1-28-16	SHEET NO.	JOB NO.
SHOP	CHECKED FM 3-10-16	10AB	651

Sheet: 10AB - Plotted: 03/14/2016 @ 09:45 (HEATHER)

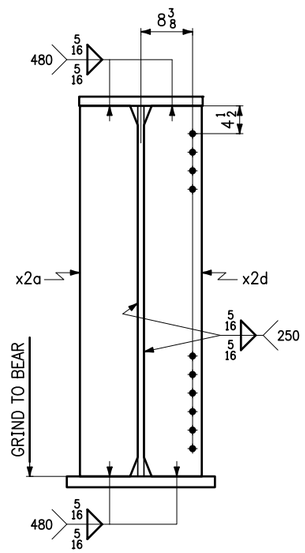

SECT. A

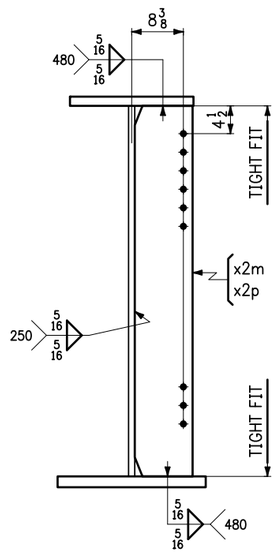

SECT. B

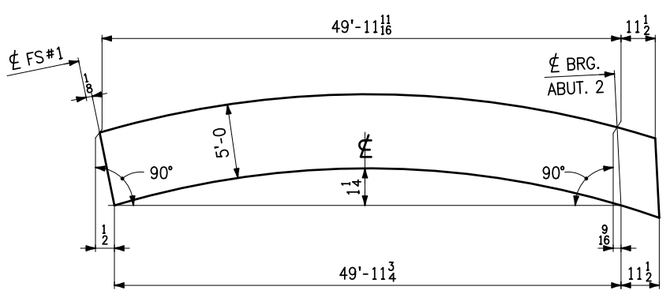

CAMBER DIAGRAM

LINE	NO. OF PCS.	SHIP MARK	ASS'Y MARK	MATERIAL SHAPE	SECTION	LENGTH FT.	LENGTH IN.	MATERIAL SPEC.	ITEM NO.	REMARKS
1	1	10G5B			GIRDER					18,117 lbs.
2	1		wa	PL	3/4 x 60	50	11 3/4	M270-50WT2	1/14	7806 lbs.
3	1		ta	PL	1 1/2 x 20	4	11 7/8	M270-50W	2/1	509 lbs.
4	1		tb	PL	1 1/4 x 20	45	11 5/16	M270-50W	2/4	3908 lbs.
5	1		ba	PL	1 3/4 x 24	4	11 7/8	M270-50WT2	1/25	713 lbs.
6	1		bb	PL	1 1/4 x 24	45	11 3/8	M270-50WT2	1/27	4691 lbs.
7										
8	1		x2a	PL	1 x 9 1/2	5	0	M270-50W	4/2	G1E 162 lbs.
9	1		x2d	PL	1 x 9 1/2	5	0	M270-50W	4/2	G1E 162 lbs.
10	1		x2m	PL	1/2 x 9 1/2	5	0	M270-50W	4/3	81 lbs.
11	1		x2p	PL	1/2 x 9 1/2	5	0	M270-50W	4/3	81 lbs.
12	1		x2at	PL	1/4 x 3 1/2	1	3 7/16	M270-50W	4/4	4 lbs.
13										
14										
15										
16										
17										
18										
19										
20										
21										
22										
23										
24										
25										

NO.	DATE	REMARKS	BY

REVISIONS

CASCO BAY STEEL STRUCTURES

ONE WALLACE AVENUE
SOUTH PORTLAND, ME 04106
PHONE: 207-780-6722
FAX: 207-780-6726

STRUCTURE: VT 100 OVER MAD RIVER
LOCATION: TOWN OF WAITSFIELD, VERMONT
PROJECT NO.: PROJECT NO. BRF 013-4(39) BRIDGE NO. 177
ENGINEER: MCFARLAND JOHNSON
CUSTOMER: A.L. ST. ONGE CONTRACTOR, INC.
ITEM: GIRDER ~ 10G5B
SURFACE PREP.: SSPC-SP10 OPEN HOLES: 15/16ø
PAINT: NONE

APPROVAL	DRAWN VMM 1-28-16	SHEET NO.	JOB NO.
SHOP	CHECKED FM 3-10-16	10B	651

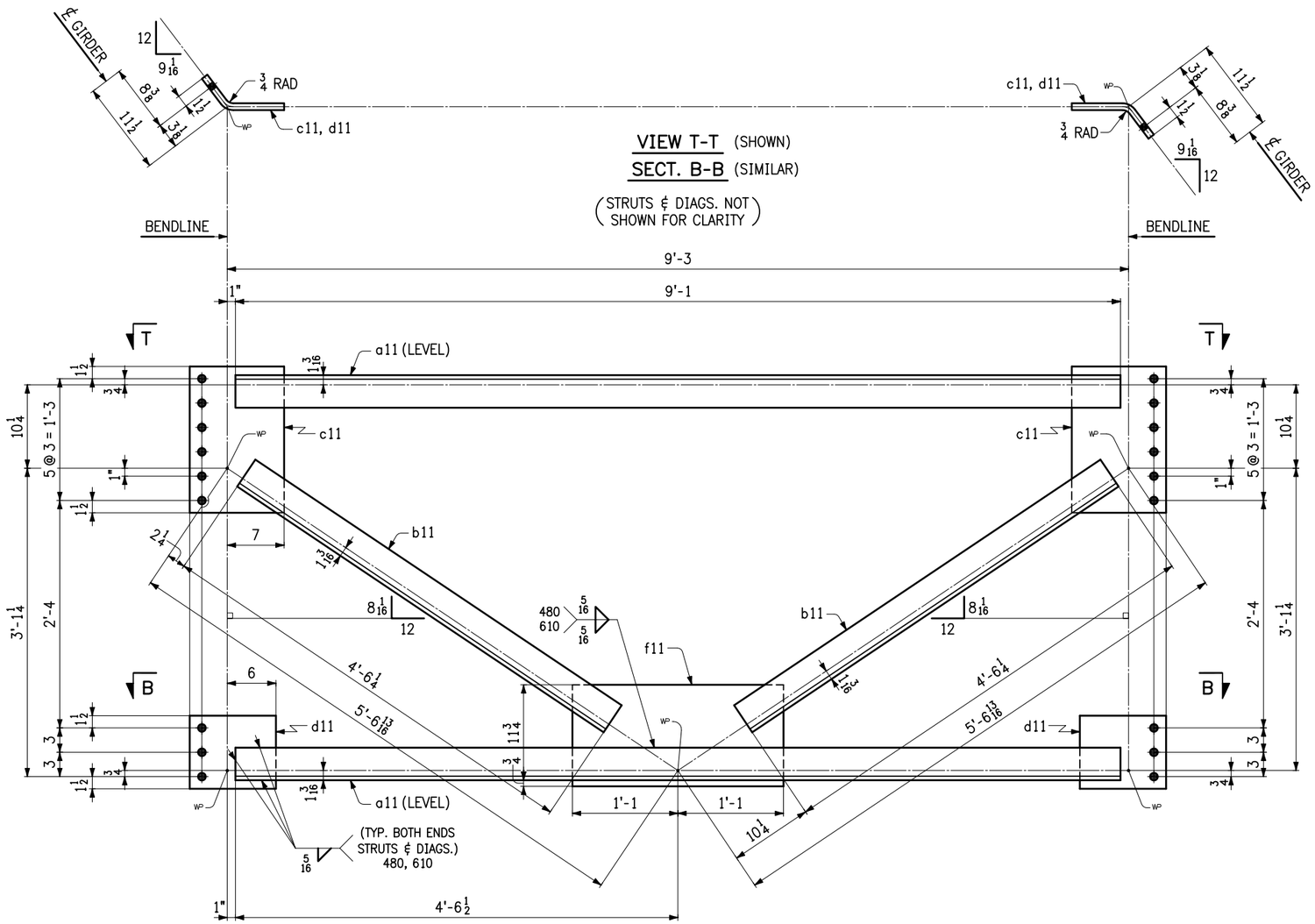

4 ~ END CROSSFRAMES ~ 11CF1

(ABUT. 1)

LINE	NO. OF PCS.	SHIP MARK	ASS'Y MARK	MATERIAL SHAPE	SECTION	LENGTH FT.	LENGTH IN.	MATERIAL SPEC.	ITEM NO.	REMARKS
1	4	11CF1			CROSSFRAMES					480 lbs. ea.
2	8		a11	L	4 x 4 x 1/2	9	1	M270-50W	5/2	232 lbs.
3	8		b11	L	4 x 4 x 1/2	4	6 1/4	M270-50W	5/4	116 lbs.
4	8		c11	PL	1/2 x 18	0	11 5/8	M270-50W	5/5	BENT 59 lbs.
5	8		d11	PL	1/2 x 9	0	10 5/8	M270-50W	5/7	BENT 27 lbs.
6	4		f11	PL	1/2 x 12 1/2	2	2	M270-50W	5/9	46 lbs.
7										
8										
9										
10										
11										
12										
13										
14										
15										
16										
17										
18										
19										
20										
21										
22										
23										
24										
25										

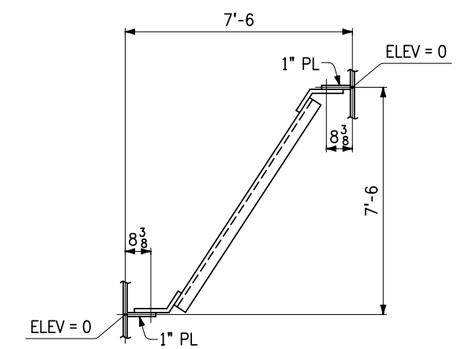

CROSSFRAME ASSEMBLY SKETCH

NOTES:

1. FOR GENERAL NOTES, SEE SHT. GN1.

NO.	DATE	REMARKS	BY

REVISIONS

CASCO BAY STEEL STRUCTURES

CASCO BAY STEEL STRUCTURES
ONE WALLACE AVENUE
SOUTH PORTLAND, ME 04106
PHONE: 207-780-6722
FAX: 207-780-6726

STRUCTURE: VT 100 OVER MAD RIVER
LOCATION: TOWN OF WAITSFIELD, VERMONT
PROJECT NO.: PROJECT NO. BRF 013-4(39) BRIDGE NO. 177
ENGINEER: MCFARLAND JOHNSON
CUSTOMER: A.L. ST. ONGE CONTRACTOR, INC.
ITEM: END CROSSFRAMES AT ABUT. 1
SURFACE PREP.: SSPC-SP10 OPEN HOLES: 15/16 ø
PAINT: NONE

APPROVAL	DRAWN EF 1-25-16	SHEET NO.	JOB NO.
SHOP	CHECKED FM 3-10-16	11	651

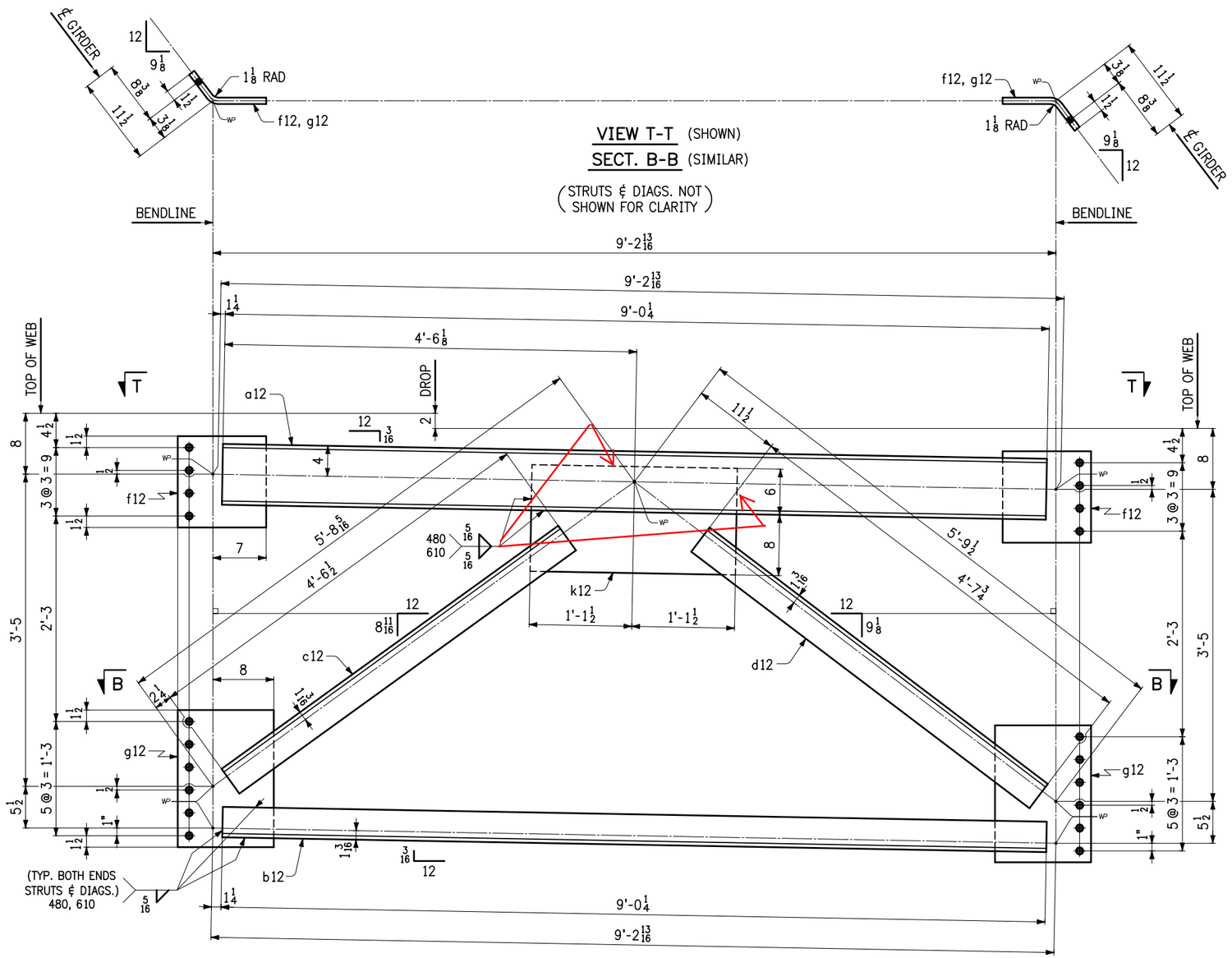

2 ~ END CROSSFRAMES ~ 12CF1

(ABUT. 2)

LINE	NO. OF PCS.	SHIP MARK	ASS'Y MARK	MATERIAL: SHAPE	SECTION	LENGTH FT.	LENGTH IN.	MATERIAL SPEC.	ITEM NO.	REMARKS
1	2	12CF1			CROSSFRAMES					648 lbs. ea.
2	2		a12	MC	8 x 22.8	9	0 1/4	M270-50W	5/3	206 lbs.
3	2		b12	L	4 x 4 x 1/2	9	0 1/4	M270-50W	5/2	115 lbs.
4	2		c12	L	4 x 4 x 1/2	4	6 1/2	M270-50W	5/4	58 lbs.
5	2		d12	L	4 x 4 x 1/2	4	7 3/4	M270-50W	5/4	59 lbs.
6	4		f12	PL	3/4 x 12	0	11 5/8	M270-50W	5/6	BENT 59 lbs.
7	4		g12	PL	3/4 x 18	1	0 5/8	M270-50W	5/8	BENT 97 lbs.
8	2		k12	PL	1/2 x 14	2	3	M270-50W	5/9	54 lbs.
9										
10										
11										
12										
13										
14										
15										
16										
17										
18										
19										
20										
21										
22										
23										
24										
25										

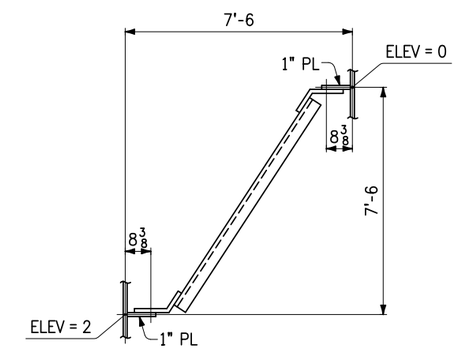

CROSSFRAME ASSEMBLY SKETCH

NOTES:

1. FOR GENERAL NOTES, SEE SHT. GN1.

NO.	DATE	REMARKS	BY

REVISIONS

CASCO BAY STEEL STRUCTURES

CASCO BAY STEEL STRUCTURES
ONE WALLACE AVENUE
SOUTH PORTLAND, ME 04106
PHONE: 207-780-6722
FAX: 207-780-6726

STRUCTURE: VT 100 OVER MAD RIVER
LOCATION: TOWN OF WAITSFIELD, VERMONT
PROJECT NO.: PROJECT NO. BRF 013-4(39) BRIDGE NO. 177
ENGINEER: MCFARLAND JOHNSON
CUSTOMER: A.L. ST. ONGE CONTRACTOR, INC.
ITEM: END CROSSFRAMES AT ABUT. 2
SURFACE PREP.: SSPC-SP10 OPEN HOLES: 15/16 ø
PAINT: NONE

APPROVAL	DRAWN EF 1-28-16	SHEET NO.	JOB NO.
SHOP	CHECKED FM 3-10-16	12	651

1500-13 CF-ABUT2-1500A

Sheet 12 - Plotted: 03/14/2016 @ 09:45 (HEATHER)

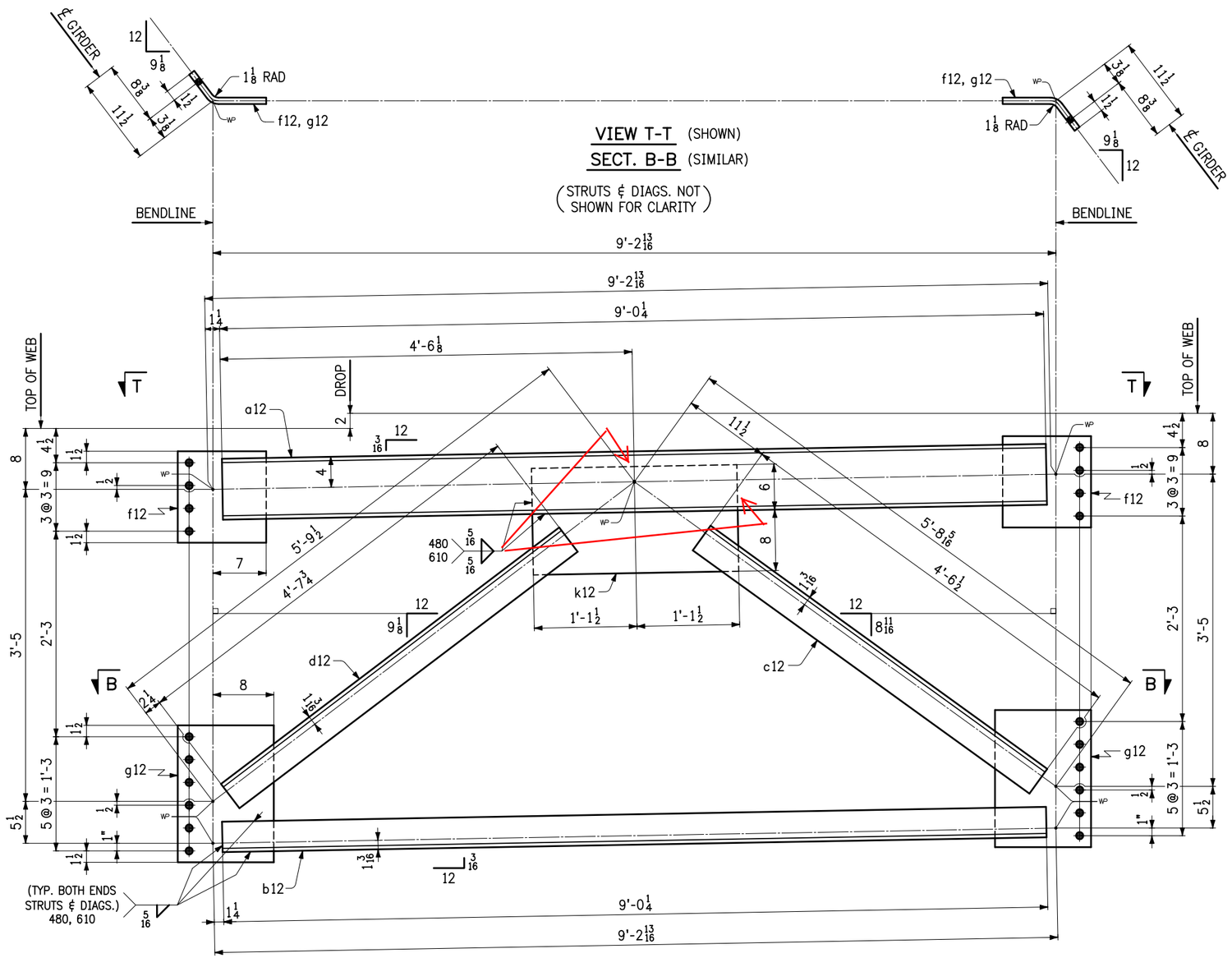

2 ~ END CROSSFRAMES ~ 13CF1

(ABUT. 2)

LINE	NO. OF PCS.	SHIP MARK	ASS'Y MARK	MATERIAL SHAPE	SECTION	LENGTH FT.	LENGTH IN.	MATERIAL SPEC.	ITEM NO.	REMARKS
1	2	13CF1			CROSSFRAMES					648 lbs. ea.
2	2		a12	MC	8 x 22.8	9	0 1/4	M270-50W	5/3	206 lbs.
3	2		b12	L	4 x 4 x 1/2	9	0 1/4	M270-50W	5/2	115 lbs.
4	2		c12	L	4 x 4 x 1/2	4	6 1/2	M270-50W	5/4	58 lbs.
5	2		d12	L	4 x 4 x 1/2	4	7 3/4	M270-50W	5/4	59 lbs.
6	4		f12	PL	3/4 x 12	0	11 5/8	M270-50W	5/6	BENT 59 lbs.
7	4		g12	PL	3/4 x 18	1	0 5/8	M270-50W	5/8	BENT 97 lbs.
8	2		k12	PL	1/2 x 14	2	3	M270-50W	5/9	54 lbs.
9										
10										
11										
12										
13										
14										
15										
16										
17										
18										
19										
20										
21										
22										
23										
24										
25										

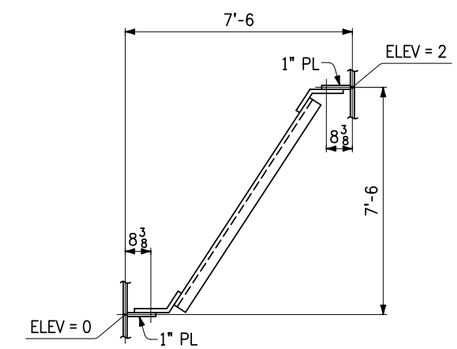

CROSSFRAME ASSEMBLY SKETCH

NOTES:

1. FOR GENERAL NOTES, SEE SHT. GN1.

NO.	DATE	REMARKS	BY

REVISIONS

CASCO BAY STEEL STRUCTURES

CASCO BAY STEEL STRUCTURES
ONE WALLACE AVENUE
SOUTH PORTLAND, ME 04106
PHONE: 207-780-6722
FAX: 207-780-6726

STRUCTURE: VT 100 OVER MAD RIVER
LOCATION: TOWN OF WAITSFIELD, VERMONT
PROJECT NO.: PROJECT NO. BRF 013-4(39) BRIDGE NO. 177
ENGINEER: MCFARLAND JOHNSON
CUSTOMER: A.L. ST. ONGE CONTRACTOR, INC.
ITEM: END CROSSFRAMES AT ABUT. 2
SURFACE PREP.: SSPC-SP10 OPEN HOLES: 15/16 ø
PAINT: NONE

APPROVAL	DRAWN EF 1-28-16	SHEET NO.	JOB NO.
SHOP	CHECKED FM 3-10-16	13	651

1500-13 CF-ABUT2-1500B

Sheet 13 - Plotted: 03/14/2016 @ 09:46 (HEATHER)

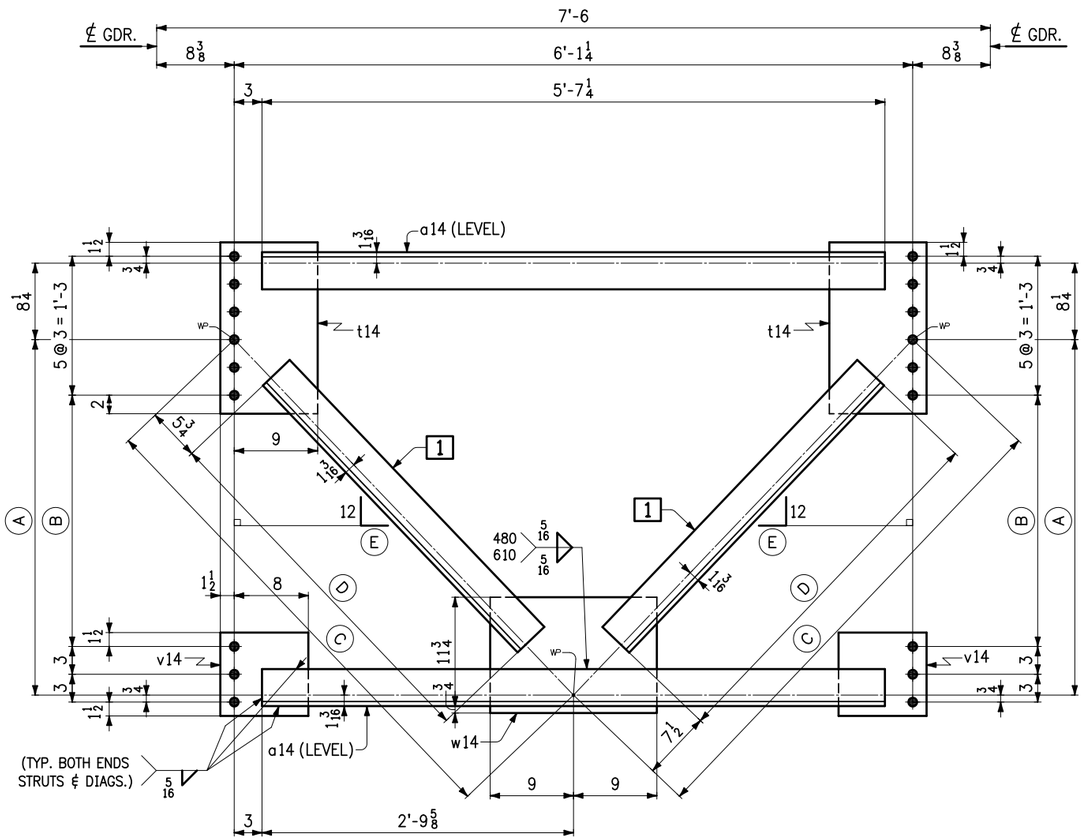

INTERMEDIATE CROSSFRAMES

	MARK	No. REQ'D.	A	B	C	D	E	1
K1	14CF1	8	3'-2 3/8	2'-3 1/8	4'-5 1/16	3'-3 3/4	11 7/16	b14
K2	14CF2	4	3'-2 5/8	2'-3 3/8	4'-5 1/4	3'-4	11 3/8	c14
K3	14CF3	4	3'-2 7/8	2'-3 5/8	4'-5 7/16	3'-4 1/4	11 5/16	d14
K4	14CF4	4	3'-3 3/16	2'-3 15/16	4'-5 5/8	3'-4 3/8	11 3/16	f14
K5	14CF5	2	3'-3 7/16	2'-4 3/16	4'-5 13/16	3'-4 1/2	11 1/8	g14
K6	14CF6	4	3'-3 3/4	2'-4 1/2	4'-6 1/16	3'-4 3/4	11 1/16	k14
K7	14CF7	4	3'-4 1/8	2'-4 7/8	4'-6 5/16	3'-5	10 15/16	m14
K8	14CF8	4	3'-4 3/8	2'-5 1/8	4'-6 1/2	3'-5 1/4	10 7/8	n14
K9	14CF9	2	3'-4 9/16	2'-5 5/16	4'-6 5/8	3'-5 3/8	10 13/16	p14

MATERIAL

LINE	NO. OF PCS.	SHIP MARK	ASS'Y MARK	SHAPE	SECTION	LENGTH FT.	LENGTH IN.	MATERIAL SPEC.	ITEM NO.	REMARKS
39	4	14CF6			CROSSFRAMES					341 lbs. ea.
40	8		a14	L	4 x 4 x 1/2	5	7 1/4	M270-50W	5/13	143 lbs.
41	8		k14	L	4 x 4 x 1/2	3	4 3/4	M270-50W	5/14	87 lbs.
42	8		t14	PL	1/2 x 10 1/2	1	6 1/2	M270-50W	5/15	55 lbs.
43	8		v14	PL	1/2 x 9	0	9 1/2	M270-50W	5/16	24 lbs.
44	4		w14	PL	1/2 x 12 1/2	1	6	M270-50W	5/17	32 lbs.
45										
46	4	14CF7			CROSSFRAMES					341 lbs. ea.
47	8		a14	L	4 x 4 x 1/2	5	7 1/4	M270-50W	5/13	143 lbs.
48	8		m14	L	4 x 4 x 1/2	3	5	M270-50W	5/14	87 lbs.
49	8		t14	PL	1/2 x 10 1/2	1	6 1/2	M270-50W	5/15	55 lbs.
50	8		v14	PL	1/2 x 9	0	9 1/2	M270-50W	5/16	24 lbs.
51	4		w14	PL	1/2 x 12 1/2	1	6	M270-50W	5/17	32 lbs.
52										
53	4	14CF8			CROSSFRAMES					342 lbs. ea.
54	8		a14	L	4 x 4 x 1/2	5	7 1/4	M270-50W	5/13	143 lbs.
55	8		n14	L	4 x 4 x 1/2	3	5 1/4	M270-50W	5/14	88 lbs.
56	8		t14	PL	1/2 x 10 1/2	1	6 1/2	M270-50W	5/15	55 lbs.
57	8		v14	PL	1/2 x 9	0	9 1/2	M270-50W	5/16	24 lbs.
58	4		w14	PL	1/2 x 12 1/2	1	6	M270-50W	5/17	32 lbs.
59										
60	2	14CF9			CROSSFRAMES					342 lbs. ea.
61	4		a14	L	4 x 4 x 1/2	5	7 1/4	M270-50W	5/13	143 lbs.
62	4		p14	L	4 x 4 x 1/2	3	5 3/8	M270-50W	5/14	88 lbs.
63	4		t14	PL	1/2 x 10 1/2	1	6 1/2	M270-50W	5/15	55 lbs.
64	4		v14	PL	1/2 x 9	0	9 1/2	M270-50W	5/16	24 lbs.
65	2		w14	PL	1/2 x 12 1/2	1	6	M270-50W	5/17	32 lbs.
66										
67										
68										
69										
70										
71										
72										
73										
74										
75										
76										

MATERIAL

LINE	NO. OF PCS.	SHIP MARK	ASS'Y MARK	SHAPE	SECTION	LENGTH FT.	LENGTH IN.	MATERIAL SPEC.	ITEM NO.	REMARKS
1	8	14CF1			CROSSFRAMES					339 lbs. ea.
2	16		a14	L	4 x 4 x 1/2	5	7 1/4	M270-50W	5/13	143 lbs.
3	16		b14	L	4 x 4 x 1/2	3	3 3/4	M270-50W	5/14	85 lbs.
4	16		t14	PL	1/2 x 10 1/2	1	6 1/2	M270-50W	5/15	55 lbs.
5	16		v14	PL	1/2 x 9	0	9 1/2	M270-50W	5/16	24 lbs.
6	8		w14	PL	1/2 x 12 1/2	1	6	M270-50W	5/17	32 lbs.
7										
8	4	14CF2			CROSSFRAMES					339 lbs. ea.
9	8		a14	L	4 x 4 x 1/2	5	7 1/4	M270-50W	5/13	143 lbs.
10	8		c14	L	4 x 4 x 1/2	3	4	M270-50W	5/14	85 lbs.
11	8		t14	PL	1/2 x 10 1/2	1	6 1/2	M270-50W	5/15	55 lbs.
12	8		v14	PL	1/2 x 9	0	9 1/2	M270-50W	5/16	24 lbs.
13	4		w14	PL	1/2 x 12 1/2	1	6	M270-50W	5/17	32 lbs.
14										
15	4	14CF3			CROSSFRAMES					340 lbs. ea.
16	8		a14	L	4 x 4 x 1/2	5	7 1/4	M270-50W	5/13	143 lbs.
17	8		d14	L	4 x 4 x 1/2	3	4 1/4	M270-50W	5/14	86 lbs.
18	8		t14	PL	1/2 x 10 1/2	1	6 1/2	M270-50W	5/15	55 lbs.
19	8		v14	PL	1/2 x 9	0	9 1/2	M270-50W	5/16	24 lbs.
20	4		w14	PL	1/2 x 12 1/2	1	6	M270-50W	5/17	32 lbs.
21										
22	4	14CF4			CROSSFRAMES					340 lbs. ea.
23	8		a14	L	4 x 4 x 1/2	5	7 1/4	M270-50W	5/13	143 lbs.
24	8		f14	L	4 x 4 x 1/2	3	4 3/8	M270-50W	5/14	86 lbs.
25	8		t14	PL	1/2 x 10 1/2	1	6 1/2	M270-50W	5/15	55 lbs.
26	8		v14	PL	1/2 x 9	0	9 1/2	M270-50W	5/16	24 lbs.
27	4		w14	PL	1/2 x 12 1/2	1	6	M270-50W	5/17	32 lbs.
28										
29	2	14CF5			CROSSFRAMES					340 lbs. ea.
30	4		a14	L	4 x 4 x 1/2	5	7 1/4	M270-50W	5/13	143 lbs.
31	4		g14	L	4 x 4 x 1/2	3	4 1/2	M270-50W	5/14	86 lbs.
32	4		t14	PL	1/2 x 10 1/2	1	6 1/2	M270-50W	5/15	55 lbs.
33	4		v14	PL	1/2 x 9	0	9 1/2	M270-50W	5/16	24 lbs.
34	2		w14	PL	1/2 x 12 1/2	1	6	M270-50W	5/17	32 lbs.
35										
36										
37										
38										

NOTES:

1. FOR GENERAL NOTES, SEE SHT. GN1.

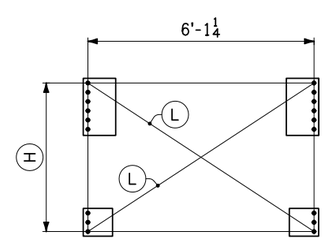

CROSSFRAME FIXTURE LAYOUT

NOTE: HOLES SHOWN ARE WIDEST DIMENSIONS

MARK	H	L
14CF1	4'-0 1/8	7'-3 5/8
14CF2	4'-0 3/8	7'-3 13/16
14CF3	4'-0 5/8	7'-3 15/16
14CF4	4'-0 15/16	7'-4 1/16
14CF5	4'-1 3/16	7'-4 1/4
14CF6	4'-1 1/2	7'-4 7/16
14CF7	4'-1 7/8	7'-4 5/8
14CF8	4'-2 1/8	7'-4 3/4
14CF9	4'-2 5/16	7'-4 7/8

NO.	DATE	REMARKS	BY

REVISIONS

CASCO BAY STEEL STRUCTURES

CASCO BAY STEEL STRUCTURES
ONE WALLACE AVENUE
SOUTH PORTLAND, ME 04106
PHONE: 207-780-6722
FAX: 207-780-6726

STRUCTURE: VT 100 OVER MAD RIVER
LOCATION: TOWN OF WAITSFIELD, VERMONT
PROJECT NO.: PROJECT NO. BRF 013-4(39) BRIDGE NO. 177
ENGINEER: MCFARLAND JOHNSON
CUSTOMER: A.L. ST. ONGE CONTRACTOR, INC.
ITEM: INTERMEDIATE CROSSFRAMES
SURFACE PREP.: SSPC-SP10 OPEN HOLES: 15/16 ø
PAINT: NONE

APPROVAL	DRAWN EF 1-29-16	SHEET NO.	JOB NO.
SHOP	CHECKED FM 3-10-16	14	651

1500-13

CF-INT-1500

Sheet 14 - Plotted: 03/14/2016 @ 09:46 (HEATHER)

Casco Bay Steel Structures

One Wallace Avenue, South Portland ME 04106

AWS - Welding Procedure Specification (WPS)

WeldOffice WPS

WPS record number Date	201 4/24/2014	Revision 1	Qualified to Company name	AWS D1.5 Casco Bay Steel Structures
Supporting PQR(s) Reference docs.	SAW DC + FCM 2-21-14 - Rev 1			

Scope	Fillet, no PWHT (As-welded)
Joint	Joint details for this welding procedure specification in: JOINTS section of this WPS

BASE METALS

Type	Gr50/Gr50W	P-no.	Grp-no. -
Welded to	Gr50/Gr50W	P-no.	Grp-no. -
Backing:	None	P-no.	Grp-no. -
Retainers Notes	All A709 steels with 50 ksi or less are also qualified		

THICKNESS RANGE QUALIFIED (in.)

	As-welded		With PWHT	
	Min.	Max.	Min.	Max.
Complete pen.	-	-	-	-
Impact tested	-	-	-	-
Partial pen.	-	-	-	-
Fillet welds	1/8	All	-	-

DIAMETER RANGE QUALIFIED (in.)

As-welded		With PWHT	
Min.	Max.	Min.	Max.
		-	-

FILLER METALS

THICKNESS RANGE QUALIFIED (in.)

	SFA	Classification	F-no.	A-no.	Chemical analysis or Trade name	As-welded Min.	As-welded Max.	With PWHT Min.	With PWHT Max.
SAW	5.23	ENi1K	6		Lincolnweld LA-75	1/8	All	-	-
Flux	-	-	-	-	- Lincolnweld 960	- None -			
Sup. filler	-	-	-	-	-	- None -			

WELDING PROCEDURE

Welding process		SAW
Type		Machine
Minimum preheat/interpass temperature	(°F)	See Backpage
Maximum interpass temperature	(°F)	490
Filler metal size	(in.)	5/32
Layer number		
Position		F,H
Current/polarity		DCEP
Amperes		604
Volts		29.5
Travel speed	(in./min)	17.1
Maximum heat input	(kJ/in.)	62.5193
Wire feed type		Hot wire
Wire feed speed	(in./min)	N/A
String or weave		Stringer
C.T.W.D	(in.)	
Multi/Single pass per side		Single or Multiple passes
Multiple or single layer		Single or Multiple layer
Oscillation		None
Multi/single electrode		Single electrode
Electrode angle	(deg.)	As needed
Maximum pass thickness	(in.)	See Backpage
Weld deposit chemistry		F8A2-ENi1K-Ni1-H8
Notes		

(c) Copyright 2014 C-spec Software. All rights reserved worldwide.

Casco Bay Steel Structures

One Wallace Avenue, South Portland ME 04106

AWS - Welding Procedure Specification (WPS)

WeldOffice WPS

WPS record number	201	Revision 1	Qualified to	AWS D1.5
Date	4/24/2014		Company name	Casco Bay Steel Structures

JOINTS: Typical joint(s). See actual production drawings and engineering specifications for details.

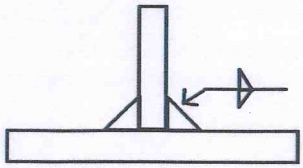

3/8 single pass flat
5/16 single pass Horizontal

	Amps	Volts	Travel Speed
AVG	604 /	29.5 /	17.1 IPM
MIN	544 /	27.4 /	14.5 IPM
MAX	644 /	31.6 /	19.7 IPM

*** Multiple passes may be used if drawing details call for a larger size fillet weld than noted above in the position welding is being performed**

Type of groove	Fillet weld	Minimum groove angle	(deg.)	N/A
		Minimum root opening	(in.)	N/A
		Maximum root face	(in.)	N/A

PREHEAT TABLE

Applicable standard	
AWS D1.5 Bridge Welding Code	For thickness 1/8 to 3/4(in.): 50(°F). Preheat to 70(°F) if the base metal temperature is below 32(°F). Over 3/4 thru 1-1/2(in.): 70(°F). Over 1-1/2 thru 2-1/2(in.): 150(°F). Over 2-1/2(in.): 225(°F). Refer to AWS D1.5 2010 Table 4.3 (pg 85)
AWS D1.5 2010 FCM	For thickness 1/8 to 3/4(in.): 100°F). Over 3/4 thru 1-1/2(in.): 200(°F). Over 1-1/2 thru 2-1/2(in.): 300(°F). Over 2-1/2(in.): 350(°F). No welding to be done if ambient temperature in immediate area is below 0(°F)
New York SCM	Up to 3/4 ----------100 (F) Over 3/4 to 1-1/2 ----------200 (F) Over 1-1/2 to 2-1/2 --------300 (F) Over 2-1/2 ----------350 (F)

TECHNIQUE

Supplementary MF control	
Peening	
Surface preparation	Grind/Blast/chemical/wirebrush clean to be free of moisture, slag, millscale, oils, dust
Initial/interpass cleaning	Brushing and Grinding
Back gouging method	None

NOTES

AWS FCM preheats are taken from AWS D1.5 2010 Clause 12 Table 12.4 and are based upon calculated heat input calculated in accordance with section 5.12 with an as welded H8 designation for the electrode combination we are using. This higher preheat will be used on non weathering steels also.

Signature 1

Name	Signature
Matthew Cote	Matthew J Cote CWI 08051341 QC1 EXP. 5/1/2017
Date	
6/2/2014	

Signature 2

Name	Signature
Date	

Signature 3

Name	Signature
Date	

Signature 4

Name	Signature
Date	

(c) Copyright 2014 C-spec Software. All rights reserved worldwide.

Casco Bay Steel Structures

One Wallace Avenue, South Portland ME 04106

AWS - Welding Procedure Specification (WPS)

WeldOffice WPS

WPS record number Date	250 6/10/2014	Revision	Qualified to Company name	AWS D1.5 Casco Bay Steel Structures
Supporting PQR(s) Reference docs.	SAW FCM 3/32 DC- 5/7/14			

Scope	Fillet, no PWHT (As-welded), impact testing
Joint	Joint details for this welding procedure specification in: JOINTS section of this WPS

BASE METALS

Type	Gr50/Gr50W	P-no.	Grp-no. -
Welded to	Gr50/Gr50W	P-no.	Grp-no. -
Backing:	Yes	P-no.	Grp-no.
Retainers Notes	All A709 with 50 ksi or less are also qualified		

THICKNESS RANGE QUALIFIED (in.)

	As-welded Min.	As-welded Max.	With PWHT Min.	With PWHT Max.
Complete pen.	-	-	-	-
Impact tested	0.625	no max.	-	-
Partial pen.	-	-	-	-
Fillet welds	no min.	no max.	-	-

DIAMETER RANGE QUALIFIED (in.)

	As-welded Min.	As-welded Max.	With PWHT Min.	With PWHT Max.
	N/A	N/A	-	-

FILLER METALS

THICKNESS RANGE QUALIFIED (in.)

	SFA	Classification	F-no.	A-no.	Chemical analysis or Trade name	As-welded Min.	As-welded Max.	With PWHT Min.	With PWHT Max.
SAW	5.23	ENi1K	6		LincolnElectric LA-75	0.125	no max.	-	-
Flux Sup. filler	5.23	F8A2			LIncolnElectric Lincolnweld960	- Required - - Required -			

Flux type	
Flux from recrush. slag	No
Suppl. filler metal vol. (ft³)	N/A

WELDING PROCEDURE

Welding process	SAW
Type	Machine
Minimum preheat/interpass temperature (°F)	See Back Page
Maximum interpass temperature (°F)	400
Filler metal size (in.)	3/32
Layer number	
Position	F,H
Current/polarity	DCEN (straight polarity)
Amperes	363.3
Volts	31.6
Travel speed (in./min)	12.8
Maximum heat input (kJ/in.)	53.8138
Wire feed type	Cold wire
Wire feed speed (in./min)	N/A
String or weave	Stringer
C.T.W.D (in.)	
Multi/Single pass per side	Single or Multiple passes
Multiple or single layer	Single or Multiple layer
Oscillation	None
Multi/single electrode	Single electrode
Electrode angle (deg.)	Varies
Maximum pass thickness (in.)	See Back Page
Weld deposit chemistry	F8A2-ENi1K-Ni1-H8
Notes	

(c) Copyright 2014 C-spec Software. All rights reserved worldwide.

Casco Bay Steel Structures

One Wallace Avenue, South Portland ME 04106

AWS - Welding Procedure Specification (WPS)

WeldOffice WPS

WPS record number	250	Revision	Qualified to	AWS D1.5
Date	6/10/2014		Company name	Casco Bay Steel Structures

JOINTS: Typical joint(s). See actual production drawings and engineering specifications for details.

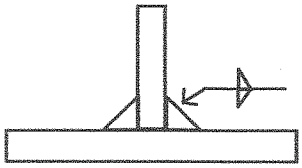

3/8 single pass flat
5/16 single pass Horizontal

	Amps	Volts	Travel Speed
AVG	363.3	31.6	12.8
MIN	326.9	29.4	10.8
MAX	399.6	33.8	14.7

*** Multiple passes may be used if drawing details call for a larger size fillet weld than noted above in the position welding is being performed**

Type of groove	Fillet weld	Minimum groove angle	(deg.)	N/A
		Minimum root opening	(in.)	N/A
		Maximum root face	(in.)	N/A

PREHEAT TABLE

Applicable standard	
AWS D1.5 Bridge Welding Code	For thickness 1/8 to 3/4(in.): 50(°F). Preheat to 70(°F) if the base metal temperature is below 32(°F). Over 3/4 thru 1-1/2(in.): 70(°F). Over 1-1/2 thru 2-1/2(in.): 150(°F). Over 2-1/2(in.): 225(°F). Refer to AWS D1.5 2010 Table 4.3 (pg 85)
AWS D1.5 2010 FCM	For thickness 1/8 to 3/4(in.): 100°F). Over 3/4 thru 1-1/2(in.): 200(°F). Over 1-1/2 thru 2-1/2(in.): 300(°F). Over 2-1/2(in.): 350(°F). No welding to be done if ambient temperature in immediate area is below 0(°F)
New York SCM	Up to 3/4 ----------100 (F) Over 3/4 to 1-1/2 ----------200 (F) Over 1-1/2 to 2-1/2 --------300 (F) Over 2-1/2 ----------350 (F)

TECHNIQUE

Supplementary MF control	
Peening	Not used
Surface preparation	Grind/Blast/chemical/wirebrush clean to be free of moisture, slag, millscale, oils, dust
Initial/interpass cleaning	Brushing and Grinding
Back gouging method	None

NOTES

AWS FCM preheats are taken from AWS D1.5 2010 Clause 12 Table 12.4 and are based upon calculated heat input calculated in accordance with section 5.12 with an as welded H8 designation for the electrode combination we are using. This higher preheat will be used on non weathering steels also.

Signature 1		Signature 2	
Name	Signature	Name	Signature
Matthew Cote	Matthew J Cote CWI 08051341 QC1 EXP. 5/1/2017		
Date		Date	
6/10/14			

Signature 3		Signature 4	
Name	Signature	Name	Signature
Date		Date	

(c) Copyright 2014 C-spec Software. All rights reserved worldwide.

Casco Bay Steel Structures

One Wallace Ave, South Portland ME 04106

AWS - Prequalified Welding Procedure Specification (pWPS)

WeldOffice WPS

Identification #	480 Rev.
Originated by	Matthew Cote
Date	7/22/2014
Authorized by	Matthew J Cote
Date	7/22/2014

Company name	Casco Bay Steel Structures
Welding process	SMAW
Process type	Manual

Joint design used

Joint type	T - T joint
Joint design	Fillet Weld
Backing	No
Backing material	Not Applicable
Root opening (R)* (in.)	
Root face (f)* (in.)	
Groove angle (a)* (deg.)	
Radius (J - U)* (deg.)	
Back gouging	No
Back gouging method	None

* Datum, As Detailed (As Fit-Up)

Base metals

Spec., type or grade	Gr 50/ Gr50W
Thickness: Groove (in.)	
Fillet (in.)	1/8" and above
Diameter (Pipe) (in.)	

Filler metals

AWS Specification	A5.5
AWS Classification	E-8018 H4R

Shielding

Flux	-
Electrode-flux (class)	-
Gas composition	-
Gas flow rate (cfh)	-
Gas cup size (in.)	-

Position

Welding position: Groove	
Fillet	All
Vertical progression	Up

Electrical characteristics

Transfer mode (GMAW)	N/A
Current type	Other
Other	DC+ and AC

Technique

Stringer or weave bead	Stringer or Weave
Multi/single pass (per side)	Single or Multiple
Number of electrodes	Varies
Spacing: Longitudinal (in.)	-
Lateral (in.)	-
Angle (deg.)	-
Contact tube to work (in.)	-
Peening	Not permitted
Interpass cleaning	Brushing or grinding

Preheat

Preheat temp.: Min. (°F)	See notes
Interpass temp.: Min. (°F)	See notes
Max. (°F)	450

Post weld heat treatment

Temperature (°F)	None
Time (hrs)	-

Welding procedure

Layer	Pass	Process	Filler metal class	Filler metal diameter (in.)	Current type / polarity	Amps	Wire feed speed (in./min)	Volts	Travel speed (in./min)	Joint details
1	All	SMAW	E-8018 H4R	1/8	DCEP	100-160	-	n/a	varies	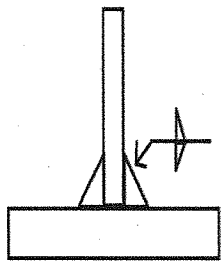
1	All	SMAW	E-8018 H4R	1/8	AC	90-160	-	n/a	varies	
1	All	SMAW	E-8018 H4R	5/32	DCEP	140-210	-	n/a	varies	
1	All	SMAW	E-8018 H4R	5/32	AC	130-210	-	n/a	varies	
1	All	SMAW	E-8018 H4R	3/16	DCEP	200-300	-	n/a	varies	
1	All	SMAW	E-8018 H4R	3/16	AC	180-300	-	n/a	varies	
								Designation		FILLET

Notes

LINCOLN ELECTRIC EXCALIBUR 8018-C3 MR

SEE BACKSIDE FOR MORE DETAILS

Signature 1

Name	Signature
Matthew J Cote	
Date	
7/22/2014	

Matthew J Cote
CWI 08051341
QC1 EXP 5/1/2017

Signature 2

Name	Signature
Date	

Signature 3

Name	Signature
Date	

Signature 4

Name	Signature
Date	

(c) Copyright 2014 C-spec Software. All rights reserved worldwide.

Identification #	480	Rev.

AWS D1.5 2010

Single Pass Fillet weld in 1F position, No bigger than 3/8 in a single pass
Single Pass Fillet weld in 2F, 4F position, No bigger than 5/16 in a single pass
Single Pass Fillet weld in 3F position, No biger than 1/2 in a single pass

For thickness 1/8 to 3/4(in.): 50°F). Preheat to 70(°F) if the base metal temperature is below 32(°F).
Over 3/4 thru 1-1/2(in.): 70(°F).
Over 1-1/2 thru 2-1/2(in.): 150(°F).
Over 2-1/2(in.): 225(°F). Refer to AWS D1.5 2010 Table 4.3 (pg85)

FOR FRACTURE CRITICAL WELDS

For thickness 1/8 to 3/4(in.): 125°F).
Over 3/4 thru 1-1/2(in.): 200(°F).
Over 1-1/2 thru 2-1/2(in.): 300(°F).
Over 2-1/2(in.): 350(°F). No welding to be done if ambient temperature in immediate area is below 0(°F)

ALL VERTICAL WELDING SHALL BE DONE UPWARD

IF A GAP FROM 1/16 TO 3/16 IS EVIDENT, INCREASE WELD SIZE 1/16 FOR EACH 1/16 GAP

EX 1/16 GAP IS +1/16 FROM DETAILED SIZE
1/8 GAP IS +1/8 FROM DETAILED SIZE
3/16 GAP IS +3/16 FROM DETAILED SIZE

Preheats to the NYSSCM

	Gr 50	Gr 50W
to 3/4	50F	100F
over 3/4 to 1-1/2	70F	200F
over 1-1/2 to 2-1/2	150F	300F
over 2-1/2	225	350F

(c) Copyright 2014 C-spec Software. All rights reserved worldwide.

Casco Bay Steel Structures, Inc.

WELDING PROCEDURE SPECIFICATION

Material specification: ASTM Gr. 50 + G-50W
Welding process: Gas Metal ARC Welding (GMAW)
Manual or machine: Semi Auto
Position of welding: Flat + Horizontal
Filler metal specification: AWS-A5.28 ESAB
Filler metal classification: E80C-Ni1
Flux: N A
Shielding gas: 90% AR / 10% CO^2 Flow rate: 35 CFH +8/-4, Elec. Stickout 5/8
Single or multiple pass: Single + multiple
Single or multiple arc: Single
Welding current: DC
Polarity: DCEP
Welding progression: See Detail
Root treatment: Blast Clean-wire Brush-Area To be Free of slag-Rust-Moisture
Preheat and interpass temperature: See Table and as Required
Posfheat temperature: As Required
Heat Input Min 24.4 KJ/in Max 38.3 KJ/in P.Q.R. 418-FCM=34.8 KJ/IN
* 35.0 KJ/in Min for single pass

Minimum Preheat and Interpass Temperature, °C [°F]

Welding Process (Base Metal)	To 20 mm [3/4 in] Incl.	Over 20 mm [3/4 in] to 40 mm [1-1/2 in] Incl.	Over 40 mm [1-1/2 in] to 65 mm [2-1/2 in] Incl	Over 65 mm [2-1/2 in]
		Thickness of Thickest Part at Point of Welding, mm [in]		
SAW; GMAW; FCAW; SMAW (M270M [M270] [A 709M (A 709)] 345 [50].	10 [50]	20 [70]	65 [150]	110 [225]
FCM Gr50	150°F	200°F	225°F	325°F
FCM Gr50W	150°F	250°F	325°F	350°F

Preheats to the NYSSCM

	Gr 50	Gr 50W
to 3/4	50F	100F
over 3/4 to 1-1/2	70F	200F
over 1-1/2 to 2-1/2	150F	300F
over 2-1/2	225	350F

WELDING PROCEDURE

Max Interpass 440°F

Sec. 5.12.4.2

AWS D1.5 Joint detail Fillet

Pass no.	Electrode size	Welding current Amperes	Volts	Travel speed
AS REQ	.052	307	29.2	15.5
		338.7 To 276.3	31 To 27	17.5 To 13.5
* 1 Pass	.052	338.7 to 281.3	31 to 28.0	17.5 to 13.5

2F

To 3/8

To 5/8

To 1/2

1F

This procedure may vary due to fabrication sequence, fit-up, pass size, etc., within the limitation of variables given in applicable A.W.S. codes or contract specifications

Procedure no. FCM 610

Revision no.

Contractor Casco Bay Steel

Authorized By Paul E. Goodale

Date 8-1-2013