J.P. CARRARA & SONS, INC.
PRECAST/PRESTRESSED CONCRETE PRODUCTS

REQUEST FOR INFORMATION

TO: Artie St. Onge	FROM: Mike Davis / Mike Weigand
COMPANY: A.L. St. Onge Contractor	DATE: 5/24/16
FAX NUMBER: 802-326-4005	TOTAL NO. OF PAGES INCLUDING COVER: 1 plus Attachments
PHONE NUMBER: 802-326-4792	SENDER'S REFERENCE NUMBER: **RFI #9**

RE:
Waitsfield BRF 013-4(39) - Bridge No. 177; VT 100 over Mad River
Waitsfield, VT

☐ URGENT ☑ FOR REVIEW ☑ PLEASE COMMENT ☐ PLEASE REPLY ☐ FOR YOUR USE

PLEASE PROVIDE AND/OR CLARIFY THE FOLLOWING:

RFI #9: Abutment #1: Wingwall #1 & #2 Two-Stage Fabrication

J. P. Carrara & Sons, Inc. "JPC" proposes to fabricate Wingwall #1 and Wingwall #2 in two stages with a cold joint at the 'top of footing' elevation, 2'6" above the bottom of the walls. This proposed primary and secondary placement of concrete in the plant will assist with the concrete forming and accommodation of hydrostatic pressure associated with fabricating an irregularly shaped product.

As shown on the attached pour sequence drawings WW1.2 and WW2.2, JPC proposes to roughen the top surface of the footing portion of the wingwalls with a ¼" amplitude at the interface between hardened and fresh concrete.

All other detailing in the wingwalls shall be in accordance with approved drawings and details, and embedded reinforcing steel and lift loops shall be placed in the primary placement as detailed and shall be encased in the secondary placement of concrete.

Please contact us at 802-388-6363 with any questions or to discuss.

2464 CASE STREET, MIDDLEBURY, VERMONT 05753
T (802)388-6363 F (802)388-9010

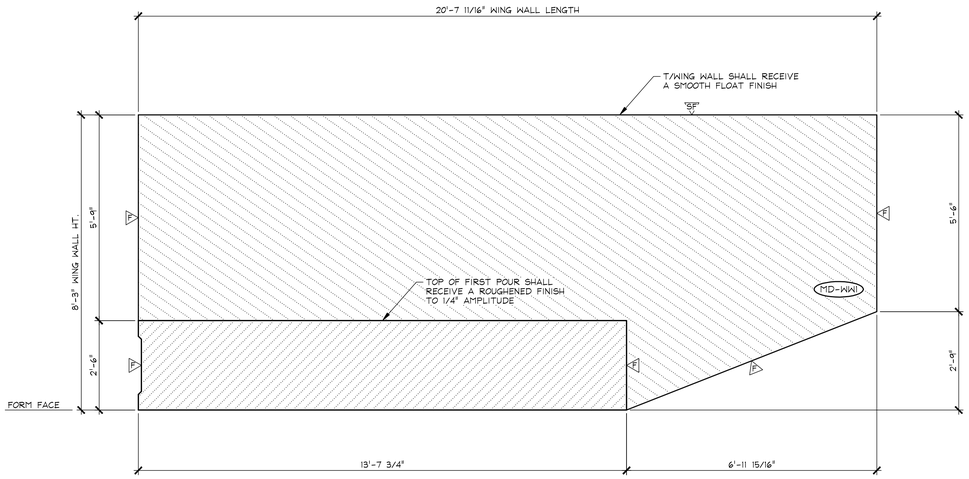

1 WW1.2 POUR SEQUENCE ELEVATION MARK FACE 1/2" = 1'-0"

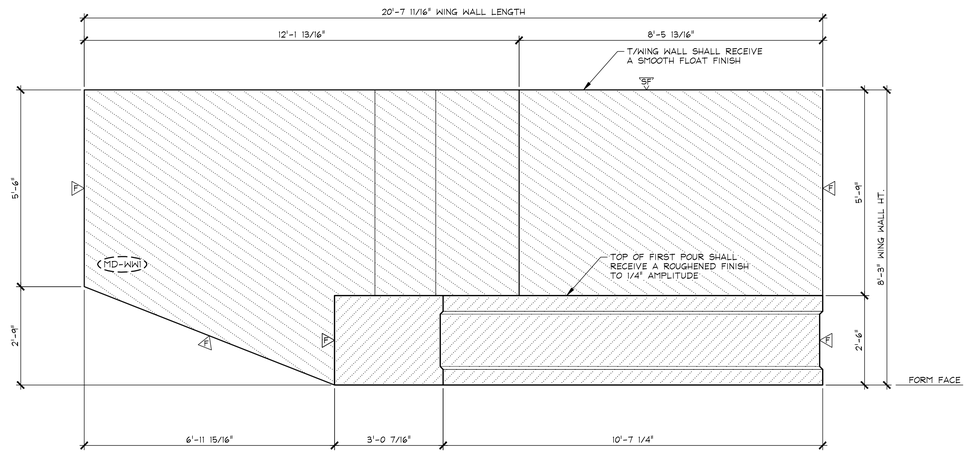

2 WW1.2 POUR SEQUENCE ELEVATION NON-MARK FACE 1/2" = 1'-0"

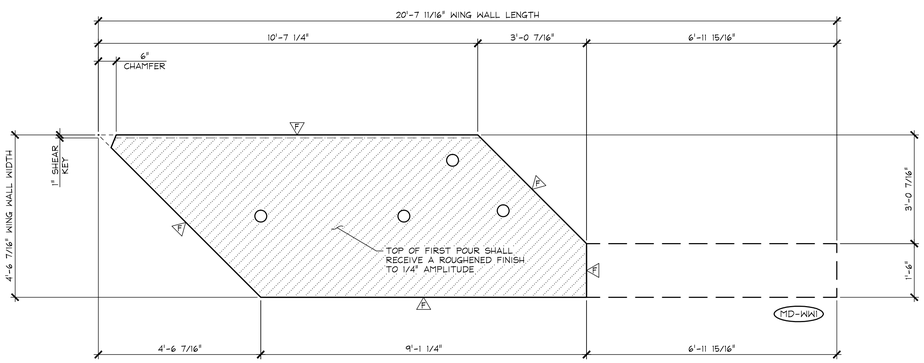

3 WW1.2 FIRST POUR PLAN VIEW IN FORM 1/2" = 1'-0"

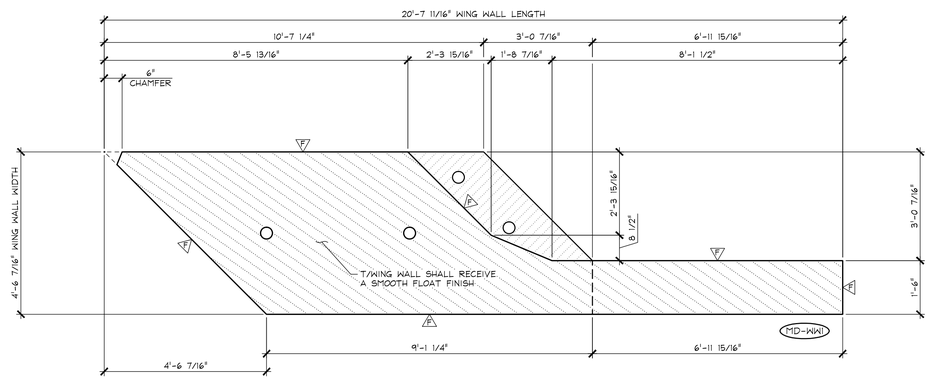

4 WW1.2 SECONDARY POUR PLAN VIEW IN FORM 1/2" = 1'-0"

F DENOTES FORM FINISH
SF DENOTES SMOOTH FLOAT FINISH

APPROVAL STAMP:

J.P. CARRARA & SONS INC.
Precast & Prestress Manufacturer
2464 CASE STR., MIDDLEBURY, VERMONT 05753 Phone:(802)388-6361 Fax:(802)388-9010

A.L. ST. ONGE CONTRACTOR, INC.
CONTRACTOR
MONTGOMERY, VERMONT

STATE OF VERMONT AGENCY OF TRANSPORTATION
COUNTY OF WINDSOR

TOWN OF WAITSFIELD
VT ROUTE 100 (MINOR ARTERIAL)
BRIDGE NO.: 177 PROJECT NO.: BRF 013-4(39)

PRECAST WING WALL
POUR SEQUENCE DETAILS

DATE:	MAY 24, 2016
SCALE:	NOTED
CHKD: -	DFTM: B.L.
JOB NO:	23480-016
DWG. NO:	WW1.2

F:\VT-Bridges\23480-15 Waitsfield\23480-WW1-2.dwg, 5/24/2016 10:55:19 AM

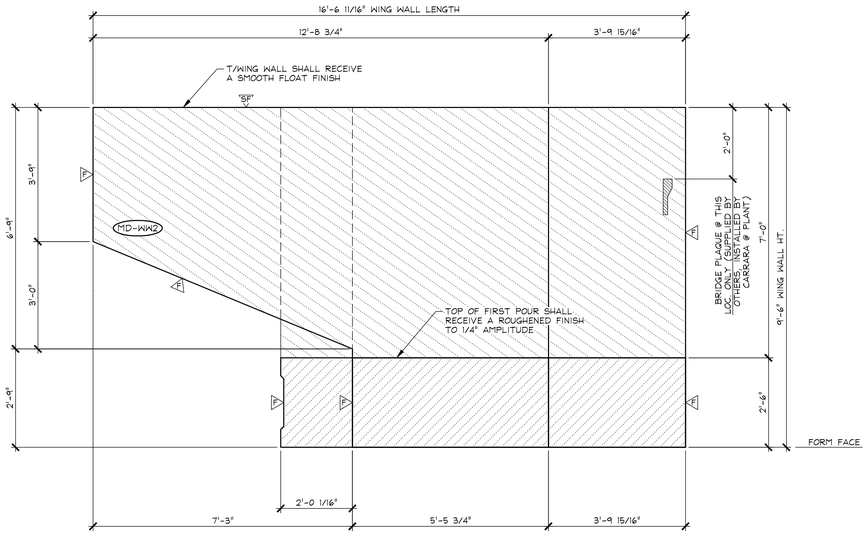

1 WW2.2 POUR SEQUENCE ELEVATION MARK FACE 1/2" = 1'-0"

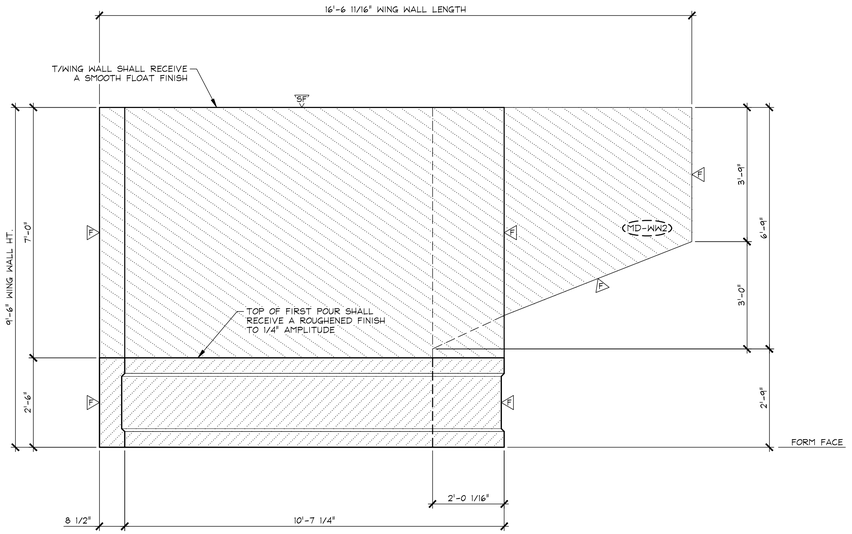

2 WW2.2 POUR SEQUENCE ELEVATION NON-MARK FACE 1/2" = 1'-0"

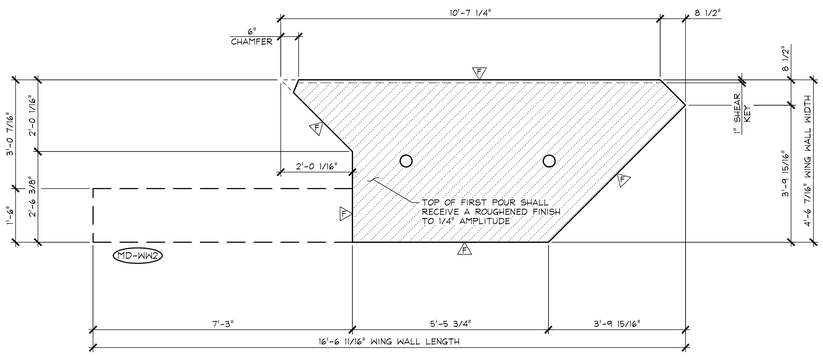

3 WW2.2 FIRST POUR PLAN VIEW IN FORM 1/2" = 1'-0"

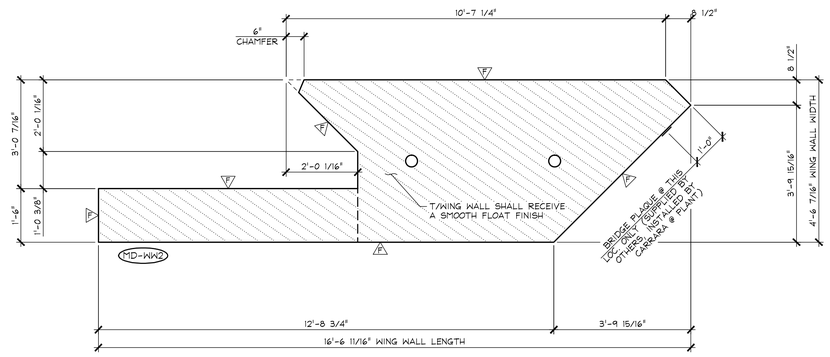

4 WW2.2 SECONDARY POUR PLAN VIEW IN FORM 1/2" = 1'-0"

F DENOTES FORM FINISH
SF DENOTES SMOOTH FLOAT FINISH

APPROVAL STAMP:

J.P. CARRARA & SONS INC.
Precast & Prestress Manufacturer
2464 CASE STR., MIDDLEBURY, VERMONT 05753 Phone:(802)388-6361 Fax:(802)388-9010

A.L. ST. ONGE CONTRACTOR, INC.
CONTRACTOR
MONTGOMERY, VERMONT

STATE OF VERMONT AGENCY OF TRANSPORTATION
COUNTY OF WINDSOR

TOWN OF WAITSFIELD
VT ROUTE 100 (MINOR ARTERIAL)
BRIDGE NO.: 177 PROJECT NO.: BRF 013-4(39)

PRECAST WING WALL
POUR SEQUENCE DETAILS

DATE:	MAY 24, 2016
SCALE:	NOTED
CHKD: -	DFTM: B.L.
JOB NO:	23480-016
DWG. NO:	WW2.2

F:\VT-Bridges\23480-15 Waitsfield\23480-WW2-2.dwg, 5/24/2016 10:55:04 AM