Casco Bay Steel Structures

One Wallace Avenue, South Portland ME 04106

AWS - Welding Procedure Specification (WPS)

WeldOffice WPS

WPS record number Date	201 4/24/2014	Revision 1	Qualified to Company name	AWS D1.5 Casco Bay Steel Structures
Supporting PQR(s) Reference docs.	SAW DC + FCM 2-21-14 - Rev 1			

Scope	Fillet, no PWHT (As-welded)
Joint	Joint details for this welding procedure specification in: JOINTS section of this WPS

BASE METALS

Type	Gr50/Gr50W	P-no.	Grp-no. -
Welded to	Gr50/Gr50W	P-no.	Grp-no. -
Backing:	None	P-no.	Grp-no. -
Retainers Notes	All A709 steels with 50 ksi or less are also qualified		

THICKNESS RANGE QUALIFIED (in.)

	As-welded		With PWHT	
	Min.	Max.	Min.	Max.
Complete pen.	-	-	-	-
Impact tested	-	-	-	-
Partial pen.	-	-	-	-
Fillet welds	1/8	All	-	-

DIAMETER RANGE QUALIFIED (in.)

As-welded		With PWHT	
Min.	Max.	Min.	Max.
		-	-

FILLER METALS

THICKNESS RANGE QUALIFIED (in.)

	SFA	Classification	F-no.	A-no.	Chemical analysis or Trade name	As-welded Min.	As-welded Max.	With PWHT Min.	With PWHT Max.
SAW	5.23	ENi1K	6		Lincolnweld LA-75	1/8	All	-	-
Flux	-	-	-	-	- Lincolnweld 960	- None -			
Sup. filler	-	-	-	-	-	- None -			

WELDING PROCEDURE

Welding process		SAW
Type		Machine
Minimum preheat/interpass temperature	(°F)	See Backpage
Maximum interpass temperature	(°F)	490
Filler metal size	(in.)	5/32
Layer number		
Position		F,H
Current/polarity		DCEP
Amperes		604
Volts		29.5
Travel speed	(in./min)	17.1
Maximum heat input	(kJ/in.)	62.5193
Wire feed type		Hot wire
Wire feed speed	(in./min)	N/A
String or weave		Stringer
C.T.W.D	(in.)	
Multi/Single pass per side		Single or Multiple passes
Multiple or single layer		Single or Multiple layer
Oscillation		None
Multi/single electrode		Single electrode
Electrode angle	(deg.)	As needed
Maximum pass thickness	(in.)	See Backpage
Weld deposit chemistry		F8A2-ENi1K-Ni1-H8
Notes		

(c) Copyright 2014 C-spec Software. All rights reserved worldwide.

Casco Bay Steel Structures

One Wallace Avenue, South Portland ME 04106

AWS - Welding Procedure Specification (WPS)

WeldOffice WPS

WPS record number	201	Revision 1	Qualified to	AWS D1.5
Date	4/24/2014		Company name	Casco Bay Steel Structures

JOINTS: Typical joint(s). See actual production drawings and engineering specifications for details.

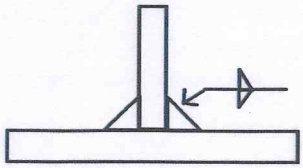

3/8 single pass flat
5/16 single pass Horizontal

	Amps	Volts	Travel Speed
AVG	604 /	29.5 /	17.1 IPM
MIN	544 /	27.4 /	14.5 IPM
MAX	644 /	31.6 /	19.7 IPM

*** Multiple passes may be used if drawing details call for a larger size fillet weld than noted above in the position welding is being performed**

Type of groove	Fillet weld	Minimum groove angle	(deg.)	N/A
		Minimum root opening	(in.)	N/A
		Maximum root face	(in.)	N/A

PREHEAT TABLE

Applicable standard	
AWS D1.5 Bridge Welding Code	For thickness 1/8 to 3/4(in.): 50(°F). Preheat to 70(°F) if the base metal temperature is below 32(°F). Over 3/4 thru 1-1/2(in.): 70(°F). Over 1-1/2 thru 2-1/2(in.): 150(°F). Over 2-1/2(in.): 225(°F). Refer to AWS D1.5 2010 Table 4.3 (pg 85)
AWS D1.5 2010 FCM	For thickness 1/8 to 3/4(in.): 100°F). Over 3/4 thru 1-1/2(in.): 200(°F). Over 1-1/2 thru 2-1/2(in.): 300(°F). Over 2-1/2(in.): 350(°F). No welding to be done if ambient temperature in immediate area is below 0(°F)
New York SCM	Up to 3/4 ----------100 (F) Over 3/4 to 1-1/2 ----------200 (F) Over 1-1/2 to 2-1/2 --------300 (F) Over 2-1/2 ----------350 (F)

TECHNIQUE

Supplementary MF control	
Peening	
Surface preparation	Grind/Blast/chemical/wirebrush clean to be free of moisture, slag, millscale, oils, dust
Initial/interpass cleaning	Brushing and Grinding
Back gouging method	None

NOTES

AWS FCM preheats are taken from AWS D1.5 2010 Clause 12 Table 12.4 and are based upon calculated heat input calculated in accordance with section 5.12 with an as welded H8 designation for the electrode combination we are using. This higher preheat will be used on non weathering steels also.

Signature 1

Name	Signature
Matthew Cote	Matthew J Cote CWI 08051341 QC1 EXP. 5/1/2017
Date	
6/2/2014	

Signature 2

Name	Signature
Date	

Signature 3

Name	Signature
Date	

Signature 4

Name	Signature
Date	

(c) Copyright 2014 C-spec Software. All rights reserved worldwide.

Casco Bay Steel Structures

One Wallace Avenue, South Portland ME 04106

AWS - Welding Procedure Specification (WPS)

WeldOffice WPS

WPS record number Date	203 Revision 1 4/24/2014	Qualified to Company name	AWS D1.5 Casco Bay Steel Structures
Supporting PQR(s) Reference docs.	SAW DC + FCM 2-21-14 - Rev 1		

Scope	Groove, no PWHT (As-welded)
Joint	Joint details for this welding procedure specification in: JOINTS section of this WPS

BASE METALS

Type	Gr50/Gr50W	P-no.	Grp-no. -
Welded to	Gr50/Gr50W	P-no.	Grp-no. -
Backing:	None	P-no.	Grp-no. -
Retainers Notes	All A709 steels with 50 ksi or less are also qualified		

THICKNESS RANGE QUALIFIED (in.)

	As-welded Min.	As-welded Max.	With PWHT Min.	With PWHT Max.
Complete pen.	over 1/2	2	-	-
Impact tested	-	-	-	-
Partial pen.	NO	-	-	-
Fillet welds	-	-	-	-

DIAMETER RANGE QUALIFIED (in.)

	As-welded Min.	As-welded Max.	With PWHT Min.	With PWHT Max.
			-	-

FILLER METALS

	SFA	Classification	F-no.	A-no.	Chemical analysis or Trade name	THICKNESS RANGE QUALIFIED (in.) As-welded Min.	As-welded Max.	With PWHT Min.	With PWHT Max.
SAW	5.23	ENi1K	6		Lincolnweld LA-75	over 1/2	2	-	-
Flux Sup. filler	5.23 -	F8A2 -	6 -	-	Lincolnweld 960 -	- Required - - None -			
Flux type Flux from recrush. slag	No								

WELDING PROCEDURE

Welding process		SAW
Type		Machine
Minimum preheat/interpass temperature	(°F)	See Backpage
Maximum interpass temperature	(°F)	490
Filler metal size	(in.)	5/32
Layer number		
Position		F
Current/polarity		DCEP
Amperes		604
Volts		29.5
Travel speed	(in./min)	17.1
Maximum heat input	(kJ/in.)	62.5193
Wire feed type		Hot wire
Wire feed speed	(in./min)	N/A
String or weave		Stringer
C.T.W.D	(in.)	
Multi/Single pass per side		Single or Multiple passes
Multiple or single layer		Single or Multiple layer
Oscillation		None
Multi/single electrode		Single electrode
Electrode angle	(deg.)	As needed
Maximum pass thickness	(in.)	
Weld deposit chemistry		F8A2-ENi1K-Ni1-H8
Notes		

(c) Copyright 2014 C-spec Software. All rights reserved worldwide.

Casco Bay Steel Structures

One Wallace Avenue, South Portland ME 04106

AWS - Welding Procedure Specification (WPS)

WeldOffice WPS

WPS record number	203	Revision 1	Qualified to	AWS D1.5
Date	4/24/2014		Company name	Casco Bay Steel Structures

JOINTS: Typical joint(s). See actual production drawings and engineering specifications for details.

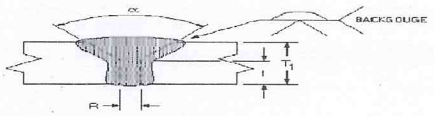

	Amps	Volts	Travel Speed
AVG	604 /	29.5 /	17.1 IPM
MIN	544 /	27.4 /	14.5 IPM
MAX	644 /	31.6 /	19.7 IPM

BL2c-S

Over 1/2" to 1" (1/4 root face min)
Over 1" to 1-1/2" (3/8 root face min)
Over 1-1/2" to 2" (1/2 root face min)

*backside shall be backgouged prior to welding

Type of groove	Single-V-groove	Minimum groove angle	(deg.)	55 to 70
		Minimum root opening	(in.)	0 to 1/16
		Maximum root face	(in.)	varies

PREHEAT TABLE

Applicable standard	
AWS D1.5 Bridge Welding Code	For thickness 1/8 to 3/4(in.): 50°F). Preheat to 70(°F) if the base metal temperature is below 32(°F). Over 3/4 thru 1-1/2(in.): 70(°F). Over 1-1/2 thru 2-1/2(in.): 150(°F). Over 2-1/2(in.): 225(°F). Refer to AWS D1.5 2010 Table 4.3 (pg 85)
AWS D1.5 2010 FCM	For thickness 1/8 to 3/4(in.): 100°F). Over 3/4 thru 1-1/2(in.): 200(°F). Over 1-1/2 thru 2-1/2(in.): 300(°F). Over 2-1/2(in.): 350(°F). No welding to be done if ambient temperature in immediate area is below 0(°F)
New York SCM	Up to 3/4 ----------100 (F) Over 3/4 to 1-1/2 ----------200 (F) Over 1-1/2 to 2-1/2 --------300 (F) Over 2-1/2 ----------350 (F)

TECHNIQUE

Supplementary MF control	
Peening	
Surface preparation	Grind/Blast/chemical/wirebrush clean to be free of moisture, slag, millscale, oils, dust
Initial/interpass cleaning	Brushing and Grinding
Back gouging method	Grinding or Air Carbon Arc Gouging

NOTES

AWS FCM preheats are taken from AWS D1.5 2010 Clause 12 Table 12.4 and are based upon calculated heat input calculated in accordance with section 5.12 with an as welded H8 designation for the electrode combinationwe are using. This higher preheat will be used on non weathering steels also.

Signature 1

Name	Signature
Matthew Cote	
Date	
6/2/14	

Matthew J Cote
CWI 08051341
QC1 EXP. 5/1/2017

Signature 2

Name	Signature
Date	

Signature 3

Name	Signature
Date	

Signature 4

Name	Signature
Date	

(c) Copyright 2014 C-spec Software. All rights reserved worldwide.

Casco Bay Steel Structures

One Wallace Avenue, South Portland ME 04106

AWS - Welding Procedure Specification (WPS)

WeldOffice WPS

WPS record number Date	250 6/10/2014	Revision	Qualified to Company name	AWS D1.5 Casco Bay Steel Structures
Supporting PQR(s) Reference docs.	SAW FCM 3/32 DC- 5/7/14			

Scope	Fillet, no PWHT (As-welded), impact testing
Joint	Joint details for this welding procedure specification in: JOINTS section of this WPS

BASE METALS

Type	Gr50/Gr50W	P-no.	Grp-no. -
Welded to	Gr50/Gr50W	P-no.	Grp-no. -
Backing:	Yes	P-no.	Grp-no.
Retainers Notes	All A709 with 50 ksi or less are also qualified		

THICKNESS RANGE QUALIFIED (in.)

	As-welded Min.	As-welded Max.	With PWHT Min.	With PWHT Max.
Complete pen.	-	-	-	-
Impact tested	0.625	no max.	-	-
Partial pen.	-	-	-	-
Fillet welds	no min.	no max.	-	-

DIAMETER RANGE QUALIFIED (in.)

	As-welded Min.	As-welded Max.	With PWHT Min.	With PWHT Max.
	N/A	N/A	-	-

FILLER METALS

THICKNESS RANGE QUALIFIED (in.)

	SFA	Classification	F-no.	A-no.	Chemical analysis or Trade name	As-welded Min.	As-welded Max.	With PWHT Min.	With PWHT Max.
SAW	5.23	ENi1K	6		LincolnElectric LA-75	0.125	no max.	-	-
Flux Sup. filler	5.23	F8A2			LIncolnElectric Lincolnweld960	- Required - - Required -			

Flux type	
Flux from recrush. slag	No
Suppl. filler metal vol. (ft³)	N/A

WELDING PROCEDURE

Welding process	SAW
Type	Machine
Minimum preheat/interpass temperature (°F)	See Back Page
Maximum interpass temperature (°F)	400
Filler metal size (in.)	3/32
Layer number	
Position	F,H
Current/polarity	DCEN (straight polarity)
Amperes	363.3
Volts	31.6
Travel speed (in./min)	12.8
Maximum heat input (kJ/in.)	53.8138
Wire feed type	Cold wire
Wire feed speed (in./min)	N/A
String or weave	Stringer
C.T.W.D (in.)	
Multi/Single pass per side	Single or Multiple passes
Multiple or single layer	Single or Multiple layer
Oscillation	None
Multi/single electrode	Single electrode
Electrode angle (deg.)	Varies
Maximum pass thickness (in.)	See Back Page
Weld deposit chemistry	F8A2-ENi1K-Ni1-H8
Notes	

(c) Copyright 2014 C-spec Software. All rights reserved worldwide.

Casco Bay Steel Structures

One Wallace Avenue, South Portland ME 04106

AWS - Welding Procedure Specification (WPS)

WeldOffice WPS

WPS record number	250	Revision	Qualified to	AWS D1.5
Date	6/10/2014		Company name	Casco Bay Steel Structures

JOINTS: Typical joint(s). See actual production drawings and engineering specifications for details.

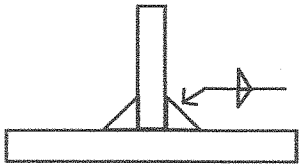

3/8 single pass flat
5/16 single pass Horizontal

	Amps	Volts	Travel Speed
AVG	363.3	31.6	12.8
MIN	326.9	29.4	10.8
MAX	399.6	33.8	14.7

*** Multiple passes may be used if drawing details call for a larger size fillet weld than noted above in the position welding is being performed**

Type of groove	Fillet weld	Minimum groove angle	(deg.)	N/A
		Minimum root opening	(in.)	N/A
		Maximum root face	(in.)	N/A

PREHEAT TABLE

Applicable standard	
AWS D1.5 Bridge Welding Code	For thickness 1/8 to 3/4(in.): 50(°F). Preheat to 70(°F) if the base metal temperature is below 32(°F). Over 3/4 thru 1-1/2(in.): 70(°F). Over 1-1/2 thru 2-1/2(in.): 150(°F). Over 2-1/2(in.): 225(°F). Refer to AWS D1.5 2010 Table 4.3 (pg 85)
AWS D1.5 2010 FCM	For thickness 1/8 to 3/4(in.): 100°F). Over 3/4 thru 1-1/2(in.): 200(°F). Over 1-1/2 thru 2-1/2(in.): 300(°F). Over 2-1/2(in.): 350(°F). No welding to be done if ambient temperature in immediate area is below 0(°F)
New York SCM	Up to 3/4 ----------100 (F) Over 3/4 to 1-1/2 ----------200 (F) Over 1-1/2 to 2-1/2 --------300 (F) Over 2-1/2 ----------350 (F)

TECHNIQUE

Supplementary MF control	
Peening	Not used
Surface preparation	Grind/Blast/chemical/wirebrush clean to be free of moisture, slag, millscale, oils, dust
Initial/interpass cleaning	Brushing and Grinding
Back gouging method	None

NOTES

AWS FCM preheats are taken from AWS D1.5 2010 Clause 12 Table 12.4 and are based upon calculated heat input calculated in accordance with section 5.12 with an as welded H8 designation for the electrode combination we are using. This higher preheat will be used on non weathering steels also.

Signature 1		Signature 2	
Name	Signature	Name	Signature
Matthew Cote	Matthew J Cote CWI 08051341 QC1 EXP. 5/1/2017		
Date		Date	
6/10/14			

Signature 3		Signature 4	
Name	Signature	Name	Signature
Date		Date	

(c) Copyright 2014 C-spec Software. All rights reserved worldwide.

Casco Bay Steel Structures

One Wallace Ave, South Portland ME 04106

AWS - Prequalified Welding Procedure Specification (pWPS)

WeldOffice WPS

Identification #	480 Rev.
Originated by	Matthew Cote
Date	7/22/2014
Authorized by	Matthew J Cote
Date	7/22/2014

Company name	Casco Bay Steel Structures
Welding process	SMAW
Process type	Manual

Joint design used

Joint type	T - T joint
Joint design	Fillet Weld
Backing	No
Backing material	Not Applicable
Root opening (R)* (in.)	
Root face (f)* (in.)	
Groove angle (a)* (deg.)	
Radius (J - U)* (deg.)	
Back gouging	No
Back gouging method	None

* Datum, As Detailed (As Fit-Up)

Base metals

Spec., type or grade	Gr 50/ Gr50W
Thickness: Groove (in.)	
Fillet (in.)	1/8" and above
Diameter (Pipe) (in.)	

Filler metals

AWS Specification	A5.5
AWS Classification	E-8018 H4R

Shielding

Flux	-
Electrode-flux (class)	-
Gas composition	-
Gas flow rate (cfh)	-
Gas cup size (in.)	-

Position

Welding position: Groove	
Fillet	All
Vertical progression	Up

Electrical characteristics

Transfer mode (GMAW)	N/A
Current type	Other
Other	DC+ and AC

Technique

Stringer or weave bead	Stringer or Weave
Multi/single pass (per side)	Single or Multiple
Number of electrodes	Varies
Spacing: Longitudinal (in.)	-
Lateral (in.)	-
Angle (deg.)	-
Contact tube to work (in.)	-
Peening	Not permitted
Interpass cleaning	Brushing or grinding

Preheat

Preheat temp.: Min. (°F)	See notes
Interpass temp.: Min. (°F)	See notes
Max. (°F)	450

Post weld heat treatment

Temperature (°F)	None
Time (hrs)	-

Welding procedure

Layer	Pass	Process	Filler metal class	Filler metal diameter (in.)	Current type / polarity	Amps	Wire feed speed (in./min)	Volts	Travel speed (in./min)	Joint details
1	All	SMAW	E-8018 H4R	1/8	DCEP	100-160	-	n/a	varies	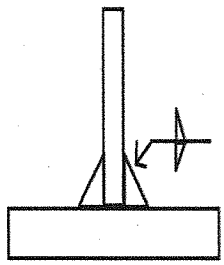
1	All	SMAW	E-8018 H4R	1/8	AC	90-160	-	n/a	varies	
1	All	SMAW	E-8018 H4R	5/32	DCEP	140-210	-	n/a	varies	
1	All	SMAW	E-8018 H4R	5/32	AC	130-210	-	n/a	varies	
1	All	SMAW	E-8018 H4R	3/16	DCEP	200-300	-	n/a	varies	
1	All	SMAW	E-8018 H4R	3/16	AC	180-300	-	n/a	varies	
								Designation		FILLET

Notes

LINCOLN ELECTRIC EXCALIBUR 8018-C3 MR

SEE BACKSIDE FOR MORE DETAILS

Signature 1

Name	Signature
Matthew J Cote	
Date	
7/22/2014	

Matthew J Cote
CWI 08051341
QC1 EXP 5/1/2017

Signature 2

Name	Signature
Date	

Signature 3

Name	Signature
Date	

Signature 4

Name	Signature
Date	

(c) Copyright 2014 C-spec Software. All rights reserved worldwide.

Identification #	480	Rev.

AWS D1.5 2010

Single Pass Fillet weld in 1F position, No bigger than 3/8 in a single pass
Single Pass Fillet weld in 2F, 4F position, No bigger than 5/16 in a single pass
Single Pass Fillet weld in 3F position, No biger than 1/2 in a single pass

For thickness 1/8 to 3/4(in.): 50°F). Preheat to 70(°F) if the base metal temperature is below 32(°F).
Over 3/4 thru 1-1/2(in.): 70(°F).
Over 1-1/2 thru 2-1/2(in.): 150(°F).
Over 2-1/2(in.): 225(°F). Refer to AWS D1.5 2010 Table 4.3 (pg85)

FOR FRACTURE CRITICAL WELDS

For thickness 1/8 to 3/4(in.): 125°F).
Over 3/4 thru 1-1/2(in.): 200(°F).
Over 1-1/2 thru 2-1/2(in.): 300(°F).
Over 2-1/2(in.): 350(°F). No welding to be done if ambient temperature in immediate area is below 0(°F)

ALL VERTICAL WELDING SHALL BE DONE UPWARD

IF A GAP FROM 1/16 TO 3/16 IS EVIDENT, INCREASE WELD SIZE 1/16 FOR EACH 1/16 GAP

EX 1/16 GAP IS +1/16 FROM DETAILED SIZE
1/8 GAP IS +1/8 FROM DETAILED SIZE
3/16 GAP IS +3/16 FROM DETAILED SIZE

Preheats to the NYSSCM

	Gr 50	Gr 50W
to 3/4	50F	100F
over 3/4 to 1-1/2	70F	200F
over 1-1/2 to 2-1/2	150F	300F
over 2-1/2	225	350F

(c) Copyright 2014 C-spec Software. All rights reserved worldwide.

Casco Bay Steel Structures, Inc.

WELDING PROCEDURE SPECIFICATION

Material specification: ASTM Gr. 50 + G-50W
Welding process: Gas Metal ARC Welding (GMAW)
Manual or machine: Semi Auto
Position of welding: Flat + Horizontal
Filler metal specification: AWS-A5.28 ESAB
Filler metal classification: E80C-Ni1
Flux: N A
Shielding gas: 90% AR / 10% CO^2 Flow rate: 35 CFH +8/-4, Elec. Stickout 5/8
Single or multiple pass: Single + multiple
Single or multiple arc: Single
Welding current: DC
Polarity: DCEP
Welding progression: See Detail
Root treatment: Blast Clean-wire Brush-Area To be Free of slag-Rust-Moisture
Preheat and interpass temperature: See Table and as Required
Posfheat temperature: As Required
Heat Input Min 24.4 KJ/in Max 38.3 KJ/in P.Q.R. 418-FCM=34.8 KJ/IN
* 35.0 KJ/in Min for single pass

Minimum Preheat and Interpass Temperature, °C [°F]

Welding Process (Base Metal)	To 20 mm [3/4 in] Incl.	Over 20 mm [3/4 in] to 40 mm [1-1/2 in] Incl.	Over 40 mm [1-1/2 in] to 65 mm [2-1/2 in] Incl	Over 65 mm [2-1/2 in]
		Thickness of Thickest Part at Point of Welding, mm [in]		
SAW; GMAW; FCAW; SMAW (M270M [M270] [A 709M (A 709)] 345 [50].	10 [50]	20 [70]	65 [150]	110 [225]
FCM Gr50	150°F	200°F	225°F	325°F
FCM Gr50W	150°F	250°F	325°F	350°F

Preheats to the NYSSCM

	Gr 50	Gr 50W
to 3/4	50F	100F
over 3/4 to 1-1/2	70F	200F
over 1-1/2 to 2-1/2	150F	300F
over 2-1/2	225	350F

WELDING PROCEDURE

Max Interpass 440°F

Sec. 5.12.4.2

AWS D1.5 Joint detail Fillet

Pass no.	Electrode size	Welding current Amperes	Volts	Travel speed
AS REQ	.052	307	29.2	15.5
		338.7 To 276.3	31 To 27	17.5 To 13.5
* 1 Pass	.052	338.7 to 281.3	31 to 28.0	17.5 to 13.5

2F

To 3/8

To 5/8

To 1/2

1F

This procedure may vary due to fabrication sequence, fit-up, pass size, etc., within the limitation of variables given in applicable A.W.S. codes or contract specifications

Procedure no. FCM 610

Revision no.

Contractor Casco Bay Steel

Authorized By Paul E. Goodale

Date 8-1-2013

Casco Bay Steel Structures

One Wallace Ave, South Portland ME 04106

AWS - Welding Procedure Specification (WPS)

WeldOffice WPS

WPS record number	611	Revision	Qualified to	AWS D1.5
Date	1/19/2015		Company name	Casco Bay Steel Structures
Supporting PQR(s)	418			
Reference docs.				

Scope	Groove
Joint	Joint details for this welding procedure specification in: JOINTS section of this WPS, Production drawings

BASE METALS

Type	Gr50/Gr50W	P-no.	Grp-no. -
Welded to	Gr50/Gr50W	P-no.	Grp-no. -
Backing:		P-no.	Grp-no.
Retainers			
Notes	All A709 steels with 50ksi or less are also qualified		

THICKNESS RANGE QUALIFIED (in.)

	As-welded		With PWHT	
	Min.	Max.	Min.	Max.
Complete pen.	-	-	-	-
Impact tested	-	-	-	-
Partial pen.	-	-	-	-
Fillet welds	-	-	-	-

DIAMETER RANGE QUALIFIED (in.)

As-welded		With PWHT	
Min.	Max.	Min.	Max.
-	-	-	-

FILLER METALS

	SFA	Classification	F-no.	A-no.	Chemical analysis or Trade name	THICKNESS RANGE QUALIFIED (in.) As-welded Min.	As-welded Max.	With PWHT Min.	With PWHT Max.
GMAW	5.28	E80C-Ni1	6	10	ESAB Coreweld 88-HS Ni1	-	-	-	-
Sup. filler	-	-	-	-	-	- None -			

WELDING PROCEDURE

Welding process		GMAW
Type		Semi-automatic
Minimum preheat/interpass temperature	(°F)	See Backpage
Maximum interpass temperature	(°F)	440
Filler metal size	(in.)	.052
Layer number		
Position		F,H
Weld progression		Not applicable
Current/polarity		DCEP
Amperes		307
Volts		29.2
Travel speed	(in./min)	15.5
Maximum heat input	(kJ/in.)	34.8
Wire feed speed	(in./min)	
Arc transfer mode		Spray
Shielding: Gas type		Argon/CO2, 90/10
Flow rate	(cfh)	35
Trailing: Gas type		
Flow rate	(cfh)	
Backing: Gas type		
Flow rate	(cfh)	
String or weave		Stringer or Weave
Orifice/gas cup size		
C.T.W.D	(in.)	5/8
Multi/Single pass per side		Single or Multiple passes
Multi/single electrode		Single electrode
Maximum pass thickness	(in.)	
Weld deposit chemistry		E80C-Ni1-H8
Notes		

(c) Copyright 2015 C-spec Software. All rights reserved worldwide.

Casco Bay Steel Structures

One Wallace Ave, South Portland ME 04106

AWS - Welding Procedure Specification (WPS)

WeldOffice WPS

WPS record number	611	Revision	Qualified to	AWS D1.5
Date	1/19/2015		Company name	Casco Bay Steel Structures

JOINTS: Typical joint(s). See actual production drawings and engineering specifications for details.

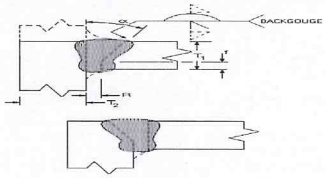

	Amps	Volts	TS
Avg	307	29.2	15.5
Min	276.3	27.0	13.5
Max	338.7	31.0	17.5

TC-U4B-GF

*** The second side shall be backgouged and ground to clean metal prior to welding the second side. Refer to blueprint for specific weld contours, reinforcement and weld size**

Type of groove	Single-bevel-groove	Minimum groove angle	(deg.)	40 min - 55 max
		Minimum root opening	(in.)	0 min to 3/16 max
		Maximum root face	(in.)	not limited

PREHEAT TABLE

Applicable standard	
AWS D1.5 Bridge Welding Code	For thickness 1/8 to 3/4(in.): 50(°F). Preheat to 70(°F) if the base metal temperature is below 32(°F). Over 3/4 thru 1-1/2(in.): 70(°F). Over 1-1/2 thru 2-1/2(in.): 150(°F). Over 2-1/2(in.): 225(°F). Refer to AWS D1.5 2010 Table 4.3 (pg 85)
AWS D1.5 2010 FCM	For thickness 1/8 to 3/4(in.): 150°F). Over 3/4 thru 1-1/2(in.): 250(°F). Over 1-1/2 thru 2-1/2(in.): 325(°F). Over 2-1/2(in.): 350(°F). No welding to be done if ambient temperature in immediate area is below 0(°F
New York SCM	Up to 3/4 ----------100 (F) Over 3/4 to 1-1/2 ----------200 (F) Over 1-1/2 to 2-1/2 --------300 (F) Over 2-1/2 ----------350 (F)

TECHNIQUE

Peening	Not used
Surface preparation	Grind/Blast/chemical/wirebrush clean to be free of moisture, slag, millscale, oils, dust
Initial/interpass cleaning	Brushing and Grinding
Back gouging method	Grinding or Air Carbon Arc Gouging

NOTES

AWS FCM preheats are taken from AWS D1.5 2010 Clause 12 Table 12.4 and are based upon calculated heat input calculated in accordance with section 5.12 with an as welded H8 designation for the electrode combination we are using. This higher preheat will be used on non weathering steels also.

Signature 1

Name	Signature
Matthew Cote	Matthew Cote
Date	
1/19/2015	

Matthew J Cote
CWI 08051341
QC1 EXP. 5/1/2017

Signature 2

Name	Signature
Date	

Signature 3

Name	Signature
Date	

Signature 4

Name	Signature
Date	

(c) Copyright 2015 C-spec Software. All rights reserved worldwide.

Casco Bay Steel Structures

One Wallace Ave, South Portland ME 04106

AWS - Welding Procedure Specification (WPS)

WeldOffice WPS

WPS record number Date	653 10/5/2015	Revision	Qualified to Company name	AWS D1.5 Casco Bay Steel Structures
Supporting PQR(s) Reference docs.	613 FCM			

Scope	Groove
Joint	Joint details for this welding procedure specification in: JOINTS section of this WPS

BASE METALS

Type	Gr 50	P-no.	Grp-no. -
Welded to	Gr 50	P-no.	Grp-no. -
Backing:	as rqd	P-no.	Grp-no. -
Retainers Notes			

THICKNESS RANGE QUALIFIED (in.)

	As-welded Min.	As-welded Max.	With PWHT Min.	With PWHT Max.
Complete pen.	-	-	-	-
Impact tested	-	-	-	-
Partial pen.	-	-	-	-
Fillet welds	-	-	-	-

DIAMETER RANGE QUALIFIED (in.)

	As-welded Min.	As-welded Max.	With PWHT Min.	With PWHT Max.
	-	-	-	-

FILLER METALS

	SFA	Classification	F-no.	A-no.	Chemical analysis or Trade name	THICKNESS RANGE QUALIFIED (in.) As-welded Min.	As-welded Max.	With PWHT Min.	With PWHT Max.
GMAW	5.36	E70C-6MH4	6		ESAB Core Weld C6	-	-	-	-
Sup. filler	-	-	-	-	-	- None -			

WELDING PROCEDURE

Welding process		GMAW
Type		Automatic / Semi-Automatic
Minimum preheat/interpass temperature	(°F)	SEE BACKPAGE
Maximum interpass temperature	(°F)	390 F
Filler metal size	(in.)	.052
Layer number		
Position		F,H
Weld progression		Not applicable
Current/polarity		DCEP (reverse polarity)
Amperes		296
Volts		29.1
Travel speed	(in./min)	13.1
Maximum heat input	(kJ/in.)	39.5
Wire feed speed	(in./min)	
Arc transfer mode		Spray
Shielding: Gas type		Argon/CO2, 90/10
Flow rate	(cfh)	35
Trailing: Gas type		
Flow rate	(cfh)	
Backing: Gas type		
Flow rate	(cfh)	
String or weave		Stringer or Weave
Orifice/gas cup size		
C.T.W.D	(in.)	5/8
Multi/Single pass per side		Single or Multiple passes
Multi/single electrode		Single electrode
Maximum pass thickness	(in.)	
Weld deposit chemistry		E70C-6MH4
Notes		

(c) Copyright 2015 C-spec Software. All rights reserved worldwide.

Casco Bay Steel Structures

One Wallace Ave, South Portland ME 04106

AWS - Welding Procedure Specification (WPS)

WeldOffice WPS

WPS record number	653	Revision	Qualified to	AWS D1.5
Date	10/5/2015		Company name	Casco Bay Steel Structures

JOINTS: Typical joint(s). See actual production drawings and engineering specifications for details.

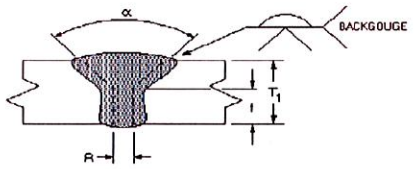

PARAMETERS

	A	V	TS
rqd	296	29.1	13.1
max	325.6	31.1	15.1
min	266.4	27.1	11.1

B-U2-GF

Type of groove	Single-V-groove	Minimum groove angle	(deg.)	40
		Minimum root opening	(in.)	0
		Maximum root face	(in.)	3/16

PREHEAT TABLE

Applicable standard	
AWS D1.5 Bridge Welding Code	For thickness 1/8 to 3/4(in.): 50(°F). Preheat to 70(°F) if the base metal temperature is below 32(°F). Over 3/4 thru 1-1/2(in.): 70(°F). Over 1-1/2 thru 2-1/2(in.): 150(°F). Over 2-1/2(in.): 225(°F). Refer to AWS D1.5 2010 Table 4.3 (pg 85)

TECHNIQUE

Peening	Not used
Surface preparation	Grind/Blast/chemical/wirebrush clean to be free of moisture, slag, millscale, oils, dust
Initial/interpass cleaning	Brushing and Grinding
Back gouging method	Grinding or Air Carbon Arc Gouging

NOTES

Signature 1

Name	Signature
Matthew J Cote	
Date	
10/5/15	

Matthew J Cote
CWI 08051341
QC1 EXP 5/1/2017

Signature 2

Name	Signature
Date	

Signature 3

Name	Signature
Date	

Signature 4

Name	Signature
Date	

(c) Copyright 2015 C-spec Software. All rights reserved worldwide.

Casco Bay Steel Structures

One Wallace Ave, South Portland ME 04106

AWS - Welding Procedure Specification (WPS)

WeldOffice WPS

WPS record number Date	664 5/06/2016	Revision	Qualified to Company name	AWS D1.5 Casco Bay Steel Structures
Supporting PQR(s) Reference docs.	613 FCM			

Scope	Groove
Joint	Joint details for this welding procedure specification in: JOINTS section of this WPS

BASE METALS

Type	Gr 50	P-no.	Grp-no. -
Welded to	Gr 50	P-no.	Grp-no. -
Backing:	None	P-no.	Grp-no. -
Retainers Notes			

THICKNESS RANGE QUALIFIED (in.)

	As-welded		With PWHT	
	Min.	Max.	Min.	Max.
Complete pen.	-	-	-	-
Impact tested	-	-	-	-
Partial pen.	-	-	-	-
Fillet welds	-	-	-	-

DIAMETER RANGE QUALIFIED (in.)

As-welded		With PWHT	
Min.	Max.	Min.	Max.
-	-	-	-

FILLER METALS

	SFA	Classification	F-no.	A-no.	Chemical analysis or Trade name	THICKNESS RANGE QUALIFIED (in.) As-welded Min.	As-welded Max.	With PWHT Min.	With PWHT Max.
GMAW	5.36	E70C-6MH4	6		ESAB Core Weld C6	-	-	-	-
Sup. filler	-	-	-	-	-	- None -			

WELDING PROCEDURE

Welding process		GMAW
Type		Semi-automatic
Minimum preheat/interpass temperature	(°F)	SEE BACKPAGE
Maximum interpass temperature	(°F)	390 F
Filler metal size	(in.)	.052
Layer number		
Position		F,H
Weld progression		Not applicable
Current/polarity		DCEP (reverse polarity)
Amperes		296
Volts		29.1
Travel speed	(in./min)	13.1
Maximum heat input	(kJ/in.)	39.5
Wire feed speed	(in./min)	
Arc transfer mode		Spray
Shielding: Gas type		Argon/CO2, 90/10
Flow rate	(cfh)	35
Trailing: Gas type		
Flow rate	(cfh)	
Backing: Gas type		
Flow rate	(cfh)	
String or weave		Stringer or Weave
Orifice/gas cup size		
C.T.W.D	(in.)	5/8
Multi/Single pass per side		Single or Multiple passes
Multi/single electrode		Single electrode
Maximum pass thickness	(in.)	
Weld deposit chemistry		E70C-6MH4
Notes		

(c) Copyright 2016 C-spec Software. All rights reserved worldwide.

Casco Bay Steel Structures

One Wallace Ave, South Portland ME 04106

AWS - Welding Procedure Specification (WPS)

WeldOffice WPS

WPS record number	664	Revision	Qualified to	AWS D1.5
Date	5/06/2016		Company name	Casco Bay Steel Structures

JOINTS: Typical joint(s). See actual production drawings and engineering specifications for details.

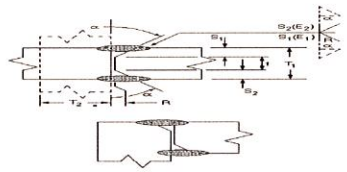

PARAMETERS

	A	V	TS
rqd	296	29.1	13.1
max	325.6	31.1	15.1
min	266.4	27.1	11.1

TC-P6-GF

Fillet weld may be placed on second side as required by plans

Type of groove	Single-U-groove PJP	Minimum groove angle	(deg.)	15
		Minimum root opening	(in.)	0
		Maximum root face	(in.)	n/a

PREHEAT TABLE

Applicable standard	
AWS D1.5 Bridge Welding Code	For thickness 1/8 to 3/4(in.): 50(°F). Preheat to 70(°F) if the base metal temperature is below 32(°F). Over 3/4 thru 1-1/2(in.): 70(°F). Over 1-1/2 thru 2-1/2(in.): 150(°F). Over 2-1/2(in.): 225(°F). Refer to AWS D1.5 2010 Table 4.3 (pg 85)

TECHNIQUE

Peening	Not used
Surface preparation	Grind/Blast/chemical/wirebrush clean to be free of moisture, slag, millscale, oils, dust
Initial/interpass cleaning	Brushing and Grinding
Back gouging method	Grinding or Air Carbon Arc Gouging

NOTES

Signature 1

Name	Signature
Matthew Cote	
Date	
5/9/16	

Signature 2

Name	Signature
Date	

Matthew J Cote
CWI 08051341
QC1 EXP. 5/1/2017

Signature 3

Name	Signature
Date	

Signature 4

Name	Signature
Date	

(c) Copyright 2016 C-spec Software. All rights reserved worldwide.

Casco Bay Steel Structures
One Wallace Ave
South Portland, ME 04106

Phone
(207) 780-6722

Fax
(207) 780-6726

Procedure Qualification Record
AWS D1.5-10 Section 5.12

PQR # 613 FCM

Fabricator Casco Bay Steel Structures, Inc. Test Date June 3, 2013
Process GMAW Filler Metal AWS - A 18 (E70C-6MH4)
Position Flat 1GU Welder Russel Hughes
Electrode(s) Mfg. Designation ~~ESAB - E70C-6MH4)~~
Flux Mfg. Designation NA
Electrode Extension 5/8

	Diam.	Current	WFS*	Voltage	Current & Polarity
Electrode (1)	052	296	NA	29.1	DCEP
(2)					
(3)					

Calculated Heat Input 39.5 KJ/in (See 5.)
Shielding Gas 90%Ar/10%C02 Flow Rate 35CFH
Dew Point NA Travel Speed 13.1
Base Metal Specification & Thickness 1in GR 50WT2 - Backing 1/2in GR 50T2
(Attach Certified Copy of Mill Test Report)
Preheat Temp 150F Interpass Temp. Min 150F Max 390F

SPECIMEN	TEST RESULTS
All Weld Metal Tension (AWMT)	Tensile Strength(psi) 96,500
three- Macro Examination- No Defects	Yield Strength 87,000
	Elognation in 2 in (%) 26.5
	Reduction in area (%) 63.5

Side Bends 1. accepted 2. accepted 3. accepted 4. accepted
Reduced Section Tension Tensile Strength 1. 87,310 Location of Break 1. BM
2. 86,290 2. BM
Charpy V-Notch Impact (44, 39, 38, 44, 49)
Toughness of Weld Metal Avg. Ft. lb.** 42.3 @ 20F F
SMAW, SAW, FCAW, GMAW-(___, ___, ___, ___, ___)
5 Reg. Avg. Ft. lb.** ___ @ ___ F
ESW & EGW-8 Reg **Discard the highest & lowest values and average the remaining values
Chemistry of Deposited Weld Metal C NA Mn NA Si NA P NA S NA
When required by Contract Documents Ni NA Cr NA Mo NA V NA Cu NA
Remarks: Visual Accepted Radiographic Test See RT Report
*Wire feed may be used in lieu of current when a correlation curve is provided for the same electrode diameter and same electrode extension

CWI # 97100811

Test Witness: Bruce Hauschel Agency Pannoni (Mass. DOT)
Results Reviewed: ___ State Acceptance: ___

Bruce H Hauschel
CWI 97100811
QC1 EXP. 10/1/2015

Casco Bay Steel Structures, Inc.

75 Spring Hill Road
Saco, Maine 04072

Phone: (207) 282-7360

Fax: (207) 282-1179

PROCEDURE QUALIFICATION RECORD

P.Q.R. NO. 613

FILLET WELD SOUNDNESS TEST

TEST RESULTS

Minimum Size Pass Macroetch	Maximum Size Pass Macroetch
1. Passed	1. Passed
2. Passed	2. Passed
3. Passed	3. Passed

Welder's Name Russell Hughes

Test Witnessed By: Paul E. Goodale
Q.C. Manager - CBSS

We , the undersigned, certify that the statements in this record are correct and that the welds were prepared and tested in accordance with the requirements of AASHTO/AWS D1.5 (2010) Year Bridge Weld Code.

Manufacturer or contractor Casco Bay Steel
Authorized by Paul E. Goodale
Date June 26 - 2013

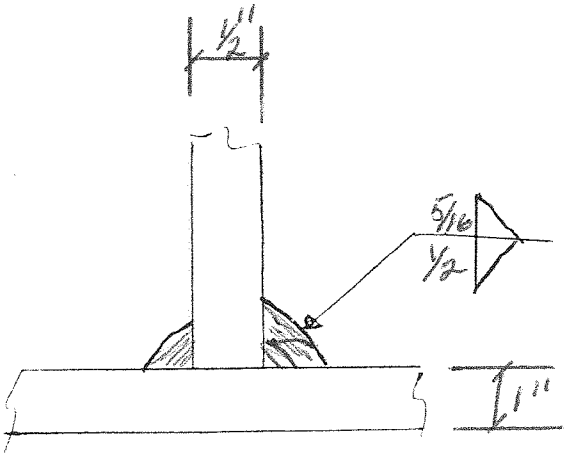

Parameters 296 Amps
29.1 Volts
13.1 IPM

CERTIFICATE OF ANALYSIS

ESAB

CERTIFICATE OF TYPICAL ANALYSIS

ORDER # : 000000
PART NUMBER : 243411162

END USER: THE ESAB GROUP
DIAMETER & LENGTH: .052
TRADE NAME: COREWELD
TYPE : C6
LOT NO: 97789
CLASSIFICATION : E70C-6MH4
This material conforms to:
AWS A 5.18,ASME SFA 5.18

CHEMICAL ANALYSIS :

	PROPERTIES	SPEC. REQUIREMENTS
Carbon	0.059	(.12 Max)
Manganese	1.52	(1.75 Max)
Silicon	0.74	(.90 Max)
Phosphorus	0.007	(.03 Max)
Sulphur	0.016	(.03 Max)
Chromium	0.05	(.20 Max)*
Nickel	0.02	(.50 Max)*
Molybdenum	0.01	(.30 Max)*
Vanadium	0.004	(.08 Max)*
Copper	0.053	(.50 Max.)

(*) The sum of these elements shall not exceed .50%

RADIOGRAPHY :
XRAY Satisfactory

WELDING REQUIREMENTS:
SHIELDING GAS USED: 75%AR/25%CO2

TENSILE REQUIREMENTS:
AS WELDED
MIN YIELD(psi) : 58,000
MIN YIELD(MPa) : 400
MIN TENSILE(psi) : 70,000
MIN TENSILE(MPa) : 480 MAX TENSILE(MPa) :
MIN ELONG : 22

TENSILE RESULTS :

	AS WELDED
CALCULATE YIELD(psi) :	73,500
CALCULATE YIELD(Mpa) :	507
CALCULATE TENSILE(psi) :	86,200
CALCULATE TENSILE(Mpa) :	594
% ELONGATION :	27
% REDUCTION OF AREA :	64.4

The ESAB Group, Inc.
1500 Karen Lane
Hanover, Pa 17331
www.esab.com
Fax: 1-800-444-8911
Phone: 1-800-ESAB-123

By: K. Wildasin
K. Wildasin, Supervisor, Q.A. Services

CERTIFICATE OF ANALYSIS

ESAB

ORDER # : 000000

CHARPY V-NOTCH REQUIREMENTS:

AS-WELDED :

CVN TEMPERATURE (F) :	-20
CVN TEMPERATURE (C) :	-29
CVN AW MIN (FT-LBS) :	20
CVN AW MIN (JOULES) :	27

CHARPY V-NOTCH RESULTS:

STRESS-RELIEVED :

TEMP(F)	FT-LBS	TEMP(C)	JOULES	GAS
0	55	-18	75	
-20	38	-29	52	

This material is certified to be free of any mercury.
The undersigned certifies that the product supplied will meet the requirements of the applicable AWS Filler Metal Specification when tested in accordance with that specification.

MADE IN USA

COUNTRY OF ORIGIN: USA

The ESAB Group, Inc.
1500 Karen Lane
Hanover, Pa 17331
www.esab.com
Fax: 1-800-444-8911
Phone: 1-800-ESAB-123

By: K. Wildasin
K. Wildasin, Supervisor, Q.A. Services

Casco Bay Steel Structures, Inc.

75 Spring Hill Road
Saco, Maine 04072

Phone: (207) 282-7360 **Fax:** (207) 282-1179

PROCEDURE QUALIFICATION RECORD

GMAW PQR # 613

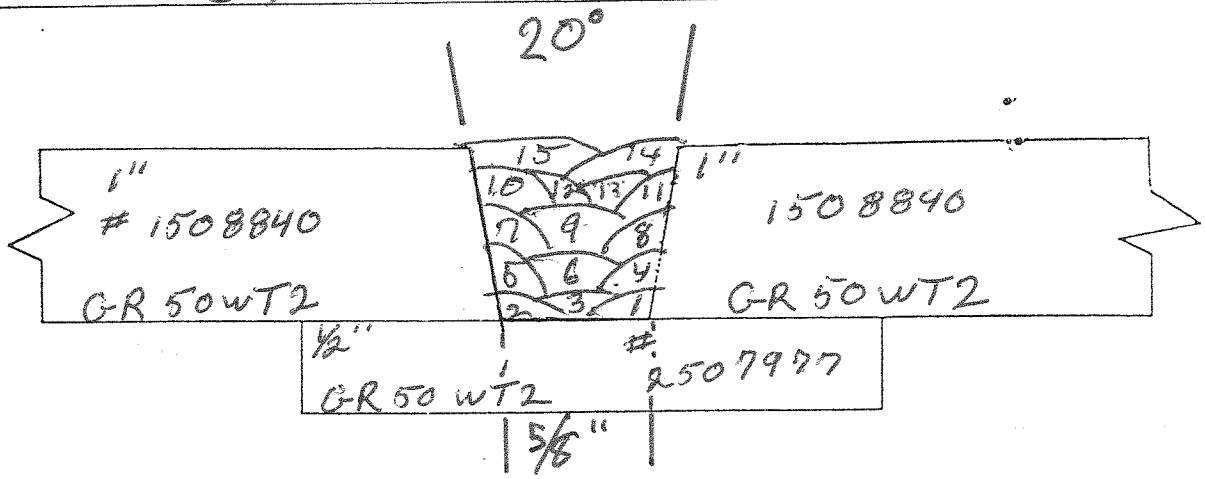

Preheat Temp 150°F Interpass Temp. Min 150°F Max 390°F

PASS #	LENGTH	TIME	VOLTS	AMPS	TRAVEL	
1	25"	~4	29.3	282	17.6	150°F min
2			29.1	282	17.7	200
3			29.2	290	17	250
4			29.3	285	12	300
5			29.2	278	10.9	320
6			29.1	293	14	300
7			28.9	295	14.7	310
8			29.2	293	12	330
9			29.1	310	11.5	350
10			29	305	11.5	350
11			29	305	11	370
12			29.1	280	12.5	365
13			29	315	13	365
14			29.4	305	11.9	360
15	25"	~4	29.1	320	9.5	390 High.
16						
17						
18						
19						
20						
21						
22						
23						
24						
AVERAGE			29.1	296	13.1	

HI = 39.5 KJ/in

SIGNATURE: Jason Trask

Paul E. Goodale

Applus RTD USA • 80 Pleasant Avenue • South Portland • Maine • 04106 • USA
Phone: 207-799-8911 • Fax: 207-7997251

INSPECTION REPORT

CUSTOMER'S NAME: Casco Bay Steel Structures | P.O. NO.: 2474 | PAGE 1 OF 1

RADIOGRAPHY REPORT NO.: RTD-13-0793 | PROCEDURE NO.: AWS D1.1 | QUANTITY: 1

PART NO.: 1" Test Plate // Gmaw - 1G - FCM | JOB NO.: PQR # 613// Russ Hughes

SOURCE: TYPE Iridium 192 SIZE: .129 | CURIES: 65.8 KV: N/A MA: N/A SFD: 20"

FILM: TYPE II SPEED: AA-400 | SINGLE ☐ DOUBLE ☑ SIZE: 7 x 17 SCREENS: 0.005" | FRONT ☑ BACK ☑ FILM SIDE ☐ SOURCE SIDE ☑

IQI: SIZE 20 Pene. GROUP: 1 | SENSITIVITY: 2-4T SHIM: N/A

MATERIAL: TYPE CS/SS THICKNESS: 1" | ACCEPTANCE STANDARD: AWS D1.5

RADIOGRAPHIC SET-UP

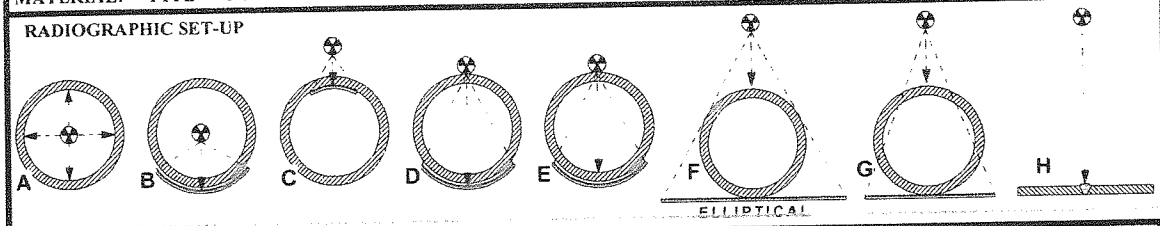

OTHER

SERIAL NUMBER	VIEW NUMBER	CONDITION OF PART (See Definitions)	ACCEPT	REJECT	SERIAL NUMBER	VIEW NUMBER	CONDITION OF PART (See Definitions)	ACCEPT	REJECT
PQR # 613	A-B	9	✓						
	B-C	9	✓						

REMARKS

DEFINITIONS:
1. Crack
2. Porosity
3. Incomplete Fusion
4. Incomplete penetration
5. Slag
6. Inclusions
7. Gas Holes
8. Shrink
9. No Apparent Defects
10. Film Artifacts
11. Hi/Lo
12. Surface
13. Undercut
14. Void
15. Internal concavity

SIGNATURE: R. Lemay #2833757

DATE: M / D / Y 06/06/2013 LEVEL: II

(FORM XXXX REV 0)

NUCOR
PLATE MILL

P.O.Box 279
Winton, NC 27986
(252) 356-3700

Mill Test Report

NUCOR It's our Nature

Issuing Date : 12/01/2012 B/L No. : 342359 Load No. : 344430 Our Order No. : 105913/6 Cust. Order No. : NE-60510

Vehicle No: PTTX 137275

Specification : 0.5000" x 96.000" x 480.000" / 12.7mm x 2438.4mm x 12192.0mm
AASHTO M270 GR50W/345W T2&T1/ASTM A709-11 GR50W/345W
T2&T1/ASTM A588-10 Grade B

Sold To : INFRA-METALS
8 PENT HIGHWAY
WALLINGFORD,CT 06492

Ship To : INFRA METALS C/O CASCO BAY STEEL
ST DELIVERY
FAX TOM DELANEY 203-294-2993
BIDDEFORD-SACHO,ME 04005

Marking : PM PARTS

Heat No	C	Mn	P	S	Si	Cu	Ni	Cr	Mo	Al(tot)	V	Nb	Ti	N	Ca	B	Sn	CEQ	PCM
2507977	0.17	1.05	0.010	0.001	0.34	0.30	0.22	0.48	0.02	0.030	0.033	0.002	0.002				0.012	0.48	0.28

Tensile Test

Plate Serial No	Pieces	Tons	Dir.	(psi) Yield	(psi) Tensile	Elongation % in 2"	Elongation % in 8"
2507977-03	6	19.60	T	60,900	86,800		18.1
			T	62,300	86,800		17.9

Charpy Impacts

Dir.	(ft-lbs) 1	(%) shear	(ft-lbs) 2	(%) shear	(ft-lbs) 3	(%) shear	(ft-lbs) Ave.	(%) shear	Size	Temp (°F)	Min Ave.
H-L	101.9		111.6		85.0		99.5		10mm	40	15
H-L	69.8		61.4		78.7		70.0		7.5mm	40	15

Metric Results

Tensile Test

Plate Serial No	Pieces	Tons	Dir.	(MPa) Yield	(MPa) Tensile	Elongation % in 2"	Elongation % in 8"
2507977-03	6	17.78	T	420	598		18.1
			T	430	598		17.9

Charpy Impacts

Dir.	(J) 1	(%) shear	(J) 2	(%) shear	(J) 3	(%) shear	(J) Ave.	(%) shear	Size	Temp (°C)	Min Ave.
H-L	138.2		151.3		115.2		134.9		10mm	4	20
H-L	94.6		83.3		106.7		94.9		7.5mm	4	20

.17 + .23 + .10 + .03 = 53% CE

NFCM, T1 and T2, 15ft-lbs @ +40 F (20J @ +4 C), H frequency. Temperature reduced by 15 F for each 10 ksi over 65 ksi ;

Manufactured to fully killed fine grain practice by Electric Arc Furnace. Welding or weld repair was not performed on this material. Mercury has not been used in the direct manufacturing of this material. Produced as continuous cast discrete plate as-rolled, unless otherwise noted in Specification.
Yield by 0.5EUL method unless otherwise specified. Ceq = C+(Mn/6)+((Cr+Mo+V)/5)+((Cu+Ni)/15)
Pcm = C+(Si/30)+(Mn/20)+(Cu/20)+(Ni/60)+(Cr/20)+(Mo/15)+(V/10)+5B
Melted and manufactured in the USA. ISO 9001:2008 certified (#008063) by SRI Quality System Registrar (#0985-09). PED 97/23/EC 7/2 Annex 1, Para. 4.3 Compliant.
DIN 50049 3.1.B/EN 10204 3.1B(2004), DIN EN 10204 3.1(2005) compliant. For ABS grades only, Quality Assurance certificate 09-MMPQA-546

We hereby certify that the contents of this report are accurate and correct. All test results and operations performed by the material manufacturer are in compliance with the applicable specifications, including customer specifications.

T. A. Depretis

T. A. Depretis, Metallurgist

12/04/2012 8 08 18 AM

NUCOR
PLATE MILL

P.O.Box 279
Winton, NC 27986
(252) 356-3700

Mill Test Report

Page 1

NUCOR It's our Nature!

Issuing Date : 12/20/2011 B/L No. : 313126 Load No. : 314995 Our Order No. : 97007/1 Cust. Order No. : NE-44895

Vehicle No: PTTX 136305

Specification : 1.0000" x 78.000" x 978.000" / 25.4mm x 1981.2mm x 24841.2mm
AASHTO M270 GR50W/345W T2&T1/ASTM A709-11 GR50W/345W T2&T1/ASTM A588-10 Grade B

Sold To : INFRA-METALS
8 PENT HIGHWAY
WALLINGFORD,CT 06492

Ship To : INFRA METALS C/O CASCO BAY STEEL
ST DELIVERY
FAX TOM DELANEY 203-294-2993
BIDDEFORD-SACHO,ME 04005

Marking :

Heat No	C	Mn	P	S	Si	Cu	Ni	Cr	Mo	Al(tot)	V	Nb	Ti	N	Ca	B	Sn	CEQ	PCM
1508840	0.17	1.02	0.011	0.001	0.30	0.30	0.22	0.46	0.02	0.028	0.026	0.002	0.002		0.0041	0.0002	0.013	0.48	0.28

Tensile Test

Plate Serial No	Pieces	Tons	Dir.	(psi) Yield	(psi) Tensile	Elongation % in 2"	Elongation % in 8"
1508840-01	1	10.81	T	57,200	81,900		17.9
			T	50,100	80,900		23.4
1508840-03	3	32.45	T	57,200	81,900		17.9
			T	50,100	80,900		23.4

Charpy Impacts

Dir.	(ft-lbs) 1	(%) shear	(ft-lbs) 2	(%) shear	(ft-lbs) 3	(%) shear	(ft-lbs) Ave.	(%) shear	Size	Temp (°F)	Min Ave.
H-L	143.9		230.6		141.9		172.1		10mm	10	15
H-L	140.3		119.2		207.1		155.5		10mm	10	15
H-L	143.9		230.6		141.9		172.1		10mm	10	15
H-L	140.3		119.2		207.1		155.5		10mm	10	15

Metric Results

Tensile Test

Plate Serial No	Pieces	Tons	Dir.	(MPa) Yield	(MPa) Tensile	Elongation % in 2"	Elongation % in 8"
1508840-01	1	9.81	T	394	565		17.9
			T	345	558		23.4
1508840-03	3	29.43	T	394	565		17.9
			T	345	558		23.4

Charpy Impacts

Dir.	(J) 1	(%) shear	(J) 2	(%) shear	(J) 3	(%) shear	(J) Ave.	(%) shear	Size	Temp (°C)	Min Ave.
H-L	195.1		312.6		192.4		233.4		10mm	-12	20
H-L	190.3		161.7		280.8		210.9		10mm	-12	20
H-L	195.1		312.6		192.4		233.4		10mm	-12	20
H-L	190.3		161.7		280.8		210.9		10mm	-12	20

.17 + .22 + .1012 + .0346 = .5258 = 53% CE

NFCM, T1 and T2, 15ft-lbs @ +40 F (20J @ +4 C), H frequency. Temperature reduced by 15 F for each 10 ksi over 65 ksi ;

Manufactured to fully killed fine grain practice by Electric Arc Furnace. Welding or weld repair was not performed on this material. Mercury has not been used in the direct manufacturing of this material. Produced as continuous cast discrete plate as-rolled, unless otherwise noted in Specification.
Yield by 0.5EUL method unless otherwise specified. Ceq = C+(Mn/6)+((Cr+Mo+V)/5)+((Cu+Ni)/15)
Pcm = C+(Si/30)+(Mn/20)+(Cu/20)+(Ni/60)+(Cr/20)+(Mo/15)+(V/10)+5B
Melted and manufactured in the USA. ISO 9001:2008 certified (#008063) by SRI Quality System Registrar (#0985-09). PED 97/23/EC 7/2 Annex 1, Para. 4.3 Compliant.
DIN 50049 3.1.B/EN 10204 3.1B(2004), DIN EN 10204 3.1(2005) compliant. For ABS grades only, Quality Assurance certificate 09-MMPQA-546

We hereby certify that the contents of this report are accurate and correct. All test results and operations performed by the material manufacturer are in compliance with the applicable specifications, including customer specifications.

T. A. Depretis

T. A. Depretis, Metallurgist

12/23/2011 8:46:57 AM

MISTRAS Asset Protection Solutions | Services Division

P: (508) 832-5500 • F: (508) 832-5557
2 Millbury Street • Auburn, MA 01501
www.mistrasgroup.com

To: Casco Bay Steel
75 Spring Hill Rd
Saco, ME 04072

Date: 6-27-13

Job No: 501209

Lab No: Auburn

Order No: 2475

Material: 1.00" THICK ASTM-A-709 GR.50W

P.Q.R. # 613 FCM

Attn:

Specifications:
AWS D1.5

Charpy Impact test

Charpy specimens, 10 mm x 10 mm were tested at -20^0 F on the 240 ft lb. scale. Velocity of the Head at the time of impact was 17 ft per second.

Sample	Notch location	Notch type	Impact Values	
1	WELD	Vee	44	Ft. Lb.
2	WELD	Vee	39	Ft. Lb.
3	WELD	Vee	38	Ft. Lb.
4	WELD	Vee	44	Ft. Lb.
5	WELD	Vee	49	Ft. Lb.

In witness whereof, I have hereunto set my hand this
27TH Day of June, 2013
Conam Inspection

Lynn Anderson, Mech. Test Technician

MISTRAS Asset Protection Solutions | Services Division

P: (508) 832-5500 • F: (508) 832-5557
2 Millbury Street • Auburn, MA 01501
www.mistrasgroup.com

To: CASCO BAY STEEL
75 SPRING HILL RD.
SACO ME. 04072

Attn:

Date: 6-27-13

Job No: 501209

Lab No: Auburn

Order No: 2475

Material:1.00" THICK
ASTM-A-709 GR. 50W

P.Q.R. No: 613 FCM

Specifications:
AWS D1.5

Welding Procedure Qualification

SIDE BEND – NO DEFECTS SIDE BEND – NO DEFECTS
SIDE BEND – NO DEFECTS SIDE BEND – NO DEFECTS

Mark	Yield .2% Offset Pounds/s Sq. in.	Ultimate Strength Pounds/s Sq. in.	Elongation in 2"	Elongation %	% Reduction In Area	
T-1	N/R	87,310		N/R	N/R	BM
T-2	N/R	86,290		N/R	N/R	BM
AWT	87,000	96,500		26.5	63.5	

3 – MACRO EXAMINATIONS- NO DEFECTS

WELDER: RUSSELL HUGHES
PROCESS: GMAW
POSITION: FLAT 1GU
ELECTRODE: E70C-6MH4

In witness whereof, I have hereunto set my hand this
27TH Day of June, 2013
MISTRAS SERVICES

Lynn Anderson, Mech. Test Technician

Casco Bay Steel Structures, Inc.

WELDING PROCEDURE SPECIFICATION

Material specification ASTM - Gr. 50
Welding process Gas Metal Arc Welding (GMAW)
Manual or machine Semi - AUTO
Position of welding Flat + Horizontal
Filler metal specification AWS - A-5.18
Filler metal classification E70C - 6MH4 ESAB
Flux NA
Shielding gas 90% AR / 10% CO^2 Flow rate 35 CFH +8/-4, Elec. Stickout 3/8
Single or multiple pass Single or Multiple
Single or multiple arc Single
Welding current DC
Polarity DCEP
Welding progression See Detail
Root treatment Wire brush - blast Clean - area Tobe Free of Slag - Rust - Moisture
Preheat and interpass temperature See Table and as Required
Postheat temperature AS REQ.
Heat Input Min 22.7 KJ/in Max 43.5 KJ/in PQR. # 613FCM - 39.5 KJ/in
* 35 KJ/in Minimum for single Pass Fillet

Minimum Preheat and Interpass Temperature, °C [°F]

Welding Process (Base Metal)	Thickness of Thickest Part at Point of Welding, mm [in]: To 20 mm [3/4 in] Incl.	Over 20 mm [3/4 in] to 40 mm [1-1/2 in] Incl.	Over 40 mm [1-1/2 in] to 65 mm [2-1/2 in] Incl.	Over 65 mm [2-1/2 in]
SAW; GMAW; FCAW; SMAW (M270M [M270] [A 709M (A 709)] Gr. 250 [36], 345 [50], 345W	10 [50]	20 [70]	65 [150]	110 [225]
FCM Gr 50	40 (125)	80 (160)	100 (200)	140 (300)
FCM Gr 50W	40 (125)	100 (200)	140 (300)	180 (350)

WELDING PROCEDURE

MAX Inter pass - 390°F

Pass no.	Electrode size	Welding current: Amperes	Welding current: Volts	Travel speed	Sec. 5.12.4.2 AWS D1-5 Joint detail Fillet
AS REQ	.052	296 325.6 To 266.4	29.1 31.1 To 27.1	13.1 15.1 To 11.1	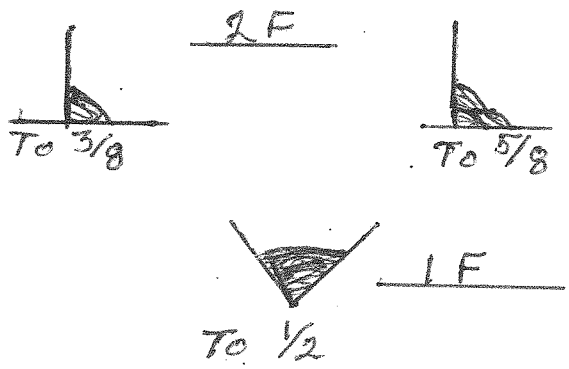

This procedure may vary due to fabrication sequence, fit-up, pass size, etc., within the limitation of variables given in applicable A.W.S. codes or contract specifications

Procedure no. FCM- 603
Revision no.

Contractor Casco Bay Steel
Authorized By Paul E. Hoodlo
Date 7-2-2013

Casco Bay Steel Structures
One Wallace Ave
South Portland, ME 04106

Phone
(207) 780-6722

Fax
(207) 780-6726

Procedure Qualification Record
AWS D1.5-10 Section 5.12 PQR # 418 -FCM

Fabricator Casco Bay Steel Structures, Inc. Test Date April 18,2013
Process GMAW Filler Metal AWS-A 5. 28 (88-HS-NiL)
Position Flat - 1GU Welder Martin Emmons
Electrode(s) Mfg. Designation ESAB - E80C Nil
Flux Mfg. Designation NA
Electrode Extension 1/2in

	Diam.	Current	WFS*	Voltage	Current & Polarity
Electrode (1)	.052	307	NA	29.2	DCEP
(2)					
(3)					

Calculated Heat Input 34.8 KJ/IN (See 5.)
Shielding Gas 90% Ar / 10%CO2 Flow Rate 35CFH
Dew Point NA Travel Speed 15.5
Base Metal Specification & Thickness 1in GR 50WT2 - Backing 1/2in GR 50WT2
(Attach Certified Copy of Mill Test Report)

Preheat Temp 70Degree F Interpass Temp. Min 70Degree F Max 440Degree F

SPECIMEN

All Weld Metal Tension (AWMT)
Three Mac Ro Examination - No Defects

TEST RESULTS
Tensile Strength(psi) 89,000
Yield Strength 79,000
Elognation in 2 in (%) 27.5%
Reduction in area (%) 58.5%

Side Bends 1. No Defects 2. No Defects 3. No Defects 4. No Defects
Reduced Section Tension Tensile Strength 1. 87,760 Location of Break 1. BM
2. 87,110 2. BM
Charpy V-Notch impact (44 , 48 , 55 , 55 , 49)
Toughness of Weld Metal Avg. Ft. lb.** 50.6 @ -20 degree F
SMAW, SAW, FCAW, GMAW-(, , , ,)
5 Reg. Avg. Ft. lb.** @ F
ESW & EGW-8 Reg **Discard the highest & lowest values and average the remaining values

Chemistry of Deposited Weld Metal C .07 Mn 1.46 Si .73 P .011 S .014
When required by Contract Documents Ni 1.0 Cr NA Mo <0.01 V .01 Cu .08
Remarks: Visual Passed Radiographic Test Passed - See report
*Wire feed may be used in lieu of current when a correlation curve is provided for the same electrode diameter and same electrode extension

CWI # 97100811

Test Witness: Bruce Hauschel Agency Pannoni (Mass. DOT)
Results Reviewed: State Acceptance:

Bruce H Hauschel
CWI 97100811
QC1 EXP. 10/1/2015

Casco Bay Steel Structures, Inc.

75 Spring Hill Road
Saco, Maine 04072

Phone: (207) 282-7360

Fax: (207) 282-1179

PROCEDURE QUALIFICATION RECORD

P.Q.R. NO. 418

FILLET WELD SOUNDNESS TEST

TEST RESULTS

Minimum Size Pass Macroetch	Maximum Size Pass Macroetch
1. Passed	1. Passed
2. Passed	2. Passed
3. Passed	3. Passed

Welder's Name Martin Emmons

Test Witnessed By: Bruce Hauschel
CWI #97100811

Bruce H Hauschel
CWI 97100811
QC1 EXP. 10/1/2014

We , the undersigned, certify that the statements in this record are correct and that the welds were prepared and tested in accordance with the requirements of AASHTO/AWS D1.5 (2010) Bridge Weld Code.
Year

Manufacturer or contractor Casco Bay Steel
Authorized by Paul E. Goodele
Date April 18-2013

Parameters 310A
30 V
15.5 ipm

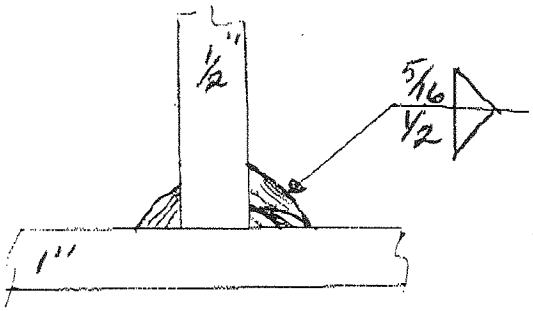

Applus RTD USA • 80 Pleasant Avenue • South Portland • Maine • 04106 • USA
Phone: 207-799-8911 • Fax: 207-7997251

INSPECTION REPORT

CUSTOMER'S NAME: Casco Bay Steel Saco | P.O. NO.: 2464 | PAGE 1 OF 1

RADIOGRAPHY REPORT NO.: RTD-13-0573 | PROCEDURE NO.: AWS D1.5 | QUANTITY: 1

PART NO.: 1GU GMAW | JOB NO.: PQR# 418

SOURCE: TYPE Iridium 192 | SIZE: .106 x .130 | CURIES: 85 | KV: | MA: | SFD: 24"

FILM: TYPE II | SPEED: AA-400 | SINGLE ☐ | DOUBLE ☑ | SIZE: 7 x 17 | SCREENS: 0.005" | FRONT ☑ | BACK ☑ | FILM SIDE ☐ | SOURCE SIDE ☑

IQI: SIZE 20 Pene | GROUP: 1 | SENSITIVITY: 4T | SHIM:

MATERIAL: TYPE CS/SS | THICKNESS: 1" | ACCEPTANCE STANDARD: AWS D1.5

RADIOGRAPHIC SET-UP

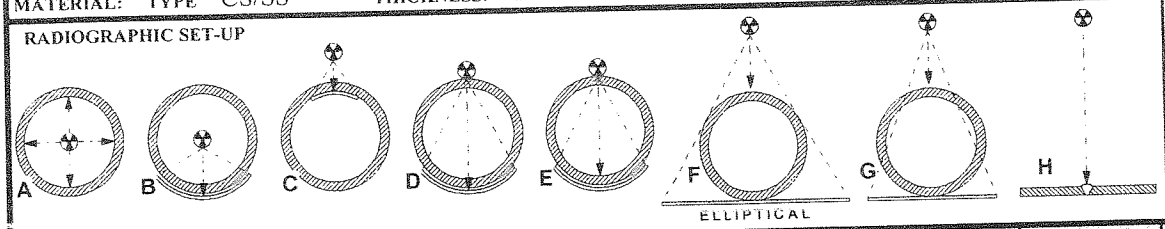

OTHER

SERIAL NUMBER	VIEW NUMBER	CONDITION OF PART (See Definitions)	ACCEPT	REJECT	SERIAL NUMBER	VIEW NUMBER	CONDITION OF PART (See Definitions)	ACCEPT	REJECT
Martin	A - B	2	✓						
Emmons	B - C	2	✓						

REMARKS

DEFINITIONS:
1. Crack
2. Porosity
3. Incomplete Fusion
4. Incomplete penetration
5. Slag
6. Inclusions
7. Gas Holes
8. Shrink
9. No Apparent Defects
10. Film Artifacts
11. Hi/Lo
12. Surface
13. Undercut
14. Void
15. Internal concavity

SIGNATURE: J. Daley

DATE: M - D - Y 04/19/2013 | LEVEL: II

(FORM XXXX REV 0)

Casco Bay Steel Structures, Inc.

75 Spring Hill Road
Saco, Maine 04072

Phone: (207) 282-7360 Fax: (207) 282-1179

PROCEDURE QUALIFICATION RECORD

GMAW #418

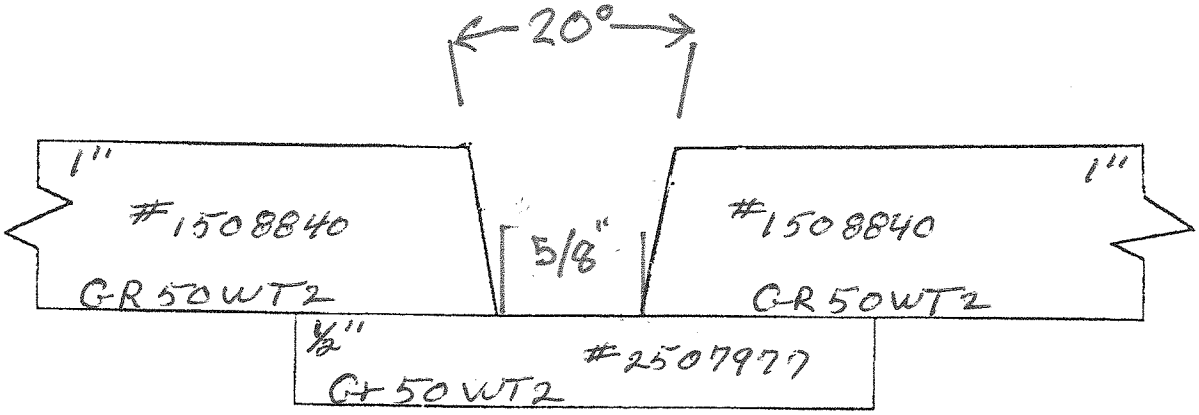

Heat Input (KJ/IN

$\frac{308 \times 29 \times 0.06}{15.5} = 34.6$ KJ/IN

PASS #	LENGTH	TIME	VOLTS	AMPS	TRAVEL	135°
1	25	120	29	290	13.0	70° Low
2		120	29.5	295	13.0	250°
3		90	29.5	300	16.6	180°
4		105	29.8	310	14.2	250°
5		110	29.5	310	13.6	250°
6		110	29	310	13.6	250°
7		115	29	320	13.0	300°
8		105	28.8	320	14.2	340°
9		95	29	320	15.7	355°
10		75	29.6	315	19.9	360°
11		95	29	295	15.7	360°
12		90	29.8	290	16.6	390°
13		85	29	310	17.6	440° High
14		90	29	310	16.6	390°
15		80	28.8	310	18.7	300°
16	25	90	29	320	16.6	340°
17						
18						
19						
AVERAGE	NA	NA	29.2	307.8	15.5	

SIGNATURE: Paul E. Goodale

NUCOR
PLATE MILL

P.O.Box 279
Winton, NC 27986
(252) 356-3700

Mill Test Report

NUCOR "It's our Nature."

Issuing Date : 12/20/2011 B/L No. : 313126 Load No. : 314995 Our Order No. : 97007/1 Cust. Order No. : NE-44895

Vehicle No: PTTX 136305

Specification : 1.0000" x 78.000" x 978.000" / 25.4mm x 1981.2mm x 24841.2mm
AASHTO M270 GR50W/345W T2&T1/ASTM A709-11 GR50W/345W T2&T1/ASTM A588-10 Grade B

Sold To : INFRA-METALS
8 PENT HIGHWAY
WALLINGFORD,CT 06492

Ship To : INFRA METALS C/O CASCO BAY STEEL
ST DELIVERY
FAX TOM DELANEY 203-294-2993
BIDDEFORD-SACHO,ME 04005

Marking :

Heat No	C	Mn	P	S	Si	Cu	Ni	Cr	Mo	Al(tot)	V	Nb	Ti	N	Ca	B	Sn	CEQ	PCM
1508840	0.17	1.02	0.011	0.001	0.30	0.30	0.22	0.46	0.02	0.028	0.026	0.002	0.002		0.0041	0.0002	0.013	0.48	0.28

Tensile Test								Charpy Impacts											
Plate Serial No	Pieces	Tons	Dir.	(psi) Yield	(psi) Tensile	Elongation % in 2"	Elongation % in 8"	Dir.	(ft-lbs) 1	(%) shear	(ft-lbs) 2	(%) shear	(ft-lbs) 3	(%) shear	(ft-lbs) Ave.	(%) shear	Size	Temp (°F)	Min Ave.
1508840-01	1	10.81	T	57,200	81,900		17.9	H-L	143.9		230.6		141.9		172.1		10mm	10	15
			T	50,100	80,900		23.4	H-L	140.3		119.2		207.1		155.5		10mm	10	15
1508840-03	3	32.45	T	57,200	81,900		17.9	H-L	143.9		230.6		141.9		172.1		10mm	10	15
			T	50,100	80,900		23.4	H-L	140.3		119.2		207.1		155.5		10mm	10	15

Metric Results								Charpy Impacts											
Tensile Test																			
Plate Serial No	Pieces	Tons	Dir.	(MPa) Yield	(MPa) Tensile	Elongation % in 2"	Elongation % in 8"	Dir.	(J) 1	(%) shear	(J) 2	(%) shear	(J) 3	(%) shear	(J) Ave.	(%) shear	Size	Temp (°C)	Min Ave.
1508840-01	1	9.81	T	394	565		17.9	H-L	195.1		312.6		192.4		233.4		10mm	-12	20
			T	345	558		23.4	H-L	190.3		161.7		280.8		210.9		10mm	-12	20
1508840-03	3	29.43	T	394	565		17.9	H-L	195.1		312.6		192.4		233.4		10mm	-12	20
			T	345	558		23.4	H-L	190.3		161.7		280.8		210.9		10mm	-12	20

.17 + .22 + .1012 + .0346 = .5258 = 53% CE

NFCM, T1 and T2, 15ft-lbs @ +40 F (20J @ +4 C), H frequency. Temperature reduced by 15 F for each 10 ksi over 65 ksi ;

Manufactured to fully killed fine grain practice by Electric Arc Furnace. Welding or weld repair was not performed on this material. Mercury has not been used in the direct manufacturing of this material. Produced as continuous cast discrete plate as-rolled, unless otherwise noted in Specification.

Yield by 0.5EUL method unless otherwise specified. Ceq = C+(Mn/6)+((Cr+Mo+V)/5)+((Cu+Ni)/15)

Pcm = C+(Si/30)+(Mn/20)+(Cu/20)+(Ni/60)+(Cr/20)+(Mo/15)+(V/10)+5B

Melted and manufactured in the USA. ISO 9001:2008 certified (#008063) by SRI Quality System Registrar (#0985-09). PED 97/23/EC 7/2 Annex 1, Para. 4.3 Compliant. DIN 50049 3.1.B/EN 10204 3.1B(2004), DIN EN 10204 3.1(2005) compliant. For ABS grades only, Quality Assurance certificate 09-MMPQA-546

We hereby certify that the contents of this report are accurate and correct. All test results and operations performed by the material manufacturer are in compliance with the applicable specifications, including customer specifications.

T. A. Depretis

T. A. Depretis, Metallurgist

12/23/2011 8:46:57 AM

NUCOR
PLATE MILL

P.O.Box 279
Winton, NC 27986
(252) 356-3700

Mill Test Report

NUCOR
It's our Nature

Issuing Date : 12/01/2012 B/L No. : 342359 Load No. : 344430 Our Order No. : 105913/6 Cust. Order No. : NE-60510

Vehicle No: PTTX 137275

Specification : 0.5000" x 96.000" x 480.000" / 12.7mm x 2438.4mm x 12192.0mm
AASHTO M270 GR50W/345W T2&T1/ASTM A709-11 GR50W/345W
T2&T1/ASTM A588-10 Grade B

Sold To : INFRA-METALS
8 PENT HIGHWAY
WALLINGFORD,CT 06492

Ship To : INFRA METALS C/O CASCO BAY STEEL
ST DELIVERY
FAX TOM DELANEY 203-294-2993
BIDDEFORD-SACHO,ME 04005

Marking : PM PARTS

Heat No	C	Mn	P	S	Si	Cu	Ni	Cr	Mo	Al(tot)	V	Nb	Ti	N	Ca	B	Sn	CEQ	PCM
2507977	0.17	1.05	0.010	0.001	0.34	0.30	0.22	0.48	0.02	0.030	0.033	0.002	0.002				0.012	0.48	0.28

Tensile Test

Plate Serial No	Pieces	Tons	Dir.	(psi) Yield	(psi) Tensile	Elongation % in 2"	Elongation % in 8"
2507977-03	6	19.60	T	60,900	86,800		18.1
			T	62,300	86,800		17.9

Charpy Impacts

Dir.	(ft-lbs) 1	(%) shear	(ft-lbs) 2	(%) shear	(ft-lbs) 3	(%) shear	(ft-lbs) Ave.	(%) shear	Size	Temp (°F)	Min Ave.
H-L	101.9		111.6		85.0		99.5		10mm	40	15
H-L	69.8		61.4		78.7		70.0		7.5mm	40	15

Metric Results

Tensile Test

Plate Serial No	Pieces	Tons	Dir.	(MPa) Yield	(MPa) Tensile	Elongation % in 2"	Elongation % in 8"
2507977-03	6	17.78	T	420	598		18.1
			T	430	598		17.9

Charpy Impacts

Dir.	(J) 1	(%) shear	(J) 2	(%) shear	(J) 3	(%) shear	(J) Ave.	(%) shear	Size	Temp (°C)	Min Ave.
H-L	138.2		151.3		115.2		134.9		10mm	4	20
H-L	94.6		83.3		106.7		94.9		7.5mm	4	20

.17 + .23 + .10 + .03 = 53% CE

NFCM, T1 and T2, 15ft-lbs @ +40 F (20J @ +4 C), H frequency. Temperature reduced by 15 F for each 10 ksi over 65 ksi ;

Manufactured to fully killed fine grain practice by Electric Arc Furnace. Welding or weld repair was not performed on this material. Mercury has not been used in the direct manufacturing of this material. Produced as continuous cast discrete plate as-rolled, unless otherwise noted in Specification.
Yield by 0.5EUL method unless otherwise specified. Ceq = C+(Mn/6)+((Cr+Mo+V)/5)+((Cu+Ni)/15)
Pcm = C+(Si/30)+(Mn/20)+(Cu/20)+(Ni/60)+(Cr/20)+(Mo/15)+(V/10)+5B
Melted and manufactured in the USA. ISO 9001:2008 certified (#008063) by SRI Quality System Registrar (#0985-09). PED 97/23/EC 7/2 Annex 1, Para. 4.3 Compliant.
DIN 50049 3.1.B/EN 10204 3.1B(2004), DIN EN 10204 3.1(2005) compliant. For ABS grades only, Quality Assurance certificate 09-MM PQA-546

We hereby certify that the contents of this report are accurate and correct. All test results and operations performed by the material manufacturer are in compliance with the applicable specifications, including customer specifications.

T. A. Depretis

T. A. Depretis, Metallurgist

12/04/2012 8:08:18 AM

CERTIFICATE OF ANALYSIS

ESAB

CERTIFICATE OF TYPICAL ANALYSIS

ORDER # : 000000
PART NUMBER : 243412889

END USER: ESAB GROUP
END USER ITEM: HANOVER, PA 17331
DIAMETER & LENGTH: .052
TRADE NAME: COREWELD
TYPE : 88-HS Ni1
LOT NO: 89843
CLASSIFICATION : E80C-Ni1
This material conforms to:
AWS A5.28

CHEMICAL ANALYSIS :

	PROPERTIES	SPEC. REQUIREMENTS
Carbon	.053	.12(Max)
Manganese	1.23	1.50(Max)
Silicon	.55	.90(Max)
Phosphorus	.010	.025(Max)
Sulphur	.016	.030(Max)
Nickel	1.03	.80-1.10
Molybdenum	.01	.30(Max)
Vanadium	.01	.03(Max)
Copper	.08	.35(Max)

RADIOGRAPHY :
XRAY Satisfactory

DIFFUSIBLE HYDROGEN :
AVERAGE : 1.5 (ml/100gr Avg).
AVERAGE 2 : 0

WELDING REQUIREMENTS:
SHIELDING GAS USED: 75 Ar/25 CO2

TENSILE REQUIREMENTS:
AS WELDED
MIN YIELD(psi) : 68000
MIN YIELD(MPa) : 470
MIN TENSILE(psi) : 80000
MIN TENSILE(MPa) : 550 MAX TENSILE(MPa) :
MIN ELONG : 24

TENSILE RESULTS :

	AS WELDED
GAS USED :	75/25
CALCULATE YIELD(psi) :	69600
CALCULATE YIELD(Mpa) :	480
CALCULATE TENSILE(psi) :	83600
CALCULATE TENSILE(Mpa) :	576
% ELONGATION :	27.0

The ESAB Group, Inc.
1500 Karen Lane
Hanover, Pa 17331
www.esab.com
Fax: 1-800-444-8911
Phone: 1-800-ESAB-123

By: K. Wildasin
K. Wildasin, Supervisor, Q.A. Services

MISTRAS Asset Protection Solutions | Services Division

P: (508) 832-5500 • F: (508) 832-5557
2 Millbury Street • Auburn, MA 01501
www.mistrasgroup.com

Casco Bay Steel
75 Spring Hill RD.
Saco ME. 04072

Sample Number: 487952-1
Job Number: 487952
Purchase Order No: 2465

Attn:

Specification: AWS D1.5

Sample Description: Weld Metal A5-28, E80C-NI1 PQR# 418 FCM

Chemical Test Report:

Silicon	0.73
Manganese	1.46
Carbon	0.07
Phosphorus	0.011
Sulfur	0.014
Nickel	1.00
Iron	Balance
Molybdenum	<0.01
Vanadium	0.01
Copper	0.08
Others except FE	0.12

In Witness Whereof, I Have Hereunto Set My Hand
21ST Day of May, 2013
Conam Inspection Inc.

Lynn Anderson

MISTRAS Asset Protection Solutions | Services Division

P: (508) 832-5500 • F: (508) 832-5557
2 Millbury Street • Auburn, MA 01501
www.mistrasgroup.com

To: CASCO BAY STEEL
75 SPRING HILL RD.
SACO ME. 04072

Attn:

Date: 5-21-13

Job No: 487952

Lab No: Auburn

Order No: 2465

Material: 1.00" THICK
ASTM-A-709-11 GR50W

P.Q.R. No: 418 FCM

Specifications:
AWS D1.5

Welding Procedure Qualification

SIDE BEND – NO DEFECTS SIDE BEND – NO DEFECTS
SIDE BEND – NO DEFECTS SIDE BEND – NO DEFECTS

Mark	Yield .2% Offset Pounds/s Sq. in.	Ultimate Strength Pounds/s Sq. in.	Elongation in 2" %	% Reduction In Area	
T-1	N/R	87,760	N/R	N/R	BM
T-2	N/R	87,110	N/R	N/R	BM
AWT	79,000	89,000	27.5	58.5	

3 – MACRO EXAMINATIONS- NO DEFECTS

WELDER: DANA OUELLETTE
PROCESS: GMAW-SEMI-AUTO
POSITION: FLAT 1G
ELECTRODE: E80C-NI1

In witness whereof, I have hereunto set my hand this
21ST Day of May, 2013
CONAM INSPECTION, INC.

Lynn Anderson, Mech. Test Technician

MISTRAS Asset Protection Solutions | Services Division

P: (508) 832-5500 • F: (508) 832-5557
2 Millbury Street • Auburn, MA 01501
www.mistrasgroup.com

To: Casco Bay Steel
75 Spring Hill Rd
Saco, ME 04072

Date: 5-21-13

Job No: 487952

Lab No: Auburn

Order No: 2465

Material: 1.00" THICK ASTM-A-709-11 GR.50

P.Q.R. # 418 FCM

Specifications:
AWS D1.5

Attn:

Charpy Impact test

Charpy specimens, 10 mm x 10 mm were tested at -20^0 F on the 240 ft lb. scale. Velocity of the Head at the time of impact was 17 ft per second.

Sample	Notch location	Notch type	Impact Values	
1	WELD	Vee	44	Ft. Lb.
2	WELD	Vee	48	Ft. Lb.
3	WELD	Vee	55	Ft. Lb.
4	WELD	Vee	55	Ft. Lb.
5	WELD	Vee	49	Ft. Lb.

In witness whereof, I have hereunto set my hand this
21ST Day of May, 2013
Conam Inspection

Lynn Anderson, Mech. Test Technician

Casco Bay Steel Structures, Inc.

WELDING PROCEDURE SPECIFICATION

Material specification: ASTM Gr. 50 + G-50W
Welding process: Gas Metal ARC Welding (GMAW)
Manual or machine: Semi Auto
Position of welding: Flat + Horizontal
Filler metal specification: AWS-A5.28 ESAB
Filler metal classification: E80C-Ni1
Flux: N A
Shielding gas: 90% AR / 10% CO^2 Flow rate: 35CFH +8/-4, Elec. Stickout 5/8
Single or multiple pass: Single + multiple
Single or multiple arc: Single
Welding current: DC
Polarity: DCEP
Welding progression: See Detail
Root treatment: Blast Clean - Wire Brush - Area To be Free of Slag - Rust - Moisture
Preheat and interpass temperature: See Table and as Required
Postheat temperature: As Required
Heat Input Min 24.4 KJ/in Max 38.3 KJ/in P.Q.R. 418 - FCM = 34.8 KJ/IN
* 35.0 KJ/in Min for single pass

Minimum Preheat and Interpass Temperature, °C [°F]

Welding Process (Base Metal)	To 20 mm [3/4 in] Incl.	Thickness of Thickest Part at Point of Welding, mm [in]: Over 20 mm [3/4 in] to 40 mm [1-1/2 in] Incl.	Over 40 mm [1-1/2 in] to 65 mm [2-1/2 in] Incl.	Over 65 mm [2-1/2 in]
SAW; GMAW; FCAW; SMAW (M270M [M270] [A 709M (A 709)] 345 [50])	10 [50]	20 [70]	65 [150]	110 [225]
FCM Gr50	150°F	200°F	225°F	325°F
FCM Gr50W	150°F	250°F	325°F	350°F

Max Interpass 440°F

WELDING PROCEDURE

Sec. 5.12.4.2

AWS D1.5

Pass no.	Electrode size	Welding current: Amperes	Volts	Travel speed
AS REQ	.052	307	29.2	15.5
		338.7	31	17.5
		To	To	To
		276.3	27	13.5
* 1 Pass	.052	338.7	31	17.5
		to	to	to
		281.3	28.0	13.5

Joint detail: Fillet

2F

To 3/8

To 5/8

1F

To 1/2

This procedure may vary due to fabrication sequence, fit-up, pass size, etc., within the limitation of variables given in applicable A.W.S. codes or contract specifications

Procedure no. FCM 610

Revision no.

Contractor: Casco Bay Steel

Authorized By: Paul C. Goodale

Date: 8-1-2013