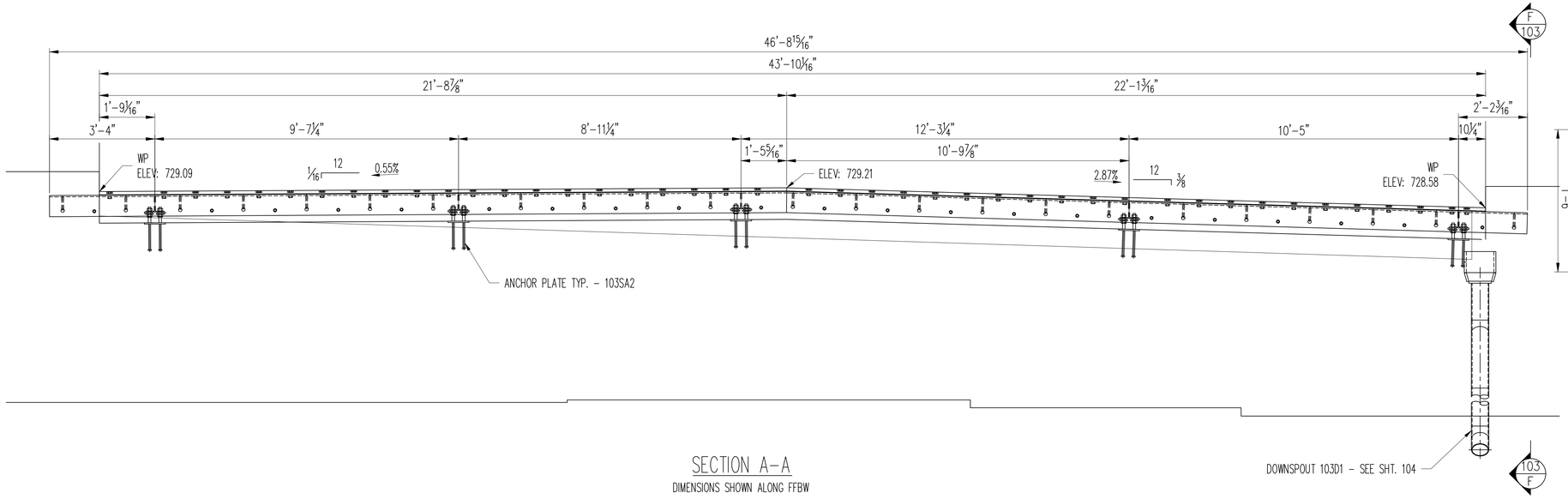

SECTION A-A

DIMENSIONS SHOWN ALONG FFBW

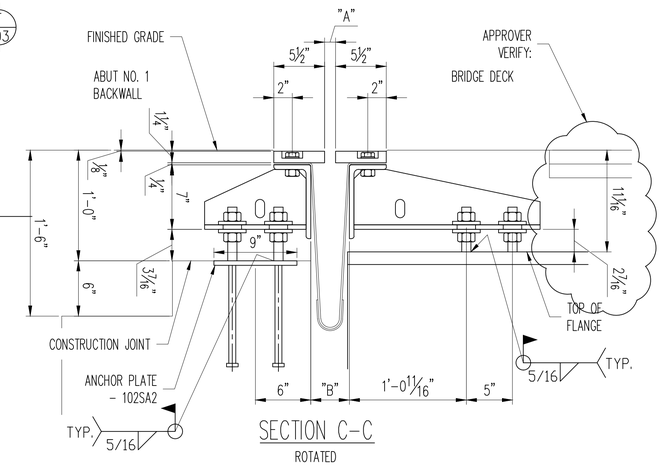

SECTION C-C

ROTATED

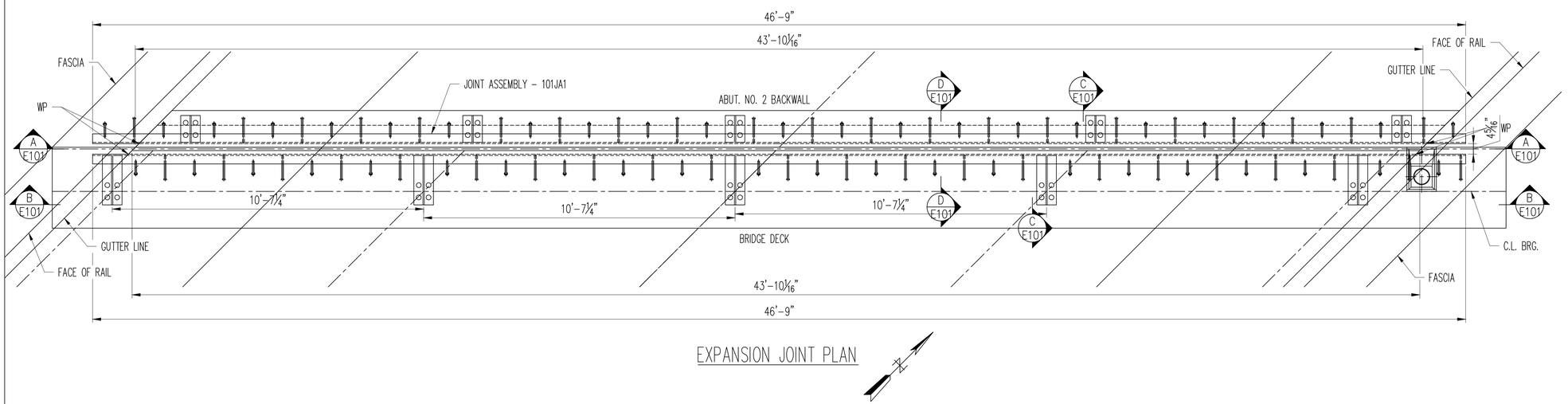

EXPANSION JOINT PLAN

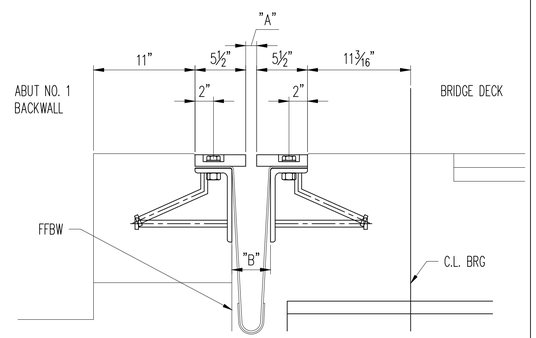

SECTION D-D

ROTATED

TEMP. SETTING CHART		
TEMP °F	DIM "A"	DIM "B"
0	1 15/16"	4 15/16"
15°	1 3/4"	4 3/4"
30°	1 1/2"	4 1/2"
45°	1 5/16"	4 5/16"
60°	1 1/16"	4 1/16"
75°	7/8"	3 7/8"
90°	11/16"	3 11/16"
105°	7/16"	3 7/16"

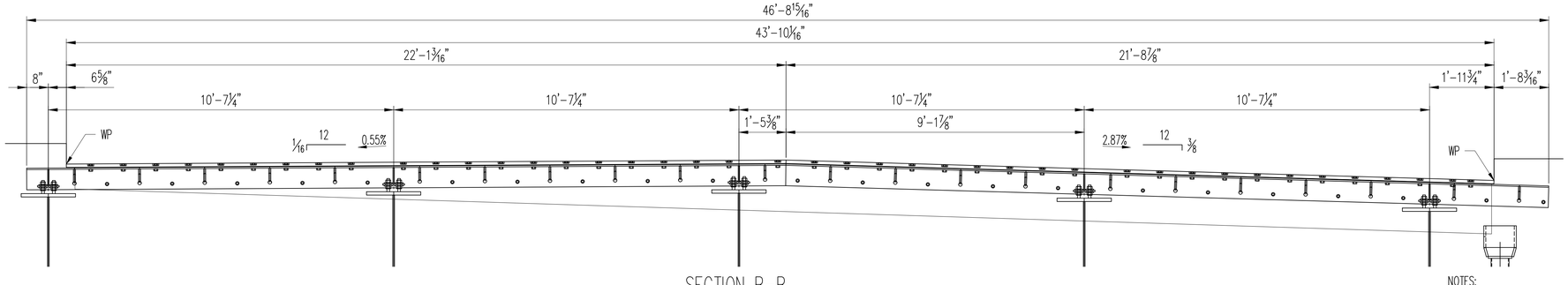

SECTION B-B

NOTES:
- ALL DIMENSIONS SHOWN HORIZONTAL U.N.O.
- ALL DIMENSIONS SHOWN AT 45°F.

REV.	DATE	REMARKS	DWN	CHK	APVL	SHOP

MATERIAL:	SURFACE PREP. & PAINT:	HOLES:	SHOP BOLTS:
M270M-250 U.N.O.	GALV. - PER STD. 726.08	AS NOTED	AS NOTED

DESCRIPTION: EXPANION JOINT - FABRICATION SHEET

CASCO BAY STEEL STRUCTURES, INC.
1 WALLACE AVE. PHONE (207) 780-6722
SOUTH PORTLAND, ME 04106 FAX. (207) 780-6726

STRUCTURE:	BRIDGE NO. 177 VT 100 OVER MAD RIVER STATE OF VERMONT AGENCY OF TRANS.	DRAWN: SLB	DATE: 03/02/16
		CHKD: JEB	DATE: 03/02/16
LOCATION:	WAITSFIELD, VT	JOB NO.	DWG NO.
PROJ NO.	BRF 013-4(39)	651	E101
CUSTOMER:	A.L. ST. ONGE CONTRACTOR, INC.		REV. 0

3/3/2016 8:52:20 AM, FOR APPROVAL - JB DETAILING

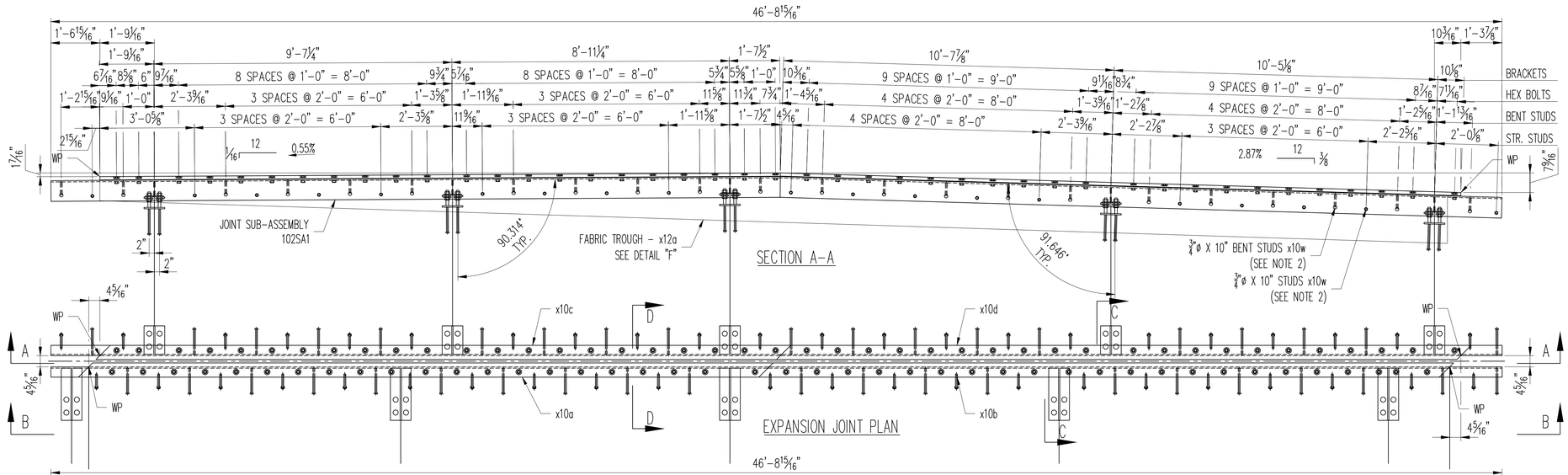

SECTION A-A

EXPANSION JOINT PLAN

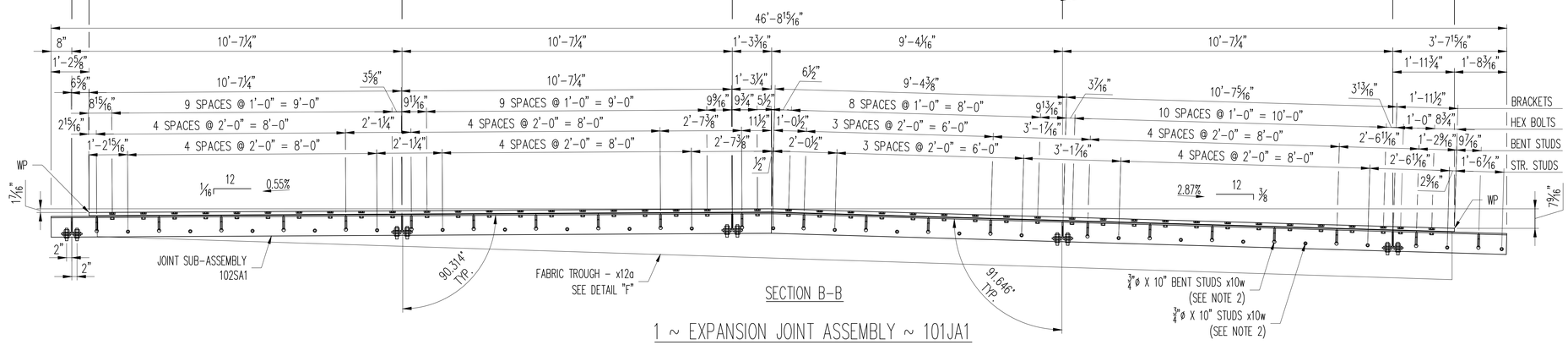

SECTION B-B

1 ~ EXPANSION JOINT ASSEMBLY ~ 101JA1

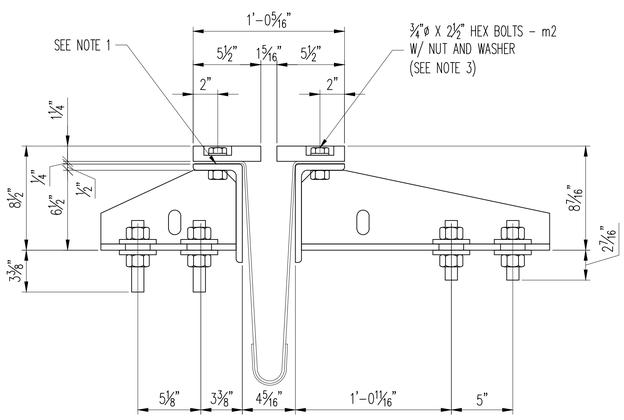

SECTION C-C

ROTATED

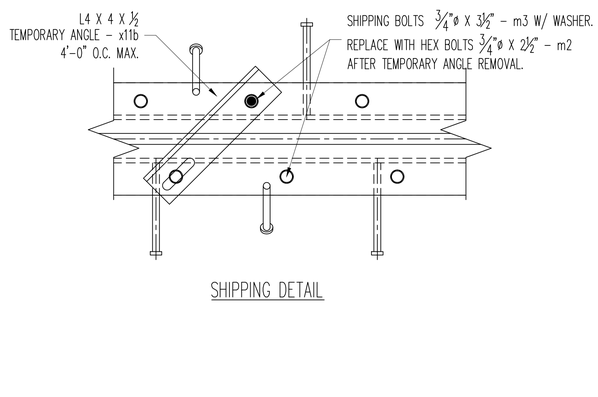

SHIPPING DETAIL

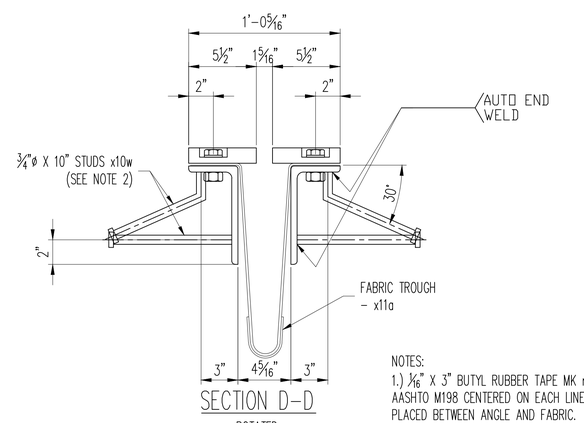

SECTION D-D

ROTATED

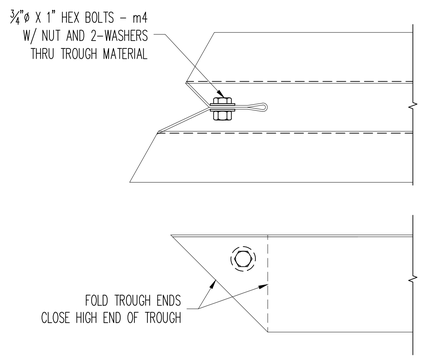

DETAIL "F"

JOINT STEEL NOT SHOWN FOR CLARITY

BILL OF MATERIAL

BLOCK QTY.	BLOCK NO.		MARK	NO. PCS	SHAPE	LENGTH FT	LENGTH IN		REMARKS	
	1	1	101JA1	ONE	PLATE JOINT	46	8 15/16		GALV	
		2	x10a	1	PL 1 1/4 X 5 1/2	22	4 9/16		GALV	
		3	x10b	1	PL 1 1/4 X 5 1/2	22	4 9/16		GALV	
		4	x10c	1	PL 1 1/4 X 5 1/2	22	4 9/16		GALV	
		5	x10d	1	PL 1 1/4 X 5 1/2	22	4 9/16		GALV	
		6	x11a	1	L8 X 4 X 1/2	23	1 11/16		GALV	
		7	x11b	1	L8 X 4 X 1/2	23	11 3/16		GALV	
		8	x11c	1	L8 X 4 X 1/2	23	10		GALV	
		9	x11d	1	L8 X 4 X 1/2	23	3		GALV	
		10	x10k	80	PL 3/8 X 3	0	3		GALV	
		11	x10m	5	PL 1/2 X 8	0	11		GALV	
		12	x10n	5	PL 1/2 X 6	0	11		GALV	
		13	x10p	5	PL 1/2 X 8	1	8 3/16		GALV	
		14	x10r	5	PL 1/2 X 6	0	8 3/16		GALV	
		15	x12a	1	NP 5/32 X 46	43	5 7/8		FABRIC TROUGH	
		16	x11b	10	L4 X 4 X 1/4	1	5 3/16		GALV	
		17	x10w	84	3/4 DIA STUD	0	10		HEADED STUD	
		18	m1	2	1/16 X 3 TAPE	43	6		AASHTO M198	
		19	m2	86	3/4 DIA GALV BOLTS	0	2 1/2		W/ NUT & WASHER	
		20	m3	20	3/4 DIA GALV BOLTS	0	3 1/2		W/ NUT & WASHER	
		21	m4	1	3/4 DIA GALV BOLTS	0	1		W/ NUT & 2-WASHERS	
		22	1m1	20	1"ø THRD. RODS	0	6		W/ 2-NUTS	
		23	1m2	20	1"ø THRD. RODS	0	5		W/ 2-NUTS	

NOTES:
1.) 1/16" X 3" BUTYL RUBBER TAPE MK m1 PER AASHTO M198 CENTERED ON EACH LINE OF BOLTS AND PLACED BETWEEN ANGLE AND FABRIC.
2.) STUDS WELDED AT 2'-0" O.C. BENT AS SHOWN ALTERNATE STRAIGHT STUDS AT 2'-0" O.C.
3.) WELD NUTS UNDERNEATH ON (3) SIDES COAT BOLT & NUT THREADS WITH NICKEL BASED NEVER SEIZE LUBE.

REV.	DATE	REMARKS	DWN	CHK	APVL	SHOP

MATERIAL:	SURFACE PREP. & PAINT:	HOLES:	SHOP BOLTS:
M270M-250 U.N.O.	GALV. - PER STD. 726.08	AS NOTED	AS NOTED

DESCRIPTION: EXPANION JOINT - ERECTION SHEET

CASCO BAY STEEL STRUCTURES, INC.
1 WALLACE AVE. PHONE (207) 780-6722
SOUTH PORTLAND, ME 04106 FAX. (207) 780-6726

STRUCTURE:	BRIDGE NO. 177 VT 100 OVER MAD RIVER STATE OF VERMONT AGENCY OF TRANS.	DRAWN: SLB	DATE: 03/02/16
		CHKD: JEB	DATE: 03/02/16
LOCATION:	WAITSFIELD, VT	JOB NO.	DWG NO.
PROJ NO.	BRF 013-4(39)	651	101
CUSTOMER:	A.L. ST. ONGE CONTRACTOR, INC.		REV. 0

3/3/2016 8:52:24 AM, FOR APPROVAL - JB DETAILING

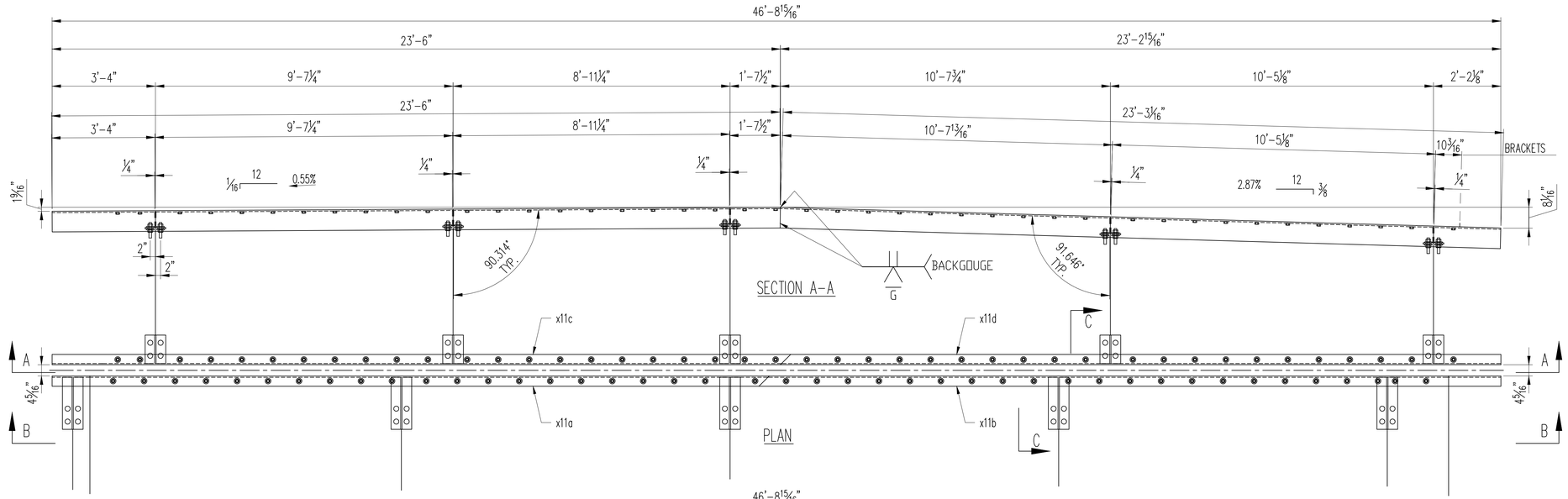

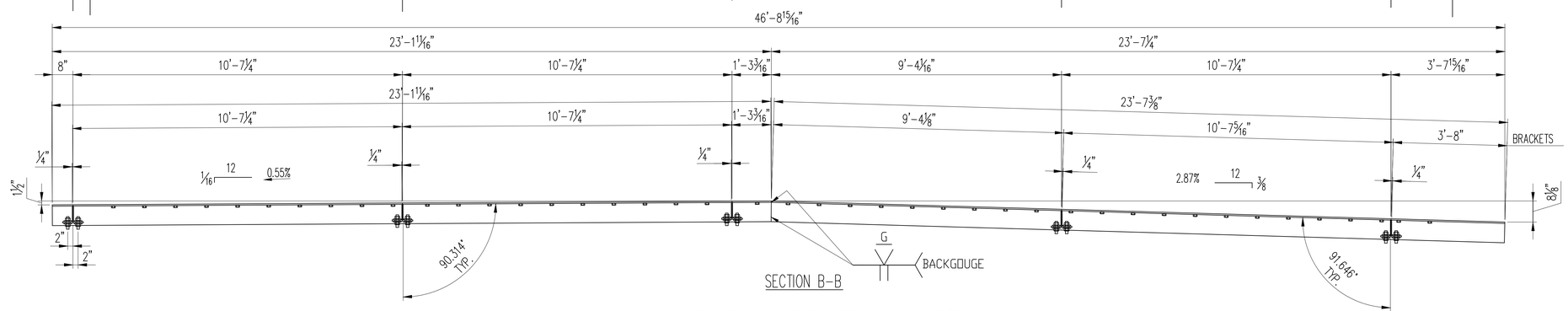

1 ~ LOWER JOINT SUB-ASSEMBLY ~ 102SA1

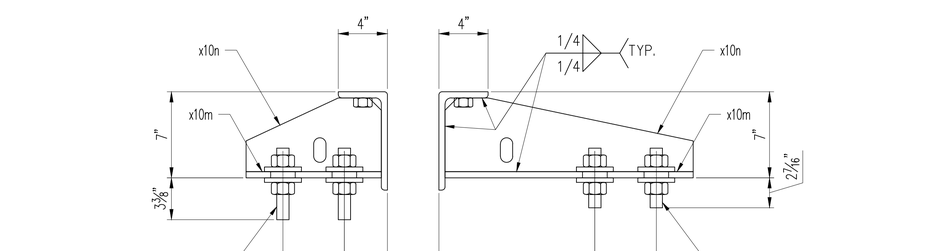

SECTION C-C

ROTATED

REV.	DATE	REMARKS	DWN	CHK	APVL	SHOP

MATERIAL:	SURFACE PREP. & PAINT:	HOLES:	SHOP BOLTS:
M270M-250 U.N.O.	GALV. - PER STD. 726.08	AS NOTED	AS NOTED

DESCRIPTION: EXPANION JOINT - ERECTION SHEET

CASCO BAY STEEL STRUCTURES, INC.
1 WALLACE AVE. PHONE (207) 780-6722
SOUTH PORTLAND, ME 04106 FAX. (207) 780-6726

STRUCTURE:	BRIDGE NO. 177 VT 100 OVER MAD RIVER STATE OF VERMONT AGENCY OF TRANS.	DRAWN: SLB	DATE: 03/02/16
		CHKD: JEB	DATE: 03/02/16
LOCATION:	WAITSFIELD, VT	JOB NO.	DWG NO.
PROJ NO.	BRF 013-4(39)	651	102
CUSTOMER:	A.L. ST. ONGE CONTRACTOR, INC.		REV. 0

3/3/2016 8:52:28 AM. FOR APPROVAL - JB DETAILING

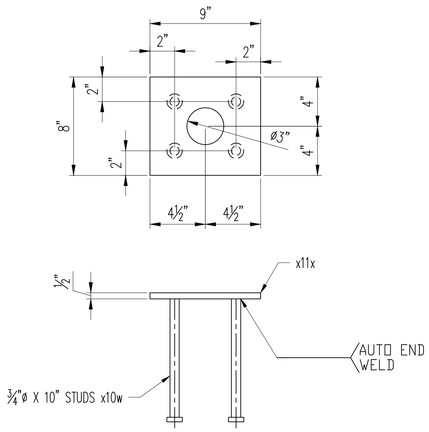

5 ~ ANCHOR PLATES ~ 102SA2

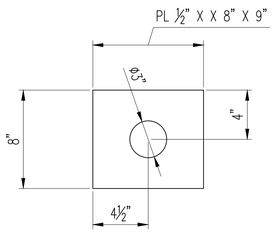

5 ~ x11x

BILL OF MATERIAL

BLOCK QTY.	BLOCK NO.		MARK	NO. PCS	SHAPE	LENGTH FT	LENGTH IN		REMARKS	
	1	1	102SA2	FIVE	ANCHOR PLATE				GALV	
		2	x11x	5	PL ½ X 8	0	9		GALV	
		3	x10w	20	¾ DIA STUD	0	10		HEADED STUD	
		4								
		5								
		6								
		7								
		8								
		9								
		10								
		11								
		12								
		13								
		14								
		15								
		16								
		17								
		18								
		19								
		20								

REV.	DATE	REMARKS	DWN	CHK	APVL	SHOP

MATERIAL:	SURFACE PREP. & PAINT:	HOLES:	SHOP BOLTS:
M270M-250 U.N.O.	GALV. - PER STD. 726.08	AS NOTED	AS NOTED

DESCRIPTION: EXPANION JOINT - ANCHOR PLATES

CASCO BAY STEEL STRUCTURES, INC.
1 WALLACE AVE. PHONE (207) 780-6722
SOUTH PORTLAND, ME 04106 FAX. (207) 780-6726

STRUCTURE:	BRIDGE NO. 177 VT 100 OVER MAD RIVER STATE OF VERMONT AGENCY OF TRANS.	DRAWN: SLB	DATE: 03/02/16
		CHKD: JEB	DATE: 03/02/16
LOCATION:	WAITSFIELD, VT	JOB NO.	DWG NO.
PROJ NO.	BRF 013-4(39)	651	103
CUSTOMER:	A.L. ST. ONGE CONTRACTOR, INC.		REV. 0

3/3/2016 8:52:33 AM, FOR APPROVAL – JB DETAILING

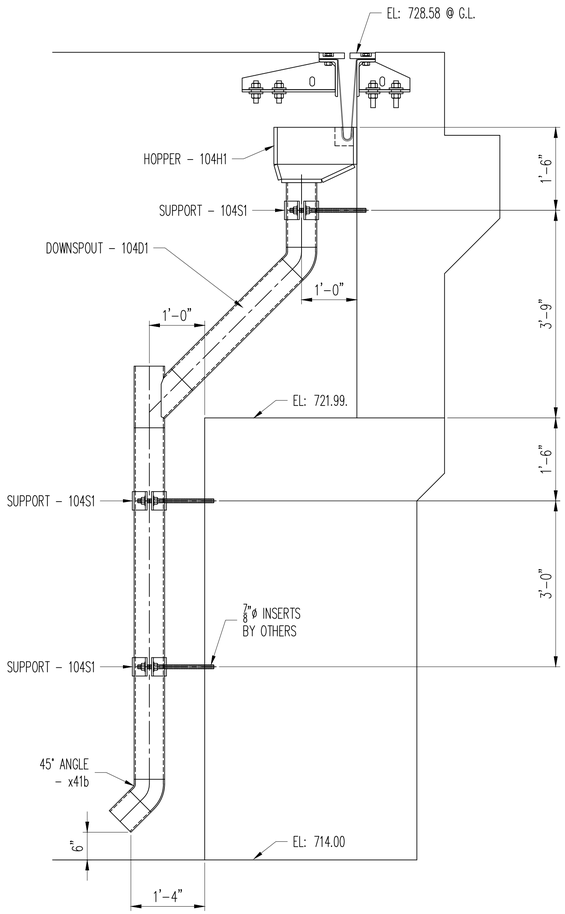

SECTION F-F

SHEET E101

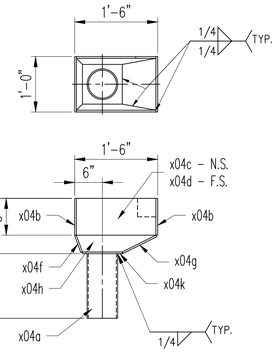

1 – HOPPER – 104H1

APPROVER VERIFY CONFIGURATION OF DRAIN BOX

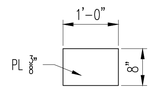

2 ~ x04b

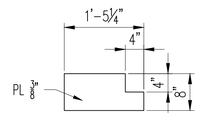

1 ~ x04c

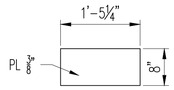

1 ~ x04d

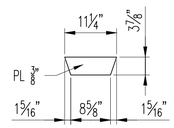

1 ~ x04f

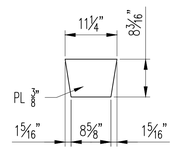

1 ~ x04g

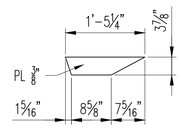

2 ~ x04h

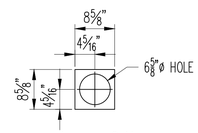

1 ~ x04k

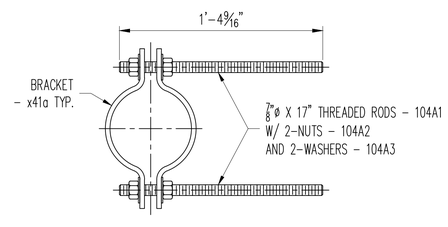

3 ~ SUPPORT ~ 104S1

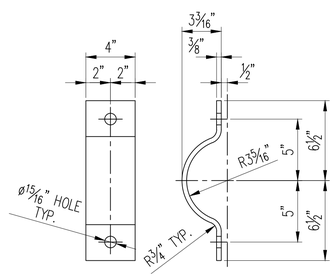

6 ~ BRACKET ~ x41a

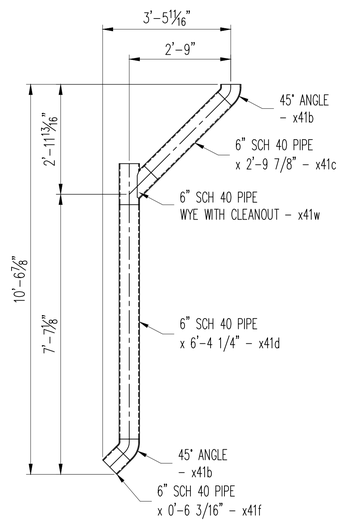

1 – DOWNSPOUT – 104D1

BILL OF MATERIAL

BLOCK QTY.	BLOCK NO.		MARK	NO. PCS	SHAPE	LENGTH FT	LENGTH IN		REMARKS	
		1	104D1	1	DOWNSPOUT	10	6⅞		GALV	
		2	x41b	2	6" 45° ELBOW				A500B	
		3	x41c	1	6" SCH 40 PIPE	2	9⅞		A500B	
		4	x41d	1	6" SCH 40 PIPE	6	4¼		A500B	
		5	x41f	1	6" SCH 40 PIPE	0	6 3/16		A500B	
		6								
		7	104H1	1	HOPPER	2	2		GALV	
		8	x04b	2	PL ⅜ X 8	1	0		GALV	
		9	x04c	1	PL ⅜ X 8	1	5¼		GALV	
		10	x04d	1	PL ⅜ X 5	1	5¼		GALV	
		11	x04f	1	PL ⅜ X 3⅞	0	11¼		GALV	
		12	x04g	1	PL ⅜ X 8 3/16	0	11¼		GALV	
		13	x04h	1	PL ⅜ X 3⅞	1	5¼		GALV	
		14	x04k	1	PL ⅜ X 8⅝	0	8⅝		GALV	
		15								
		16	104S1	3	SUPPORT				GALV	
		17	x41a	6	PL ⅜ X 4	1	3⅜		GALV	
		18								
		19	104A1	6	ANCHOR RODS	1	5			
		20	1m3	6	⅞"ø THRD. RODS	1	5		W/ 2-NUTS & 2-WASHERS	

REV.	DATE	REMARKS	DWN	CHK	APVL	SHOP

MATERIAL:	SURFACE PREP. & PAINT:	HOLES:	SHOP BOLTS:
M270M-250 U.N.O.	GALV. - PER STD. 726.08	AS NOTED	AS NOTED

DESCRIPTION: EXPANION JOINT - DOWNSPOUT

CASCO BAY STEEL STRUCTURES, INC.
1 WALLACE AVE. PHONE (207) 780-6722
SOUTH PORTLAND, ME 04106 FAX. (207) 780-6726

STRUCTURE: BRIDGE NO. 177
VT 100 OVER MAD RIVER

STATE OF VERMONT AGENCY OF TRANS.

DRAWN:	DATE:
SLB	03/02/16
CHKD:	DATE:
JEB	03/02/16

LOCATION:	WAITSFIELD, VT	JOB NO.	DWG NO.
PROJ NO.	BRF 013-4(39)	651	104
CUSTOMER:	A.L. ST. ONGE CONTRACTOR, INC.		REV. 0

3/3/2016 8:52:38 AM. FOR APPROVAL _JB DETAILING

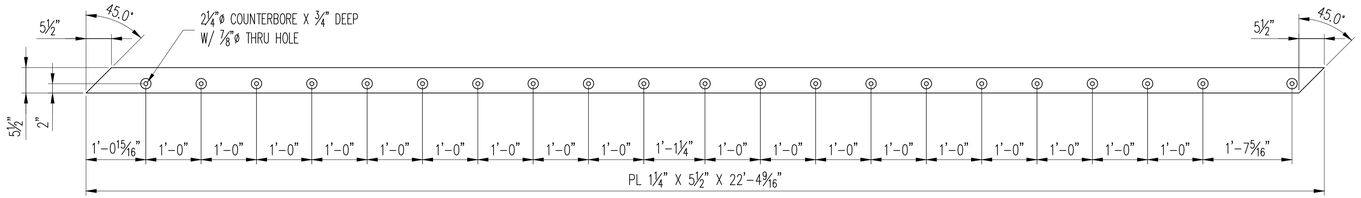

1 ~ x10a

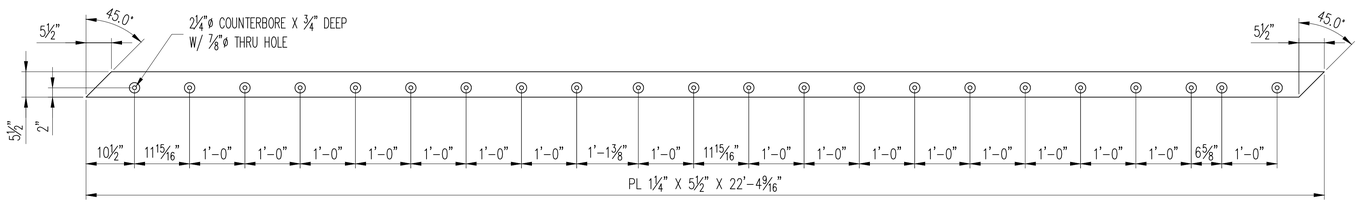

1 ~ x10b

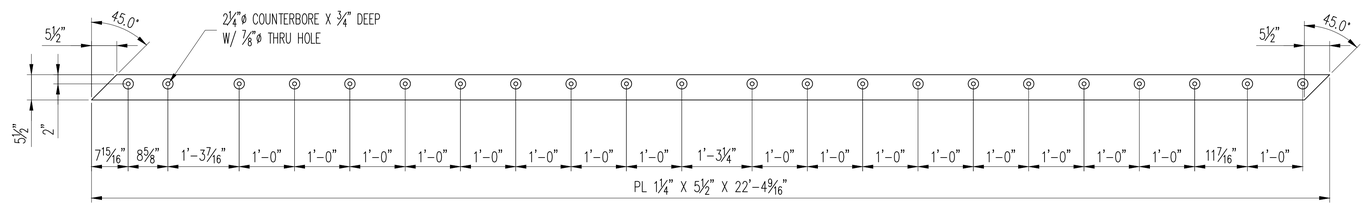

1 ~ x10c

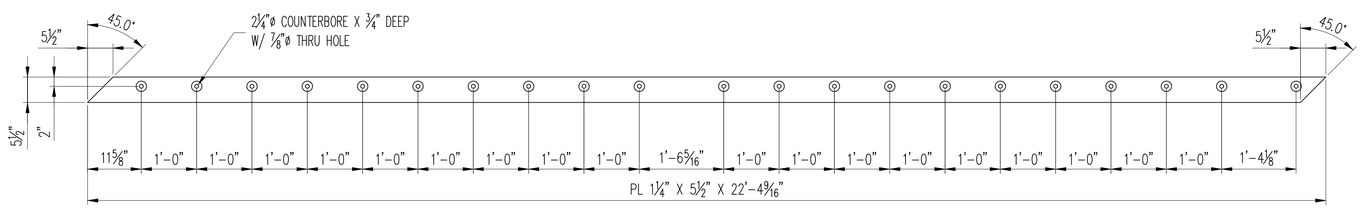

1 ~ x10d

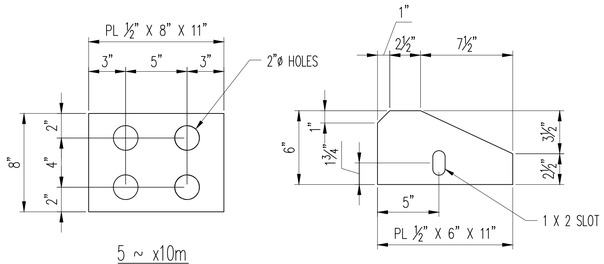

5 ~ x10m

5 ~ x10n

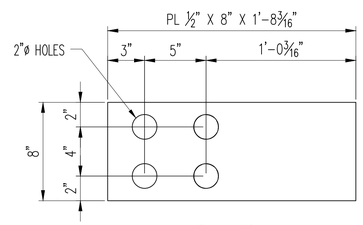

5 ~ x10p

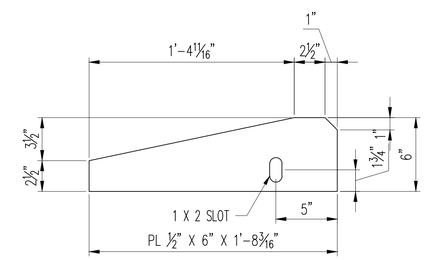

5 ~ x10r

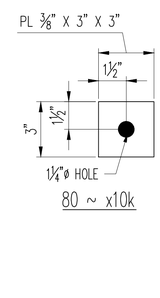

80 ~ x10k

REV.	DATE	REMARKS	DWN	CHK	APVL	SHOP

MATERIAL:	SURFACE PREP. & PAINT:	HOLES:	SHOP BOLTS:
M270M-250 U.N.O.	GALV. - PER STD. 726.08	AS NOTED	AS NOTED

DESCRIPTION: EXPANION JOINT - DETAILS

CASCO BAY STEEL STRUCTURES, INC.
1 WALLACE AVE. PHONE (207) 780-6722
SOUTH PORTLAND, ME 04106 FAX. (207) 780-6726

STRUCTURE:	BRIDGE NO. 177 VT 100 OVER MAD RIVER STATE OF VERMONT AGENCY OF TRANS.	DRAWN: SLB	DATE: 03/02/16
		CHKD: JEB	DATE: 03/02/16
LOCATION:	WAITSFIELD, VT	JOB NO.	DWG NO.
PROJ NO.	BRF 013-4(39)	651	X10
CUSTOMER:	A.L. ST. ONGE CONTRACTOR, INC.		REV. 0

3/3/2016 8:52:43 AM, FOR APPROVAL - JB DETAILING

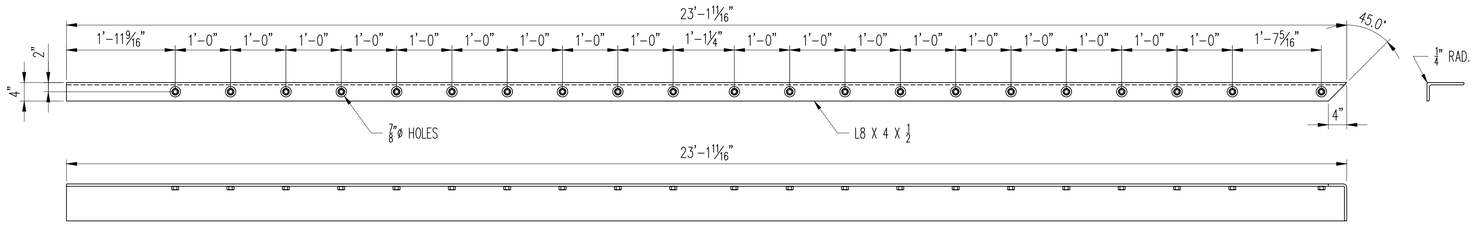

1 ~ x11a

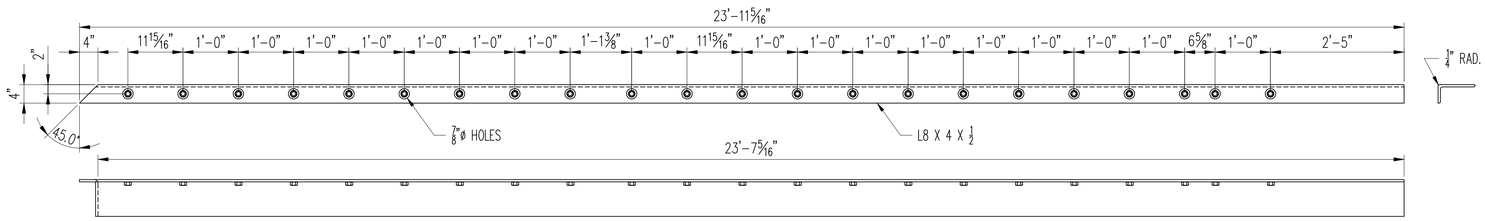

1 ~ x11b

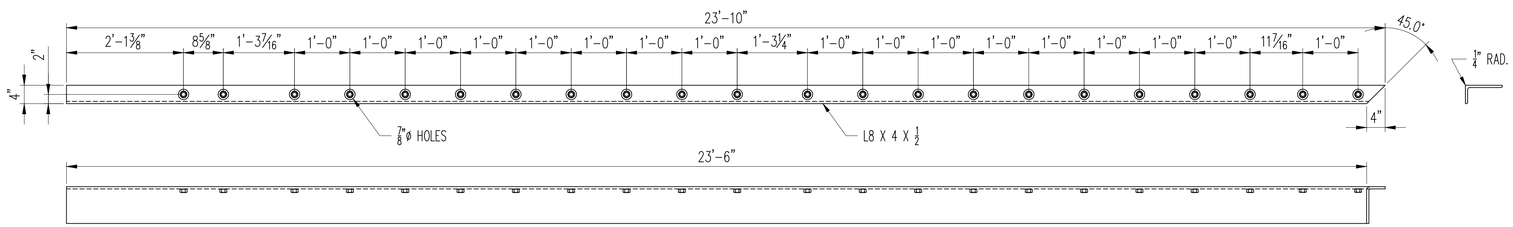

1 ~ x11c

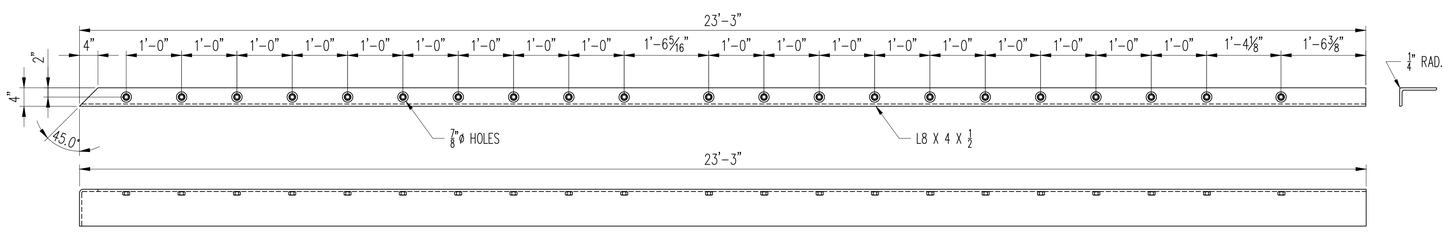

1 ~ x11d

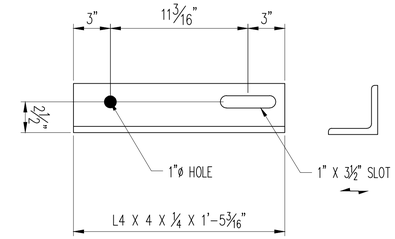

10 ~ x11b

REV.	DATE	REMARKS	DWN	CHK	APVL	SHOP

MATERIAL:	SURFACE PREP. & PAINT:	HOLES:	SHOP BOLTS:
M270M-250 U.N.O.	GALV. - PER STD. 726.08	AS NOTED	AS NOTED

DESCRIPTION: EXPANION JOINT - DETAILS

CASCO BAY STEEL STRUCTURES, INC.
1 WALLACE AVE. PHONE (207) 780-6722
SOUTH PORTLAND, ME 04106 FAX. (207) 780-6726

STRUCTURE:	BRIDGE NO. 177 VT 100 OVER MAD RIVER STATE OF VERMONT AGENCY OF TRANS.	DRAWN: SLB	DATE: 03/02/16
		CHKD: JEB	DATE: 03/02/16
LOCATION:	WAITSFIELD, VT	JOB NO.	DWG NO.
PROJ NO.	BRF 013-4(39)	651	X11
CUSTOMER:	A.L. ST. ONGE CONTRACTOR, INC.		REV. 0

3/3/2016 8:52:48 AM, FOR APPROVAL - JB DETAILING

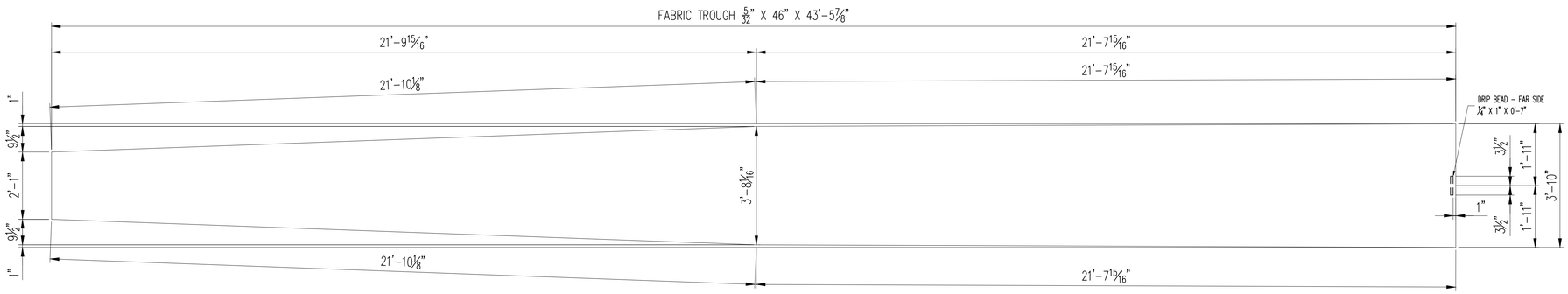

1 ~ x12a

1.) FABRIC TROUGH SHALL BE 3-PLY PREFORMED FABRIC MATERIAL CONFORMING TO SECTION 707.07 AND SHALL BE CUT PRE-ASSEMBLY FROM ONE PIECE.

2.) DRIP BEAD OF FABRIC MATERIAL SHALL BE CEMENTED TO THE BOTTOM OF THE FABRIC TROUGH.

REV.	DATE	REMARKS	DWN	CHK	APVL	SHOP

MATERIAL:	SURFACE PREP. & PAINT:	HOLES:	SHOP BOLTS:
M270M-250 U.N.O.	GALV. - PER STD. 726.08	AS NOTED	AS NOTED

DESCRIPTION: EXPANION JOINT - DETAILS

CASCO BAY STEEL STRUCTURES, INC.
1 WALLACE AVE. PHONE (207) 780-6722
SOUTH PORTLAND, ME 04106 FAX. (207) 780-6726

STRUCTURE:	BRIDGE NO. 177 VT 100 OVER MAD RIVER STATE OF VERMONT AGENCY OF TRANS.	DRAWN: SLB	DATE: 03/02/16
		CHKD: JEB	DATE: 03/02/16
LOCATION:	WAITSFIELD, VT	JOB NO.	DWG NO.
PROJ NO.	BRF 013-4(39)	651	X12
CUSTOMER:	A.L. ST. ONGE CONTRACTOR, INC.		REV. 0

3/3/2016 8:52:53 AM, FOR APPROVAL - JB DETAILING