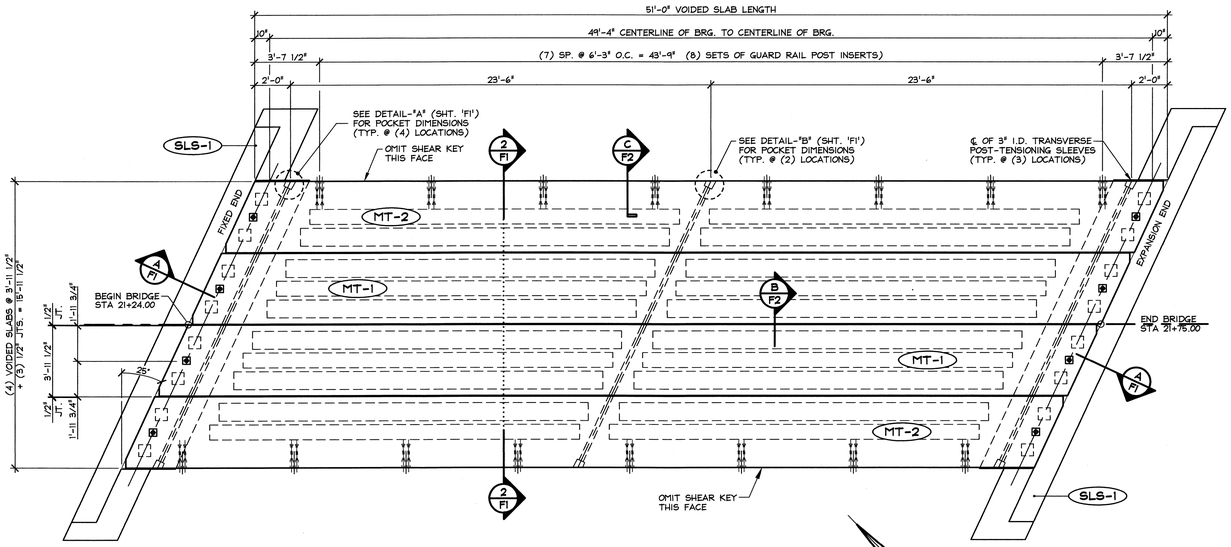

1 / F1 PRESTRESSED VOIDED SLAB LAYOUT
1/4" = 1'-0"

DESIGN LIVE LOAD: HL-93

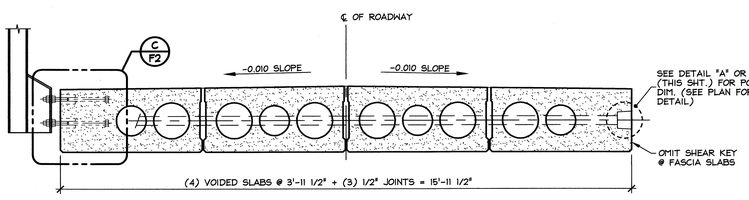

2 / F1 TRANSVERSE SECTION
1/2" = 1'-0"

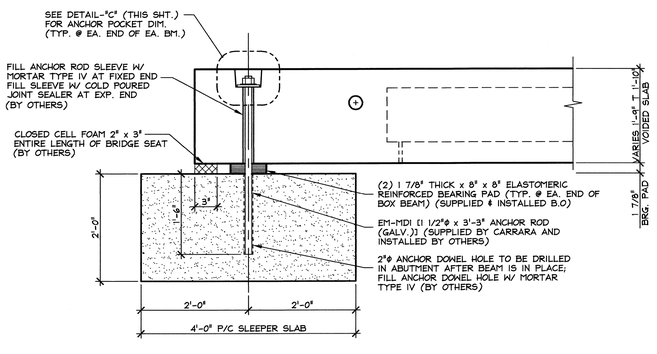

A / F1 BEARING SECTION
3/4" = 1'-0"

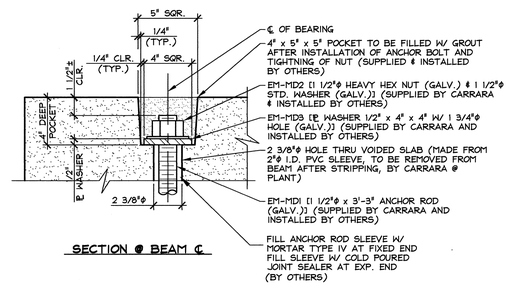

SECTION @ BEAM ℄

DETAIL - "C"
2" = 1'-0"

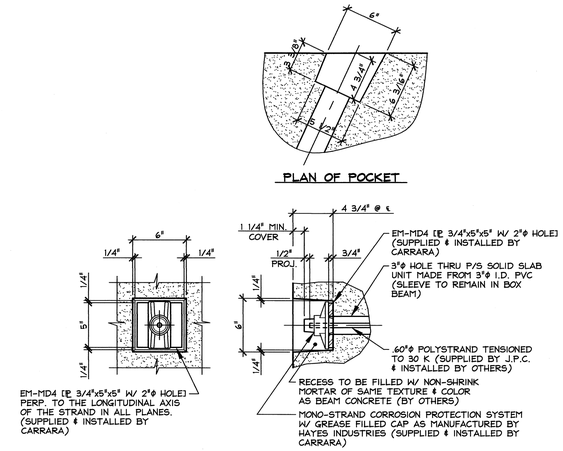

DETAIL - "A"
1 1/2" = 1'-0"

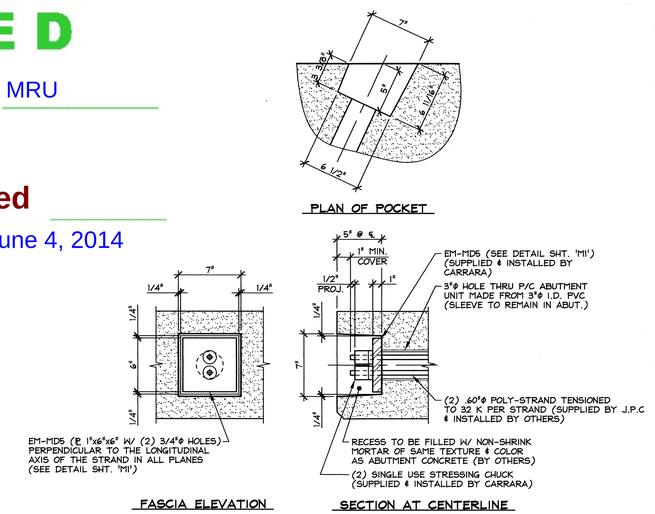

DETAIL - "B"
1 1/2" = 1'-0"

GENERAL NOTES

1. MIN. CONC. STRENGTH AT 28 DAYS SHALL BE 7,000 PSI (VOIDED SLAB)
   MIN. CONC. STRENGTH AT 28 DAYS SHALL BE 5,000 PSI (SLEEPER SLAB)
2. MIN. CONC. STRENGTH AT STRESS TRANSFER SHALL BE 5,500 PSI (V.S.)
   MIN. CONC. STRENGTH AT STRESS TRANSFER SHALL BE 3,500 PSI (SL.S.)
3. REINFORCING STEEL SHALL BE GR-60, ASTM A-615 (AASHTO M31) AND SHALL BE EPOXY COATED FOR VOIDED SLABS AND BLACK STEEL FOR SLEEPER SLABS
4. PRESTRESSING STRANDS SHALL CONFORM TO ASTM A-416 (AASHTO M203) AND SHALL CONSIST OF 0.60"ϕ x 270 KSI 7-WIRE LOW RELAXATION STRANDS.
5. PRESTRESSING STRANDS SHALL EACH BE PULLED TO HAVE A NET TENSION OF 44.0 K AFTER ACCOUNTING FOR CHUCK SLIPPAGE. TENSION SHALL BE VERIFIED BY MEASURING STRAND ELONGATION. (SEE EXAMPLE ELONGATION CALCULATION AND TENSIONING PROCEDURE, THIS SHEET.)
6. ENDS OF PRESTRESSING STRANDS SHALL BE RECESSED 3/4" AND PATCHED WITH APPROVED GROUT.
7. ALL EXPOSED CORNERS SHALL BE CHAMFERED 3/4".
8. THE TOP OF SLABS SHALL RECEIVE A LIGHT BROOM FINISH.
9. SHEAR KEY SURFACES SHALL BE SAND BLASTED CLEAN.
10. SLABS SHALL BE HANDLED AND ERECTED USING THE LIFTING EYES ONLY. THE MINIMUM SLING ANGLE FROM THE HORIZONTAL SHALL BE 60°. SLABS SHALL BE STORED AND TRANSPORTED WITH TIMBER SUPPORTS WITHIN 2'-0" OF THE BEAM ENDS, UNLESS APPROVED BY J.P. CARRARA & SONS, INC.
11. MATERIAL SPECIFICATION AND MIX DESIGN SHALL CONFORM TO VERMONT SPEC. PS10.05 FOR VOIDED SLABS AND S40.05 FOR SLEEPER SLABS RESPECTIVELY.
    DESIGN MIX: J.P.C. BRIDGE MIX #426M NO DCI (VOIDED SLAB)
    J.P.C. BRIDGE MIX #445MSCC (SLEEPER SLAB)
12. QUALITY CONTROL PROCEDURES ARE IN ACCORDANCE WITH PCI REQUIREMENTS. J.P. CARRARA & SONS, INC. IS A PCI CERTIFIED PLANT.
13. CURING METHOD: AS SOON AS THE TOP OF SLAB IS FINISHED, A COVER OF POLY AND A LAYER OF HOMOSOTE (OR BLUE BOARD) WILL BE PLACED OVER THE SLAB. THE DESIRED CURING TEMPERATURE RANGE SHALL NOT DROP BELOW 70°F. THE TEMPERATURE SHALL BE RECORDED BY AUTOMATIC SENSOR INSTRUMENTS ON GRAPH CHARTS, SPACED NOT MORE THAN 100' APART AND WILL CONTINUE UNTIL RELEASE STRENGTH IS ACHIEVED, (NATURAL CURE WITH NO EXTERNAL HEAT APPLIED). EACH CHART SHALL BE MARKED.
14. TRANSVERSE POST-TENSIONING SEQUENCE:
    A. ERECT VOIDED SLABS.
    B. POST TENSION TO 5,000 PSI
    C. GROUT SHEAR KEYS.
    D. ONCE SHEAR KEY GROUT HAS ATTAINED A MINIMUM COMPRESSIVE STRENGTH OF 1,500 PSI; POST TENSION TENDONS TO 44,000 LBS.

EXAMPLE PRESTRESSING STRAND ELONGATION CALC. AND TENSIONING

(NOT TO BE USED FOR CONSTRUCTION)

SIZE & GRADE: 0.60"ϕ x 270 KSI
AREA: 0.217 IN^2
TENSION: 44,000 LB. EACH STRANDS
GRIP-TO-GRIP: 192'-9 3/4" = 192.813'
Es = 28,600,000 PSI (ASSUMED FOR THESE CALCULATIONS; VALUE TO BE OBTAINED FOR STRAND SPOOL ACTUALLY USED)

EXAMPLE:

$$\Delta = \frac{PL}{AE} = \frac{(44{,}000 - 3{,}000) \times 192.813 \times 12}{0.217 \times 28{,}600{,}000} = 15.29"$$

THEREFORE: (TOLERANCES ± 5%)
Δ UPPER LIMIT = 1.05 x 15.29" = 16.05" = 16 1/16"
Δ LOWER LIMIT = 0.95 x 15.29" = 14.53" = 14 1/2"

EXTRA FORCE REQUIRED TO COMPENSATE FOR 1/2" CHUCK SLIPPAGE:

$$\Delta P = \frac{0.5 \times 41{,}000}{15.29} = 1{,}340 \text{ LBS.}$$

TOTAL TENSIONING FORCE = 44,000 + 1,340 = 45,340 LBS.

STRAND TENSIONING PROCEDURE:

1. PULL EACH STRAND INITIALLY TO 3,000# LBS. AND MARK STRAND.
2. THEN PULL EACH STRAND TO A TOTAL TENSION OF 45,340# LBS. AND MEASURE ELONGATION AFTER SEATING. IT MUST BE BETWEEN 14 1/2" & 16 1/16".

NOTE: FORCES READ ON STRESSING JACK GAUGES MUST BE MADE TO CORRESPOND TO ABOVE VALUES BASED ON CALIBRATION DATA FOR SPECIFIC JACK USED.

Vermont Agency of Transportation
RECEIVED
04-140508-0001 carrara.pdf
CK'D BY HIS OK'D BY MRU
May 23, 2014
RESUBMIT NO Approved
BY Carolyn Carlson DATE June 4, 2014

APPROVAL STAMP:

J.P. CARRARA & SONS INC.
Precast & Prestress Manufacturer
2464 CASE STR., MIDDLEBURY, VERMONT 05753 Phone:(802)388-6361 Fax:(802)388-9010

AL ST. ONGE CONTRACTORS, INC.
CONTRACTOR
MONTGOMERY, VERMONT

STATE OF VERMONT AGENCY OF TRANSPORTATION
COUNTY OF FRANKLIN

TOWN OF MONTGOMERY
ROUTE NO. TH 10 CLASS 3
BRIDGE NO.: 36 PROJECT NO.: BHO 1448 (27)

SUPERSTRUCTURE PLAN & SECTIONS

DATE: MARCH 10, 2014	
SCALE: NOTED	
CHKD: -	DFTM: T.D.
JOB NO: 23421-014	
DWG. NO: F1	

F:\VT-Bridges\23421-14 TH10 Montgomery\23421-F1.dwg, 5/8/2014 8:04:09 AM

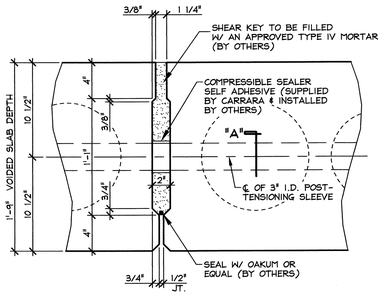

B / F2 SHEAR KEY SECTION @ P.T. SLEEVE 1 1/2" = 1'-0"

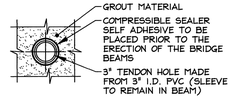

SECTION - "A"
1 1/2" = 1'-0"

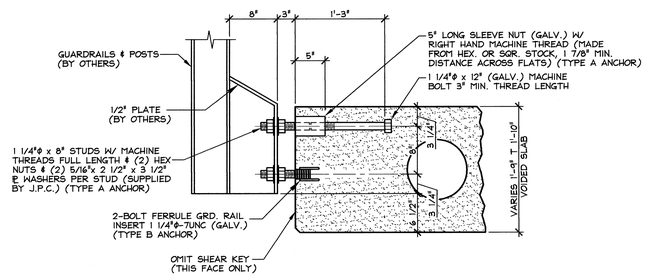

C / F2 GUARDRAIL ANCHORAGE DETAILS 1" = 1'-0"

Vermont Agency of Transportation
RECEIVED
04-140508-0001 carrara.pdf

CK'D BY HIS OK'D BY MRU

May 23, 2014

RESUBMIT NO Approved

BY Carolyn Carlson DATE June 4, 2014

APPROVAL STAMP:

J.P. CARRARA & SONS INC.
Precast & Prestress Manufacturer
2464 CASE STR., MIDDLEBURY, VERMONT 05753 Phone:(802)388-6361 Fax:(802)388-9010

AL ST. ONGE CONTRACTORS, INC.
CONTRACTOR
MONTGOMERY, VERMONT

STATE OF VERMONT AGENCY OF TRANSPORTATION
COUNTY OF FRANKLIN

TOWN OF MONTGOMERY
ROUTE NO. TH 10 CLASS 3
BRIDGE NO.: 36 PROJECT NO.: BHO 1448 (27)

SECTIONS & DETAILS

DATE: MARCH 10, 2014
SCALE: NOTED
CHKD: - DFTM: T.D.
JOB NO: 23421-014
DWG. NO: F2

F:\VT-Bridges\23421-14 TH10 Montgomery\23421-F2.dwg, 5/7/2014 7:45:58 PM

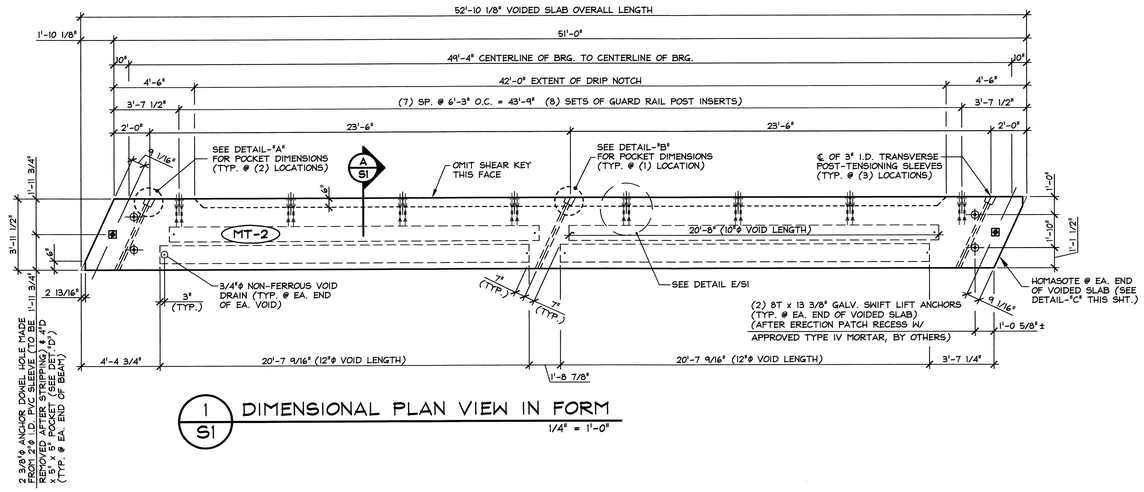

1 / S1 DIMENSIONAL PLAN VIEW IN FORM
1/4" = 1'-0"

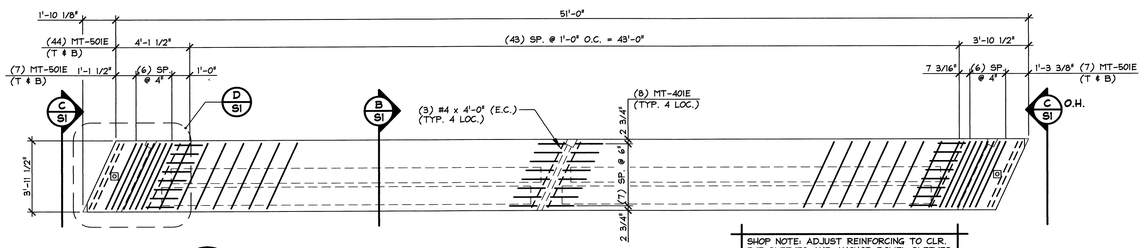

2 / S1 REINFORCING PLAN VIEW IN FORM
1/4" = 1'-0"

SHOP NOTE: ADJUST REINFORCING TO CLR. P/T SLEEVES AND ANCHOR DOWEL SLEEVES.

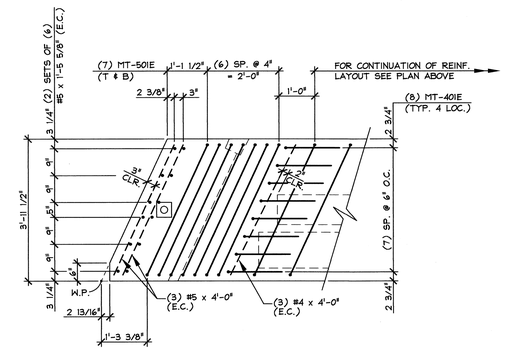

D / S1 END BLOCK REINF. PLAN
1/2" = 1'-0"

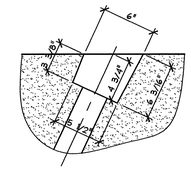

DETAIL - "A"
1 1/2" = 1'-0"

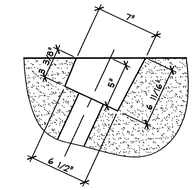

DETAIL - "B"
1 1/2" = 1'-0"

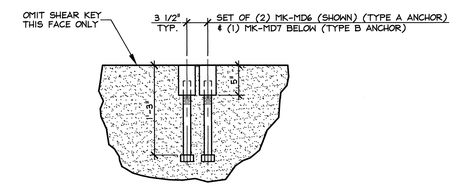

E / S1 RAIL INSERT PLAN DETAIL
1" = 1'-0"

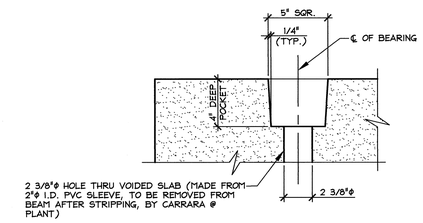

SECTION @ BEAM ℄

DETAIL - "D"
2" = 1'-0"

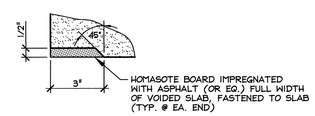

DETAIL - "C"
3" = 1'-0"

MARK: MT-2	QTY.: 2	WT.: 22.37 T	VOL.: 11.05 cy

MATERIAL LIST / SLAB

ITEM	MARK	DESCRIPTION	QTY./SLAB MT-2	
1				
2	MT-401E	#4 BENT BAR (LEVEL 1 EPOXY COATED)	32	
3	MT-501E	#5 BENT BAR (LEVEL 1 EPOXY COATED)	116	
4				
5				
6				
7				
8				
9		#4 x 4'-0" (LEVEL 1 EPOXY COATED)	12	
10		#5 x 4'-0" (LEVEL 1 EPOXY COATED)	24	
11				
12				
13				
14				
15		12"φ x 20'-7 9/16" VOID	2	
16		10"φ x 20'-8" VOID	2	
17				
18	MK-MD6	5" LG. SLV. NUT & 1 1/4"φ x 12" MACHINE BOLT (GALV.)	16	
19	MK-MD7	2-BOLT FERRULE GRD. RAIL INS. 1 1/4"φ-7UNC (GALV.)	8	
20		8T x 13 3/8" SWIFT LIFT ANCHORS (GALV.)	4	

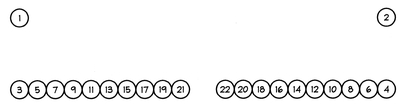

DETENSIONING SCHEDULE
N.T.S.

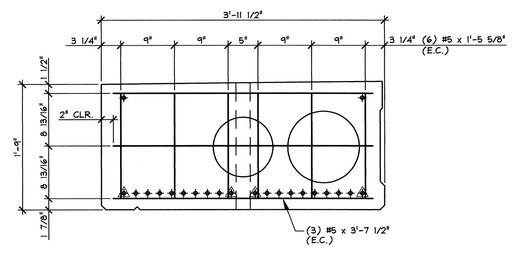

C / S1 END BLOCK REINF. SECTION
1" = 1'-0"

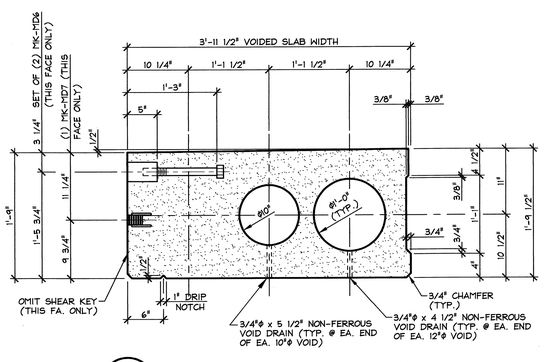

A / S1 DIMENSIONAL SECTION
1" = 1'-0"

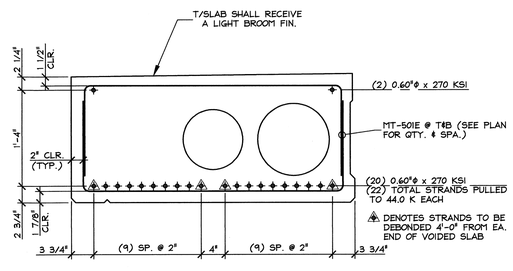

B / S1 REINFORCING SECTION
1" = 1'-0"

Vermont Agency of Transportation
RECEIVED
04-140508-0001 carrara.pdf

CK'D BY HIS OK'D BY MRU

May 23, 2014

RESUBMIT NO Approved

BY Carolyn Carlson DATE June 4, 2014

J.P. CARRARA & SONS INC.
Precast & Prestress Manufacturer
OSE STR. MIDDLEBURY, VERMONT 05753 Phone:(802)388-6361 Fax:(802)388-9010

AL ST. ONGE CONTRACTORS, INC.
CONTRACTOR
MONTGOMERY, VERMONT

STATE OF VERMONT AGENCY OF TRANSPORTATION
COUNTY OF FRANKLIN

TOWN OF MONTGOMERY
ROUTE NO. TH 10 CLASS 3
BRIDGE NO.: 36 PROJECT NO.: BHO 1448 (27)

P/S VOIDED SLAB DETAILS

DATE: MARCH 10, 2014
SCALE: NOTED
CHKD: - DFTM: T.D.
JOB NO: 23421-014
DWG. NO: S1

F:\VT-Bridges\23421-14 TH10 Montgomery\23421-S1.dwg, 5/7/2014 7:45:31 PM

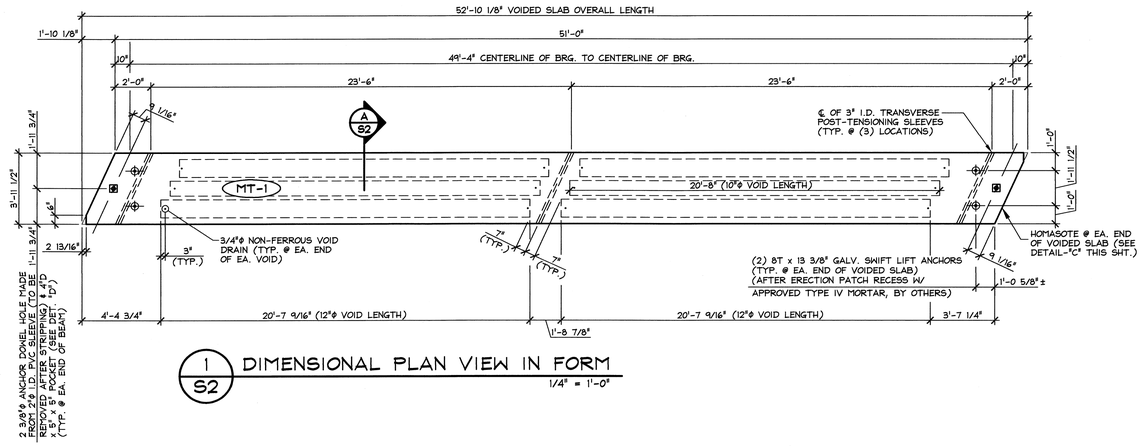

1 / S2 DIMENSIONAL PLAN VIEW IN FORM
1/4" = 1'-0"

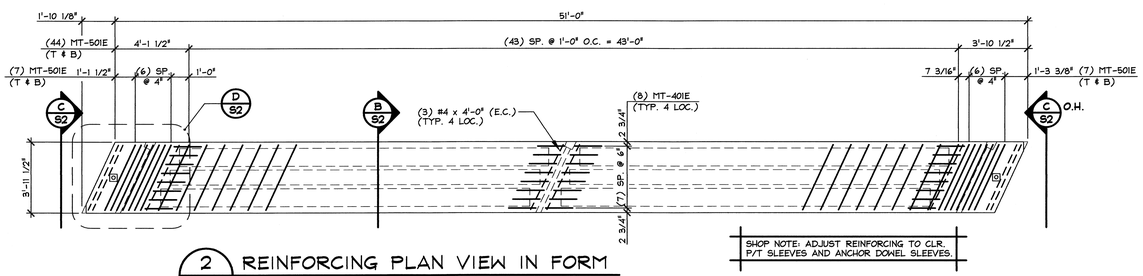

2 / S2 REINFORCING PLAN VIEW IN FORM
1/4" = 1'-0"

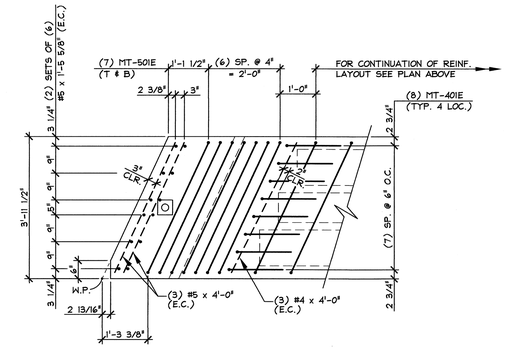

D / S2 END BLOCK REINF. PLAN
1/2" = 1'-0"

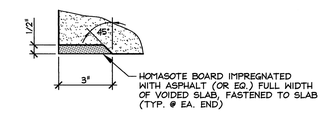

DETAIL - "C"
3" = 1'-0"

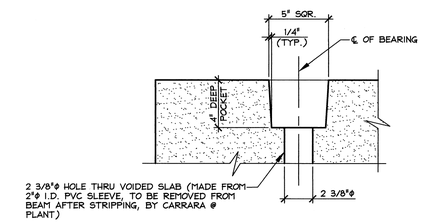

SECTION @ BEAM ℄

DETAIL - "D"
2" = 1'-0"

Vermont Agency of Transportation
RECEIVED
04-140508-0001 carrara.pdf

CK'D BY HIS OK'D BY MRU

May 23, 2014

RESUBMIT NO Approved

BY Carolyn Carlson DATE June 4, 2014

MARK: MT-1	QTY.: 2	WT.: 19.94 T	VOL.: 9.85 cy

MATERIAL LIST / SLAB

ITEM	MARK	DESCRIPTION	QTY./SLAB MT-1	
1				
2	MT-401E	#4 BENT BAR (LEVEL 1 EPOXY COATED)	32	
3	MT-501E	#5 BENT BAR (LEVEL 1 EPOXY COATED)	116	
4				
5				
6				
7				
8				
9		#4 x 4'-0" (LEVEL 1 EPOXY COATED)	12	
10		#5 x 4'-0" (LEVEL 1 EPOXY COATED)	24	
11				
12				
13				
14				
15				
16				
17		12"ϕ x 20'-7 9/16" VOID	4	
18		10"ϕ x 20'-8" VOID	2	
19				
20		8T x 13 3/8" SWIFT LIFT ANCHORS (GALV.)	4	

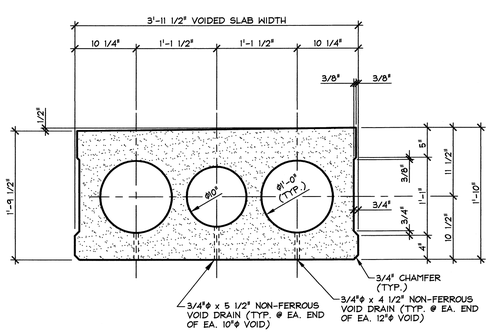

A / S2 DIMENSIONAL SECTION
1" = 1'-0"

DETENSIONING SCHEDULE
N.T.S.

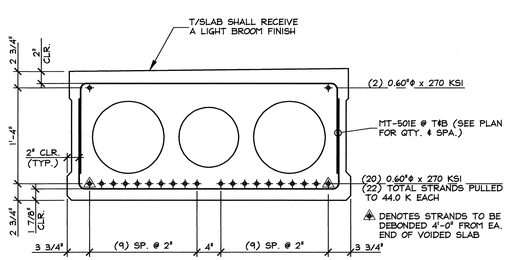

B / S2 REINFORCING SECTION
1" = 1'-0"

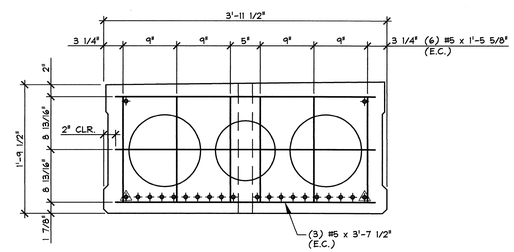

C / S2 END BLOCK REINF. SECTION
1" = 1'-0"

APPROVAL STAMP:

J.P. CARRARA & SONS INC.
Precast & Prestress Manufacturer
2464 CASE STR., MIDDLEBURY, VERMONT 05753 Phone:(802)388-6361 Fax:(802)388-9010

AL ST. ONGE CONTRACTORS, INC.
CONTRACTOR
MONTGOMERY, VERMONT

STATE OF VERMONT AGENCY OF TRANSPORTATION
COUNTY OF FRANKLIN

DATE: MARCH 10, 2014
SCALE: NOTED

TOWN OF MONTGOMERY
ROUTE NO. TH 10 CLASS 3
BRIDGE NO.: 36 PROJECT NO.: BHO 1448 (27)

CHKD: - DFTM: T.D.
JOB NO: 23421-014

P/S VOIDED SLAB DETAILS

DWG. NO: S2

F:\VT-Bridges\23421-14 TH10 Montgomery\23421-S2.dwg, 5/7/2014 7:45:10 PM

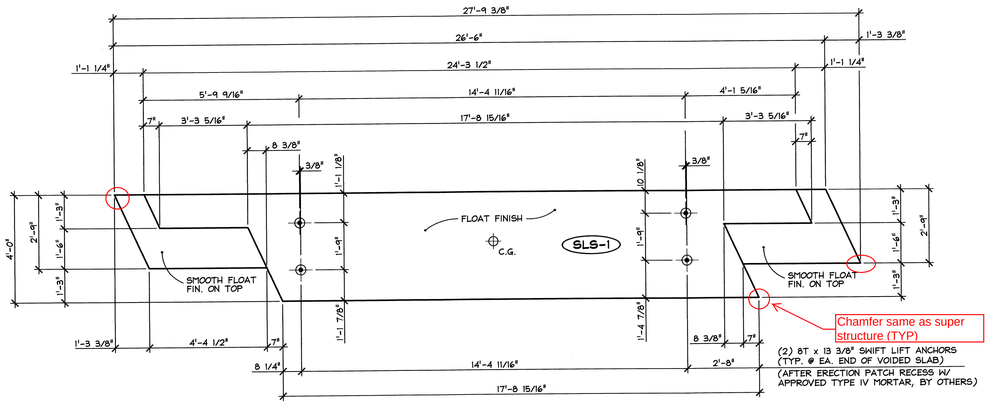

1 / SL-1 PRECAST SLEEPER SLAB PLAN VIEW IN FORM
3/8" = 1'-0"

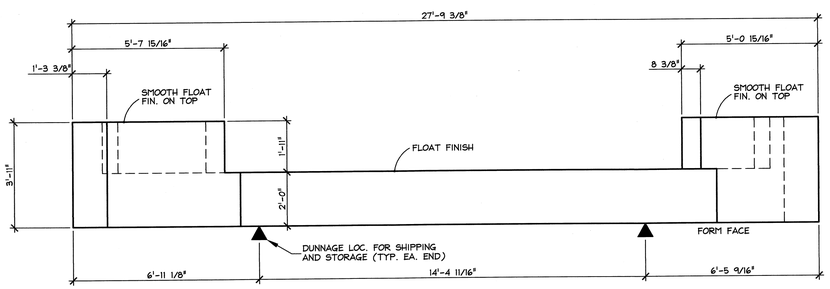

2 / SL-1 PRECAST SLEEPER SLAB ELEV. VIEW IN FORM
3/8" = 1'-0"

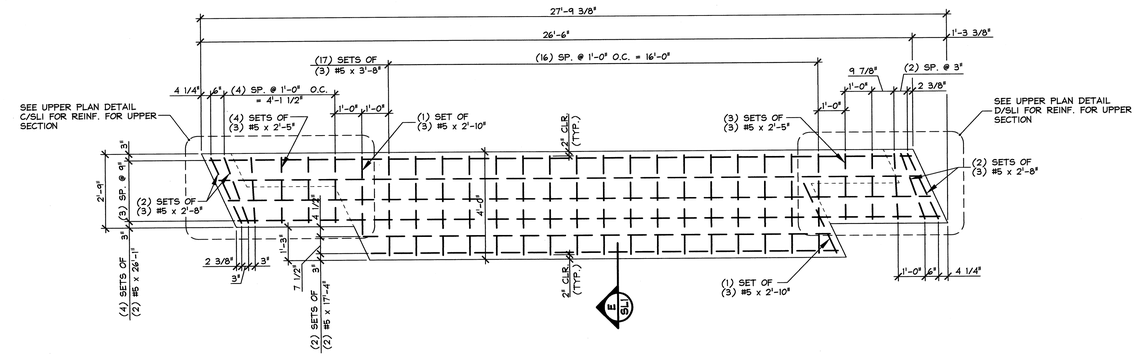

3 / SL-1 REINFORCING PLAN VIEW IN FORM (SLEEPER SLAB BASE)
3/8" = 1'-0"

Vermont Agency of Transportation
RECEIVED
04-140508-0001 carrara.pdf
CK'D BY HIS OK'D BY MRU
May 23, 2014
RESUBMIT NO Approved AsNoted
BY Carolyn Carlson DATE June 4, 2014

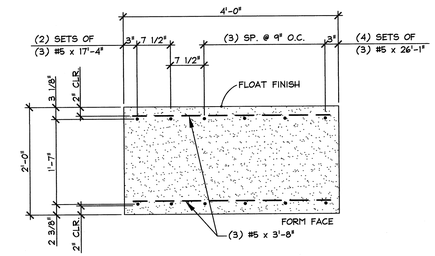

E / SL1 REINF. SECTION
3/4" = 1'-0"

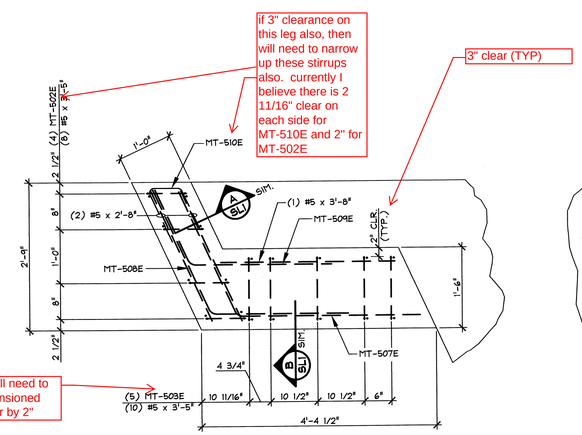

C / SL1 REINF. PLAN DETAIL
3/4" = 1'-0"

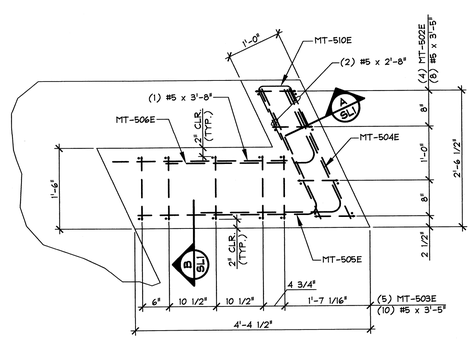

D / SL1 REINF. PLAN DETAIL
3/4" = 1'-0"

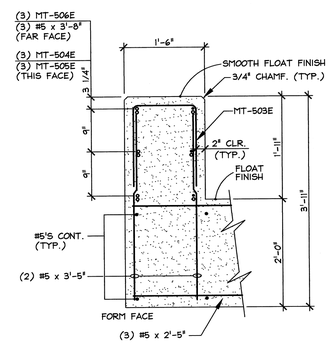

B / SL1 REINF. SECTION
3/4" = 1'-0"

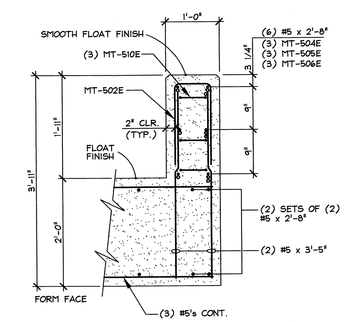

A / SL1 REINF. SECTION
3/4" = 1'-0"

MARK: SLS-1	QTY.: 2	WT.: 16.54 T	VOL.: 8.16 cy

MATERIAL LIST / SLAB

ITEM	MARK	DESCRIPTION	QTY./SLAB SLS-1	
1		8T x 13 3/8" DAYTON SWIFT LIFT	4	
2				
3	MT-502E	#5 BENT BAR (BLACK)	8	
4	MT-503E	#5 BENT BAR (BLACK)	10	
5	MT-504E	#5 BENT BAR (BLACK)	3	
6	MT-505E	#5 BENT BAR (BLACK)	3	
7	MT-506E	#5 BENT BAR (BLACK)	3	
8	MT-507E	#5 BENT BAR (BLACK)	3	
9	MT-508E	#5 BENT BAR (BLACK)	3	
10	MT-509E	#5 BENT BAR (BLACK)	3	
11	MT-510E	#5 BENT BAR (BLACK)	6	
12				
13		#5 x 2'-5" (BLACK)	21	
14		#5 x 2'-8" (BLACK)	24	
15		#5 x 2'-10" (BLACK)	6	
16		#5 x 3'-5" (BLACK)	36	
17		#5 x 3'-8" (BLACK)	57	
18		#5 x 17'-4" (BLACK)	4	
19		#5 x 26'-1" (BLACK)	8	
20				

APPROVAL STAMP:

J.P. CARRARA & SONS INC.
Precast & Prestress Manufacturer
2464 CASE STR., MIDDLEBURY, VERMONT 05753 Phone:(802)388-6361 Fax:(802)388-9010

AL ST. ONGE CONTRACTORS, INC.
CONTRACTOR
MONTGOMERY, VERMONT

STATE OF VERMONT AGENCY OF TRANSPORTATION
COUNTY OF FRANKLIN

TOWN OF MONTGOMERY
ROUTE NO. TH 10 CLASS 3
BRIDGE NO.: 36 PROJECT NO.: BHO 1448 (27)

P/C SLEEPER SLAB DETAILS

DATE: MARCH 10, 2014
SCALE: NOTED
CHKD: - DFTM: T.D.
JOB NO: 23421-014
DWG. NO: SL1

F:\VT-Bridges\23421-14 TH10 Montgomery\23421-SL1.dwg, 5/7/2014 7:44:44 PM

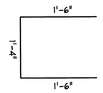

MT-401E
#4 BENT BAR
(EPOXY COATED)
(128) REQ'D.

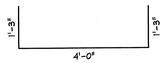

M-501E
#5 BENT BAR
(EPOXY COATED)
(464) REQ'D.

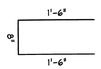

MT-502E
#5 BENT BAR
(BLACK)
(16) REQ'D.

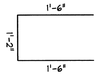

MT-503E
#5 BENT BAR
(BLACK)
(20) REQ'D.

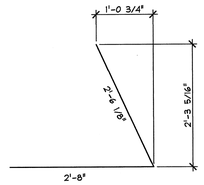

MT-504E
#5 BENT BAR
(BLACK)
(6) REQ'D.

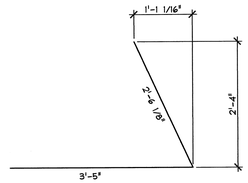

MT-505E
#5 BENT BAR
(BLACK)
(6) REQ'D.

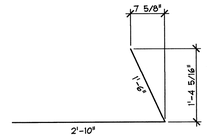

MT-506E
#5 BENT BAR
(BLACK)
(6) REQ'D.

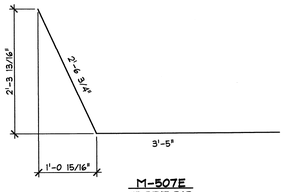

M-507E
#5 BENT BAR
(BLACK)
(6) REQ'D.

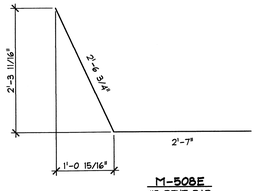

M-508E
#5 BENT BAR
(BLACK)
(6) REQ'D.

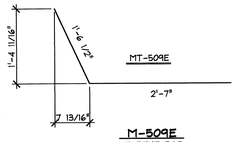

M-509E
#5 BENT BAR
(BLACK)
(6) REQ'D.

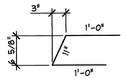

M-510E
#5 BENT BAR
(BLACK)
(12) REQ'D.

MISCELLANEOUS MATERIALS

ITEM	MARK	QTY.	DESCRIPTION	REMARKS
1	EM-MD1	8	1 1/2"ϕ x 3'-8 1/2" ANCHOR DOWEL ROD (GALV.)	FOR ERECTION; SEE DETAIL THIS SHEET
2	EM-MD2	8	1 1/2"ϕ HEAVY HEX NUT (GALV.) & 1 1/2" STD. WASHER (GALV.)	FOR ERECTION; SEE DETAIL THIS SHEET
3	EM-MD3	8	ℙ WASHER 1/2" x 5" x 5" W/ 1 3/4"ϕ HOLE (GALV.)	FOR ERECTION; SEE DETAIL THIS SHEET
4	EM-MD4	4	ℙ 3/4" x 5" x 5" W/ (1) 2"ϕ HOLE (GALV.)	FOR ERECTION, SEE DETAIL THIS SHEET
5	EM-MD5	2	ℙ 1" x 6" x 6" W/ (2) 3/4"ϕ HOLE (GALV.)	FOR ERECTION, SEE DETAIL THIS SHEET
6		4	SINGLE USE STRESSING CHUCK	FOR ERECTION
7		4	MONO-STRAND CORROSION PROTECTION SYSTEM W/ GREASE FILLED CAP	FOR ERECTION
8		4	1/2"ϕ x 20'-6" POLYSTRAND	FOR ERECTION
9				
10	MK-MD6	32	5" LG. SLV. NUT & 1 1/4"ϕ x 12" MACHINE BOLT (GALV.) (TYPE A ANCHOR)	
11	MK-MD7	16	2-BOLT FERRULE GRD. RAIL INS. 1 1/4"ϕ-7UNC (GALV.) (TYPE B ANCHOR)	
12				
13		42	#5 x 2'-5" (BLACK)	SLEEPER SLAB
14		48	#5 x 2'-8" (BLACK)	SLEEPER SLAB
15		12	#5 x 2'-10" (BLACK)	SLEEPER SLAB
16		72	#5 x 3'-5" (BLACK)	SLEEPER SLAB
17		12	#5 x 3'-8" (BLACK)	SLEEPER SLAB
18		102	#5 x 4'-11" (BLACK)	SLEEPER SLAB
19		18	#5 x 17'-4" (BLACK)	SLEEPER SLAB
20		24	#5 x 26'-1" (BLACK)	SLEEPER SLAB
21				
22		48	#4 x 4'-0" (EPOXY COATED)	VOIDED SLAB
23		96	#5 x 4'-0" (EPOXY COATED)	VOIDED SLAB
24				
25				
26				
27				
28				
29				
30		24	3/4"ϕ x 4 1/2" NON-FERROUS VOID DRAIN	
31		16	3/4"ϕ x 5 1/2" NON-FERROUS VOID DRAIN	
32				
33		12	12"ϕ x 21'-11 3/4" VOID	
34		8	10"ϕ x 22'-0 1/4" VOID	
35		24	8T x 13 3/8" DAYTON SWIFT LIFT	

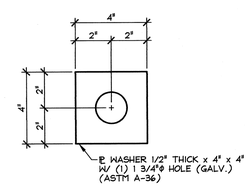

E M - M D 3
3" = 1'-0"

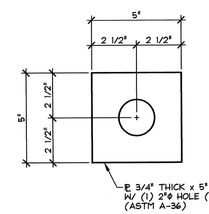

E M - M D 4
3" = 1'-0"

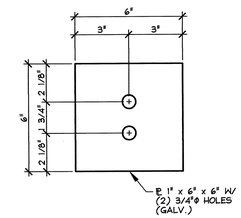

E M - M D 5
3" = 1'-0"

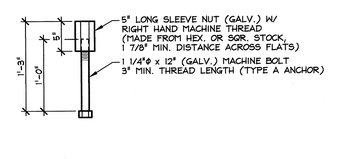

E M - M D 6
1" = 1'-0"

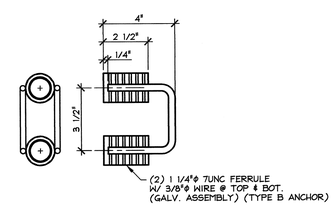

E M - M D 7
3" = 1'-0"

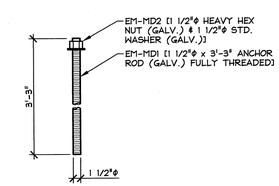

ANCHOR ROD & NUT
1" = 1'-0"

Vermont Agency of Transportation
RECEIVED
04-140508-0001 carrara.pdf

CK'D BY HIS OK'D BY MRU

May 23, 2014

RESUBMIT NO Approved

BY Carolyn Carlson DATE June 4, 2014

APPROVAL STAMP:

J.P. CARRARA & SONS INC.
Precast & Prestress Manufacturer
2464 CASE STR., MIDDLEBURY, VERMONT 05753 Phone:(802)388-6361 Fax:(802)388-9010

AL ST. ONGE CONTRACTORS, INC.
CONTRACTOR
MONTGOMERY, VERMONT

STATE OF VERMONT AGENCY OF TRANSPORTATION
COUNTY OF FRANKLIN

TOWN OF MONTGOMERY
ROUTE NO. TH 10 CLASS 3
BRIDGE NO.: 36 PROJECT NO.: BHO 1448 (27)

MATERIAL LIST

DATE: MARCH 10, 2014
SCALE: NOTED
CHKD: - DFTM: T.D.
JOB NO: 23421-014
DWG. NO: M1

F:\VT-Bridges\23421-14 TH10 Montgomery\23421-M1.dwg, 5/7/2014 7:44:12 PM