HARD-BITE POINT

HP 77600-B, HP 77600-B-18#
HP 77600-B-30#, HP 77600-B-46#

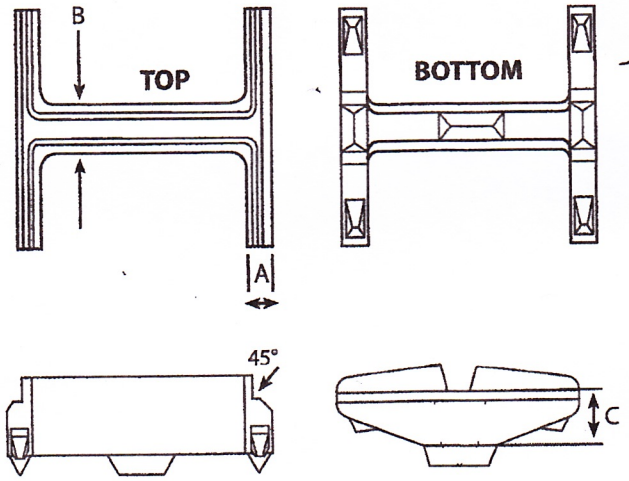

H-PILE POINT MODEL	A	B	C
14" HP			
77600-B	1"	1-1/4"	2-3/4"
77600-B-46#	1-1/2"	1-3/4"	3"
77750-B	1"	1"	4"
12" HP			
77600-B-30#	1"	1-5/16"	3"
77750-B	3/4"	3/4"	3-1/2"
7780-B	3/4"	3/4"	3"
10" HP			
77600-B	1"	1"	2-1/16"
77600-B-18#	1"	1-1/8"	2-3/8"
77750-B	3/4"	3/4"	3"
8" HP			
77600-B	1-1/16"	1"	1-7/16"

Installation Instructions

1.) Fit point onto the end of a square cut pile end.

2.) Weld point to the pile in either flat or vertical position using E70XX electrodes.

3.) Weld across full width of flange following chart below for minimum size weld.

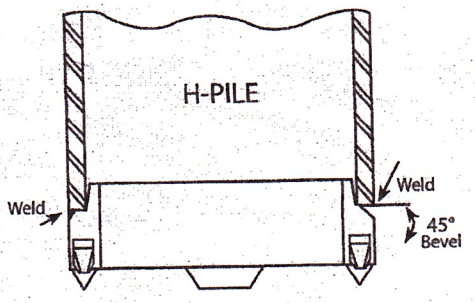

H-PILE SIZE	FLANGE THICKNESS	MINIMUM SIZE GROOVE WELD
HP 14		
x 117	.805	7/16
x 102	.705	3/8
x 89	.615	3/8
x 73	.505	5/16
HP 12		
x 84	.685	3/8
x 74	.610	3/8

H-PILE SIZE	FLANGE THICKNESS	MINIMUM SIZE GROOVE WELD
HP 12		
x 63	.515	5/16
x 53	.435	5/16
HP 10		
x 57	.565	5/16
x 42	.420	5/16
HP 8		
x 36	.445	5/16

All calculations and information should be double-checked by a qualified engineer.