Erection Plan Support Calculations
BRF-030-2(26)

Johnson, Vermont

CEE 38-mi-15

Prepared for:
A.L. St Onge Contractor, Inc

By:
Calderwood Engineering
May 27th, 2015

Rev 1: May 27th, 2015
Two different cranes used. Entire package revised.

CALDERWOOD ENGINEERING
222 RIVER ROAD
RICHMOND, ME 04357
PH. (207) 737-2007 FAX (207) 737-2008

Johnson, Vermont
Erection Plan

Calculations by: TEPA
Checked by: GM

VT 15 Bridge 32
Fairfield BRF 030-2(26)

Location:
Town of Johnson in Lamoille County on VT 15 over the Smith Brook.
Approximately 1.75 miles easterly of the Cambridge/Johnson town line.

References:
-Standard Specifications for Highway Bridges (SSHB)
-Manual of Steel Construction: Allowable Stress Design, Ninth Ed. (ASD)
-National Design Specifications for Wood Construction (NDS)

Check crane mat capacity for HL150 loaded at max radius
Use crane mats to distrubte load
Assume (3) 4'x20'x1' crane mats stacked
Place crane mats on fill

Most Loaded outrigger: $P := 114\ kip$ from BeamBoy, conservative

$D := 3\ ft$

$B := 4\ ft$

$L := 20\ ft$

$\gamma_{wood} := 50\ pcf$ dense hardwood

$P_{dead} := D \cdot B \cdot L \cdot \gamma_{wood} = 12\ kip$

$$w := \frac{(P + P_{dead})}{(L \cdot B)} = 1.575\ ksf$$

$w_{allow} := 5\ ksf$ from Table 4.11.4.1.4-1, SSHB

From available Borings: Soils are sands, gravel, with fines. If unacceptable soils present at crane mat positions, excavate 5 feet, fill, and compact with coarse fill.

$$FS := \frac{w_{allow}}{w} = 3.175$$

$check = \text{“Okay for construction”}$

If excavated down to clayey silt layer (10 foot depth according to B-1), fill a bearing platform for crane mat with coarse fill and compact.

CALDERWOOD ENGINEERING
222 RIVER ROAD
RICHMOND, ME 04357
PH. (207) 737-2007 FAX (207) 737-2008

Now check crane mat moment capacity:

-Model as a canteliever support @ center of crane mat
-Analyze on a per foot basis

$$M_B := w \cdot \frac{L}{2} \cdot \frac{\left(\frac{L}{2}\right)}{2} \cdot 1\ ft = 945\ in \cdot kip$$

Calculate capacity:

$F_b := 1150\ psi$ Mixed oak No. 1, NDS
$C_D := 1.25$ for construction loads
$C_M := 1.0$
$C_t := 1.0$
$C_L := 1.0$
$C_V := 1.0$
$C_r := 1.0$
$F'_b := F_b \cdot C_D \cdot C_M \cdot C_t \cdot C_L \cdot C_V \cdot C_r$ Table 4.3.1, NDS
$B := 1\ ft$
$H := 1\ ft$

$S_x := 3 \cdot \frac{B \cdot H^2}{6}$ (3) mats stacked on top of each other.

$M_y := S_x \cdot F'_b$

$M_y = \left(1.242 \cdot 10^3\right)\ in \cdot kip$

$$FS := \frac{M_y}{M_B} = 1.314$$

$check =$ "Okay for construction"

CALDERWOOD ENGINEERING
222 RIVER ROAD
RICHMOND, ME 04357
PH. (207) 737-2007 FAX (207) 737-2008

Check crane mat capacity for P&H 780 loaded at max radius

Use crane mats to distrubte load
Assume (2) 4'x20'x1' crane mats stacked
Place crane mats on fill
Say: Outriggers take 50% deadload and 100% boom load

Most Loaded outrigger: $P := 92.8\ kip$ from BeamBoy, conservative

$D := 2\ ft$

$B := 4\ ft$

$L := 20\ ft$

$\gamma_{wood} := 50\ pcf$ dense hardwood

$P_{dead} := D \cdot B \cdot L \cdot \gamma_{wood} = 8\ kip$

$$w := \frac{(P + P_{dead})}{(L \cdot B)} = 1.26\ ksf$$

$w_{allow} := 5\ ksf$ from Table 4.11.4.1.4-1, SSHB

From available Borings: Soils are sands, gravel, with fines. If unacceptable soils present at crane mat positions, excavate 5 feet, fill, and compact with coarse fill.

$$FS := \frac{w_{allow}}{w} = 3.968$$

$check =$ "Okay for construction"

If excavated down to clayey silt layer (10 foot depth according to B-1), fill a bearing platform for crane mat with coarse fill and compact.

CALDERWOOD ENGINEERING
222 RIVER ROAD
RICHMOND, ME 04357
PH. (207) 737-2007 FAX (207) 737-2008

Now check crane mat moment capacity:

-Model as a canteliever support @ center of crane mat
-Analyze on a per foot basis

$$M_B := w \cdot \frac{L}{2} \cdot \frac{\left(\frac{L}{2}\right)}{2} \cdot 1\ ft = 756\ in \cdot kip$$

Calculate capacity:

$F_b := 1150\ psi$ Mixed oak No. 1, NDS
$C_D := 1.25$ for construction loads
$C_M := 1.0$
$C_t := 1.0$
$C_L := 1.0$
$C_V := 1.0$
$C_r := 1.0$
$F'_b := F_b \cdot C_D \cdot C_M \cdot C_t \cdot C_L \cdot C_V \cdot C_r$ Table 4.3.1, NDS
$B := 1\ ft$
$H := 1\ ft$

$S_x := 2 \cdot \frac{B \cdot H^2}{6}$ (2) mats stacked on top of each other.

$M_y := S_x \cdot F'_b$

$M_y = 828\ in \cdot kip$

$FS := \frac{M_y}{M_B} = 1.095$ $check =$ "Okay for construction"

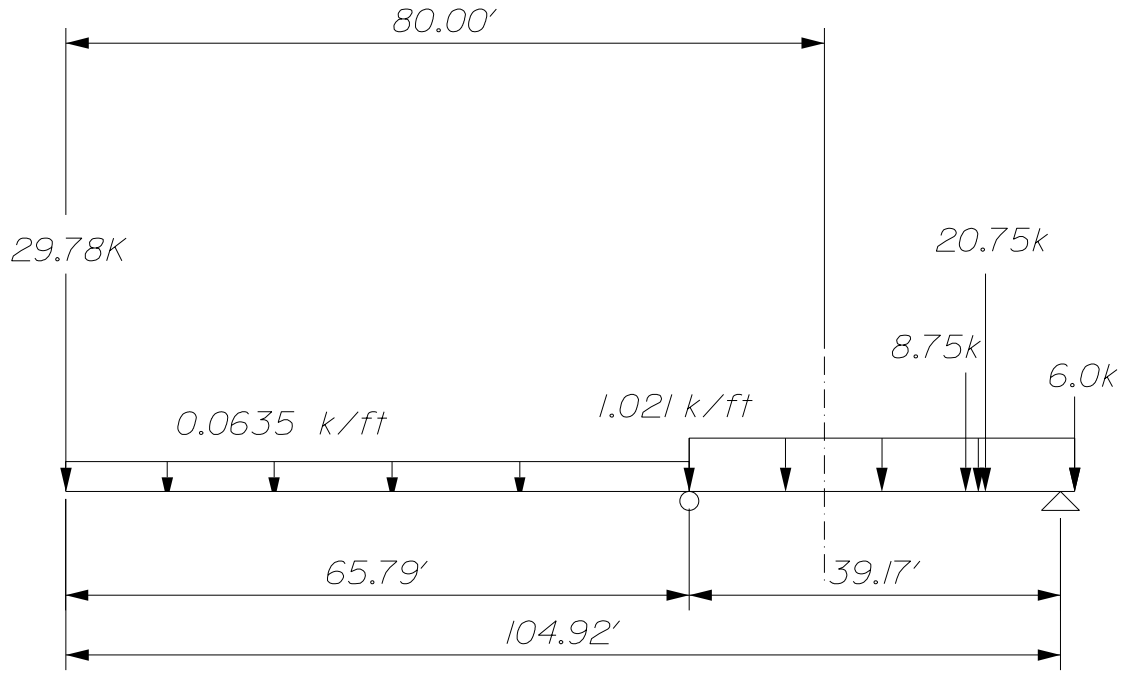

HL-150 LOADING

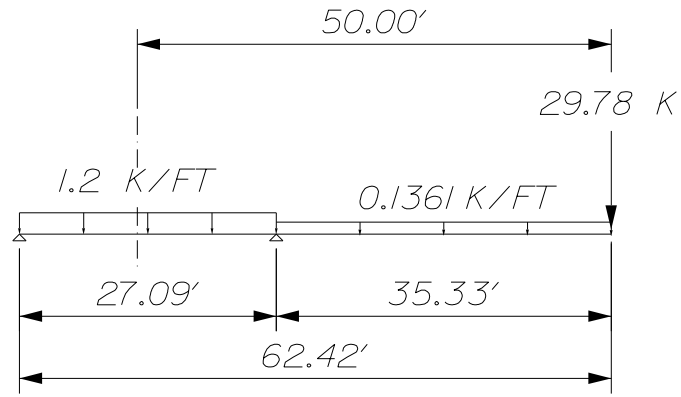

P&H 780 LOADING

BEAMBOY V2.2 REPORT

HL-150 Crane Support Reations

LOAD CONFIGURATION

Point Loads

29800 lb., x=0 ft.
8750 lb., x=94.9 ft.
20800 lb., x=97 ft.
6000 lb., x=105 ft.

Distributed Loads

Start=63.5 lb./ft., x=0 ft.; End=63.5 lb./ft., x=65.8 ft.
Start=1020 lb./ft., x=65.8 ft.; End=1020 lb./ft., x=105 ft.

Moments

Supports

Simple support; 65.8 ft., Reaction=114000 lb.
Simple support; 105 ft., Reaction=-4590 lb.

5/27/2015

BEAMBOY V2.2 REPORT

P&H Support Reactions

LOAD CONFIGURATION

Point Loads

29800 lb., x=62.4 ft.

Distributed Loads

Start=1200 lb./ft., x=0 ft.; End=1200 lb./ft., x=27.1 ft.
Start=136 lb./ft., x=27.1 ft.; End=136 lb./ft., x=62.4 ft.

Moments

Supports

Simple support; 0 ft.
Simple support; 27.1 ft.

5/27/2015

STERLING CRANE

LIFTING CHARTS - Conventional Truck Cranes

GROVE MODEL HL150T - 150 TON CAPACITY

68A BOOM – ON OUTRIGGERS OVER REAR
85% STABILITY

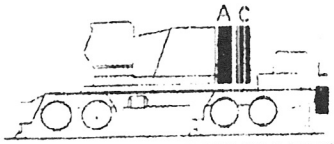

COUNTERWEIGHT CONFIGURATION

CAPACITY IN POUNDS
WITH A C + L COUNTERWEIGHTS

	BOOM LGTH	LOAD RAD	BOOM ANG	SHEAVE HGT	RATED LOAD
	50	12	81.9	57.1	300,000
	50	13	80.7	57.0	294,900
	50	14	79.6	56.8	273,400
	50	15	78.4	56.5	254,800
	50	16	77.2	56.3	238,400
	50	17	76.0	56.0	224,100
	50	18	74.8	55.7	211,300
†002	50	19	73.6	55.4	199,900
	50	20	72.4	55.1	189,500
	50	25	66.2	53.1	150,400
	50	30	59.7	50.4	124,300
	50	35	52.7	46.8	105,600
	50	40	44.9	42.2	91,600
	50	45	35.8	36.0	78,900
	50	50	23.7	26.8	68,200
	60	14	81.3	66.9	273,100
	60	15	80.3	66.8	254,500
	60	16	79.4	66.6	238,200
	60	17	78.4	66.3	223,800
	60	18	77.4	66.1	211,000
	60	19	76.4	65.8	199,600
†003	60	20	75.4	65.6	189,300
	60	25	70.4	63.9	150,100
	60	30	65.2	61.8	124,100
	60	35	59.8	59.0	105,400
	60	40	54.0	55.6	91,400
	60	45	47.7	51.4	79,000
	60	50	40.7	46.0	68,300
	60	60	21.5	28.6	53,300
	70	16	80.9	76.7	237,900
	70	17	80.1	76.6	223,600
	70	18	79.2	76.3	210,800
	70	19	78.4	76.1	199,400
	70	20	77.6	75.9	189,100
	70	25	73.3	74.5	149,900
†004	70	30	69.0	72.7	123,900
	70	35	64.5	70.4	105,300
	70	40	59.8	67.7	91,200
	70	45	54.9	64.4	79,000
	70	50	49.6	60.3	68,400
	70	60	37.5	49.4	53,500
	70	70	19.8	30.3	43,400
	80	17	81.3	86.7	223,200
	80	18	80.6	86.5	210,400
	80	19	79.9	86.3	199,000
	80	20	79.1	86.1	188,700
	80	25	75.5	84.9	149,500
	80	30	71.7	83.4	123,500
†005	80	35	67.9	81.4	104,900
	80	40	63.9	79.1	90,900
	80	45	59.8	76.3	78,900
	80	50	55.5	73.1	68,200
	80	60	46.2	64.7	53,300
	80	70	34.9	52.6	43,300
	80	80	18.4	31.9	36,200
	90	19	81.0	96.5	198,700
	90	20	80.4	96.3	188,400
	90	25	77.1	95.3	149,300
	90	30	73.8	93.9	123,300
	90	35	70.5	92.2	104,700
	90	40	67.0	90.2	90,700
†006	90	45	63.5	87.8	78,900
	90	50	59.8	85.0	68,200
	90	60	52.1	78.0	53,300
	90	70	43.4	68.7	43,400
	90	80	32.8	55.6	36,200
	90	90	17.3	33.4	30,900
	100	20	81.3	106.5	188,000
	100	25	78.4	105.5	148,900
	100	30	75.5	104.3	122,900
	100	35	72.5	102.8	104,300
	100	40	69.4	101.0	90,300
†007	100	45	66.3	98.9	78,800
	100	50	63.1	96.5	68,000
	100	60	56.5	90.5	53,100
	100	70	49.2	82.7	43,100
	100	80	41.0	72.5	36,000
	100	90	31.1	58.4	30,600
	100	100	16.4	34.8	26,500
	110	22	81.1	116.3	169,900
	110	25	79.5	115.7	148,500
	110	30	76.8	114.6	122,500
	110	35	74.1	113.3	104,000
	110	40	71.4	111.7	89,900
	110	45	68.6	109.8	78,600
†008	110	50	65.8	107.6	67,800
	110	60	59.9	102.3	52,900
	110	70	53.6	95.6	42,900
	110	80	46.7	87.1	35,800
	110	90	39.0	76.0	30,500
	110	100	29.6	61.0	26,400
	110	110	15.6	36.2	23,000
	120	24	80.9	126.1	154,600
	120	25	80.4	125.9	148,000
	120	30	77.9	124.9	122,000
	120	35	75.5	123.7	103,600
	120	40	73.0	122.2	89,500
	120	45	70.5	120.5	78,400
†009	120	50	67.9	118.5	67,600
	120	60	62.6	113.8	52,700
	120	70	57.1	107.8	42,700
	120	80	51.1	100.4	35,500
	120	90	44.6	91.2	30,200
	120	100	37.2	79.4	26,100
	120	110	28.3	63.5	22,800
	120	120	14.9	37.4	20,000
	130	25	81.1	136.1	147,600
	130	30	78.9	135.1	121,700
	130	35	76.6	134.0	103,200
	130	40	74.3	132.7	89,200
	130	45	72.0	131.1	78,200
	130	50	69.7	129.3	67,400
†010	130	60	64.9	125.0	52,500
	130	70	59.9	119.6	42,500
	130	80	54.6	113.1	35,300
	130	90	49.0	105.1	30,000
	130	100	42.8	95.2	26,000
	130	110	35.7	82.7	22,600
	130	120	27.1	65.9	19,900
	130	130	14.3	38.7	17,600
	140	27	80.9	145.9	135,800
	140	30	79.7	145.3	121,200
	140	35	77.6	144.3	102,800
	140	40	75.5	143.0	88,700
	140	45	73.4	141.6	78,000
	140	50	71.2	139.9	67,200
	140	60	66.8	136.0	52,300
†011	140	70	62.3	131.1	42,200
	140	80	57.5	125.2	35,100
	140	90	52.5	118.1	29,700
	140	100	47.1	109.4	25,700
	140	110	41.1	98.9	22,400
	140	120	34.3	85.8	19,600
	140	130	26.1	68.2	17,300
	140	140	13.7	39.8	15,400
	150	28	81.2	155.8	130,200
	150	30	80.4	155.5	120,800
	150	35	78.4	154.5	102,400
	150	40	76.5	153.4	88,400
	150	45	74.5	152.0	77,700
	150	50	72.5	150.5	66,900
	150	60	68.4	146.9	52,000
†012	150	70	64.3	142.4	42,000
	150	80	59.9	137.0	34,800
	150	90	55.4	130.5	29,400
	150	100	50.5	122.8	25,500
	150	110	45.4	113.7	22,100
	150	120	39.6	102.6	19,400
	150	130	33.1	88.8	17,100
	150	140	25.2	70.5	15,100
	150	150	13.3	41.0	13,500

68A BOOM – ON OUTRIGGERS 360°
85% STABILITY

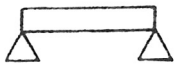

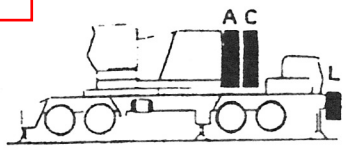

COUNTERWEIGHT CONFIGURATION

CAPACITY IN POUNDS
WITH A C + L COUNTERWEIGHTS

	BOOM LGTH	LOAD RAD	BOOM ANG	SHEAVE HGT	RATED LOAD
	50	12	81.9	57.1	300,000
	50	13	80.7	57.0	294,900
	50	14	79.6	56.8	273,400
	50	15	78.4	56.5	254,800
	50	16	77.2	56.3	238,400
	50	17	76.0	56.0	224,100
	50	18	74.8	55.7	211,300
†002	50	19	73.6	55.4	199,900
	50	20	72.4	55.1	189,500
	50	25	66.2	53.1	150,400
	50	30	59.7	50.4	124,300
	50	35	52.7	46.8	100,500
	50	40	44.9	42.2	82,300
	50	45	35.8	36.0	69,300
	50	50	23.7	26.8	59,600
	60	14	81.3	66.9	273,100
	60	15	80.3	66.8	254,500
	60	16	79.4	66.6	238,200
	60	17	78.4	66.3	223,800
	60	18	77.4	66.1	211,000
	60	19	76.4	65.8	199,600
	60	20	75.4	65.6	189,300
†003	60	25	70.4	63.9	150,100
	60	30	65.2	61.8	124,100
	60	35	59.8	59.0	100,700
	60	40	54.0	55.6	82,400
	60	45	47.7	51.4	69,400
	60	50	40.7	46.0	59,800
	60	60	21.5	28.6	46,300
	70	16	80.9	76.7	237,900
	70	17	80.1	76.6	223,600
	70	18	79.2	76.3	210,800
	70	19	78.4	76.1	199,400
	70	20	77.6	75.9	189,100
	70	25	73.3	74.5	149,900
†004	70	30	69.0	72.7	123,900
	70	35	64.5	70.4	100,800
	70	40	59.8	67.7	82,500
	70	45	54.9	64.4	69,500
	70	50	49.6	60.3	59,800
	70	60	37.5	49.4	46,400
	70	70	19.8	30.3	37,500
	80	17	81.3	86.7	223,200
	80	18	80.6	86.5	210,400
	80	19	79.9	86.3	199,000
	80	20	79.1	86.1	188,700
	80	25	75.5	84.9	149,500
	80	30	71.7	83.4	123,500
	80	35	67.9	81.4	100,800
†005	80	40	63.9	79.1	82,500
	80	45	59.8	76.3	69,400
	80	50	55.5	73.1	59,700
	80	60	46.2	64.7	46,300
	80	70	34.9	52.6	37,400
	80	80	18.4	31.9	31,000
	90	19	81.0	96.5	198,700
	90	20	80.4	96.3	188,400
	90	25	77.1	95.3	149,300
	90	30	73.8	93.9	123,300
	90	35	70.5	92.2	100,800
	90	40	67.0	90.2	82,400
†006	90	45	63.5	87.8	69,400
	90	50	59.8	85.0	59,700
	90	60	52.1	78.0	46,300
	90	70	43.4	68.7	37,400
	90	80	32.8	55.6	31,100
	90	90	17.3	33.4	26,300
	100	20	81.3	106.5	188,000
	100	25	78.4	105.5	148,900
	100	30	75.5	104.3	122,900
	100	35	72.5	102.8	100,700
	100	40	69.4	101.0	82,300
	100	45	66.3	98.9	69,300
†007	100	50	63.1	96.5	59,500
	100	60	56.5	90.5	46,200
	100	70	49.2	82.7	37,200
	100	80	41.0	72.5	30,900
	100	90	31.1	58.4	26,200
	100	100	16.4	34.8	22,400
	110	22	81.1	116.3	169,900
	110	25	79.5	115.7	148,500
	110	30	76.8	114.6	122,500
	110	35	74.1	113.3	100,600
	110	40	71.4	111.7	82,200
	110	45	68.6	109.8	69,100
	110	50	65.8	107.6	59,300
†008	110	60	59.9	102.3	46,000
	110	70	53.6	95.6	37,000
	110	80	46.7	87.1	30,700
	110	90	39.0	76.0	26,000
	110	100	29.6	61.0	22,300
	110	110	15.6	36.2	19,300
	120	24	80.9	126.1	154,600
	120	25	80.4	125.9	148,000
	120	30	77.9	124.9	122,000
	120	35	75.5	123.7	100,500
	120	40	73.0	122.2	82,000
	120	45	70.5	120.5	68,900
	120	50	67.9	118.5	59,100
†009	120	60	62.6	113.8	45,700
	120	70	57.1	107.8	36,800
	120	80	51.1	100.4	30,400
	120	90	44.6	91.2	25,800
	120	100	37.2	79.4	22,100
	120	110	28.3	63.5	19,100
	120	120	14.9	37.4	16,600
	130	25	81.1	136.1	147,600
	130	30	78.9	135.1	121,700
	130	35	76.6	134.0	100,200
	130	40	74.3	132.7	81,800
	130	45	72.0	131.1	68,700
	130	50	69.7	129.3	58,900
†010	130	60	64.9	125.0	45,500
	130	70	59.9	119.6	36,600
	130	80	54.6	113.1	30,200
	130	90	49.0	105.1	25,600
	130	100	42.8	95.2	21,900
	130	110	35.7	82.7	19,000
	130	120	27.1	65.9	16,500
	130	130	14.3	38.7	14,500
	140	27	80.9	145.9	135,800
	140	30	79.7	145.3	121,200
	140	35	77.6	144.3	100,100
	140	40	75.5	143.0	81,700
	140	45	73.4	141.6	68,500
	140	50	71.2	139.9	58,700
	140	60	66.8	136.0	45,300
†011	140	70	62.3	131.1	36,300
	140	80	57.5	125.2	29,900
	140	90	52.5	118.1	25,400
	140	100	47.1	109.4	21,700
	140	110	41.1	98.9	18,700
	140	120	34.3	85.8	16,300
	140	130	26.1	68.2	14,200
	140	140	13.7	39.8	12,500
	150	28	81.2	155.8	130,200
	150	30	80.4	155.5	120,800
	150	35	78.4	154.5	99,900
	150	40	76.5	153.4	81,500
	150	45	74.5	152.0	68,300
	150	50	72.5	150.5	58,500
	150	60	68.4	146.9	45,100
	150	70	64.3	142.4	36,100
†012	150	80	59.9	137.0	29,700
	150	90	55.4	130.5	25,100
	150	100	50.5	122.8	21,400
	150	110	45.4	113.7	18,400
	150	120	39.6	102.6	16,000
	150	130	33.1	88.8	14,000
	150	140	25.2	70.5	12,300
	150	150	13.3	41.0	10,800

RATED LOADS APPEARING IN SHADED AREAS ARE BASED ON STRUCTURAL OR OTHER FACTORS RATHER THAN STABILITY.

READ AND UNDERSTAND LIFTING CAPACITY NOTES ON A6-829-800021 LOCATED IN THE FRONT OF THIS MANUAL BEFORE OPERATING THIS MACHINE.

†LMI OPERATING CODE. REFER TO LMI MANUAL FOR OPERATING INSTRUCTIONS.

SERIAL NUMBER

HL150T
IDENTIFICATION

68A BOOM – ON OUTRIGGERS OVER REAR
85% STABILITY

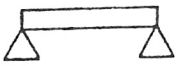

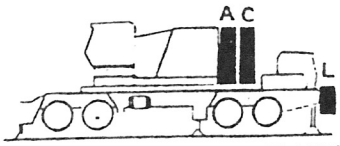

COUNTERWEIGHT CONFIGURATION

CAPACITY IN POUNDS
WITH A C + L COUNTERWEIGHTS

	BOOM LGTH	LOAD RAD	BOOM ANG	SHEAVE HGT	RATED LOAD
	50	12	81.9	57.1	300,000
	50	13	80.7	57.0	294,900
	50	14	79.6	56.8	273,400
	50	15	78.4	56.5	254,800
	50	16	77.2	56.3	238,400
	50	17	76.0	56.0	224,100
	50	18	74.8	55.7	211,300
†002	50	19	73.6	55.4	199,900
	50	20	72.4	55.1	189,500
	50	25	66.2	53.1	150,400
	50	30	59.7	50.4	124,300
	50	35	52.7	46.8	105,600
	50	40	44.9	42.2	91,600
	50	45	35.8	36.0	78,900
	50	50	23.7	26.8	68,200
	60	14	81.3	66.9	273,100
	60	15	80.3	66.8	254,500
	60	16	79.4	66.6	238,200
	60	17	78.4	66.3	223,800
	60	18	77.4	66.1	211,000
	60	19	76.4	65.8	199,600
†003	60	20	75.4	65.6	189,300
	60	25	70.4	63.9	150,100
	60	30	65.2	61.8	124,100
	60	35	59.8	59.0	105,400
	60	40	54.0	55.6	91,400
	60	45	47.7	51.4	79,000
	60	50	40.7	46.0	68,300
	60	60	21.5	28.6	53,300
	70	16	80.9	76.7	237,900
	70	17	80.1	76.6	223,600
	70	18	79.2	76.3	210,800
	70	19	78.4	76.1	199,400
	70	20	77.6	75.9	189,100
	70	25	73.3	74.5	149,900
†004	70	30	69.0	72.7	123,900
	70	35	64.5	70.4	105,300
	70	40	59.8	67.7	91,200
	70	45	54.9	64.4	79,000
	70	50	49.6	60.3	68,400
	70	60	37.5	49.4	53,500
	70	70	19.8	30.3	43,400
	80	17	81.3	86.7	223,200
	80	18	80.6	86.5	210,400
	80	19	79.9	86.3	199,000
	80	20	79.1	86.1	188,700
	80	25	75.5	84.9	149,500
	80	30	71.7	83.4	123,500
†005	80	35	67.9	81.4	104,900
	80	40	63.9	79.1	90,900
	80	45	59.8	76.3	78,900
	80	50	55.5	73.1	68,200
	80	60	46.2	64.7	53,300
	80	70	34.9	52.6	43,300
	80	80	18.4	31.9	36,200
	90	19	81.0	96.5	198,700
	90	20	80.4	96.3	188,400
	90	25	77.1	95.3	149,300
	90	30	73.8	93.9	123,300
	90	35	70.5	92.2	104,700
	90	40	67.0	90.2	90,700
†006	90	45	63.5	87.8	78,900
	90	50	59.8	85.0	68,200
	90	60	52.1	78.0	53,300
	90	70	43.4	68.7	43,400
	90	80	32.8	55.6	36,200
	90	90	17.3	33.4	30,900
	100	20	81.3	106.5	188,000
	100	25	78.4	105.5	148,900
	100	30	75.5	104.3	122,900
	100	35	72.5	102.8	104,300
	100	40	69.4	101.0	90,300
†007	100	45	66.3	98.9	78,800
	100	50	63.1	96.5	68,000
	100	60	56.5	90.5	53,100
	100	70	49.2	82.7	43,100
	100	80	41.0	72.5	36,000
	100	90	31.1	58.4	30,600
	100	100	16.4	34.8	26,500
	110	22	81.1	116.3	169,900
	110	25	79.5	115.7	148,500
	110	30	76.8	114.6	122,500
	110	35	74.1	113.3	104,000
	110	40	71.4	111.7	89,900
	110	45	68.6	109.8	78,600
†008	110	50	65.8	107.6	67,800
	110	60	59.9	102.3	52,900
	110	70	53.6	95.6	42,900
	110	80	46.7	87.1	35,800
	110	90	39.0	76.0	30,500
	110	100	29.6	61.0	26,400
	110	110	15.6	36.2	23,000
	120	24	80.9	126.1	154,600
	120	25	80.4	125.9	148,000
	120	30	77.9	124.9	122,000
	120	35	75.5	123.7	103,600
	120	40	73.0	122.2	89,500
	120	45	70.5	120.5	78,400
†009	120	50	67.9	118.5	67,600
	120	60	62.6	113.8	52,700
	120	70	57.1	107.8	42,700
	120	80	51.1	100.4	35,500
	120	90	44.6	91.2	30,200
	120	100	37.2	79.4	26,100
	120	110	28.3	63.5	22,800
	120	120	14.9	37.4	20,000
	130	25	81.1	136.1	147,600
	130	30	78.9	135.1	121,700
	130	35	76.6	134.0	103,200
	130	40	74.3	132.7	89,200
	130	45	72.0	131.1	78,200
	130	50	69.7	129.3	67,400
†010	130	60	64.9	125.0	52,500
	130	70	59.9	119.6	42,500
	130	80	54.6	113.1	35,300
	130	90	49.0	105.1	30,000
	130	100	42.8	95.2	26,000
	130	110	35.7	82.7	22,600
	130	120	27.1	65.9	19,900
	130	130	14.3	38.7	17,600
	140	27	80.9	145.9	135,800
	140	30	79.7	145.3	121,200
	140	35	77.6	144.3	102,800
	140	40	75.5	143.0	88,700
	140	45	73.4	141.6	78,000
	140	50	71.2	139.9	67,200
	140	60	66.8	136.0	52,300
†011	140	70	62.3	131.1	42,200
	140	80	57.5	125.2	35,100
	140	90	52.5	118.1	29,700
	140	100	47.1	109.4	25,700
	140	110	41.1	98.9	22,400
	140	120	34.3	85.8	19,600
	140	130	26.1	68.2	17,300
	140	140	13.7	39.8	15,400
	150	28	81.2	155.8	130,200
	150	30	80.4	155.5	120,800
	150	35	78.4	154.5	102,400
	150	40	76.5	153.4	88,400
	150	45	74.5	152.0	77,700
	150	50	72.5	150.5	66,900
	150	60	68.4	146.9	52,000
†012	150	70	64.3	142.4	42,000
	150	80	59.9	137.0	34,800
	150	90	55.4	130.5	29,400
	150	100	50.5	122.8	25,500
	150	110	45.4	113.7	22,100
	150	120	39.6	102.6	19,400
	150	130	33.1	88.8	17,100
	150	140	25.2	70.5	15,100
	150	150	13.3	41.0	13,500

RATED LOADS APPEARING IN SHADED AREAS ARE BASED ON STRUCTURAL OR OTHER FACTORS RATHER THAN STABILITY.

READ AND UNDERSTAND LIFTING CAPACITY NOTES ON A6-829-800021 LOCATED IN THE FRONT OF THIS MANUAL BEFORE OPERATING THIS MACHINE.

† LMI OPERATING CODE. REFER TO LMI MANUAL FOR INSTRUCTIONS.

HL150T
IDENTIFICATION

SERIAL NUMBER

View thousands of Crane Specifications on FreeCraneSpecs.com

Table 1-1. Axle Loading Chart (8105N64-B)

DESCRIPTION OR ITEM(S)	TOTAL WEIGHT OR ADJUSTMENT		BOOM OVER FRONT OF CARRIER				BOOM OVER REAR OF CARRIER			
			FRONT TANDEM WEIGHT		REAR TANDEM WEIGHT		FRONT TANDEM WEIGHT		REAR TANDEM WEIGHT	
	(lbs)	(kg)	(lbs)	(kg)	(lbs)	(kg)	(lbs)	(kg)	(lbs)	(kg)
Basic Machine including: Hyd. Outriggers Assembly with Four Floats; 1400 x 24 – 24 Pr. Tires (12); Upper Gantry – Lowered; Roller Circle; Bustle Counterweight; No Cable; Transmission – Upper; 75 Gal. Fuel – Upper; 15 Gal. Fuel – Lower; No Crane Attachment	130,600	59240.2	10112	4586.8	120488	54653.4	58417	26498.0	72183	32742.2
Basic Carrier Including: Hyd. Outrigger Assembly; 1400 x 24 – 24 Pr. Tires (12); Without Roller Circle; 15 Gal. Fuel; Floats (4)	66060	29964.8	22479	10196.5	43581	19768.3	22479	10196.5	43581	19768.3
Basic Carrier Including: Hyd. Outrigger Assembly Less Removable Rear End; 1400 x 24 – 24 Pr. Tires (12); Without Roller Circle; 15 Gal. Fuel; Floats (4) *	55900	25356.2	25880	11739.2	30020	13617.1	25880	11739.2	30020	13617.1
Effect of Removing:										
Bustle Counterweight *	-25720	-11666.6	+11071	+5021.8	-36791	-16688.4	-20464	-9282.5	-5256	-2384.1
Outrigger Beams and Horizontal Cylinders-Front (2) *	-2920	-1324.5	-1708	-774.7	-1212	-549.8	-1708	-774.7	-1212	-549.8
Outrigger Beams – Front (Manual or Hydraulic Outriggers) (2)	-2558	-1160.3	-1496	-678.6	-1062	-481.7	-1496	-678.6	-1062	-481.7
Outrigger Boxes – Frt (2)	-2200	-997.9	-1287	-583.8	-913	-414.1	-1287	-583.8	-913	-414.1
Outrigger Vertical Cylinder and Trunnions – Frt (2)	-890	-403.7	-520	-235.9	-370	-167.8	-520	-235.9	-370	-167.8
Complete Removable Rear end (Hydraulic Outriggers) *	-10160	-4608.6	+3320	+1506.0	-13480	-6114.5	+3320	+1506.0	-13480	-6114.5
Outrigger Beams and Horizontal Cylinders – Rear (2) *	-2920	-1324.5	+984	+446.3	-3904	-1770.9	+984	+446.3	-3904	-1770.9
Outrigger Beams – Rear Manual or Hydraulic outriggers (2)	-2558	-1160.3	+862	+391.0	-3420	-1551.3	+862	+391.0	-3420	-1551.3
Outrigger Boxes – Rear (2)	-2200	-997.9	+741	+336.1	-2941	-1334.0	+741	+336.1	-2941	-1334.0
Outrigger Vertical Cylinders and Trunnions – Rear (2)	-890	-403.7	+230	+104.3	-1190	-539.8	+230	+104.3	-1190	-539.8
Complete Removable Rear End (Manual Outriggers)	-8114	-3680.5	+2726	+1236.5	-10870	-4930.6	+2726	+1236.5	-10870	-4930.6
Roller Circle	-710	-322.1	-130	-59.0	-580	-263.1	-130	-59.0	-580	-263.1
50' Basic Boom Including: 25' Boom Base; 25' Boom Tip (5-Sheave); Upper Spreader; Boom Backstops; Boom Tip Guy Lines (2)	-8205	-3721.8	-13635	-6184.8	+5430	+2463.0	+10638	+4825.4	-18843	-8547.2
25' Boom Tip Including: Guy Lines (2)	-3240	-1469.7	-7628	-3460.1	+4388	+1990.4	+6445	+2923.5	-9685	-4393.1
25' Base Section Including: Upper Spreader; Boom Backstops	-4965	-2252.1	-4225	-1916.5	-740	-335.7	+2411	+1093.6	-7376	-3345.8
Miscellaneous Weights:										
Floats (4)	500	226.8								
Bottom Block – 1 Sheave	810	367.4								
Bottom Block – 2 Sheaves	890	403.7								
Bottom Block – 3 Sheaves	1350	612.4								
Bottom Block – 4 Sheaves	1680	762.0								
Bottom Block – 5 Sheaves	1890	857.3								
Jib Block	480	217.7								
Jib Hook	360	163.3								
Swivel	38	17.2								
Effect of Adding:										
Hydraulic outriggers in lieu of manual outriggers	+2016	+914.5								
Front Bumper Counterweight	+14,000	+6350.4	+19034	+8633.8	-5034	-2283.4	+19034	+8633.8	-5034	-2283.4
Front Bumper Counterweight	+8000	+3628.8	+10856	+4924.3	-2856	-1295.5	+10856	+4924.3	-2856	-1295.5

*Actual scaled weights from "TRUCK CRANE WEIGHT AND COMPLIANCE TO B30.5-1968 CODE" DATES: 10-01-71, 12-15-73, and 2-06-74

NOTE: THE STRUCTURAL MATERIAL USED TO FABRICATE THIS MODEL HAS A NOMINAL WEIGHT TOLERANCE OF PLUS OR MINUS 3%. THEREFORE, THE WEIGHT DATA PROVIDED SHOULD BE USED FOR REFERENCE ONLY. TO INSURE THAT ANY SPECIFIC CONFIGURATION MEETS LOCAL HIGHWAY REGULATIONS, WE SUGGEST THAT THE CALCULATED WEIGHT DISTRIBUTION BE VERIFIED BY ACTUAL SCALED WEIGHTS.

View thousands of Crane Specifications on FreeCraneSpecs.com

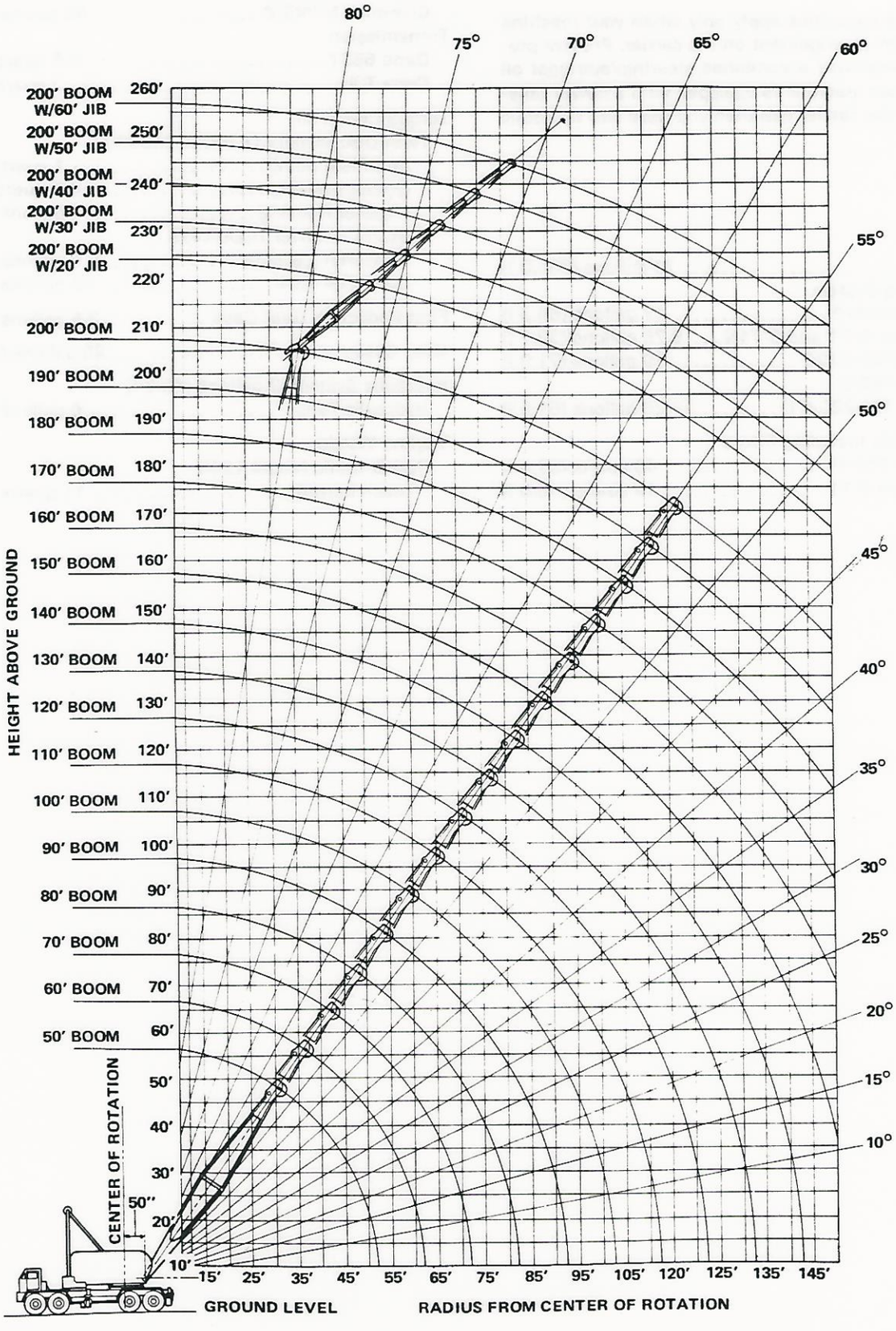

Figure 1-4. Crane Range Diagram (105J381-B)

View thousands of Crane Specifications on FreeCraneSpecs.com

BOOM LENGTH	50 FT. BOOM		60 FT. BOOM		70 FT. BOOM		80 FT. BOOM	
OPERATING RADIUS "D" IN FEET	HEIGHT & HALF WIDTH OF BIN		HEIGHT & HALF WIDTH OF BIN		HEIGHT & HALF WIDTH OF BIN		HEIGHT & HALF WIDTH OF BIN	
	"E"	"U"	"E"	"U"	"E"	"U"	"E"	"U"
30	37'-6"	6'-0"	46'-0"	5'-7"	54'-1"	5'-3"	61'-4"	5'-1"
35	34'-3"	7'11"	45'-11"	6'-2"	54'-11"	5'-10"	63'-8"	5'-4"
40	30'-0"	10'-4"	42'-11"	7'-8"	54'-10"	6'-2"	64'-1"	5'-9"
45	24'-6"	15'-9"	39'-0"	9'-7"	51'-8"	7'-5"	63'-1"	6'-2"
50	16'-8"	19'-11"	34'-1"	12'-0"	47'-11"	9'-1"	60'-3"	7'-3"
55			28'-8"	14'-3"	43'-4"	10'-11"	56'-7"	8'-7"
60			18'-10"	22'-1"	37'-8"	13'-5"	53'-3"	9'-5"
65					30'-8"	16'-11"	47'-2"	12'-1"
70					20'-11"	23'-9"	40'-11"	14'-7"
HEIGHT & WIDTH OF STOCKPILE	"F" 28'-9"	"V" 61'-5"	"F" 35'-10"	"F" 75'-5"	"F" 42'-11"	"V" 89'-8"	"F" 50'-0"	"V" 103'-10"
RADIUS "G"	41'-3"		48'-4"		55'-5"		62'-6"	
HEIGHT OF CLAM-SHELL BUCKET "T"	12'-1" (2 CU. YD.)							
RANGES FIGURED WITH 2 CU. YD. BUCKET								

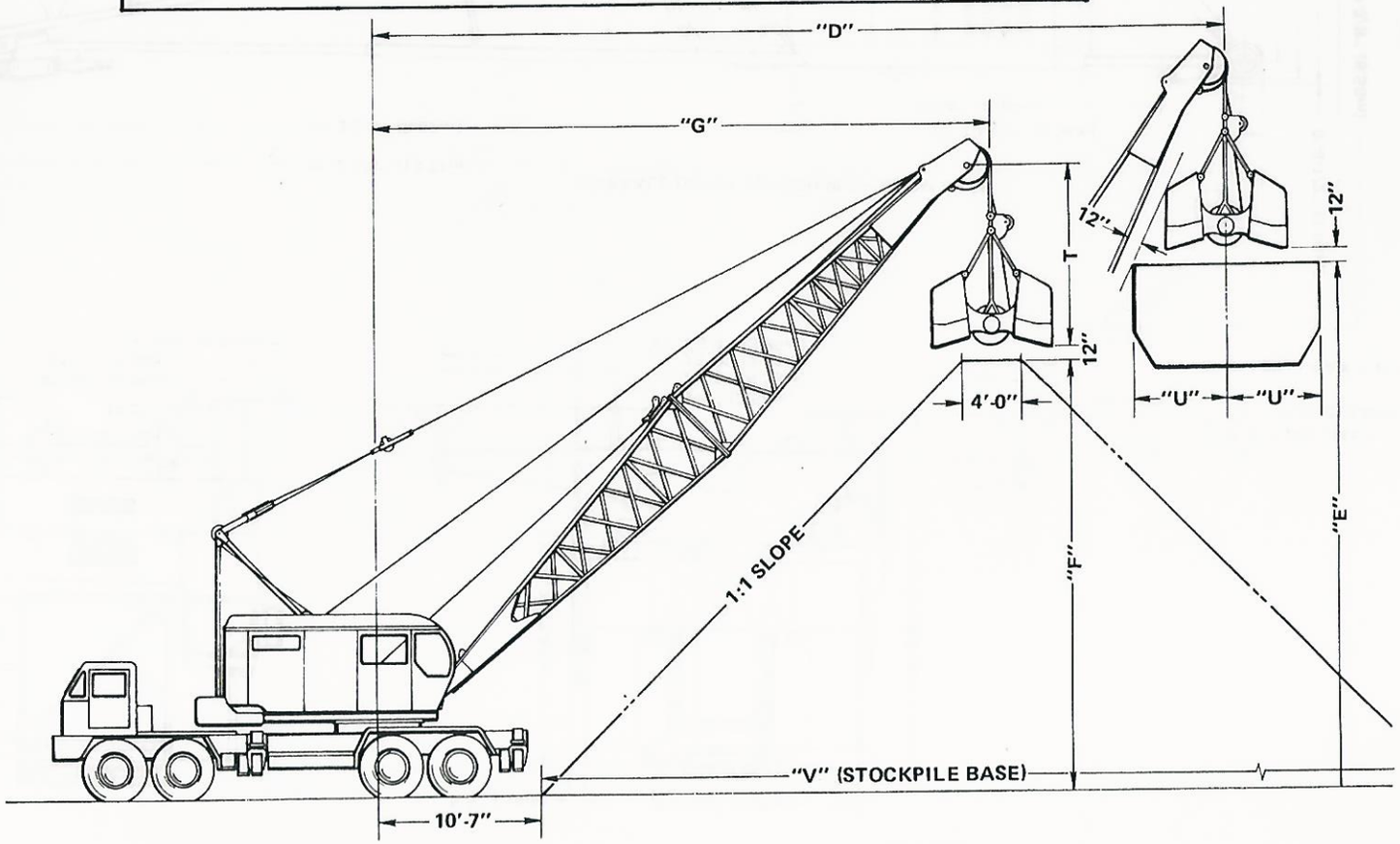

Figure 1-7. Clamshell Range Diagram (105J380)

View thousands of Crane Specifications on FreeCraneSpecs.com

NOTE: RADIUS TAKEN FROM PLATE ON CRANE ITSELF.

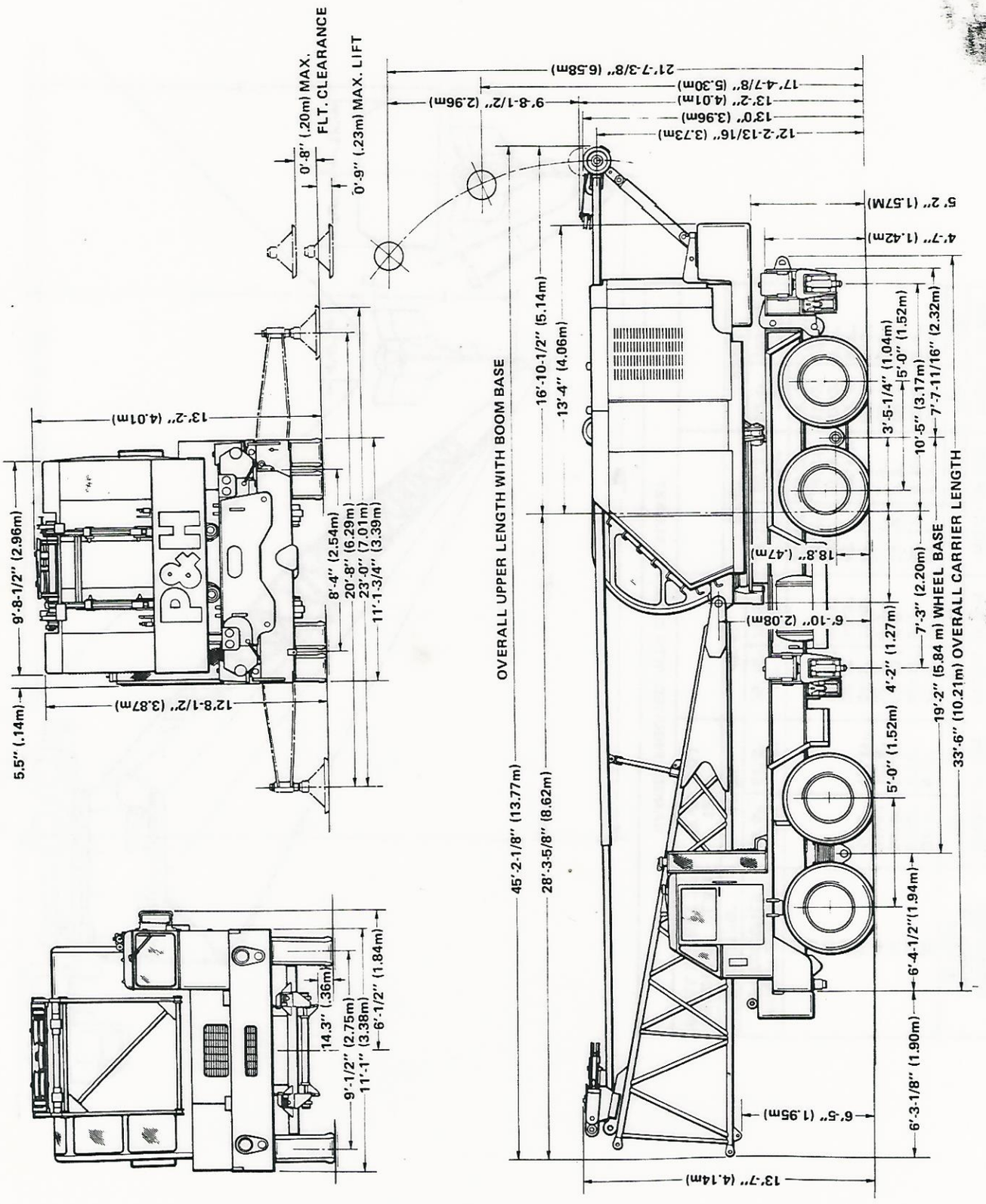

Figure 1-8. General Dimensions (8105J270)