Erection Plan Support Calculations
BRF-030-2(26)

Johnson, Vermont

CEE 38-mi-15

Prepared for:
A.L. St Onge Contractor, Inc

By:
Calderwood Engineering
May 18th, 2015

CALDERWOOD ENGINEERING
222 RIVER ROAD
RICHMOND, ME 04357
PH. (207) 737-2007 FAX (207) 737-2008

Johnson, Vermont
Erection Plan

Calculations by: TEPA
Checked by: GM

VT 15 Bridge 32
Fairfield BRF 030-2(26)

Location:
Town of Johnson in Lamoille County on VT 15 over the Smith Brook.
Approximately 1.75 miles easterly of the Cambridge/Johnson town line.

References:
-Standard Specifications for Highway Bridges (SSHB)
-Manual of Steel Construction: Allowable Stress Design, Ninth Ed. (ASD)
-National Design Specifications for Wood Construction (NDS)

Check crane mat capacity for HSP 8050 loaded at max radius
Use crane mats to distrubte load
Assume (2) 4'x20'x1' crane mats stacked
Place crane mats on fill

Most Loaded outrigger: $P := 91\ kip$ from BeamBoy, conservative

$D := 2\ ft$

$B := 4\ ft$

$L := 20\ ft$

$\gamma_{wood} := 50\ pcf$ dense hardwood

$P_{dead} := D \cdot B \cdot L \cdot \gamma_{wood} = 8\ kip$

$w := \frac{\langle P + P_{dead} \rangle}{(L \cdot B)} = 1.238\ ksf$

$w_{allow} := 5\ ksf$ from Table 4.11.4.1.4-1, SSHB

From available Borings: Soils are Sands, Gravel, with fines. If unacceptable soils present at crane mat positions, excavate 5 feet, fill and compact with coarse fill.

$FS := \frac{w_{allow}}{w} = 4.04$

$check = \text{“Okay for construction”}$

CALDERWOOD ENGINEERING
222 RIVER ROAD
RICHMOND, ME 04357
PH. (207) 737-2007 FAX (207) 737-2008

Now check crane mat moment capacity:

-Model as a canteliever support @ center of crane mat
-Analyze on a per foot basis

$$M_B := \frac{w \cdot \left(\frac{L}{2}\right)^2}{2} \cdot 1\ ft = 742.5\ in \cdot kip$$

Calculate capacity:

$F_b := 1150\ psi$ Mixed oak No. 1, NDS
$C_D := 1.25$ for construction loads
$C_M := 1.0$
$C_t := 1.0$
$C_L := 1.0$
$C_V := 1.0$
$C_r := 1.0$
$F'_b := F_b \cdot C_D \cdot C_M \cdot C_t \cdot C_L \cdot C_V \cdot C_r$ Table 4.3.1, NDS
$B := 1\ ft$
$H := 1\ ft$

$S_x := 2 \cdot \left(\frac{B \cdot H^2}{6}\right)$ (2) mats stacked on top of each other.

$M_y := S_x \cdot F'_b$

$M_y = 828\ in \cdot kip$

$$FS := \frac{M_y}{M_B} = 1.115$$

$check =$ "Okay for construction"

CALDERWOOD ENGINEERING
222 RIVER ROAD
RICHMOND, ME 04357
PH. (207) 737-2007 FAX (207) 737-2008

Crane Mat Set-up for HC-125

-Use 20'x4'x1' crane mats
-7 mats long x 1 mat wide x 2 mats deep

$B := 20\ ft$
$L := 28\ ft$
$D := 2\ ft$

$P_{dead} := B \cdot L \cdot D \cdot \gamma_{wood} = 56\ kip$

$W_{crane} := 213.03\ kip$ Total, from Manual

$P_{beam} := 29.78\ kip$

$L_{track} := 24.63\ ft$ From Manual

$w := \frac{(P_{dead} + W_{crane} + P_{beam})}{(B \cdot L)} = 0.534\ ksf$ Assume crane mats distribute load evenly to soil

Check soil capcity: $FS := \frac{w_{allow}}{w} = 9.371$

$check =$ "Okay for construction"

Now check crane mat moment capacity:

-Model as a continuous beam supported at ends (conservative)
-Analyze on a per foot basis

$M_B := \frac{w \cdot L^2}{8} \cdot 1\ ft = 627.501\ in \cdot kip$

Calculate capacity:

$F_b := 1150\ psi$ Mixed oak No. 1, NDS
$C_D := 1.25$ for construction loads
$C_M := 1.0$
$C_t := 1.0$
$C_L := 1.0$
$C_V := 1.0$
$C_r := 1.0$
$F'_b := F_b \cdot C_D \cdot C_M \cdot C_t \cdot C_L \cdot C_V \cdot C_r$ Table 4.3.1 NDS
$B := 1\ ft$

CALDERWOOD ENGINEERING
222 RIVER ROAD
RICHMOND, ME 04357
PH. (207) 737-2007 FAX (207) 737-2008

$H := 1\ ft$

$S_x := 2 \cdot \frac{B \cdot H^2}{6}$ (2) mats stacked on top of each other.

$M_y := S_x \cdot F'_b$

$M_y = 828\ in \cdot kip$

$M_y = 828\ in \cdot kip$

$FS := \frac{M_y}{M_B} = 1.32$

$check =$ "Okay for construction"

BEAMBOY V2.2 REPORT

HSP-8050 LOADING

LOAD CONFIGURATION

Based on boom loaded at maximum radius located directly over one of the front outriggers.

Point Loads

Beam Load: 29800 lb., x=50.7 ft.
Counterweight: 12500 lb., x=4.45 ft.

Distributed Loads

GVW: Start=1800 lb./ft., x=4.45 ft.; End=1800 lb./ft., x=27.4 ft.
Boom Self Weight: Start=229 lb./ft., x=15.7 ft.; End=229 lb./ft., x=50.7 ft.

Supports

Rear Outrigger A: 0 ft., Reaction=582 lb.
Front Outrigger B: 27.4 ft., Reaction=91000 lb.

5/15/2015

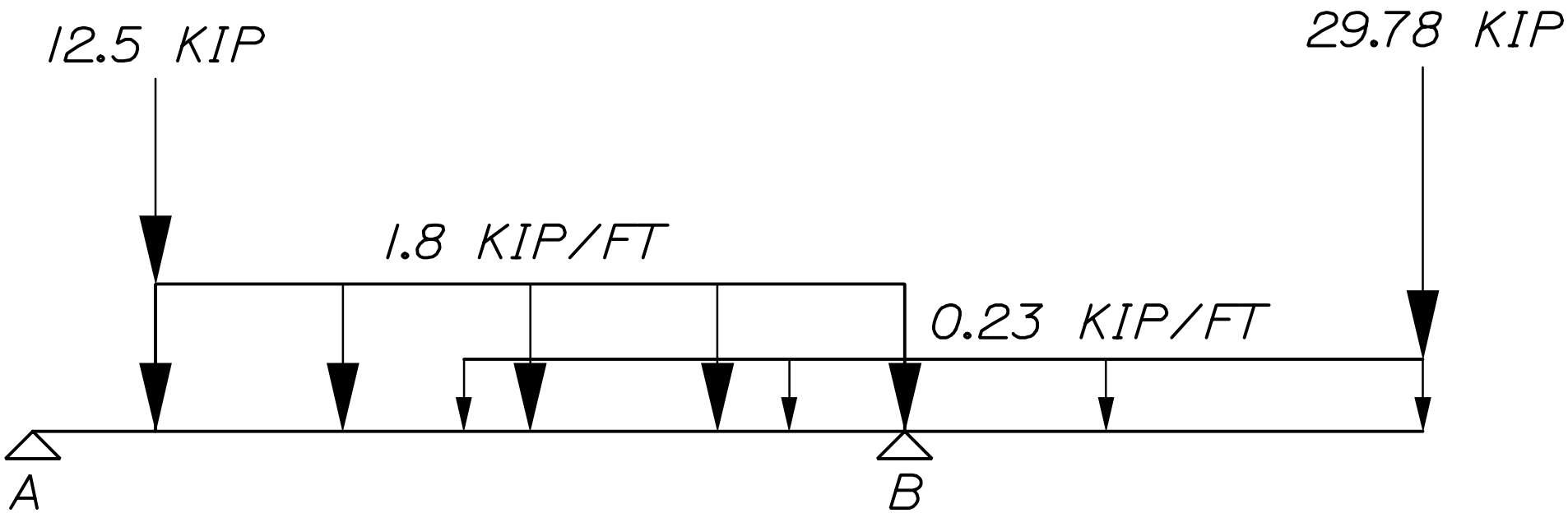

HSP 8050 Loading

TEREX LIFTING

AMERICAN HC 125

Hydraulic Crawler Crane

LIFT RATINGS IN POUNDS

With 59H Open Throat Boom, 24' Floating Mast and 51,000 Pound Counterweight Fully Retracted

Boom & Mast Length	Radius Feet	Boom Angle Degrees	Side Frames Retracted Pounds	Side Frames Extended Pounds	From Boom Pt. to Ground Feet
50' Boom	12	81.0	250,000*	250,000*	56
	15	77.5	180,380	220,000*	55
	20	71.5	113,920	147,800	54
	25	65.3	82,690	103,810	52
	30	58.8	64,520	79,600	49
	35	51.7	52,680	64,230	46
	40	43.9	44,310	53,680	41
	50	22.3	33,220	39,950	25
60' Boom	14	80.6	204,080	220,000*	66
	15	79.6	180,490	220,000*	66
	20	74.7	113,950	147,890	65
	25	69.6	82,680	103,850	63
	30	64.4	64,480	79,610	61
	35	59.0	52,660	64,220	58
	40	53.2	44,270	53,680	54
	50	39.8	33,220	39,970	45
	60	20.3	26,250	31,480	27
70' Boom	16	80.3	161,850	206,570*	76
	20	76.9	113,970	147,960	75
	25	72.7	82,690	103,880	73
	30	68.3	64,460	79,620	72
	35	63.8	52,650	64,220	69
	40	59.1	44,250	53,680	67
	50	48.9	33,210	39,980	59
	60	36.7	26,300	31,500	48
	70	18.8	21,470	25,760	29
80' Boom	17	80.8	146,560	194,360*	86
	20	78.6	113,890	147,940	85
	25	74.9	82,570	103,800	84
	30	71.1	64,320	79,520	82
	35	67.3	52,500	64,100	80
	40	63.3	44,090	53,550	78
	50	54.9	33,040	39,830	72
	60	45.5	26,150	31,350	63
	70	34.2	21,350	25,660	51
	80	17.5	17,820	21,450	30
90' Boom	19	80.5	122,960	161,540	95
	20	79.9	113,850	147,910	95
	25	76.6	82,530	103,770	94
	30	73.3	64,260	79,480	93
	35	69.9	52,450	64,050	91
	40	66.5	44,040	53,510	89
	50	59.3	32,990	39,790	84
	60	51.5	26,120	31,310	77
	70	42.8	21,320	25,630	67
	80	32.2	17,820	21,450	54
	90	16.5	15,130	18,270	32
100' Boom	20	80.9	113,740	147,850	105
	25	78.0	82,380	103,660	104
	30	75.0	64,090	79,350	103
	35	72.0	52,270	63,880	102
	40	69.0	43,860	53,350	100
	50	62.7	32,770	39,590	95
	60	56.0	25,920	31,110	89
	70	48.7	21,130	25,450	81
	80	40.5	17,630	21,270	71
	90	30.5	14,960	18,110	57
	100	15.6	12,830	15,600	33

Boom & Mast Length	Radius Feet	Boom Angle Degrees	Side Frames Retracted Pounds	Side Frames Extended Pounds	From Boom Pt. to Ground Feet
110' Boom	22	80.7	98,620	126,330	115
	25	79.1	82,230	103,530	115
	30	76.4	63,930	79,210	114
	35	73.7	52,110	63,730	112
	40	71.0	43,690	53,200	111
	50	65.3	32,610	39,440	107
	60	59.4	25,770	30,950	101
	70	53.2	20,980	25,310	94
	80	46.3	17,480	21,130	86
	90	38.5	14,800	17,960	75
	100	29.0	12,700	15,470	60
	110	14.8	10,990	13,470	34
120' Boom	23	81.0	92,290	117,560	125
	25	80.0	82,080	103,400	125
	30	77.6	63,740	79,050	124
	35	75.1	51,930	63,550	123
	40	72.6	43,490	53,020	121
	50	67.5	32,380	39,230	117
	60	62.2	25,550	30,720	113
	70	56.7	20,750	25,090	107
	80	50.7	17,250	20,910	99
	90	44.2	14,580	17,740	90
	100	36.8	12,480	15,260	78
	110	27.8	10,780	13,260	62
	120	14.2	9,370	11,610	36
130' Boom	25	80.8	81,910	103 ,250	135
	30	78.5	63,580	78,910	134
	35	76.3	51,770	63,390	133
	40	74.0	43,330	52,870	132
	50	69.3	32,230	39,080	128
	60	64.5	25,400	30,570	124
	70	59.5	20,610	24,950	119
	80	54.2	17,110	20,770	112
	90	48.6	14,440	17,600	104
	100	42.4	12,350	15,130	94
	110	35.3	10,640	13,130	81
	120	26.6	9,250	11,490	65
	130	13.6	8,070	10,110	37
140' Boom	27	80.6	73,350	91,760	145
	30	79.4	63,380	78,740	144
	35	77.3	51,580	63,210	143
	40	75.2	43,120	52,680	142
	50	70.9	32,000	38,870	139
	60	66.5	25,190	30,340	135
	70	61.9	20,370	24,730	130
	80	57.2	16,870	20,540	124
	90	52.1	14,200	17,370	117
	100	46.7	12,110	14,900	108
	110	40.8	10,410	12,900	98
	120	34.0	9,010	11 ,260	84
	130	25.6	7,830	9,880	67
	140	13.1	6,840	8,720	38
150' Boom	28	80.8	69,530	86,950	155
	30	80.1	63,180	78,570	154
	35	78.1	51,380	63,010	153
	40	76.2	42,920	52,490	152
	50	72.2	31,790	38,670	149
	60	68.1	24,980	30,140	146

Boom & Mast Length	Radius Feet	Boom Angle Degrees	Side Frames Retracted Pounds	Side Frames Extended Pounds	From Boom Pt. to Ground Feet
150' Boom (cont.)	70	63.9	20,180	24,540	141
	80	59.6	16,670	20,350	136
	90	55.0	14,000	17,180	129
	100	50.2	11,900	14,700	122
	110	45.0	10,200	12,700	112
	120	39.3	8,810	11,060	101
	130	32.8	7,640	9,690	87
	140	24.8	6,630	8,520	69
	150	12.7	5,770	7,520	39
160' Boom	30	80.7	62,990	78,410	165
	35	78.9	51,180	62,830	164
	40	77.1	42,700	52,300	163
	50	73.3	31,560	38,450	160
	60	69.6	24,760	29,910	157
	70	65.7	19,940	24,310	152
	80	61.7	16,430	20,120	147
	90	57.5	13,760	16,940	141
	100	53.2	11,650	14,460	134
	110	48.5	9,950	12,450	126
	120	43.5	8,550	10,810	116
	130	38.0	7,380	9,440	105
	140	31.7	6,380	8,270	90
	150	24.0	5,530	7,280	71
	160	12.3	4,780	6,400	40
170' Boom	31	80.9	59,980	73,340*	175
	35	79.6	50,980	62,630	174
	40	77.8	42,500	52,110	173
	50	74.3	31,360	38,260	170
	60	70.8	24,570	29,710	167
	70	67.2	19,760	24,130	163
	80	63.5	16,240	19,930	159
	90	59.6	13,570	16,760	153
	100	55.6	11,470	14,270	147
	110	51.4	9,770	12,270	139
	120	47.0	8,370	10,630	131
	130	42.1	7,200	9,260	120
	140	36.8	6,210	8,100	108
	150	30.7	5,350	7,100	93
	160	23.2	4,610	6,240	73
	170	11.9	3,960	5,470	41
180' Boom	33	80.8	55,060	64,040*	184
	35	80.1	50,780	62,430	184
	40	78.5	42,290	51,920	183
	50	75.2	31,120	38,040	181
	60	71.9	24,350	29,480	178
	70	68.5	19,520	23,900	174
	80	65.1	16,010	19,700	170
	90	61.5	13,330	16,530	165
	100	57.8	11,220	14,030	159
	110	53.9	9,520	12,030	152
	120	49.9	8,110	10,380	144
	130	45.6	6,950	9,010	135
	140	40.9	5,940	7,840	124
	150	35.7	5,090	6,840	111
	160	29.8	4,340	5,970	96
	170	22.5	3,690	5,220	75
	180	11.5	3,130	4,560	42

(Continued)

LIFT RATINGS IN POUNDS (continued)

With 59H Open Throat Boom, 24' Floating Mast and 51,000 Pound Counterweight Fully Retracted

Boom & Mast Length	Radius Feet	Boom Angle Degrees	Side Frames Retracted Pounds	Side Frames Extended Pounds	From Boom Pt. to Ground Feet
190' Boom	34	81.0	52,630	55,980*	194
	35	80.7	50,570	55,700*	194
	40	79.1	42,070	51,710	193
	50	76.0	30,900	37,820	191
	60	72.9	24,130	29,260	188
	70	69.7	19,310	23,700	185
	80	66.5	15,780	19,480	181
	90	63.1	13,100	16,300	176
	100	59.7	11,000	13,810	170
	110	56.1	9,300	11,810	164
	120	52.4	7,900	10,170	157
	130	48.5	6,720	8,790	149
	140	44.3	5,720	7,620	139
	150	39.8	4,870	6,620	128
	160	34.8	4,120	5,760	115
	170	29.0	3,470	4,990	98
	180	21.9	2,900	4,330	77
	190	11.2	2,390	3,740	43
200' Boom	36	80.8	48,430	49,280*	204
	40	79.7	41,860	48,570*	203
	50	76.7	30,660	37,610	201
	60	73.8	23,900	29,020	199
	70	70.8	19,060	23,460	195
	80	67.7	15,540	19,250	192
	90	64.6	12,850	16,060	187
	100	61.3	10,740	13,570	182
	110	58.0	9,040	11,560	176
	120	54.6	7,640	9,910	169
	130	51.0	6,460	8,530	162
	140	47.2	5,460	7,360	153
	150	43.1	4,610	6,370	143
	160	38.7	3,850	5,490	131
	170	33.8	3,200	4,730	118
	180	28.3	2,630	4,070	101
	190	21.4	2,120	3,480	79
	200	10.9	1,670	2,950	44

Boom & Mast Length	Radius Feet	Boom Angle Degrees	Side Frames Retracted Pounds	Side Frames Extended Pounds	From Boom Pt. to Ground Feet
210' Boom	38	80.7	43,610*	43,610*	214
	40	80.2	41,640	43,270*	214
	50	77.4	30,440	37,390	212
	60	74.6	23,690	29,090	209
	70	71.7	18,860	23 260	206
	80	68.8	15,330	19,050	202
	90	65.9	12,650	15,860	198
	100	62.8	10,530	13,360	193
	110	59.7	8,830	11,350	188
	120	56.5	7,430	9,710	182
	130	53.1	6,250	8,330	174
	140	49.6	5,250	7,160	166
	150	46.0	4,400	6,160	157
	160	42.0	3,650	5,290	147
	170	37.7	3,000	4,530	135
	180	33.0	2,430	3,860	121
	190	27.5	1,910	3,260	103
	200	20.8	1,460	2,740	81
	210	10.7	1,070	2,280	45
220' Boom	39	80.9	38,720*	38,720*	224
	40	80.6	38,510*	38,510*	224
	50	78.0	30,210	35,940*	222
	60	75.3	23,460	28,880	219
	70	72.6	18,620	23,030	217
	80	69.8	15,090	18,820	213
	90	67.0	12,400	15,620	209
	100	64.2	10,290	13,120	205
	110	61.2	8,590	11,110	199
	120	58.2	7,170	9,450	193
	130	55.1	5,990	8,070	187
	140	51.8	4,990	6,900	179
	150	48.4	4,140	5,910	171
	160	44.8	3,390	5,030	161
	170	41.0	2,740	4,280	151
	180	36.8	2,160	3,600	138
	190	32.2	1,640	3,000	124
	200	26.9	1,190	2,470	106
	210	20.4	–	2,000	83
	220	10.4	–	1,580	46

Boom & Mast Length	Radius Feet	Boom Angle Degrees	Side Frames Retracted Pounds	Side Frames Extended Pounds	From Boom Pt. to Ground Feet
230' Boom	41	80.8	34,060*	34,060*	234
	50	78.5	29,970	32,230*	232
	60	75.9	23,230	28,650	230
	70	73.4	18,400	22,820	227
	80	70.7	14,860	18,590	224
	90	68.1	12,170	15,400	220
	100	65.4	10,050	12,890	216
	110	62.6	8,350	10,880	211
	120	59.7	6,940	9,230	205
	130	56.8	5,770	7,850	199
	140	53.8	4,760	6,680	192
	150	50.6	3,900	5,670	184
	160	47.3	3,150	4,800	175
	170	43.8	2,490	4,030	165
	180	40.0	1,920	3,360	154
	190	36.0	1,410	2,770	141
	200	31.5	–	2,230	126
	210	26.3	–	1,760	108
	220	19.9	–	1,330	84
240' Boom	42	80.9	29,830*	29,830*	244
	50	79.0	27,070*	27,070*	242
	60	76.5	23,010	25,030*	240
	70	74.1	18,150	22,350*	237
	80	71.6	14,620	18,360	234
	90	69.0	11,920	15,150	231
	100	66.4	9,810	12,650	227
	110	63.8	8,090	10,630	222
	120	61.1	6,680	8,970	217
	130	58.3	5,500	7,590	211
	140	55.5	4,500	6,420	204
	150	52.5	3,640	5,410	197
	160	49.5	2,890	4,540	189
	170	46.2	2,230	3,770	180
	180	42.8	1,660	3,100	169
	190	39.2	1,140	2,510	158
	200	35.2	–	1,960	145
	210	30.8	–	1,490	129
	220	25.7	–	1,060	110

LIFT RATINGS IN KILOGRAMS

With 59H Open Throat Boom, 7.3M Floating Mast and 23,134 Kg Counterweight Fully Retracted

Boom & Mast Length	Radius Meters	Boom Angle Degrees	Side Frames Retracted Kilograms	Side Frames Extended Kilograms	From Boom Pt. to Ground Meters
15.2 M Boom	3.7	81.0	113,400*	113,400*	17
	4.0	79.7	100,000*	100,000*	17
	4.5	77.8	84,120	100,000*	17
	5.0	75.8	70,380	91,510*	17
	5.5	73.8	60,440	80,170	17
	6.0	71.9	52,910	68,860	17
	7.0	67.8	42,230	53,610	16
	8.0	63.7	35,070	43,790	16
	9.0	59.4	29,890	36,930	15
	10.0	54.9	26,020	31,850	14
	11.0	50.1	22,960	27,950	14
	12.0	44.9	20,510	24,870	13
	13.0	39.2	18,500	22,360	12
	14.0	32.7	16,820	20,270	10
	15.0	24.7	15,380	18,500	8

Boom & Mast Length	Radius Meters	Boom Angle Degrees	Side Frames Retracted Kilograms	Side Frames Extended Kilograms	From Boom Pt. to Ground Meters
18.3 M Boom	4.3	80.6	92,570	100,093*	20
	4.5	79.8	84,170	100,000*	20
	5.0	78.2	70,410	91,470*	20
	5.5	76.6	60,460	80,210	20
	6.0	75.0	52,930	68,910	20
	7.0	71.7	42,230	53,630	19
	8.0	68.4	35,060	43,790	19
	9.0	64.9	29,880	36,940	19
	10.0	61.4	26,000	31,850	18
	11.0	57.7	22,940	27,940	17
	12.0	53.9	20,500	24,870	17
	13.0	49.9	18,480	22,350	16
	14.0	45.6	16,800	20,260	15
	15.0	41.0	15,380	18,510	14
	16.0	35.9	14,150	17,010	13
	17.0	30.0	13,100	15,710	11
	18.0	22.8	12,160	14,580	9

Boom & Mast Length	Radius Meters	Boom Angle Degrees	Side Frames Retracted Kilograms	Side Frames Extended Kilograms	From Boom Pt. to Ground Meters
21.3 M Boom	4.9	80.3	73,410	93,700*	23
	5.0	79.9	70,440	91,420*	23
	5.5	78.6	60,470	80,250	23
	6.0	77.2	52,950	68,940	23
	7.0	74.4	42,230	53,650	23
	8.0	71.6	35,060	43,800	22
	9.0	68.7	29,870	36,950	22
	10.0	65.8	26,000	31,850	21
	11.0	62.8	22,940	27,940	21
	12.0	59.7	20,490	24,870	20
	13.0	56.5	18,470	22,350	20
	14.0	53.2	16,800	20,270	19
	15.0	49.8	15,370	18,510	18
	16.0	46.1	14,140	17,010	17
	17.0	42.2	13,110	15,720	16
	18.0	38.0	12,180	14,580	15
	19.0	33.4	11,350	13,590	14
	20.0	28.0	10,620	12,730	12

(Continued)

LIFT RATINGS IN KILOGRAMS (continued)

With 59H Open Throat Boom, 7.3M Floating Mast and 23,134 Kg Counterweight Fully Retracted

Boom & Mast Length	Radius Meters	Boom Angle Degrees	Side Frames Retracted Kilograms	Side Frames Extended Kilograms	From Boom Pt. to Ground Meters
24.4 M Boom	5.2	80.8	66,480	88,160*	26
	5.5	80.0	60,450	80,250	26
	6.0	78.8	52,910	68,930	26
	7.0	76.4	42,180	53,620	26
	8.0	74.0	35,000	43,770	25
	9.0	71.5	29,810	36,900	25
	10.0	69.0	25,930	31,800	25
	11.0	66.4	22,880	27,880	24
	12.0	63.8	20,420	24,820	24
	13.0	61.2	18,400	22,290	23
	14.0	58.5	16,720	20,200	23
	15.0	55.6	15,290	18,440	22
	16.0	52.7	14,070	16,950	21
	17.0	49.7	13,050	15,650	21
	18.0	46.5	12,110	14,520	20
	19.0	43.1	11,280	13,530	19
	20.0	39.5	10,550	12,670	17
	22.0	31.3	9,300	11,170	15
	24.0	20.4	8,260	9,940	10
27.4 M Boom	5.8	80.5	55,770	73,270	29
	6.0	80.1	52,900	68,930	29
	7.0	77.9	42,160	53,600	29
	8.0	75.8	34,980	43,750	29
	9.0	73.6	29,780	36,880	28
	10.0	71.4	25,910	31,780	28
	11.0	69.2	22,850	27,850	28
	12.0	66.9	20,390	24,790	27
	13.0	64.6	18,380	22,270	27
	14.0	62.3	16,700	20,190	26
	15.0	59.9	15,270	18,430	26
	16.0	57.4	14,040	16,920	25
	17.0	54.9	13,030	15,620	24
	18.0	52.3	12,090	14,500	24
	19.0	49.6	11,270	13,500	23
	20.0	46.8	10,540	12,670	22
	22.0	40.7	9,290	11,170	20
	24.0	33.7	8,270	9,950	17
	26.0	25.1	7,400	8,920	14
30.5 M Boom	6.1	80.9	51,590	67,070	32
	7.0	79.2	42,090	53,560	32
	8.0	77.2	34,910	43,690	32
	9.0	75.3	29,700	36,820	32
	10.0	73.3	25,840	31,710	31
	11.0	71.4	22,770	27,780	31
	12.0	69.4	20,310	24,720	31
	13.0	67.3	18,290	22,200	30
	14.0	65.3	16,600	20,100	30
	15.0	63.2	15,170	18,340	29
	16.0	61.0	13,960	16,840	29
	17.0	58.9	12,940	15,540	28
	18.0	56.6	12,000	14,410	27
	19.0	54.3	11,190	13,420	27
	20.0	52.0	10,450	12,580	26
	22.0	47.0	9,200	11,080	24
	24.0	41.6	8,170	9,850	22
	26.0	35.5	7,320	8,840	20
	28.0	28.3	6,590	7,980	16
	30.0	18.7	5,960	7,240	12
33.5 M Boom	6.7	80.7	44,730	57,310	35
	7.0	80.2	42,020	53,510	35
	8.0	78.4	34,840	43,630	35
	9.0	76.7	29,630	36,750	35
	10.0	74.9	25,760	31,640	34
	11.0	73.1	22,700	27,710	34
	12.0	71.3	20,240	24,660	34
	13.0	69.5	18,220	22,130	33
	14.0	67.7	16,530	20,030	33
	15.0	65.8	15,100	18,270	33
	16.0	63.9	13,870	16,760	32
	17.0	62.0	12,870	15,460	32
	18.0	60.0	11,940	14,340	31
	19.0	58.0	11,110	13,340	30
	20.0	56.0	10,380	12,510	30
	22.0	51.7	9,130	11,010	28

Boom & Mast Length	Radius Meters	Boom Angle Degrees	Side Frames Retracted Kilograms	Side Frames Extended Kilograms	From Boom Pt. to Ground Meters
33.5 M Boom (cont.)	24.0	47.2	8,110	9,800	27
	26.0	42.3	7,250	8,780	25
	28.0	36.9	6,520	7,910	22
	30.0	30.7	5,900	7,180	19
	32.0	23.0	5,360	6,540	17
36.6 M Boom	7.0	81.0	41,860	53,320	38
	8.0	79.4	34,760	43,570	38
	9.0	77.8	29,540	36,690	38
	10.0	76.2	25,680	31,570	38
	11.0	74.6	22,610	27,630	37
	12.0	72.9	20,140	24,570	37
	13.0	71.3	18,120	22,040	37
	14.0	69.6	16,430	19,940	36
	15.0	67.9	15,000	18, 180	36
	16.0	66.2	13,770	16,670	35
	17.0	64.5	12,780	15,370	35
	18.0	62.7	11,840	14,230	35
	19.0	61.0	11,010	13,300	34
	20.0	59.1	10,280	12,420	33
	22.0	55.4	9,020	10,910	32
	24.0	51.5	8 000	9,700	31
	26.0	47.3	7,140	8,680	29
	28.0	42.9	6,410	7,810	27
	30.0	38.0	5,800	7,080	24
	32.0	32.6	5,260	6,450	22
	34.0	26.1	4,780	5,890	18
	36.0	17.6	4,360	5,390	13
39.6 M Boom	7.6	30.8	37,150	46,830	41
	8.0	80.2	34,690	43,490	41
	9.0	78.7	29,480	36,630	41
	10.0	77.3	25,620	31,500	41
	11.0	75.8	22,540	27,550	40
	12.0	74.3	20 070	24,510	40
	13.0	72.8	18,050	21,970	40
	14.0	71.2	16,360	19,870	40
	15.0	69.7	14,930	18,110	39
	16.0	68.2	13,700	16,600	39
	17.0	66.6	12,710	15,300	38
	18.0	65.0	11,770	14,170	38
	19.0	63.4	10,940	13,240	37
	20.0	61.7	10,210	12,350	37
	22.0	58.4	8,960	10,860	36
	24.0	54.9	7,940	9,630	34
	26.0	51.3	7,080	8,610	33
	28.0	47.5	6,360	7,760	31
	30.0	43.4	5,730	7,020	29
	32.0	39.0	5,190	6,380	27
	34.0	34.1	4,720	5,830	24
	36.0	28.5	4,310	5,340	21
	38.0	21.5	3,940	4,910	16
42.7 M Boom	8.2	80.6	33,270	41,620	44
	9.0	79.6	29,390	36,560	44
	10.0	78.2	25,530	31,420	44
	11.0	76.8	22,450	27,470	44
	12.0	75.4	19,970	24,420	43
	13.0	74.0	17,960	21,890	43
	14.0	72.6	16,260	19,790	43
	15.0	71.2	14,830	18,010	42
	16.0	69.8	13,590	16,500	42
	17.0	68.3	12,610	15,200	42
	18.0	66.9	11,670	14,060	41
	19.0	65.4	10,850	13,150	41
	20.0	63.9	10,110	12,260	40
	22.0	60.9	8,860	10,760	39
	24.0	57.8	7,830	9,530	38
	26.0	54.5	6,970	8,510	37
	28.0	51.1	6,250	7,650	35
	30.0	47.6	5,630	6,920	33
	32.0	43.8	5,080	6,280	32
	34.0	39.8	4,610	5,730	29
	36.0	35.3	4,200	5,240	27
	38.0	30.3	3,820	4,800	23
	40.0	21.1	3,190	4,110	20
	42.0	16.7	3,190	4,060	14

Boom & Mast Length	Radius Meters	Boom Angle Degrees	Side Frames Retracted Kilograms	Side Frames Extended Kilograms	From Boom Pt. to Ground Meters
45.7 M Boom	8.5	80.8	31,540	39,440	47
	9.0	80.3	29,300	36,480	47
	10.0	79.0	25,440	31,330	47
	11.0	77.7	22,360	27,380	47
	12.0	76.4	19,890	24,340	47
	13.0	75.1	17,860	21,800	46
	14.0	73.8	16,160	19,690	46
	15.0	72.5	14,740	17,930	46
	16.0	71.2	13,500	16,420	45
	17.0	69.9	12,520	15,110	45
	18.0	68.5	11,580	13,970	45
	19.0	67.2	10,760	13,060	44
	20.0	65.8	10,020	12,170	44
	22.0	63.0	8,760	10,660	43
	24.0	60.2	7,730	9,440	42
	26.0	57.2	6,890	8,420	40
	28.0	54.2	6,160	7,560	39
	30.0	51.0	5,530	6,820	38
	32.0	47.7	5,000	6,190	36
	34.0	44.2	4,520	5,630	34
	36.0	40.4	4,100	5,140	32
	38.0	36.4	3,730	4,710	29
	40.0	31.9	3,410	4,330	26
	42.0	26.7	3,100	3,970	22
	44.0	20.4	2,830	3,660	18
48.8 M Boom	9.1	80.7	28,570	35,570	50
	10.0	79.7	25,360	31,250	50
	11.0	78.5	22,270	27,290	50
	12.0	77.3	19,790	24,250	50
	13.0	76.1	17,760	21,710	49
	14.0	74.9	16,060	19,600	49
	15.0	73.6	14,620	17,820	49
	16.0	72.4	13,390	16,310	49
	17.0	71.2	12,420	15,000	48
	18.0	69.9	11,480	13,870	48
	19.0	68.7	10,650	12,960	47
	20.0	67.4	9,910	12,070	47
	22.0	64.8	8,650	10,560	46
	24.0	62.2	7,630	9,340	45
	26.0	59.5	6,770	8,320	44
	28.0	56.7	6,040	7,450	43
	30.0	53.8	5,420	6,710	41
	32.0	50.9	4,880	6,080	40
	34.0	47.8	4,410	5,520	38
	36.0	44.5	4,000	5,040	36
	38.0	41.0	3,620	4,600	34
	40.0	37.3	3,290	4,220	31
	42.0	33.2	2,990	3,860	29
	44.0	28.5	2,720	3,550	25
	46.0	23.1	2,480	3,260	21
	48.0	16.0	2,250	3,000	15
51.8 M Boom	9.4	80.9	27,210	33,270*	53
	10.0	80.3	25,260	31,160	53
	11.0	79.2	22,170	27,200	53
	12.0	78.0	19,710	24,170	53
	13.0	76.9	17,670	21,620	53
	14.0	75.8	15,980	19,510	52
	15.0	74.6	14,540	17,740	52
	16.0	73.5	13,300	16,220	52
	17.0	72.3	12,330	14,920	51
	18.0	71.2	11,390	13,780	51
	19.0	70.0	10,560	12,870	51
	20.0	68.8	9,830	11,550	50
	22.0	66.4	8,580	10,480	50
	24.0	64.0	7,550	9,250	49
	26.0	61.5	6,690	8,230	48
	28.0	58.9	5,960	7,370	46
	30.0	56.3	5,340	6,640	45
	32.0	53.6	4,800	6,000	44
	34.0	50.8	4,320	5,440	42
	36.0	47.8	3,910	4,960	40
	38.0	44.8	3,540	4,520	38
	40.0	41.5	3,200	4,120	36
	42.0	38.0	2,910	3,780	34

(Continued)

LIFT RATINGS IN KILOGRAMS (continued)

With 59H Open Throat Boom, 7.3M Floating Mast and 23,134 Kg Counterweight Fully Retracted

Boom & Mast Length	Radius Meters	Boom Angle Degrees	Side Frames Retracted Kilograms	Side Frames Extended Kilograms	From Boom Pt. to Ground Meters
51.8 M Boom (cont.)	44.0	34.3	2,640	3,470	31
	46.0	30.1	2,390	3,180	28
	48.0	25.3	2,170	2,920	24
	50.0	19.4	1,960	2,680	19
54.9 M Boom	10.1	80.8	24,980	29,050*	56
	11.0	79.8	22,080	27,110	56
	12.0	78.7	19,600	24,080	56
	13.0	77.7	17,570	21,530	56
	14.0	76.6	15,870	19,410	55
	15.0	75.5	14,430	17,640	55
	16.0	74.4	13,200	16,130	55
	17.0	73.3	12,240	14,820	55
	18.0	72.2	11,290	13,680	54
	19.0	71.1	10,460	12,780	54
	20.0	70.0	9,720	11,890	54
	22.0	67.8	8,470	10,380	53
	24.0	65.5	7,430	9,150	52
	26.0	63.2	6,570	8,120	51
	28.0	60.8	8,850	7,270	50
	30.0	58.4	5,230	6,530	49
	32.0	55.9	4,680	5,890	47
	34.0	53.3	4,210	5,330	46
	36.0	50.7	3,800	4,840	44
	38.0	47.9	3,420	4,400	43
	40.0	45.0	3,100	4,020	41
	42.0	42.0	2,790	3,670	39
	44.0	38.7	2,520	3,350	36
	46.0	35.2	2,280	3,070	34
	48.0	31.4	2,060	2,810	31
	50.0	27.1	1,840	2,560	27
	52.0	22.0	1,660	2,340	23
	54.0	15.5	1,490	2,150	17
57.9 M Boom	10.4	81.0	23,880	25,390*	59
	11.0	80.3	21,990	25,210*	59
	12.0	79.3	19,510	23,990	59
	13.0	78.3	17,470	21,440	59
	14.0	77.3	15,770	19,320	59
	15.0	76.3	14,330	17,540	58
	16.0	75.3	13,210	16,020	58
	17.0	74.2	12,130	14,710	58
	18.0	73.2	11,190	13,580	57
	19.0	72.2	10,360	12,680	57
	20.0	71.1	9,620	11,790	57
	22.0	69.0	8,360	10,280	56
	24.0	66.9	7,330	9,040	55
	26.0	64.7	6,480	8,030	54
	28.0	62.5	5,750	7,170	53
	30.0	60.2	5,120	6,430	52
	32.0	57.9	4,580	5,780	51
	34.0	55.5	4,110	5,230	50
	36.0	53.1	3,690	4,740	48
	38.0	50.6	3,320	4,300	47
	40.0	48.0	2,990	3,920	45
	42.0	45.2	2,690	3,570	43
	44.0	42.3	2,410	3,250	41
	46.0	39.3	2,170	2,960	39
	48.0	36.1	1,950	2,710	36
	50.0	32.5	1,740	2,460	33
	52.0	28.6	1,560	2,250	30
	54.0	24.1	1,390	2,050	26
	56.0	18.7	1,230	1,860	20
61.0 M Boom	11.0	80.8	21,890	22,350*	62
	12.0	79.9	19,410	22,050*	62
	13.0	78.9	17,370	21,350	62
	14.0	77.9	15,670	19,230	62
	15.0	77.0	14,220	17,450	61
	16.0	76.0	13,100	15,920	61
	17.0	75.0	12,030	14,610	61
	18.0	74.1	11,090	13,470	6 1
	19.0	73.1	10,250	12,580	60

Boom & Mast Length	Radius Meters	Boom Angle Degrees	Side Frames Retracted Kilograms	Side Frames Extended Kilograms	From Boom Pt. to Ground Meters
61.0 M Boom (cont.)	20.0	72.1	9,510	11,680	60
	22.0	70.1	8,260	10,180	59
	24.0	68.1	7,230	8,950	59
	26.0	66.1	6,370	7,920	58
	28.0	64.0	5,630	7,050	57
	30.0	61.9	5,010	6,310	56
	32.0	59.7	4,470	5,680	55
	34.0	57.5	4,000	5,120	53
	36.0	55.2	3,570	4,630	52
	38.0	52.9	3,200	4,190	51
	40.0	50.5	2,870	3,800	49
	42.0	48.0	2,570	3,450	47
	44.0	45.4	2,300	3,140	45
	46.0	42.7	2,050	2,850	43
	48.0	39.8	1 830	2,580	41
	50.0	36.8	1,630	2,350	38
	52.0	33.5	1,440	2,130	36
	54.0	29.9	1,260	1,920	32
	56.0	25.9	1,100	1,740	29
	58.0	21.1	–	1,570	24
	60.0	15.0	–	1,400	18
64.0 M Boom	11.6	80.7	19,780*	19,780*	65
	12.0	80.3	19,310	19,640*	65
	13.0	79.4	17,270	19,330*	65
	14.0	78.5	15,560	18,870*	65
	15.0	77.6	14,130	17,350	65
	16.0	76.7	13,020	15,830	64
	17.0	75.8	11,940	14,520	64
	18.0	74.8	11,000	13,370	64
	19.0	73.9	10,170	12,490	64
	20.0	73.0	9,430	11,600	63
	22.0	71.1	8,160	10,080	63
	24.0	69.2	7,130	8,850	62
	26.0	67.3	6,270	7,820	61
	28.0	65.3	5,540	6,960	60
	30.0	63.3	4,920	6,230	59
	32.0	61.3	4,380	5,590	58
	34.0	59.2	3,900	5,020	57
	36.0	57.1	3,480	4,530	56
	38.0	54.9	3,110	4,100	54
	40.0	52.7	2,780	3,710	53
	42.0	50.4	2,470	3,360	51
	44.0	48.1	2,210	3,050	50
	46.0	45.6	1,960	2,750	48
	48.0	43.0	1,740	2,500	46
	50.0	40.3	1,530	2,250	43
	52.0	37.5	1,350	2,040	41
	54.0	34.4	1,170	1,830	38
	56.0	31.1	1,010	1,650	35
	58.0	27.4	–	1,480	31
	60.0	23.1	–	1,310	27
	62.0	18.0	–	1 ,170	22
	64.0	10.7	–	1,030	14
67.1 M Boom	11.9	80.9	17,560*	17,560*	68
	12.0	80.8	17,560*	17,560*	68
	13.0	79.9	17,170	17,280*	68
	14.0	79.1	15,460	16,730*	68
	15.0	78.2	14,020	16,430*	68
	16.0	77.3	12,910	15,720	67
	17.0	76.4	11,840	14,410	67
	18.0	75.6	10,890	13,260	67
	19.0	74.7	10,060	12,390	67
	20.0	73.8	9,320	11,500	66
	22.0	72.0	8,050	9,980	66
	24.0	70.2	7,020	8,740	65
	26.0	68.3	6,160	7,720	64
	28.0	66.5	5,430	6,860	64
	30.0	64.6	4,800	6,110	63
	32.0	62.7	4,260	5,470	62
	34.0	60.8	3,780	4,910	61
	36.0	58.8	3,370	4,430	59

Boom & Mast Length	Radius Meters	Boom Angle Degrees	Side Frames Retracted Kilograms	Side Frames Extended Kilograms	From Boom Pt. to Ground Meters
67.1 M Boom (cont.)	38.0	56.7	3,000	3,990	58
	40.0	54.7	2,660	3,590	57
	42.0	52.5	2,360	3,240	55
	44.0	50.4	2,090	2,930	54
	46.0	48.1	1,840	2,640	52
	48.0	45.8	1,620	2,380	50
	50.0	43.3	1,410	2,140	48
	52.0	40.8	1,220	1,910	46
	54.0	38.0	1,050	1,720	43
	56.0	35.2	1,530	–	41
	58.0	32.1	1,350	–	38
	60.0	28.7	1,200	–	34
	62.0	24.9	1,050	–	30
70.1 M Boom	12.5	80.8	15,450*	15,450*	71
	13.0	80.4	15,210*	15,210*	71
	14.0	79.5	14,960*	14,960*	71
	15.0	78.7	13,910	14,730*	71
	16.0	77.9	12,810	14,290*	71
	17.0	77.0	11,730	13,800*	70
	18.0	76.2	10,790	13,160	70
	19.0	75.3	9,950	12,290	70
	20.0	74.5	9,210	11,390	70
	22.0	72.8	7,960	9,880	69
	24.0	71.1	6,920	8,650	68
	26.0	69.3	6,060	7,620	68
	28.0	67.6	5,320	6,750	67
	30.0	65.8	4,700	6,010	66
	32.0	64.0	4,150	5,360	65
	34.0	62.2	3,680	4,810	64
	36.0	60.3	3,260	4,320	63
	38.0	58.4	2,890	3,880	62
	40.0	56.4	2,550	3,480	60
	42.0	54.4	2,260	3,140	59
	44.0	52.4	1,980	2,820	58
	46.0	50.3	1,730	2,530	56
	48.0	48.1	1,510	2,270	54
	50.0	45.9	1,300	2,030	52
	52.0	43.6	1,120	1,820	50
	54.0	41.1	–	1,610	48
	56.0	38.6	–	1,430	46
	58.0	35.9	–	1,250	43
	60.0	33.0	–	1,090	40
73.2 M Boom	12.8	80.9	13,530*	13,530*	74
	13.0	80.8	13,500*	13,500*	74
	11.0	80.0	12,670*	12,670*	74
	15.0	79.2	11,920*	11,920*	74
	16.0	78.4	11,780*	11,780*	74
	17.0	77.6	11,640	11,650*	74
	18.0	76.8	10,690	11,020*	73
	19.0	76.0	9,850	10,930*	73
	20.0	75.2	9,110	10,850*	73
	22.0	73.5	7,840	9,780	72
	24.0	71.9	6,810	8,540	72
	26.0	70.2	5,940	7,510	71
	28.0	68.6	5,210	6,640	70
	30.0	66.9	4,590	5,900	69
	32.0	65.1	4,040	5,260	68
	34.0	63.4	3,560	4,700	67
	36.0	61.6	3,140	4,200	66
	38.0	59.8	2,770	3,760	65
	40.0	58.0	2,440	3,380	64
	42.0	56.1	2,140	3,020	63
	44.0	54.2	1,860	2,700	61
	46.0	52.3	1,620	2,420	60
	48.0	50.3	1,390	2,150	58
	50.0	48.2	1,180	1,910	56
	52.0	46.0	1,000	1,700	55
	54.0	43.8	–	1,490	53
	56.0	41.5	–	1,310	50
	58.0	39.1	–	1,130	48

CRANE RATING DATA

⚠ WARNING

These lift ratings are invalid if the crane has been modified or altered by use of other than GENUINE AMERICAN PARTS as such modifications or alterations may affect its capacity or safe operation. See American Crane Corporation Service Bulletin #259.

The ratings in this chart are for planning purposes only. Only those ratings specifically assigned to a crane and mounted in the operator's cab or in the Operator's Manual should be used for actual operation.

Ratings in this chart are in POUNDS (Kgs) and do not exceed the percentage of tipping specified for this crane by ANSI B30.5. All ratings require that the crane be standing level on a firm uniformly supporting surface.

Do not lift loads in excess of those shown on this chart. Lifting loads in excess of those shown or operation not in accordance with good operating practice, including limitations shown on page 3499 of Operator's Manual, can cause tipping, structural damage or catastrophic failure.

Asterisk (*) areas on this chart indicate ratings which are limited by strength of material or factors other than stability (tipping).

"RADIUS IN FEET" is the horizontal distance at ground level from the crane centerline of rotation to a vertical line through the center of gravity of the suspended load.

When using the main boom fall with jib in place, the main fall ratings must be reduced by the jib effective weight shown on the jib rating chart plus twice the weight of all suspended blocks, slings, rope, etc., at the jib fall.

When using the main boom fall with boom tip extension in place, the main fall ratings must be reduced by the weight of the boom tip extension plus twice the weight of all suspended blocks, slings, rope, etc., at the boom tip extension fall.

Blocks, slings, buckets and other load carrying devices are considered part of the load. The weight of standard hoisting ropes for the rating at a given radius has been calculated as part of the boom point load and need not be considered in determining net allowable loads.

This chart was developed exclusively for use with a boom only. Under no circumstances are these ratings to be interpreted for use with a jib.

Ratings shown on this chart make no allowance for such factors as out of plumb loads, wind, poor soil conditions, improper inflation of rubber tires and dynamic effects due to excessive operating speeds. The user (operator) must exercise judgement to make allowance for these conditions. See page 3499 of Operator's Manual for detailed information.

No account is taken of the wind force on the load. This effect, which can be substantial for loads with large surface areas, must be considered by the user. In any wind it is strongly recommended that taglines be used to control the load.

MAST HOIST LINE is 17 parts of .75 inch (19 mm) diameter 6 x 26, WS, FW, RAL, IWRC, EIPS wire rope with a minimum breaking strength of 58,800 pounds (26,672 Kg).

PENDANT SUSPENSION LINE is 2 parts of 1.375 inch (35 mm) diameter EEIPS wire rope with a minimum breaking strength of 211,000 pounds (95,710 Kg).

MAIN LOAD LINE is 1 inch (25 mm) diameter 6 x 25, RRL, IWRCP, EIPS wire rope with a minimum breaking strength of 103,400 pounds (46,901 Kg).

Erection "OVER THE END" is with the boom over the idler end with idler tumblers blocked (See Operator's Manual for blocking instructions). Erection "OVER THE SIDE" is with the boom 90° to the side frames and with the side frames extended. Blocks, slings and other load carrying devices must be on the ground during erection.

LOAD HOISTING INFORMATION

Maximum Lifting Capacity in Pounds	Minimum Parts of Line	Maximum Hoisting Distance in Feet	
		Main (Front)	Aux. (rear)
250,000	9	160	160
236,000	8	180	180
206,500	7	200	200
177,000	6	240	240
147,500	5	290	290
118,000	4	360	360
88,500	3	480	480
59,000	2	730	730
29,500	1	1,460	1,460

Maximum Lifting Capacity in Kilograms	Minimum Parts of Line	Maximum Hoisting Distance in Meters	
		Main (Front)	Aux. (rear)
113,400	9	49	49
107,049	8	55	55
93,668	7	61	61
80,287	6	73	73
66,906	5	88	88
53,524	4	110	110
40,143	3	146	146
26,762	2	223	223
13,381	1	445	445

BOOM COMPOSITION CHART

Boom Length		25' (7.6 M) 59H Inner	10' (3.0 M) 59H Center	20' (6.1 M) 59H Center	40' (12.2 M) 59H Center	25' (7.6 M) 59H Outer
Feet	Meters					
50	15.2	1	0	0	0	1
60	18.3	1	1	0	0	1
70	21.3	1	0	1	0	1
80	24.4	1	1	1	0	1
90	27.4	1	0	0	1	1
100	30.5	1	1	0	1	1
110	33.5	1	0	1	1	1
120	36.6	1	1	1	1	1
130	39.6	1	0	0	2	1
140	42.7	1	1	0	2	1

Boom Length		25' (7.6 M) 59H Inner	10' (3.0 M) 59H Center	20' (6.1 M) 59H Center	40' (12.2 M) 59H Center	25' (7.6 M) 59H Outer
Feet	Meters					
150	45.7	1	0	1	2	1
160	48.8	1	1	1	2	1
170	51.8	1	0	0	3	1
180	54.9	1	1	0	3	1
190	57.9	1	0	1	3	1
200	61.0	1	1	1	3	1
210	64.0	1	0	0	4	1
220	67.1	1	1	0	4	1
230	70.1	1	0	1	4	1
240	73.2	1	1	1	4	1

MAXIMUM BOOM & JIB SELF-ERECTION DATA

Jib	Over the End				Over the Side			
	Boom Length		Jib Length		Boom Length		Jib Length	
	Feet	Meters	Feet	Meters	Feet	Meters	Feet	Meters
#9HL	240	73.2	0	0.0	230	70.1	0	0.0
	230	70.1	40	12.2	220	67.1	0	0.0
	220	67.1	80	24.4	210	64.0	40	12.2
	–	–	–	–	200	61.0	50	15.2
	–	–	–	–	190	57.9	60	18.3
	–	–	–	–	180	54.9	70	21.3

WEIGHTS

	LBS.	KG
Lifting Crane with standard counterweight, 50' (15.2 mm) boom with offset tip, transport package, 3rd drum and 38" (965 mm) shoes	209,740	95,137
Lifting crane equipped as above and 44" (1,117 mm) shoes	213,030	96,629
Counterweight Including:	52,150	23,655
Basic	31,000	14,061
Overlay	20,000	9,072
2 Removal Cylinders	1,150	522
Crane boom outer (six sheave)	3,260	1,480
Crane boom inner (and misc.)	4,345	1,971
Crawler side frames 38" (965 mm) shoes	70,590	32,020
Crawler Side Frames 44" (1,117 mm) shoes	73,880	33,500
Travel weight includes upper, carbody, transportation package, boom inner, counterweight handling sheaves and third drum	83,740	37,985
Second swing motor	580	263

GROUND PRESSURES

Lifting crane with 50 ft. (15.2 mm) boom with offset tip and standard counterweight.

38" (965 mm) shoes	44" (1,117 mm) shoes
10.5 PSI	9.03 PSI

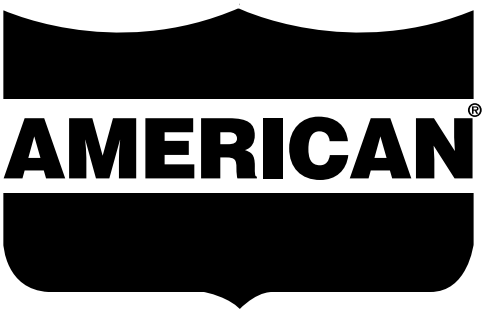

HC 125 HYDRAULIC CRAWLER CRANE
GENERAL DIMENSIONS

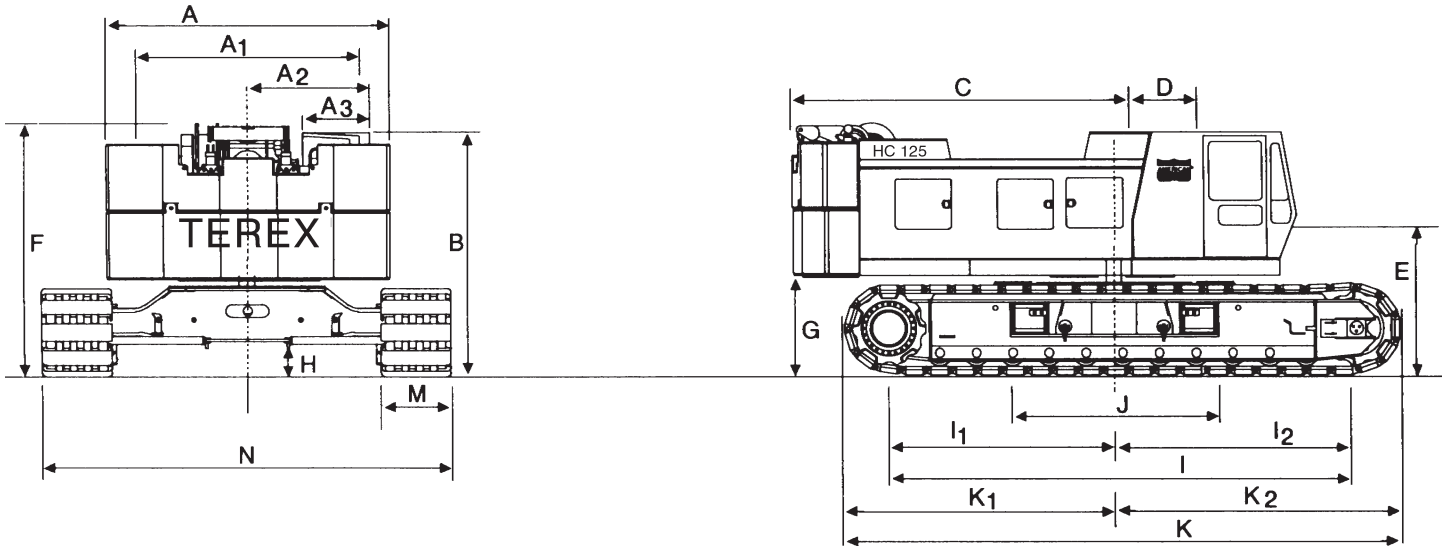

		FEET	MM
A	Width of counterweight	14’-0”	4,267
A_1	Width of machinery cab	11’-5”	3,480
A_2	Centerline of machine to outside of operator’s cab	6’-0”	1,829
A_3	Width of operator’s cab	3’-4”	1,016
B	Height over operator’s cab	12’-0”	3,658
C	Tail swing w/WorkHorse retracted	16’-3”	4,953
D	Center rotation to boom feet	3’-6”	1,066
E	Ground to center of boom foot	6’-8”	2,032
F	Height over boom hoist	12’ 3-9/16”	3,748
G	Ground to bottom of counterweight	4’ 6-3/4”	1,391
H	Minimum ground clearance	1’ 7-1/2”	495
I	Center to center of crawler tumblers	20’ 10-5/16”	6,358
I_1	Center of drive tumbler to center of rotation	9’ 10-3/4”	3,016

		FEET	MM
I_2	Center of idler tumbler to center of rotation	10’ 11-5/8”	3,342
J	Width of carbody (including vertical jacks)	10’-10”	3,300
K	Overall length of crawlers	24’ 7-9/16”	7,507
K_1	Over drive tumbler to center of rotation	12’ 0-1/2”	3,670
K_2	Over idler tumbler to center of rotation	12’ 7-1/16”	3,836
M	Width of tread shoe (standard)	38”	965
	(optional)	44"	1,118
N	Overall width of crawlers		
	38” (966 mm) shoes retracted	15’-2”	4,623
	38” (966 mm) shoes extended	18’-5”	5,613
	44” (1,118 mm) shoes retracted	15’-8”	4,775
	44” (1,118 mm) shoes extended	18’-11”	5,766
N_1	Length over crawler axles	15’-2”	4,623

AMERICAN MODEL HC 125 WORKING RANGES

BOOM ANGLE DIAGRAM

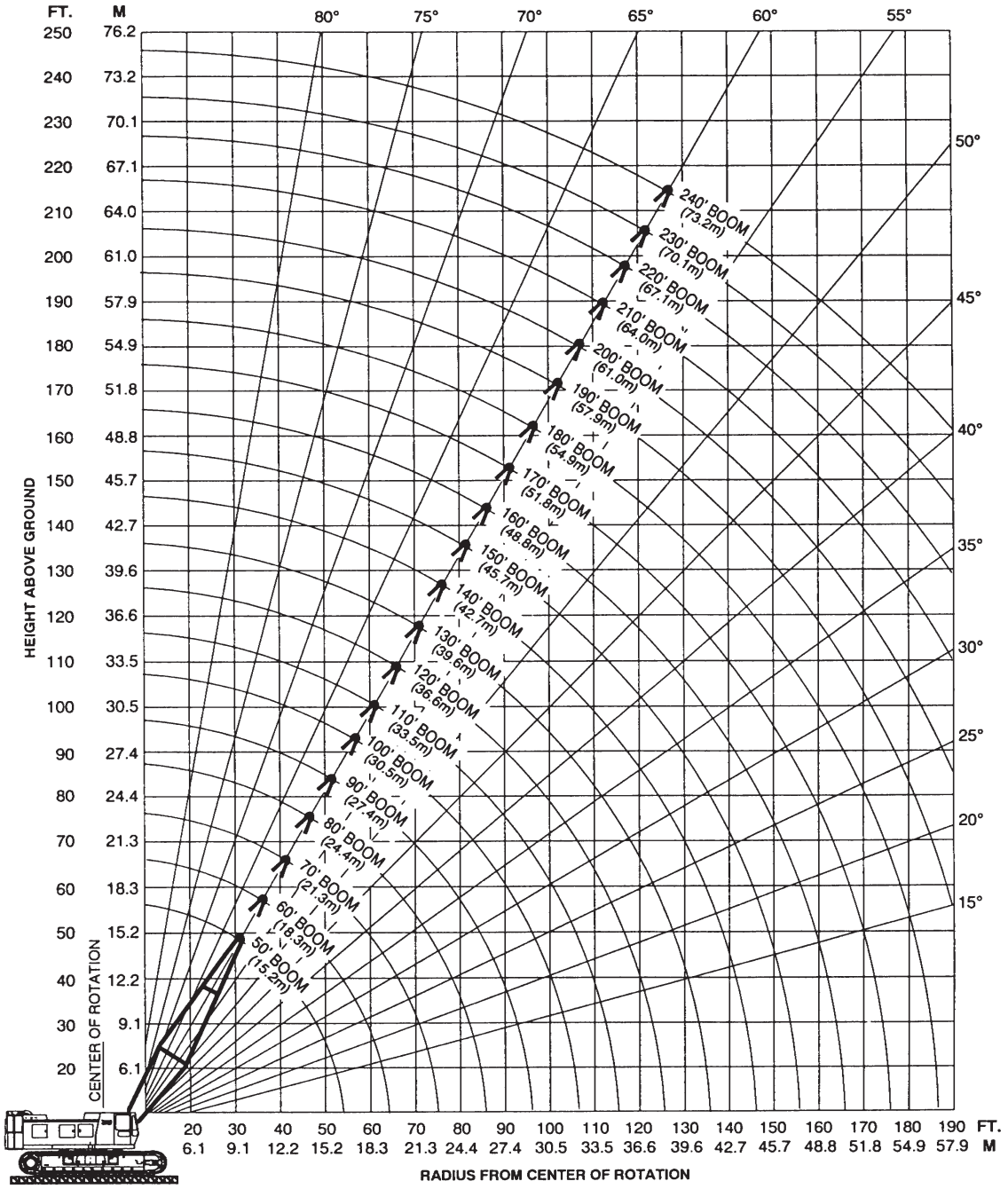

For more information, product demonstration, or details on sales, lease and rental plans, please contact your local Terex American Crane Distributor.

We reserve the right to amend these specifications at any time without notice. The only warranty applicable is our standard written warranty applicable to the particular product and sale. We make no other warranty, expressed or implied.

TEREX CRANES

AMERICAN CRANE CORPORATION
202 Raleigh Street • Wilmington, NC 28412 USA
(910) 395-8500 • FAX: (910) 395-8538

Terex Cranes, Inc. 1999

Litho in U.S.A.
2.5J899S50

FMC

Lifting Capacities

PCSA Class 10-213

GENERAL INFORMATION ONLY

Link-Belt®

Eighty Series Hydraulic Rough Terrain Crane

HSP-8050 50-ton *(45.36 metric ton)*

4-Section Boom

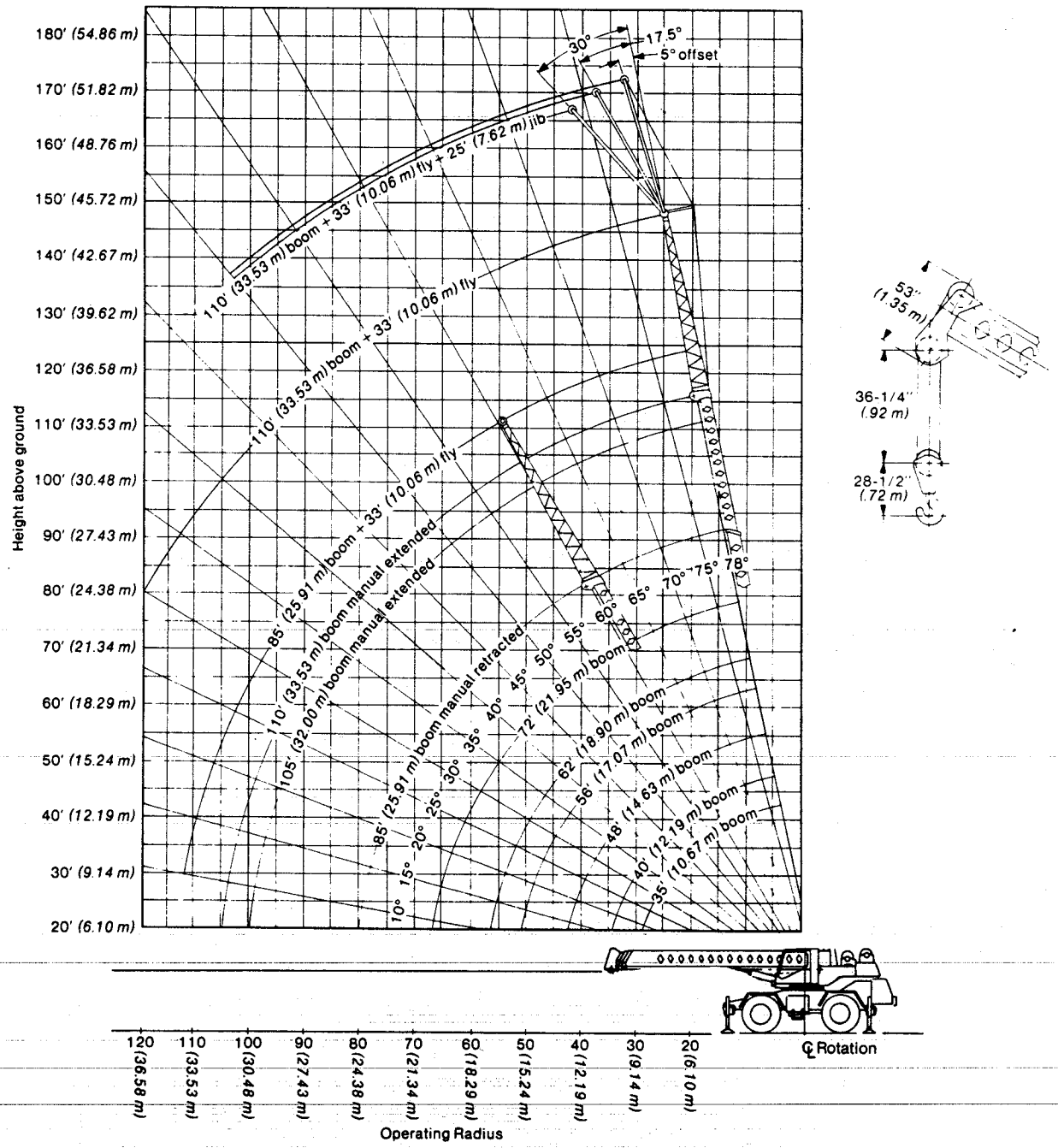

Note: Boom and fly and jib geometry shown are for unloaded condition and machine standing level on firm supporting surface. Boom deflection and subsequent radius and angle change must be accounted for when applying load to hook.

CAUTION: This material is supplied for reference only. Operator MUST refer to in-cab capacity plate to determine allowable machine lifting capacities and operating procedures.

HSP-8050 Lifting Capacities

Refer to **Operating Instructions** page 4

35′-110′ *(10.67-33.53 m)* 4-section boom

Capacities On Outriggers① Manual Section Retracted

Load radius	35′ *(10.67 m)* Front	35′ *(10.67 m)* 360°	40′ *(12.19 m)* Front	40′ *(12.19 m)* 360°	48′ *(14.63 m)* Front	48′ *(14.63 m)* 360°	56′ *(17.07 m)* Front	56′ *(17.07 m)* 360°	62′ *(18.90 m)* Front	62′ *(18.90 m)* 360°	72′ *(21.95 m)* Front	72′ *(21.95 m)* 360°	85′ *(25.91 m)* Front	85′ *(25.91 m)* 360°
10′ *3.05 m*	100,000 *45 360*	100,000 *45 360*	72,100 *32 705*	72,100 *32 705*	70,800 *32 115*	70,800 *32 115*	68,100 *30 890*	68,100 *30 890*						
12′ *3.66 m*	98,300 *44 589*	98,300 *44 589*	72,100 *32 705*	72,100 *32 705*	70,800 *32 115*	70,800 *32 115*	68,100 *30 890*	68,100 *30 890*	67,600 *30 663*	67,600 *30 663*				
15′ *4.57 m*	84,000 *38 102*	84,000 *38 102*	71,500 *32 432*	71,500 *32 432*	70,800 *32 114*	70,800 *32 114*	68,100 *30 890*	68,100 *30 890*	59,400 *26 944*	59,400 *26 944*	51,800 *23 496*	51,800 *23 496*		
20′ *6.10 m*	64,300 *29 166*	64,300 *29 166*	64,300 *29 166*	64,300 *29 166*	64,300 *29 166*	64,300 *29 166*	57,200 *25 946*	57,200 *25 946*	48,900 *22 180*	48,900 *22 180*	43,200 *19 596*	43,200 *19 596*	36,600 *16 602*	36,600 *16 602*
25′ *7.62 m*	49,800 *22 589*	49,800 *22 589*	49,800 *22 589*	49,800 *22 589*	49,800 *22 589*	49,800 *22 589*	48,100 *21 818*	48,100 *21 818*	41,300 *18 734*	41,300 *18 734*	36,800 *16 692*	36,800 *16 692*	30,500 *13 835*	30,500 *13 835*
30′ *9.14 m*			40,300 *18 279*	36,800 *16 692*	40,300 *18 279*	36,800 *16 692*	40,300 *18 279*	36,800 *16 692*	35,500 *16 103*	35,500 *16 103*	31,800 *14 424*	31,800 *14 424*	25,800 *11 703*	25,800 *11 703*
35′ *10.67 m*					32,400 *14 696*	27,500 *12 474*	32,400 *14 696*	27,500 *12 474*	32,400 *14 696*	27,500 *12 474*	27,800 *12 602*	27,500 *12 474*	22,200 *10 069*	22,200 *10 069*
40′ *12.19 m*					25,200 *11 430*	21,300 *9 661*	25,300 *11 476*	21,300 *9 661*	25,400 *11 521*	21,300 *9 661*	24,500 *11 113*	21,300 *9 661*	19,400 *8 800*	19,400 *8 800*
45′ *13.72 m*							20,400 *9 253*	17,100 *7 757*	20,400 *9 253*	17,100 *7 757*	20,400 *9 253*	17,100 *7 757*	17,100 *7 757*	17,100 *7 757*
50′ *15.24 m*							16,600 *7 529*	13,900 *6 305*	16,600 *7 529*	13,900 *6 305*	16,600 *7 529*	13,900 *6 305*	15,400 *6 985*	13,900 *6 305*
55′ *16.76 m*									13,900 *6 305*	11,500 *5 216*	13,900 *6 305*	11,500 *5 216*	13,800 *6 260*	11,500 *5 216*
60′ *18.29 m*											11,700 *5 307*	9,600 *4 354*	11,700 *5 307*	9,600 *4 354*
65′ *19.81 m*											9,900 *4 490*	7,900 *3 583*	9,900 *4 490*	7,900 *3 583*
70′ *21.34 m*													8,400 *3 810*	6,700 *3 039*
80′ *24.38 m*													6,000 *2 721*	4,500 *2 041*
90′ *27.43 m*														
100′ *30.48 m*														
110′ *33.53 m*														

77′ *(23.47 m)* boom plus 33′ *(10.06 m)* fly			85′ *(25.91 m)* boom plus 33′ *(10.06 m)* fly		
Boom angle	Front	360°	Boom angle	Front	360°
See Note ②			See Note ②		
76°	22,200 *10 070*	22,200 *10 070*	77°	18,500 *8 392*	18,500 *8 392*
74°	22,200 *10 070*	22,200 *10 070*	75°	17,500 *7 938*	17,500 *7 938*
71°	20,200 *10 070*	20,000 *10 070*	72°	15,500 *7 031*	15,500 *7 031*
68°	18,900 *8 573*	18,900 *8 573*	70°	13,900 *6 305*	13,900 *6 305*
66°	17,300 *7 847*	17,300 *7 847*	67°	12,400 *5 625*	12,400 *5 625*
63°	15,400 *6 985*	15,400 *6 985*	64°	10,900 *4 944*	10,900 *4 944*
60°	14,300 *6 486*	13,600 *6 214*	62°	9,600 *4 355*	9,600 *4 355*
56°	13,200 *5 988*	11,600 *5 261*	59°	8,600 *3 901*	8,600 *3 901*
53°	11,900 *5 397*	9,900 *4 490*	56°	7,700 *3 493*	7,700 *3 493*
50°	10,400 *4 717*	8,600 *3 901*	53°	6,900 *3 130*	6,900 *3 130*
42°	8,000 *3 628*	6,500 *2 948*	46°	5,600 *2 540*	5,600 *2 540*
33°	6,200 *2 812*	4,900 *2 044*	39°	4,600 *2 087*	4,400 *1 996*
21°	4,600 *2 086*	3,400 *1 542*	30°	3,900 *1 769*	3,400 *1 542*
			17°	3,400 *1 542*	2,500 *1 133*

Wire rope application	Size and type used	Wire rope description
Main winch Auxiliary winch	3/4″ *(19 mm)* diameter, Type "N" 3/4″ *(19 mm)* diameter, Type "N"	Type "N" - 6 x 25 (6 x 19 class) filler wire, extra improved plow steel, preformed, independent wire rope core, right lay, regular lay.

GENERAL INFORMATION ONLY

Drum wire rope capacities

Wire rope layer	Main and auxiliary drum 17″ *(0.43 m)* root diameter smooth and grooved lagging — 3/4″ *(19 mm)* wire rope: Rope per layer, Feet	Rope per layer, *meters*	Total wire rope, Feet	Total wire rope, *meters*
1	97	*29.57*	97	*29.57*
2	111	*33.83*	208	*63.40*
3	114	*34.75*	322	*98.15*
4	122	*37.19*	444	*135.33*
5	130	*39.62*	574	*174.96*
6	139	*42.37*	713	*217.32*
7	140	*42.67*	853	*259.99*

Footnotes

① All capacities on outriggers are based on outriggers fully extended with boom sections extended equal distance.

② Calculating capacities for extended or retracted boom plus fly must be based on boom angle only for boom lengths other than those listed. See Operating Instructions Number 14.

③ See Operating Instructions, set-up Number 4.

Capacities On Tires

Load Radius	Max. boom length	Pick & Carry③ Over Front	Stationary 360°	Stationary Over Front
10′ *3.05 m*	35′ *10.67 m*	58,000 *26 309*	42,100 *19 097*	57,300 *25 991*
12′ *3.66 m*	35′ *10.67 m*	50,600 *22 952*	33,700 *15 286*	50,500 *22 907*
15′ *4.57 m*	35′ *10.67 m*	42,100 *19 097*	23,100 *10 478*	42,700 *19 369*
20′ *6.10 m*	35′ *10.67 m*	32,200 *14 606*	14,000 *6 350*	32,700 *14 833*
25′ *7.62 m*	35′ *10.67 m*	22,400 *10 160*	9,100 *4 127*	22,600 *10 251*
30′ *9.14 m*	40′ *12.19 m*	15,900 *7 212*	6,000 *2 721*	15,900 *7 212*
35′ *10.67 m*	40′ *12.19 m*	11,900 *5 398*	3,800 *1 723*	11,900 *5 398*
40′ *12.19 m*	48′ *14.63 m*	9,100 *4 127*	— —	9,100 *4 127*
45′ *13.72 m*	56′ *17.07 m*	7,000 *3 175*	— —	7,000 *3 175*
50′ *15.24 m*	56′ *17.07 m*	5,400 *2 449*	— —	5,400 *2 449*
55′ *16.76 m*	62′ *18.90 m*	4,200 *1 904*	— —	4,200 *1 904*
60′ *18.29 m*	72′ *21.95 m*	3,200 *1 451*	— —	3,200 *1 451*

HSP-8050 Lifting Capacities

35′-110′ *(10.67-33.53 m)* 4-section boom

Refer to **Operating Instructions** page 4

Capacities① On Outriggers **Manual Section Extended**

Load radius	105′ *(32.00 m)*			110′ *(33.53 m)*			110′ *(33.53 m)* boom plus 33′ *(10.06 m)* fly		
	Boom angle	Front	360°	Boom angle	Front	360°	Boom angle	Front	360°
	See Note ②			See Note ②			See Note ③		
25′ *7.62 m*	76°	20,200 *9 163*	20,200 *9 163*	77°	19,000 *8 618*	19,000 *9 027*			
30′ *9.14 m*	73°	20,200 *9 163*	20,200 *9 163*	74°	18,500 *8 392*	18,500 *8 392*			
35′ *10.67 m*	71°	20,200 *9 163*	20,200 *9 163*	72°	17,600 *8 121*	17,600 *8 121*	76°	9,400 *4 264*	9,400 *4 264*
40′ *12.19 m*	68°	18,200 *8 256*	18,200 *8 256*	69°	15,500 *7 030*	15,500 *7 030*	74°	9,400 *4 264*	9,400 *4 264*
45′ *13.72 m*	65°	16,400 *7 439*	16,400 *7 439*	66°	13,700 *6 214*	13,700 *6 214*	72°	9,000 *4 082*	9,000 *4 082*
50′ *15.24 m*	62°	15,000 *6 804*	15,000 *6 804*	63°	12,100 *5 488*	12,100 *5 488*	70°	8,400 *3 810*	8,400 *3 810*
55′ *16.76 m*	59°	13,800 *6 260*	13,100 *5 942*	60°	10,700 *4 853*	10,700 *4 853*	68°	8,000 *3 629*	8,000 *3 629*
60′ *18.29 m*	55°	12,700 *5 760*	11,100 *5 034*	57°	9,700 *4 400*	9,700 *4 400*	66°	7,300 *3 311*	7,300 *3 311*
65′ *19.81 m*	52°	11,500 *5 216*	9,500 *4 308*	54°	8,700 *3 946*	8,700 *3 946*	64°	6,500 *2 948*	6,500 *2 948*
70′ *21.34 m*	48°	9,900 *4 490*	8,200 *3 719*	50°	7,800 *3 357*	7,800 *3 357*	61°	5,700 *2 586*	5,700 *2 586*
80′ *24.38 m*	39°	7,500 *3 401*	6,100 *2 767*	43°	6,400 *2 903*	6,000 *2 721*	56°	4,600 *2 087*	4,600 *2 087*
90′ *27.43 m*	29°	5,800 *2 631*	4,500 *2 040*	34°	5,500 *2 495*	4,400 *1 995*	51°	3,600 *1 633*	3,600 *1 633*
100′ *30.48 m*	12°	4,400 *1 996*	3,200 *1 451*	22°	4,300 *1 950*	3,200 *1 451*	46°	2,800 *1 270*	2,800 *1 270*
110′ *33.53 m*							39°	2,100 *953*	2,100 *953*
120′ *36.58 m*							32°	1,500 *680*	1,500 *680*

① All capacities on outriggers are based on outriggers fully extended with boom sections extended equal distance.
② Calculating capacities for extended or retracted boom with manual section extended must be based on boom angle only. See Operating Instructions Number 13.
③ Calculating capacities for extended or retracted boom with manual section extended plus fly must be based on boom angle only. See Operating Instructions Number 15.

Jib Capacities

33′ *(8.84 m)* **fly** plus **25′** *(7.62 m)* **jib**

Boom angle	Jib Offset 5°	Jib Offset 17.5°	Jib Offset 30°
78°	5,100 *2 313*	5,100 *2 313*	4,200 *1 905*
75°	5,100 *2 313*	5,100 *2 313*	4,000 *1 814*
70°	5,100 *2 313*	4,900 *2 223*	3,600 *1 633*
65°	4,500 *2 041*	4,100 *1 860*	3,400 *1 542*
60°	3,700 *1 678*	3,300 *1 497*	2,800 *1 270*
55°	3,000 *1 361*	2,700 *1 225*	2,400 *1 089*
50°	2,500 *1 134*	2,300 *1 043*	2,000 *907*

HSP-8050 hydraulic circuit pressure settings

Circuit	Function	Pressure
Main	Boom hoist	2,900 p.s.i. *(200.0 Bars)*
	Wire rope hoist	2,750 p.s.i. *(189.66 Bars)*
Secondary	Swing	1,500 p.s.i. *(103.45 Bars)* at port relief
	Innermid telescope Steering	2,500 p.s.i. *(172.41 Bars)*
	Outermid telescope	2,700 p.s.i. *(186.21 Bars)*
	Outriggers	2,700 p.s.i. *(186.21 Bars)*
Charge Pump	Winch brake and clutch	1,500 p.s.i. *(103.45 Bars)*

Line Speeds and Pulls

Layer	Speed	Main or auxiliary winch -17″ *(0.43 m)* drum: Line Speeds F.p.m.	Line Speeds *m/min.*	Available Line Pulls Lbs.	Available Line Pulls *kgs.*
First	Low	172	*52.43*	15,870	*7 199*
	High	364	*110.95*	7,520	*3 411*
Second	Low	187	*57.00*	14,630	*6 636*
	High	394	*120.09*	6,930	*3 143*
Third	Low	201	*61.26*	13,580	*6 160*
	High	425	*129.54*	6,430	*2 917*
Fourth	Low	216	*65.84*	12,660	*5 743*
	High	456	*138.99*	6,000	*2 722*
Fifth	Low	230	*70.10*	11,860	*5 380*
	High	487	*148.44*	5,620	*2 549*
Sixth	Low	245	*74.68*	11,160	*5 062*
	High	517	*157.58*	5,280	*2 395*
Seventh	Low	260	*79.25*	10,530	*4 776*
	High	548	*167.03*	4,990	*2 264*

Tire Inflation

Tires	Ply	Pressure
26.5 x 25	24	75 p.s.i. *(5.17 Bars)*
29.5 x 25	22	60 p.s.i. *(2.14 Bars)*

GENERAL INFORMATION ONLY

FMC

Warning and Operating Instructions HSP-8050

General:

1. Rated lifting capacities in pounds as shown on lift chart pertain to this machine as originally manufactured and normally equipped by FMC Corporation, Construction Equipment Group. Modifications to the machine or use of optional equipment other than that specified can result in a reduction of capacity.
2. Construction equipment can be dangerous if improperly operated or maintained. Operation and maintenance of this machine must be in compliance with the information in the operator's parts and safety manuals supplied with this machine. If these manuals are missing, order replacements through the distributor.
3. The operator and other personnel associated with this machine shall fully acquaint themselves with the latest applicable American National Standards Institute (ANSI) Safety Standards for cranes.
4. All capacities are in pounds with metric equivalent in italic.

Set-Up:

1. Capacities included in this chart are the maximum allowable crane capacities and are based on the machine standing level on firm supporting surface under ideal job conditions. Depending on the nature of the supporting surface, it may be necessary to have structural supports under the outrigger floats or tires to spread the load to a larger bearing surface.
2. When making lifts on outriggers, outrigger beams must be fully extended with tires free of supporting surface.
3. Eight parts of ¾" *(19 mm)* diameter Type "N" wire rope required to lift maximum 100,000 lbs. *(45 360 kg)* rated load.
4. Crane Capacities on tires depend on tire capacity, condition of tires, and tire pressure. On-tire picks require lifting from main boom head only on a smooth and level surface. Pick and carry operations (creep), are restricted to 1.0 m.p.h. *(1.61 km/h)* with the boom centered over front, the travel swing lock engaged and the load restrained from swinging. Lifts with the manual extended, fly or fly/jib combination erected are prohibited.
5. When making lifts on rubber, tires must be inflated to the recommended pressure and power sections must be equally extended.

Operation:

1. Rated lifting capacities at rated radius shall not be exceeded. Do not tip the machine to determine allowable loads. For clamshell and concrete bucket operation, weight of bucket and load shall not exceed 80% of rated lifting capacities. Clamshell bucket weight including bucket content is restricted to a maximum of 7,000 pounds *(3175 kg)* with a maximum boom length of 56 feet *(17.07 m)* and a minimum boom angle of 35°. Manual extended, fly or fly/jib combinations are prohibited for clam work.
2. The crane capacities shown on outriggers do not exceed 85% of the tipping loads and crane capacities shown on tires do not exceed 75% of the tipping loads as determined by SAE crane stability test code J-765a. Those capacities above the heavy bold line indicate capacities based on factors other than those which would cause a tipping condition.
3. Do not operate at boom lengths or beyond radii where no capacities are shown. Machine may overturn without any load on the hook.
4. To determine capacities in-between those shown on charts, refer to the rated lifting capacity of the next longer and next shorter booms for the same radius. The lesser of the two capacities will apply.
5. When making lifts at a load radius not shown on charts, use the next longer radius to determine allowable capacity.
6. Crane capacities are based on freely suspended loads and make no allowance for such factors as the effect of wind, sudden stopping of loads, supporting surface conditions, inflation of tires, and operating speeds. Operator must reduce load ratings to take such conditions into account. Deductions from rated capacities must be made for weight of hook block, weighted ball/hook, sling, spreader bar, fly or other suspended gear.
7. Rated lifting capacities are based on correct reeving. Deduction must be made for excessive reeving. Any reeving over minimum required is considered excessive and must be taken into account. Use working range plate to estimate the extra feet of rope and then deduct 1 lb. *(.4536 kg)* for each foot of wire rope before attempting to lift a load.
8. The following deductions from rated main boom capacities must be made if the machine is equipped with the following:
   a. auxiliary lifting sheave - 200 lbs. *(91 kg.)*
   b. 33' *(10.06 m)* one-piece fly stowed on boom — 700 lbs. *(318 kg)*.
   c. 33' *(10.06 m)* one-piece fly in working position — 1,800 lbs. *(816 kg)*
   d. 33' *(10.06 m)* fly plus 25' *(7.62 m)* jib stowed on boom — 1,100 lbs. *(499 kg)*
   e. 33' *(10.06 m)* fly plus 25' *(7.62 m)* jib in working position — 4,400 lbs. *(1 996 kg)*
   f. 25' *(7.62 m)* jib in working position and picking from fly tip — 1,900 lbs. *(862 kg)*
9. Powered boom length is from 35' *(10.67 m)* to 85' *(25.91 m)*.
10. Extension or retraction of the boom with loads within the limits of the applicable rating chart may be attempted. The ability to telescope loads is limited by hydraulic pressure, boom angle, boom length, boom lubrication, etc.
11. Do not move load to radii or boom lengths greater than those specified on applicable chart.
12. Effective length of boom with auxiliary lifting sheave is length shown on boom length indicator plus 2' *(0.61 m)*.
13. The rated loads for the manual extended are determined by boom angle only for boom lengths other than 105' *(32.00 m)* and 110' *(33.53 m)* as follows: For boom lengths less than 105' *(32.00 m)*, the rated loads are determined by boom angle only in the column headed 105' *(32.00 m)*. For boom lengths between 105' *(32.00 m)* and 110' *(33.53 m)*, the rated loads are determined by boom angle only in the column headed 110' *(33.53 m)* manual extended. For angles not shown, use next lower boom angle to determine allowable capacity.
14. The rated loads for the manual retracted with 33' *(10.06 m)* fly are determined by boom angle only for boom lengths other than 110' *(33.53 m)* and 118' *(35.97 m)* as follows: For boom lengths with fly and manual retracted less than 110' *(33.53 m)*, the rated loads are determined by boom angle only in the column headed 110' *(33.53 m)* manual retracted with fly. For boom lengths with fly and manual retracted between 110' *(33.53 m)* and 118' *(35.97 m)*, the rated loads are determined by boom angle only in the column headed 118' *(35.97 m)*. For angles not shown, use the next lower boom angle to determine allowable capacity.
15. For boom lengths with fly less than 143' *(44 m)* with manual extended, the rated loads are determined by boom angle only in the column headed 143' *(44 m)*. For angles not shown, use the next lower boom angle to determine allowable capacity.
16. The 25' *(8 m)* jib capacities are based on main boom angle, regardless of main boom length. For angles not shown, use next lower boom angle to determine allowable capacity. Capacity values are for 360 degree operation. Warning: Do not lower 25' *(8 m)* jib in working position below 50 degrees unless boom is fully retracted.
17. The 35' *(10.67 m)* boom length capacities are based on boom fully retracted. If not fully retracted, do not exceed ratings for the 40' *(12.19 m)* boom length.

Definitions:

1. Load Radius: Horizontal distance from a projection of the axis of rotation to the supporting surface before loading to the center of the vertical hoist line or tackle with load applied.
2. Loaded Boom Angle: The angle between the boom base section and the horizontal after lifting the load at the rated radius. The boom angle, before loading, should be greater to account for deflections.
3. Working Area: Area measured in a circular arc about the center line of rotation as shown on the working area diagram.
4. Freely Suspended Load: Load hanging free with no direct external force applied except by the hoist line.
5. Side Load: Horizontal side force applied to the lifted load either on the ground or in the air.

GENERAL INFORMATION ONLY

Working Areas HSP-8050

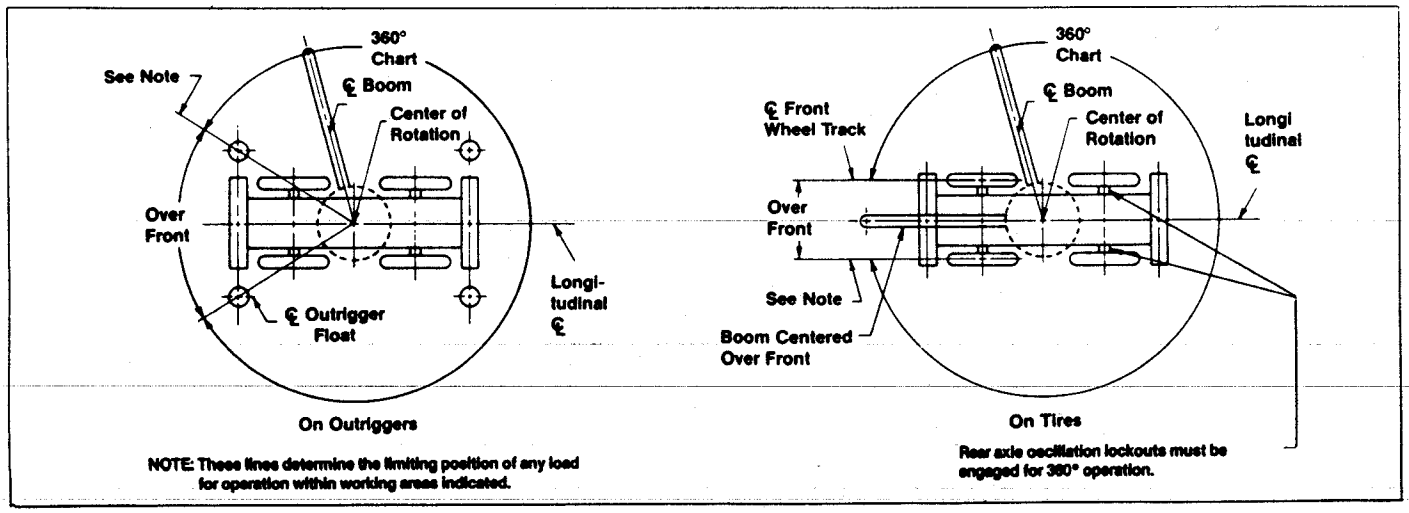

We are constantly improving our products and therefore reserve the right to change designs and specifications.