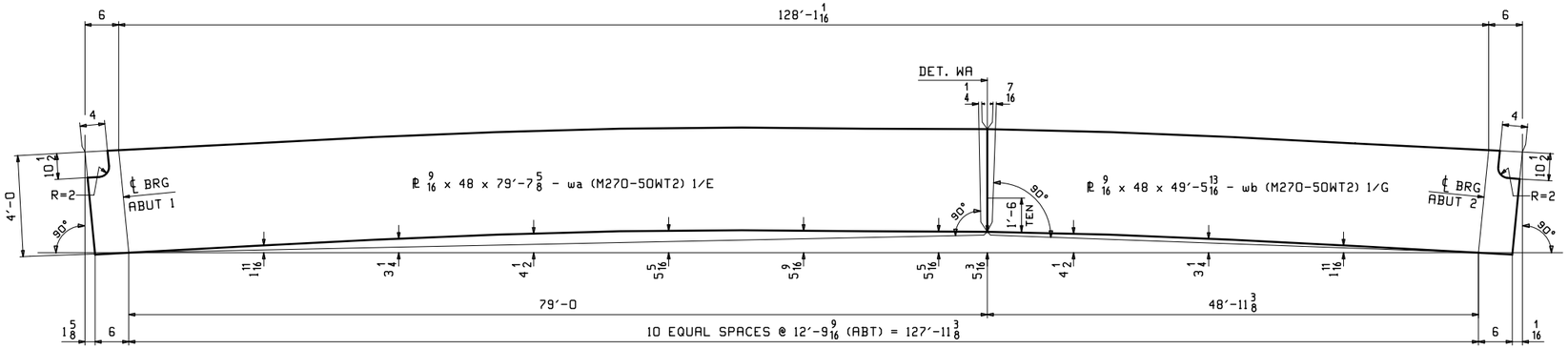

CAMBER DIAGRAM FOR 1G1, 2G2, 3G3, 4G4 & 5G5

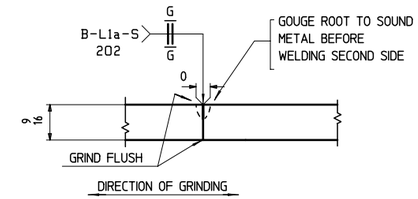

WEB PLATE SPLICE DETAIL "WA"

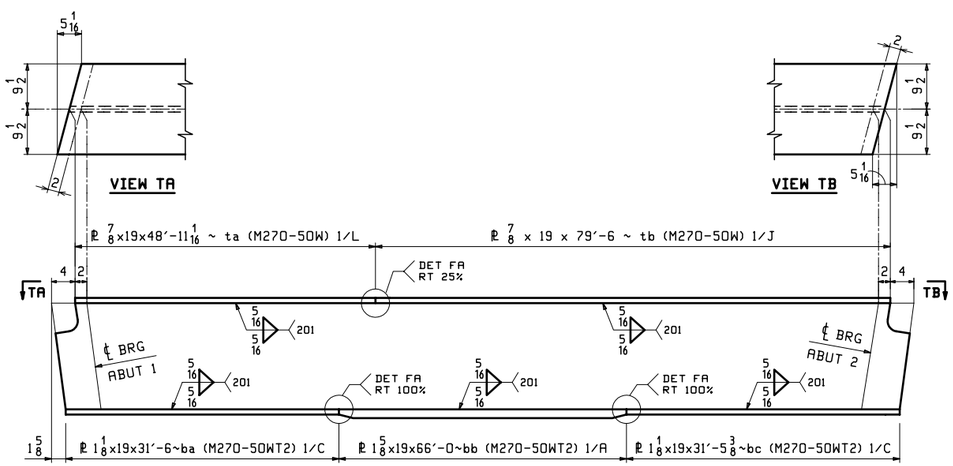

FLANGE DIAGRAM FOR 1G1, 2G2, 3G3, 4G4 & 5G5

FLG THK	"A"
7/8	1/4
1 1/8	3/8

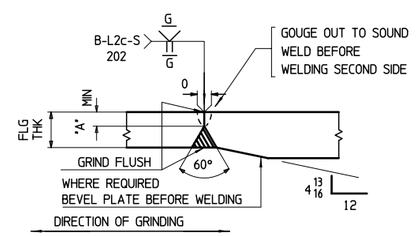

FLANGE PLATE SPLICE DETAIL "FA"

NOTES:
1. ALL MATERIAL TO BE AASHTO M270-50W
2. "T2" DENOTES MAT'L SUBJECT TO CHARPY V-NOTCH TESTING (ZONE 2)
3. TRIM ENDS OF GIRDERS AFTER ALL WELDING IS COMPLETED.
4. FOR GENERAL NOTES SEE DWG GN1.

REV.	DATE	REMARKS	DWN	CHK	APVL	SHOP
0						

MATERIAL:	SURFACE PREP. & PAINT:	HOLES:	SHOP BOLTS:
M270-50W (UN)	SEE GN1		

DESCRIPTION: CAMBER & FLANGE DIAGRAMS

CASCO BAY STEEL STRUCTURES, INC.
1 WALLACE AVE. PHONE (207) 780-6722
SOUTH PORTLAND, ME 04106 FAX. (207) 780-6726
TENSOR 3244

STRUCTURE: VT RTE 15 OVER CENTERVILLE
BRIDGE #42
HYDE PARK
LAMOILLE COUNTY

DRAWN: JAS	DATE: 02/27	
CHKD: DO	DATE: 3/7/14	
LOCATION: HYDE PARK, VT	JOB NO. 565	DWG NO. C1
PROJ NO. STP CULV (26)		REV. △
CUSTOMER: VDOT		

DO Fri, Mar 7, 2014 04:59:14 PM /users/jas/3244-C1 Rev0

GENERAL NOTES

CONSTRUCTION & DESIGN SPECIFICATIONS

1. ALL MATERIAL AND CONSTRUCTION TO BE IN ACCORDANCE WITH THE STATE OF VERMONT AGENCY OF TRANSPORTATION STANDARD SPECIFICATIONS FOR CONSTRUCTION (2011) WITH ITS LATEST REVISIONS, AND THE AASHTO LRFD BRIDGE DESIGN SPECIFICATIONS, 6TH EDITION (WITH INTERIMS THROUGH 2012).

MATERIAL SPECIFICATIONS

1. ALL STRUCTURAL STEEL TO BE AASHTO M270 (ASTM A709) GRADE 50W, UNLESS NOTED.

2. MATERIAL NOTES "T2" ON DETAIL DRAWINGS SHALL BE CHARPY V-NOTCH TESTED IN ACCORDANCE WITH THE REQUIREMENTS OF VERMONT STANDARD SPECIFICATIONS SECTION 714.01.

3. HIGH STRENGTH BOLTS SHALL BE 7/8" DIAMETER, ASTM A325 (TYPE 3), IN 15/16" DIAMETER HOLES. NUTS SHALL BE A563 (TYPE 3) GRADE C3, AND WASHERS SHALL BE F436 (TYPE 3).

   BOLTS & NUTS SHALL BE ROTATIONAL CAPACITY TESTED. DO NOT MIX BOLTS & NUTS FROM DIFFERENT CONTAINERS UNLESS ALL BOLTS & NUTS HAVE THE SAME LOT NUMBER.

FABRICATION

1. ALL HOLES SHALL BE DRILLED FULL SIZE, UNLESS NOTED.

WELDING

1. THE CONFIGURATION OF THE WELD JOINTS AND ALL WELDING PROCEDURES SHALL BE IN ACCORDANCE WITH AASHTO/AWS D1.5-10 BRIDGE WELDING CODE; IN ADDITION TO THE PROVISIONS OF VERMONT STANDARD SPECIFICATIONS SECTION 506.10. ALL WELDING WILL BE DETAILED TO PRE-QUALIFIED JOINTS, UNLESS PROHIBITED BY THE DESIGNER.

2. WELDING OF MAIN LOAD CARRYING MEMBERS AND ATTACHMENTS SHALL BE PERFORMED USING THE AUTOMATIC SUBMERGED ARC & SHIELDED METAL ARC PROCESSES. SUBMERGED ARC WELDS, WHERE USED, ARE SUBJECT TO TESTING REQUIREMENTS OF AWS D1.5, SECTION 5. ALL WELDS ARE CONTINUOUS, UNLESS NOTED.

3. NON-DESTRUCTIVE TESTING OF WELDS SHALL BE IN ACCORDANCE WITH THE REFERENCED SPECIFICATION.

4. SEE DETAIL "WS1" FOR WELD TERMINATION DETAILS.

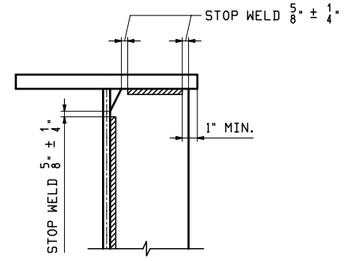

DETAIL "WS1"

STIFF. WELD TERMINATION

FIELD CONNECTIONS

1. ALL FIELD CONNECTIONS SHALL BE MADE WITH 7/8" DIAMETER HIGH STRENGTH A325 BOLTS, INSTALLED PER SECTION 506.19(c).

2. BOLTS SHALL HAVE A HEAVY HEX HEAD, HEAVY HEX NUT, AND AT LEAST ONE HARD FLAT WASHER EACH. WASHER TO BE PLACED UNDER THE TURNED ELEMENT.

3. PIECE MARKS WILL BE LOCATED AS SHOWN ON SHEET E1.

CLEANING

1. ALL STEEL SHALL BE BLAST CLEANED IN ACCORDANCE WITH SSPC SP-10.

PAINTING

1. ALL STEEL SHALL REMAIN UNPAINTED.

NOTE TO ENGINEER:
THESE NOTES ARE NOT INTENDED TO BE ALL INCLUSIVE AND COMPLIANCE WITH RELEVANT SPECIFICATIONS REMAIN UNCHANGED.

REV.	DATE	REMARKS	DWN	CHK	APVL	SHOP
0						

MATERIAL:	SURFACE PREP. & PAINT:	HOLES:	SHOP BOLTS:
M270-50W (UN)	SEE GN1		

DESCRIPTION: GENERAL NOTES

CASCO BAY STEEL STRUCTURES, INC.
1 WALLACE AVE. PHONE (207) 780-6722
SOUTH PORTLAND, ME 04106 FAX. (207) 780-6726
TENSOR 3244

STRUCTURE:	VT RTE 15 OVER CENTERVILLE BRIDGE #42 HYDE PARK LAMOILLE COUNTY	DRAWN: JAS	DATE: 02/28
		CHKD: DO	DATE: 3/4/14
LOCATION:	HYDE PARK, VT	JOB NO.	DWG NO.
PROJ NO.	STP CULV (26)	565	GN1
CUSTOMER:	VDOT		REV. △

DO Fri, Mar 7, 2014 04:59:43 PM /users/jas/3244/GN1.Rev0

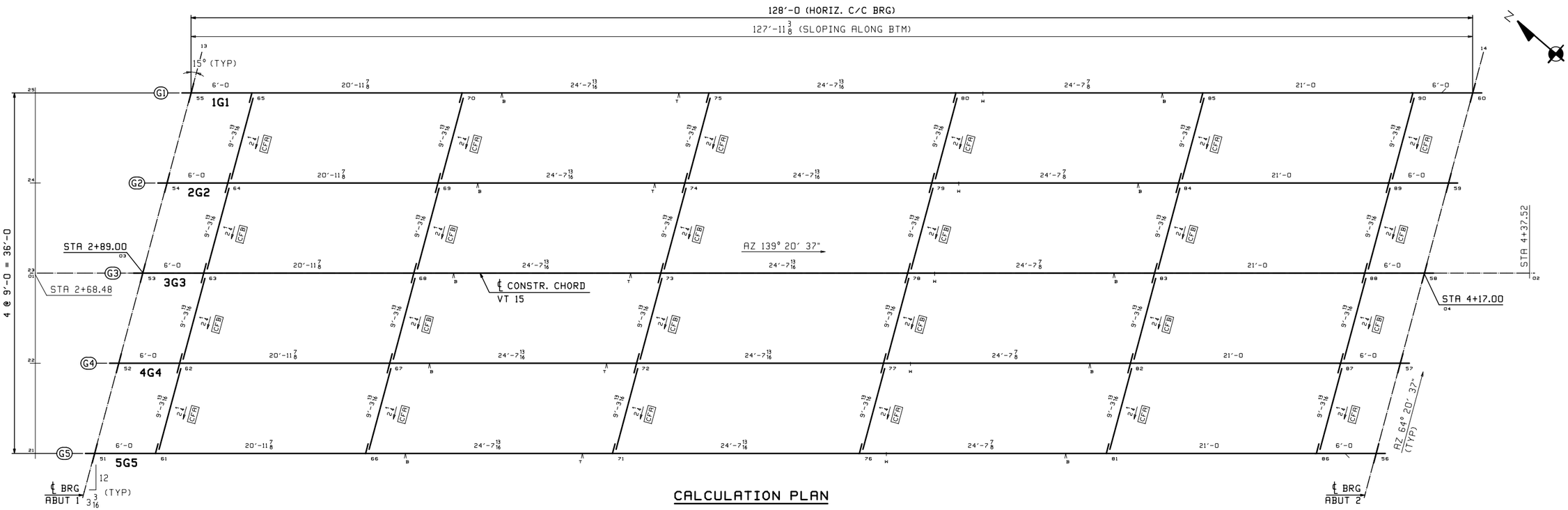

CALCULATION PLAN

	GRADE	
Line	ABUT 1	ABUT 2
1	-.0219	-.0084
2	-.0222	-.0087
3	-.0224	-.0089
4	-.0227	-.0092
5	-.0230	-.0094

** NOTE **
THE PURPOSE OF THIS DRAWING IS TO COORDINATE GEOMETRIC CONTROL INFORMATION. THIS DWG IS SUBMITTED FOR INFORMATION ONLY AND IS NOT INTENDED FOR SHOP FABRICATION.

NOTES:
1. LONGITUDINAL DIMENSIONS ARE SLOPING ALONG BOTT OF WEB WITH CORRECTIONS MADE FOR VERTICAL CURVE, GRADE & DL CAMBER (UN).
2. TRANSVERSE DIMENSIONS ARE HORIZONTAL (UN).
3. DROP ARROW POINTS TOWARDS LOW END OF MEMBER.
4. ENDS OF GIRDERS AND ALL BRG STIFF'S ARE VERTICAL AFTER DL ROTATION.
5. ALL INT. CROSSFRAMES ARE NORMAL TO GRADE.
6. BOTT PT NUMBERS = TOP PT NUMBERS + 500.
7. FOR LAYOUTS SEE "TD" SHEETS.

REV.	DATE	REMARKS	DWN	CHK	APVL	SHOP
0						

MATERIAL:	SURFACE PREP. & PAINT:	HOLES:	SHOP BOLTS:
M270-50W (UN)	SEE GN1		

DESCRIPTION: CALCULATION PLAN

CASCO BAY STEEL STRUCTURES, INC.
1 WALLACE AVE.
SOUTH PORTLAND, ME 04106
PHONE (207) 780-6722
FAX. (207) 780-6726
TENSOR 3244

STRUCTURE:	VT RTE 15 OVER CENTERVILLE BRIDGE #42 HYDE PARK LAMOILLE COUNTY	DRAWN: JAS	DATE: 02/27
		CHKD: DO	DATE: 3/5/14
LOCATION:	HYDE PARK, VT	JOB NO.	DWG NO.
PROJ NO.	STP CULV (26)	565	WS1
CUSTOMER:	VDOT		REV. △

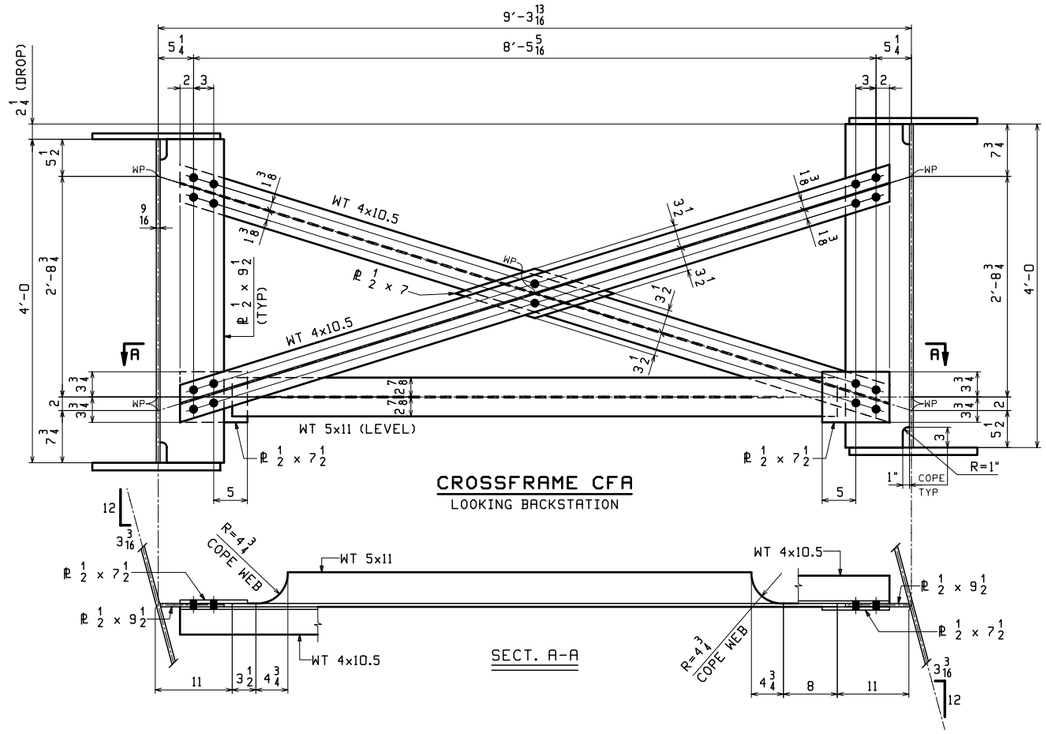

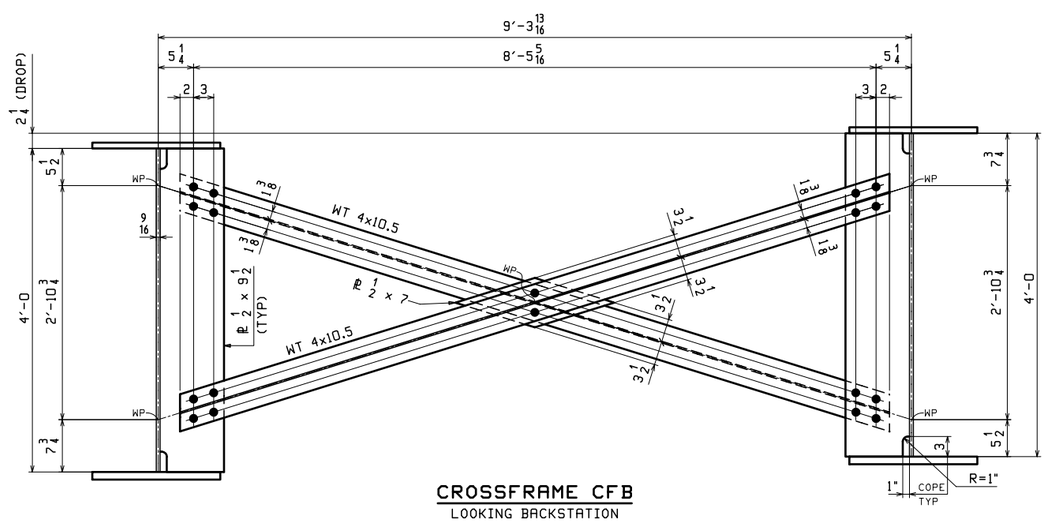

** NOTE **
THE PURPOSE OF THIS DRAWING IS TO COORDINATE GEOMETRIC CONTROL INFORMATION AND CONNECTION SPACING. THIS DWG IS SUBMITTED FOR INFORMATION ONLY & IS NOT INTENDED FOR SHOP FABRICATION. DETAIL DWGS WILL SHOW ALL WELDING AND DIMENSIONS REQ'D FOR FABRICATION.

REV.	DATE	REMARKS	DWN	CHK	APVL	SHOP
0						

MATERIAL:	SURFACE PREP. & PAINT:	HOLES:	SHOP BOLTS:
M270-50W (UN)	SEE GN1	15/16"ϕ	NONE

DESCRIPTION: TYPICAL LAYOUTS

CASCO BAY STEEL STRUCTURES, INC.
1 WALLACE AVE. SOUTH PORTLAND, ME 04106
PHONE (207) 780-6722 FAX. (207) 780-6726
TENSOR 3244

STRUCTURE: VT RTE 15 OVER CENTERVILLE BRIDGE #42 HYDE PARK LAMOILLE COUNTY		DRAWN: JAS	DATE: 02/27
		CHKD: DO	DATE: 3/5/14
LOCATION: HYDE PARK, VT		JOB NO.	DWG NO.
PROJ NO. STP CULV (26)		565	TD1
CUSTOMER: VDOT			REV. △

DO Fri, Mar 7, 2014 04:38:55 PM /users/jobs/3244/TD1.Rev0

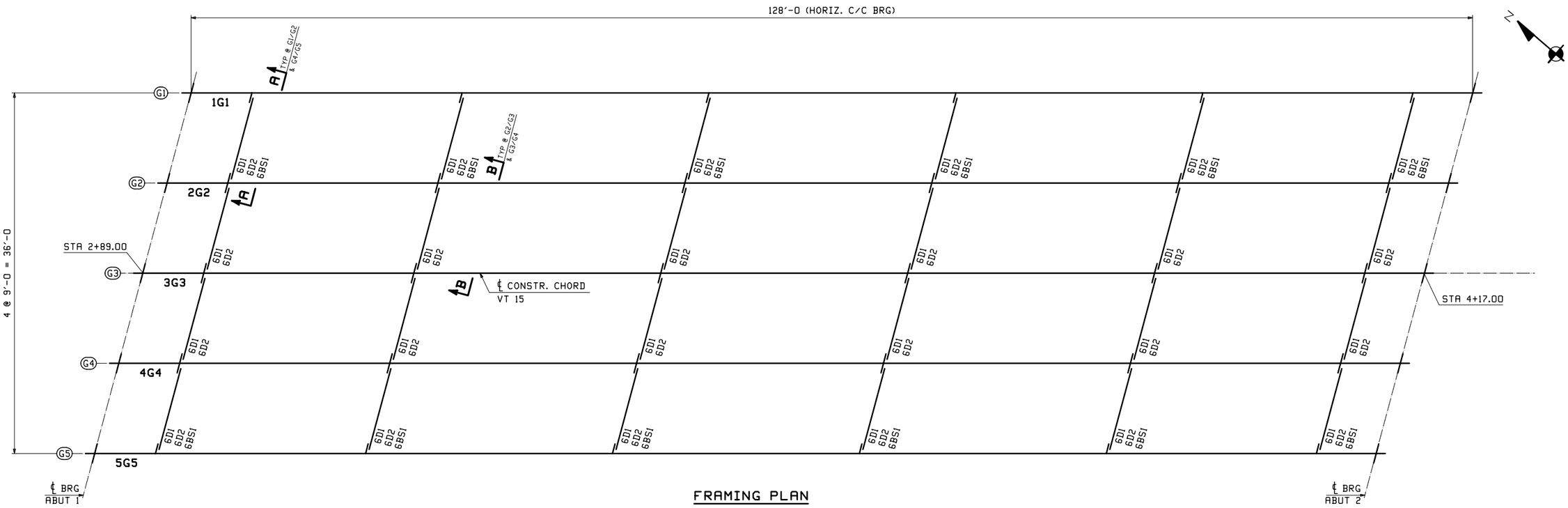

FRAMING PLAN

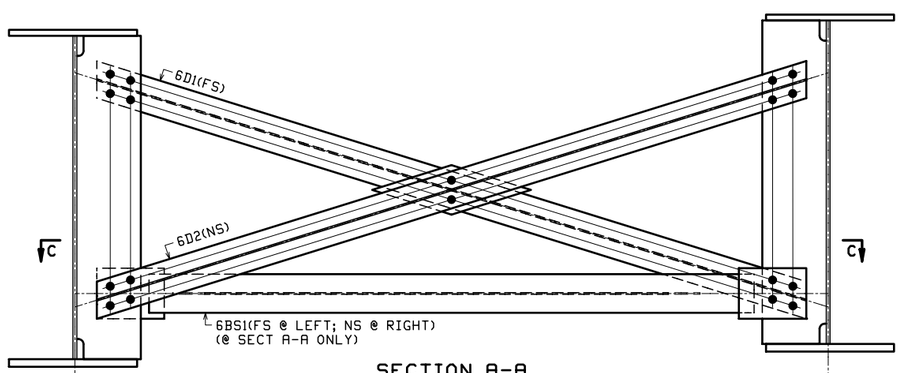

SECTION A-A
SECTION B-B
LOOKING BACKSTATION

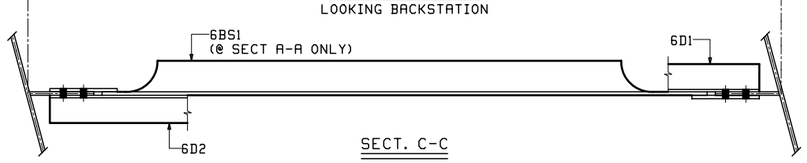

SECT. C-C

FIELD BOLT LIST							A325 Type 3 BOLTS							
LINE	NO REQ'D.	BOLT DIAM.	BOLT LEN.	BOLTS /CONN.	# OF CONN.	GRIP	THICKNESS OF PCS. CONNECTED						WASH CODE	PIECES CONNECTED AND REMARKS
1														CROSSFRAME @ FASCIA
2	96	7/8	2 1/4	4	24	7/8	1/2	3/8					1	CONN STIFF ~ DIAG FLG
3	96	7/8	2 3/4	4	24	1 3/8	1/2	3/8	1/2				1	CONN STIFF~DIAG FLG~GUSS
4	24	7/8	2 3/4	2	12	1 1/4	3/8	1/2	3/8				1	DIAG FLG~CTR GUSS~DIAG FLG
5														
6														CROSSFRAME @ INTERIOR
7	192	7/8	2 1/4	4	48	7/8	1/2	3/8					1	CONN STIFF ~ DIAG FLG
8	24	7/8	2 3/4	2	12	1 1/4	3/8	1/2	3/8				1	DIAG FLG~CTR GUSS~DIAG FLG
9														

WASHER CODES

1: 1 Hard Flat Washer

FIELD BOLT SUMMARY			2% + 2 ADDED, MIN. 2 EXTRA			
LINE	NO. OF BOLTS	BOLT DIAM.	TYPE	BOLT LEN	ACTUAL COUNT	REMARKS
1	296	7/8	A325 Type 3	2 1/4	288	
2	149	7/8	A325 Type 3	2 3/4	144	
3						
4	445	Hard Flat Washers	for 7/8 ø	BOLT	(F436-3)	
5						
6						
7						

REV.	DATE	REMARKS	DWN	CHK	APVL	SHOP
0						

MATERIAL:	SURFACE PREP. & PAINT:	HOLES:	SHOP BOLTS:
M270-50W (UN)	SEE GN1	15/16"ø	

DESCRIPTION: FRAMING PLAN

CASCO BAY STEEL STRUCTURES, INC.
1 WALLACE AVE.
SOUTH PORTLAND, ME 04106
PHONE (207) 780-6722
FAX. (207) 780-6726
TENSOR 3244

STRUCTURE:	VT RTE 15 OVER CENTERVILLE BRIDGE #42 HYDE PARK LAMOILLE COUNTY	DRAWN: JAS	DATE: 02/28
		CHKD: DO	DATE: 3/7/14
LOCATION:	HYDE PARK, VT	JOB NO.	DWG NO.
PROJ NO.	STP CULV (26)	565	E1
CUSTOMER:	VDOT		REV. △

Fri, Mar 7, 2014 04:59:29 PM /users/jobs/3244/E1 : Rev0

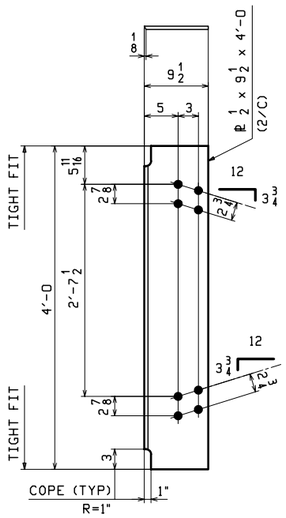

24 ~ CF CONN STIFF ~ x1a
(LOW SIDE)

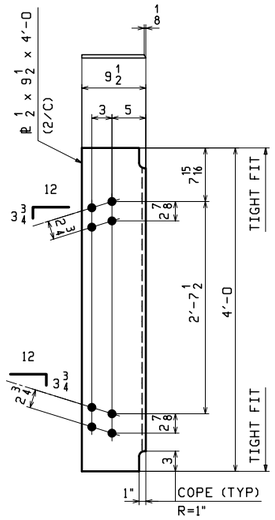

24 ~ CF CONN STIFF ~ x1b
(HIGH SIDE)

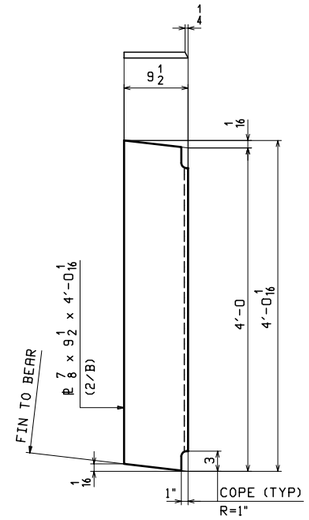

5 ~ BRG STIFF ~ x1c
(NS @ ABUT 1)

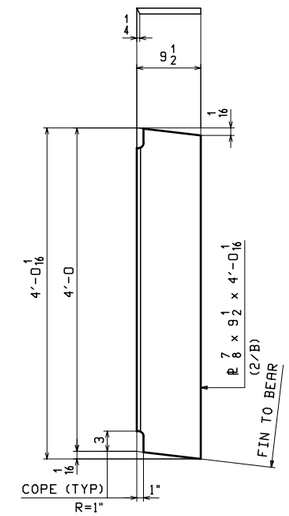

5 ~ BRG STIFF ~ x1d
(FS @ ABUT 1)

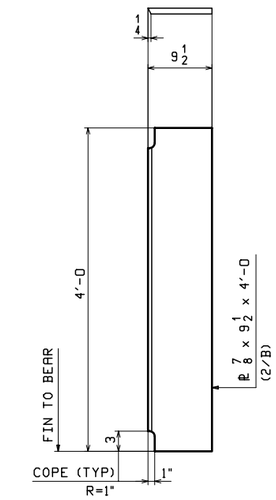

10 ~ BRG STIFF ~ x1f
(ABUT 2)

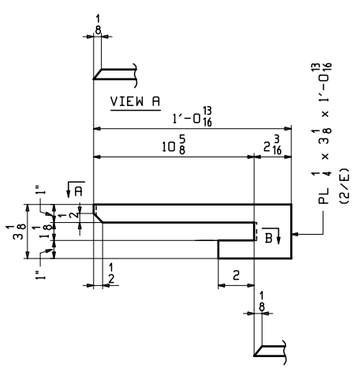

ONE ~ DRIP BAR ~ x1g
(@ G5, NEAR ABUT 2)

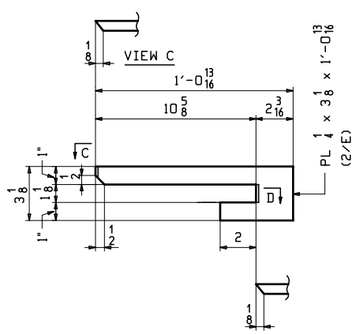

ONE ~ DRIP BAR ~ x1h
(@ G1, NEAR ABUT 2)

NOTES:
1. FOR GENERAL NOTES SEE DRAWING GN1.

REV.	DATE	REMARKS	DWN	CHK	APVL	SHOP
0						

MATERIAL:	SURFACE PREP. & PAINT:	HOLES:	SHOP BOLTS:
M270-50W (UN)	SEE GN1	15/16"Ø	NONE

DESCRIPTION: GIRDER STANDARD DETAILS

CASCO BAY STEEL STRUCTURES, INC.
1 WALLACE AVE. SOUTH PORTLAND, ME 04106
PHONE (207) 780-6722 FAX. (207) 780-6726
TENSOR 3244

STRUCTURE: VT RTE 15 OVER CENTERVILLE BRIDGE #42 HYDE PARK LAMOILLE COUNTY	DRAWN: JAS	DATE: 02/28	
	CHKD: DO	DATE: 3/6/14	
LOCATION: HYDE PARK, VT	JOB NO.	DWG NO.	
PROJ NO. STP CULV (26)	565	X1	
CUSTOMER: VDOT		REV. △	

DO Fri, Mar 7, 2014 05:06:14 PM /users/jobs/3244/X1 : Rev0

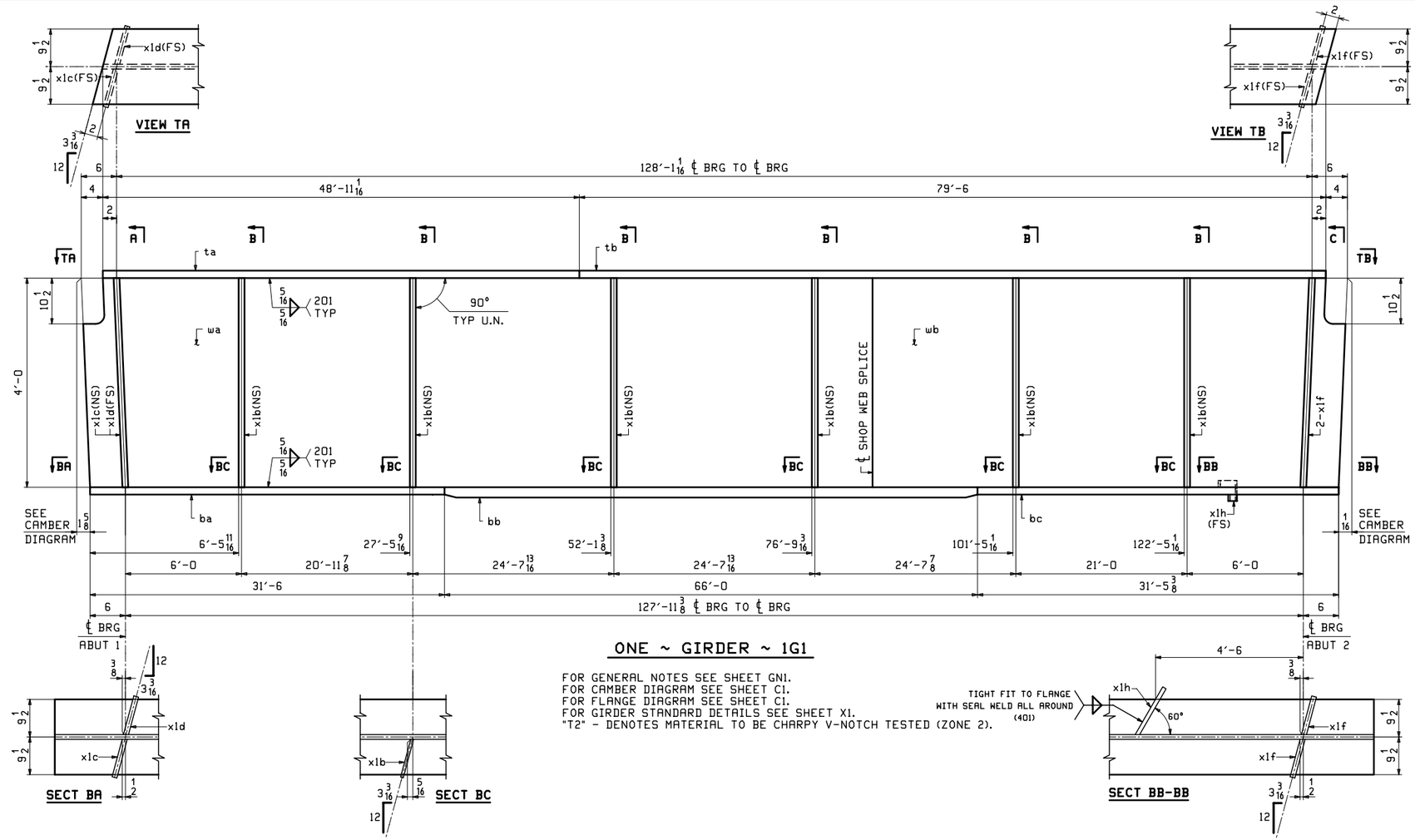

ONE ~ GIRDER ~ 1G1

FOR GENERAL NOTES SEE SHEET GN1.
FOR CAMBER DIAGRAM SEE SHEET C1.
FOR FLANGE DIAGRAM SEE SHEET C1.
FOR GIRDER STANDARD DETAILS SEE SHEET X1.
"T2" - DENOTES MATERIAL TO BE CHARPY V-NOTCH TESTED (ZONE 2).

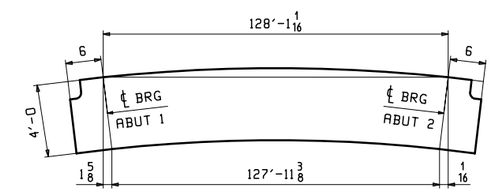

ORIENTATION DIAGRAM

ABM INFO		SHIP	BILL OF MATERIAL						JOB NO.	DRAWING NO.	REV.
									565	1	
PAGE	LINE	MARK	QTY	MARK	MATERIAL	LENGTH FT	LENGTH INCHES	REMARKS	WT	PROCUREMENT NOTES	
		1G1	1		GIRDER				31484		
1	E		1	wa	PL 9/16×48	79	7 5/8	M270-50WT2	7317		
1	G		1	wb	PL 9/16×48	49	5 13/16	M270-50WT2	4546		
1	L		1	ta	PL 7/8×19	48	11 1/16		2768		
1	J		1	tb	PL 7/8×19	79	6		4497		
1	C		1	ba	PL 1 1/8×19	31	6	M270-50WT2	2291		
1	A		1	bb	PL 1 5/8×19	66	0	M270-50WT2	6934		
1	C		1	bc	PL 1 1/8×19	31	5 3/8	M270-50WT2	2287		
2	C		6	x1b	PL 1/2×9 1/2	4	0		65		
2	B		1	x1c	PL 7/8×9 1/2	4	0 1/16	(MIE)	113		
2	B		1	x1d	PL 7/8×9 1/2	4	0 1/16	(MIE)	113		
2	B		2	x1f	PL 7/8×9 1/2	4	0	(MIE)	113		
2	E		1	x1h	PL 1/4×3 1/8	1	0 13/16		3		

REV.	DATE	REMARKS	DWN	CHK	APVL	SHOP
0						

MATERIAL:	SURFACE PREP. & PAINT:	HOLES:	SHOP BOLTS:
M270-50W (UN)	SEE GN1	15/16"Ø	NONE

DESCRIPTION: GIRDER~1G1

CASCO BAY STEEL STRUCTURES, INC.
1 WALLACE AVE. PHONE (207) 780-6722
SOUTH PORTLAND, ME 04106 FAX. (207) 780-6726
TENSOR 3244

STRUCTURE:	VT RTE 15 OVER CENTERVILLE BRIDGE #42 HYDE PARK LAMOILLE COUNTY	DRAWN: JAS	DATE: 02/28
		CHKD: DO	DATE: 3/6/14
LOCATION:	HYDE PARK, VT	JOB NO.	DWG NO.
PROJ NO.	STP CULV (26)	565	1
CUSTOMER:	VDOT		REV. △

Fri Mar 7, 2014 09:06:27 PM /users/jeb/3244/1 - Rev0
DO

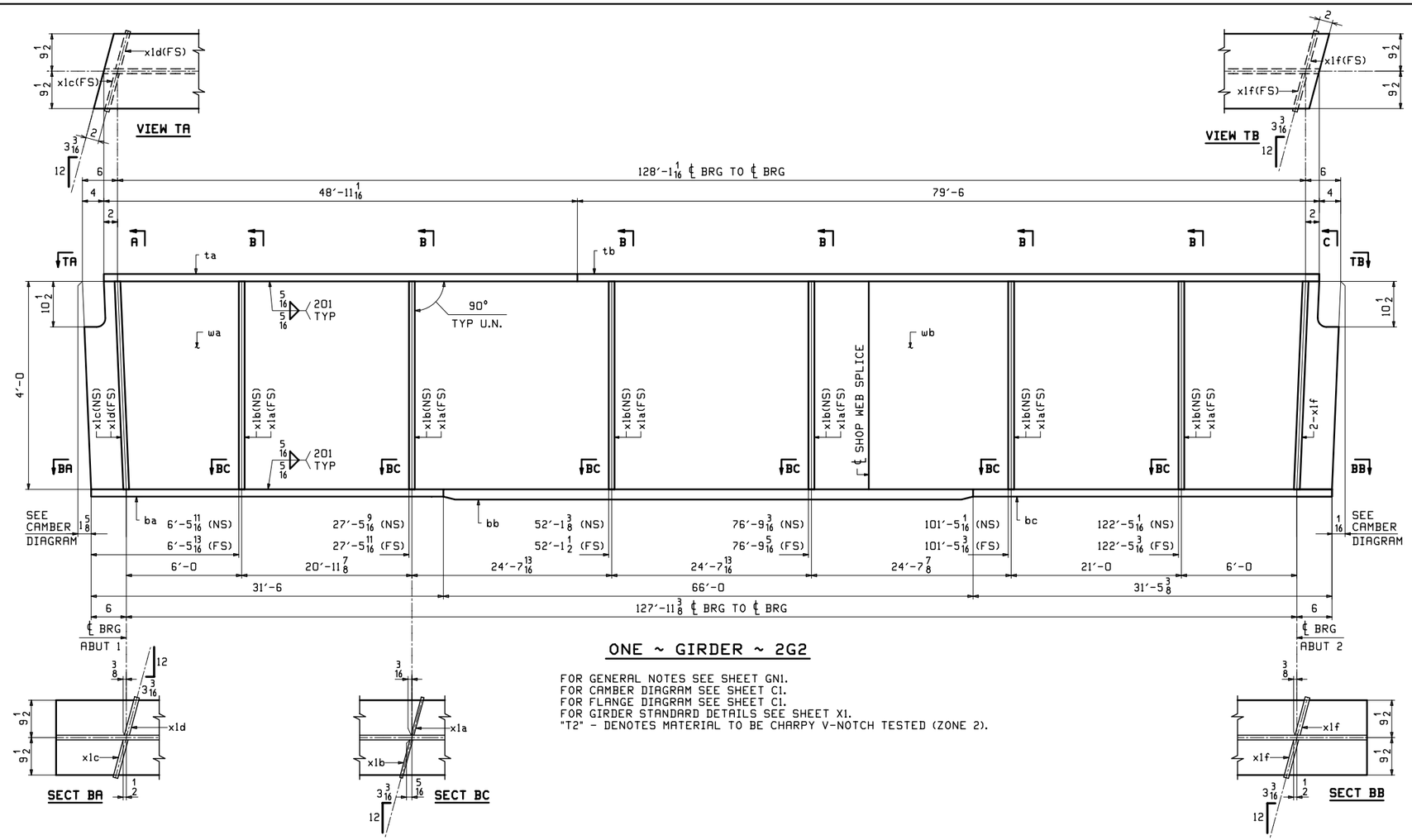

ONE ~ GIRDER ~ 2G2

FOR GENERAL NOTES SEE SHEET GN1.
FOR CAMBER DIAGRAM SEE SHEET C1.
FOR FLANGE DIAGRAM SEE SHEET C1.
FOR GIRDER STANDARD DETAILS SEE SHEET X1.
"T2" - DENOTES MATERIAL TO BE CHARPY V-NOTCH TESTED (ZONE 2).

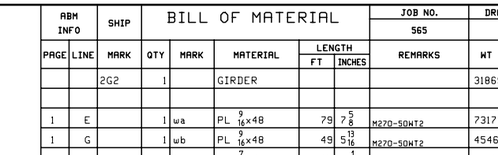

ORIENTATION DIAGRAM

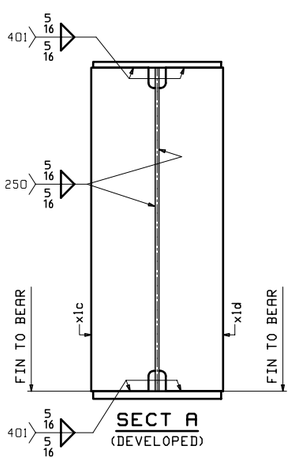

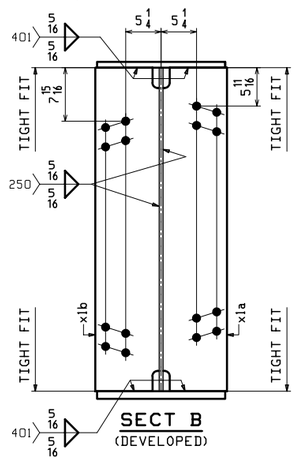

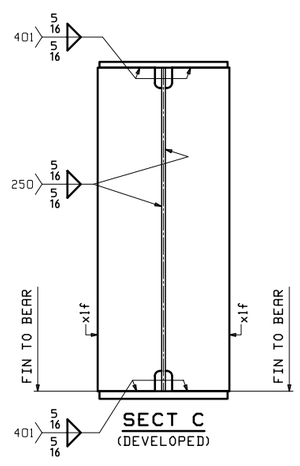

ABM INFO		SHIP	BILL OF MATERIAL					JOB NO.	DRAWING NO.	REV.
								565	2	
PAGE	LINE	MARK	QTY	MARK	MATERIAL	LENGTH FT	LENGTH INCHES	REMARKS	WT	PROCUREMENT NOTES
		2G2	1		GIRDER				31869	
1	E		1	wa	PL 9/16×48	79	7 5/8	M270-50WT2	7317	
1	G		1	wb	PL 9/16×48	49	5 13/16	M270-50WT2	4546	
1	L		1	ta	PL 7/8×19	48	11 1/16		2768	
1	J		1	tb	PL 7/8×19	79	6		4497	
1	C		1	ba	PL 1 1/8×19	31	6	M270-50WT2	2291	
1	A		1	bb	PL 1 5/8×19	66	0	M270-50WT2	6934	
1	C		1	bc	PL 1 1/8×19	31	5 3/8	M270-50WT2	2287	
2	C		6	x1a	PL 1/2×9 1/2	4	0		65	
2	C		6	x1b	PL 1/2×9 1/2	4	0		65	
2	B		1	x1c	PL 7/8×9 1/2	4	0 1/16	(MIE)	113	
2	B		1	x1d	PL 7/8×9 1/2	4	0 1/16	(MIE)	113	
2	B		2	x1f	PL 7/8×9 1/2	4	0	(MIE)	113	

REV.	DATE	REMARKS	DWN	CHK	APVL	SHOP
0						

MATERIAL:	SURFACE PREP. & PAINT:	HOLES:	SHOP BOLTS:
M270-50W (UN)	SEE GN1	15/16"Ø	NONE

DESCRIPTION: GIRDER~2G2

CASCO BAY STEEL STRUCTURES, INC.
1 WALLACE AVE. SOUTH PORTLAND, ME 04106
PHONE (207) 780-6722 FAX. (207) 780-6726
TENSOR 3244

STRUCTURE:	VT RTE 15 OVER CENTERVILLE BRIDGE #42 HYDE PARK LAMOILLE COUNTY	DRAWN: JAS	DATE: 02/28
		CHKD: DO	DATE: 3/6/14
LOCATION:	HYDE PARK, VT	JOB NO.	DWG NO.
PROJ NO.	STP CULV (26)	565	2
CUSTOMER:	VDOT		REV. △

Fri, Mar 7, 2014 03:06:44 PM /users/jas/3244/2 : Rev0

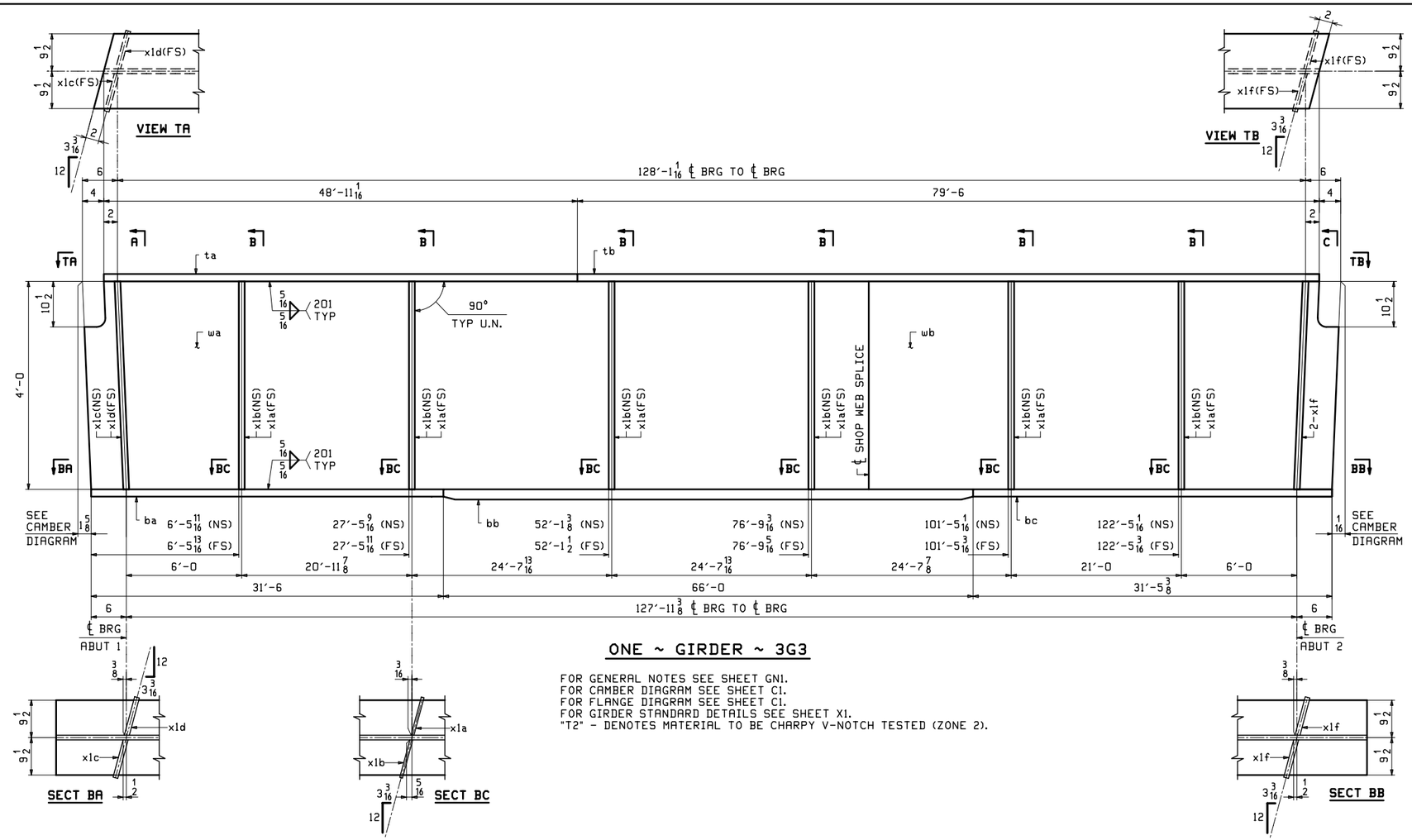

ONE ~ GIRDER ~ 3G3

FOR GENERAL NOTES SEE SHEET GN1.
FOR CAMBER DIAGRAM SEE SHEET C1.
FOR FLANGE DIAGRAM SEE SHEET C1.
FOR GIRDER STANDARD DETAILS SEE SHEET X1.
"T2" - DENOTES MATERIAL TO BE CHARPY V-NOTCH TESTED (ZONE 2).

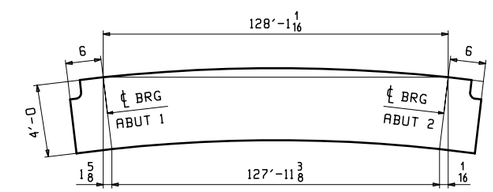

ORIENTATION DIAGRAM

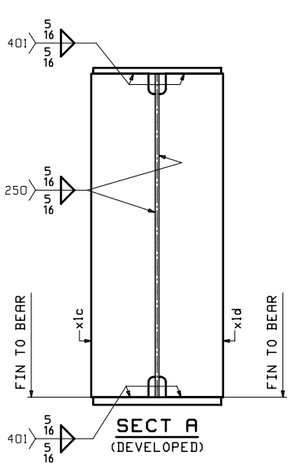

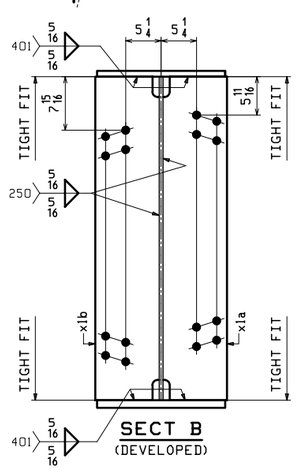

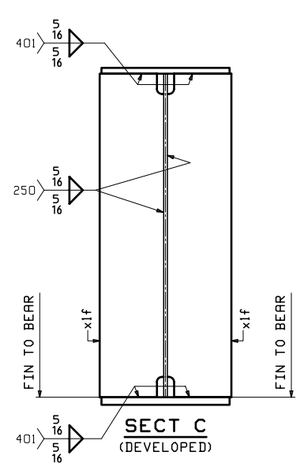

ABM INFO		SHIP	BILL OF MATERIAL					JOB NO.	DRAWING NO.	REV.
								565	3	
PAGE	LINE	MARK	QTY	MARK	MATERIAL	LENGTH FT	LENGTH INCHES	REMARKS	WT	PROCUREMENT NOTES
		3G3	1		GIRDER				31869	
1	E		1	wa	PL 9/16×48	79	7 5/8	M270-50WT2	7317	
1	G		1	wb	PL 9/16×48	49	5 13/16	M270-50WT2	4546	
1	L		1	ta	PL 7/8×19	48	11 1/16		2768	
1	J		1	tb	PL 7/8×19	79	6		4497	
1	C		1	ba	PL 1 1/8×19	31	6	M270-50WT2	2291	
1	A		1	bb	PL 1 5/8×19	66	0	M270-50WT2	6934	
1	C		1	bc	PL 1 1/8×19	31	5 3/8	M270-50WT2	2287	
2	C		6	x1a	PL 1/2×9 1/2	4	0		65	
2	C		6	x1b	PL 1/2×9 1/2	4	0		65	
2	B		1	x1c	PL 7/8×9 1/2	4	0 1/16	(MIE)	113	
2	B		1	x1d	PL 7/8×9 1/2	4	0 1/16	(MIE)	113	
2	B		2	x1f	PL 7/8×9 1/2	4	0	(MIE)	113	

REV.	DATE	REMARKS	DWN	CHK	APVL	SHOP
0						

MATERIAL:	SURFACE PREP. & PAINT:	HOLES:	SHOP BOLTS:
M270-50W (UN)	SEE GN1	15/16"Ø	NONE

DESCRIPTION: GIRDER~3G3

CASCO BAY STEEL STRUCTURES, INC.
1 WALLACE AVE. SOUTH PORTLAND, ME 04106
PHONE (207) 780-6722 FAX. (207) 780-6726
TENSOR 3244

STRUCTURE: VT RTE 15 OVER CENTERVILLE
BRIDGE #42
HYDE PARK
LAMOILLE COUNTY

		DRAWN: JAS	DATE: 02/28
		CHKD: DO	DATE: 3/6/14
LOCATION:	HYDE PARK, VT	JOB NO.	DWG NO.
PROJ NO.	STP CULV (26)	565	3
CUSTOMER:	VDOT		REV. △

Fri, Mar 7, 2014 09:06:58 PM /users/jdo/3244/3 ; Rev0
DO

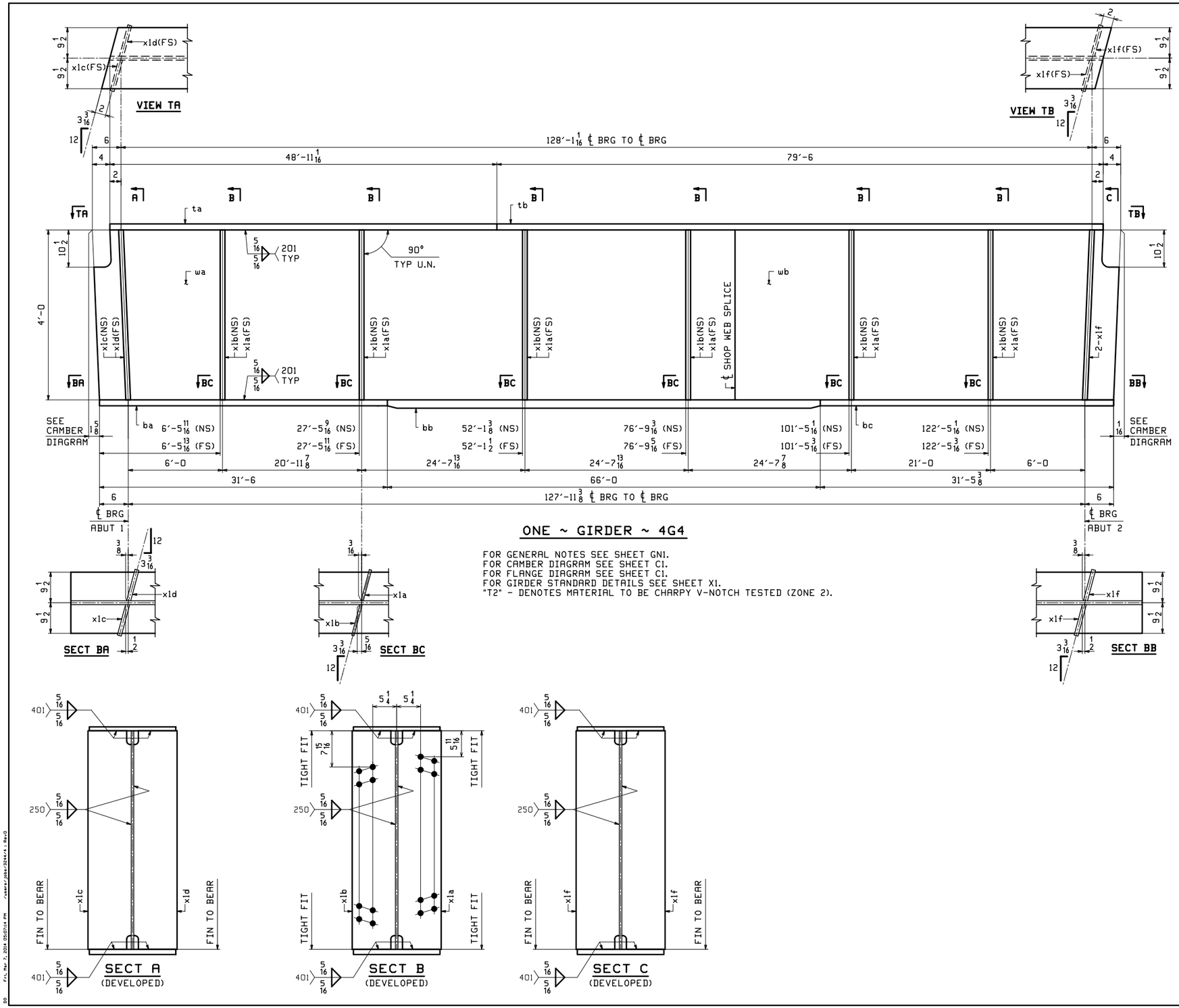

ONE ~ GIRDER ~ 4G4

FOR GENERAL NOTES SEE SHEET GN1.
FOR CAMBER DIAGRAM SEE SHEET C1.
FOR FLANGE DIAGRAM SEE SHEET C1.
FOR GIRDER STANDARD DETAILS SEE SHEET X1.
"T2" - DENOTES MATERIAL TO BE CHARPY V-NOTCH TESTED (ZONE 2).

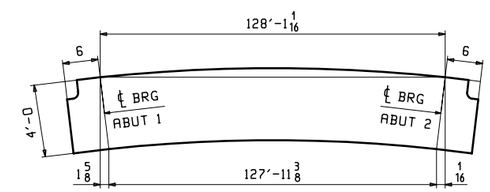

ORIENTATION DIAGRAM

ABM INFO		SHIP	BILL OF MATERIAL					JOB NO.	DRAWING NO.	REV.
								565	4	
PAGE	LINE	MARK	QTY	MARK	MATERIAL	LENGTH FT	LENGTH INCHES	REMARKS	WT	PROCUREMENT NOTES
		4G4	1		GIRDER				31869	
1	E		1	wa	PL 9/16x48	79	7 5/8	M270-50WT2	7317	
1	G		1	wb	PL 9/16x48	49	5 13/16	M270-50WT2	4546	
1	L		1	ta	PL 7/8x19	48	11 1/16		2768	
1	J		1	tb	PL 7/8x19	79	6		4497	
1	C		1	ba	PL 1 1/8x19	31	6	M270-50WT2	2291	
1	A		1	bb	PL 1 5/8x19	66	0	M270-50WT2	6934	
1	C		1	bc	PL 1 1/8x19	31	5 3/8	M270-50WT2	2287	
2	C		6	x1a	PL 1/2x9 1/2	4	0		65	
2	C		6	x1b	PL 1/2x9 1/2	4	0		65	
2	B		1	x1c	PL 7/8x9 1/2	4	0 1/16	(MIE)	113	
2	B		1	x1d	PL 7/8x9 1/2	4	0 1/16	(MIE)	113	
2	B		2	x1f	PL 7/8x9 1/2	4	0	(MIE)	113	

REV.	DATE	REMARKS	DWN	CHK	APVL	SHOP
0						

MATERIAL:	SURFACE PREP. & PAINT:	HOLES:	SHOP BOLTS:
M270-50W (UN)	SEE GN1	15/16"ø	NONE

DESCRIPTION: GIRDER~4G4

CASCO BAY STEEL STRUCTURES, INC.
1 WALLACE AVE. SOUTH PORTLAND, ME 04106
PHONE (207) 780-6722 FAX. (207) 780-6726
TENSOR 3244

STRUCTURE: VT RTE 15 OVER CENTERVILLE
BRIDGE #42
HYDE PARK
LAMOILLE COUNTY

DRAWN:	DATE:
JAS	02/28
CHKD:	DATE:
DO	3/6/14

LOCATION:	HYDE PARK, VT	JOB NO.	DWG NO.
PROJ NO.	STP CULV (26)	565	4
CUSTOMER:	VDOT		REV. △

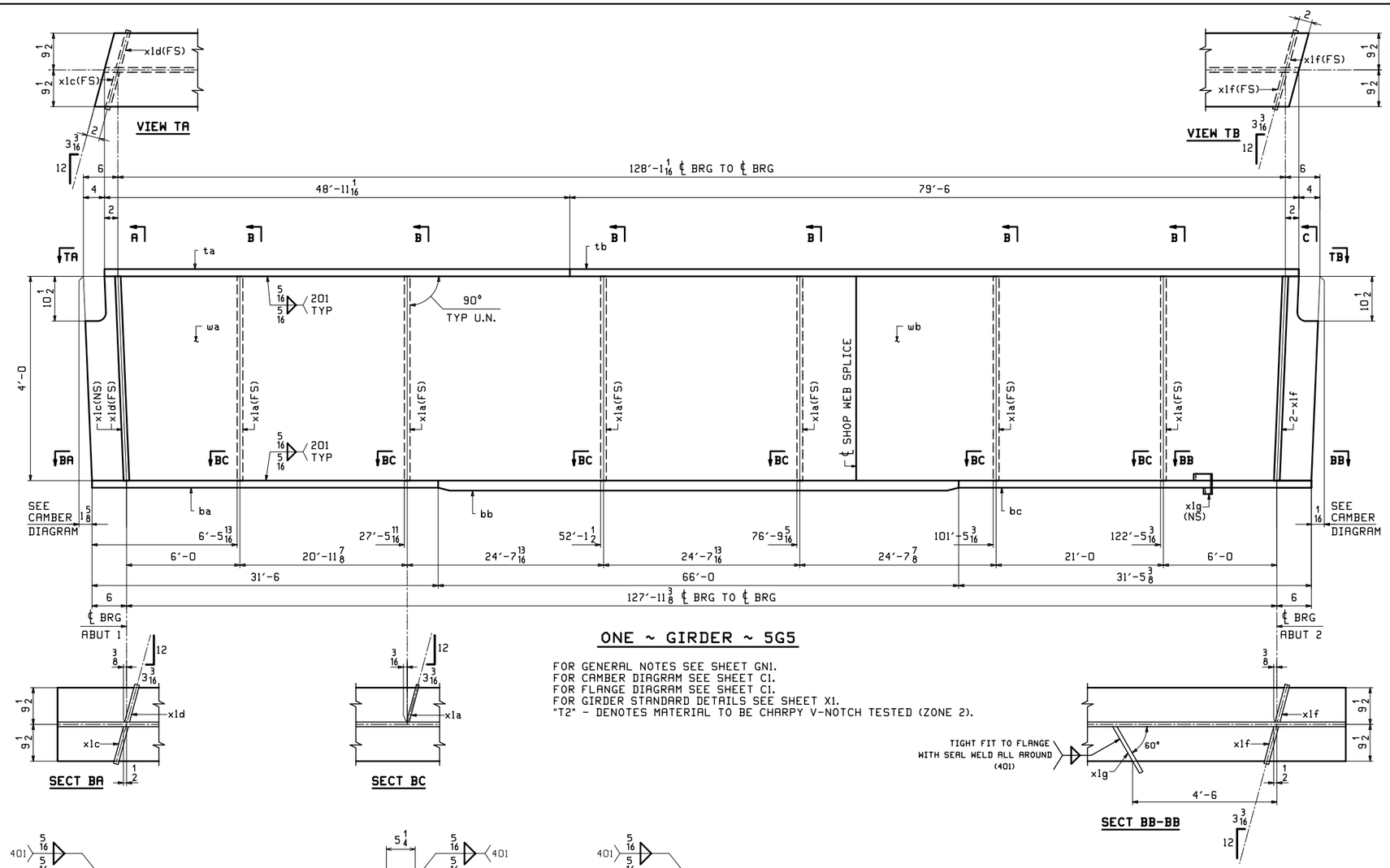

ONE ~ GIRDER ~ 5G5

FOR GENERAL NOTES SEE SHEET GN1.
FOR CAMBER DIAGRAM SEE SHEET C1.
FOR FLANGE DIAGRAM SEE SHEET C1.
FOR GIRDER STANDARD DETAILS SEE SHEET X1.
"T2" - DENOTES MATERIAL TO BE CHARPY V-NOTCH TESTED (ZONE 2).

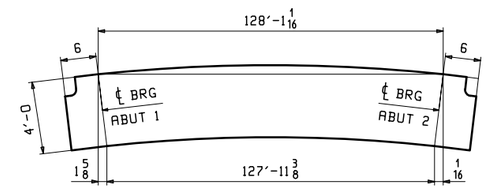

ORIENTATION DIAGRAM

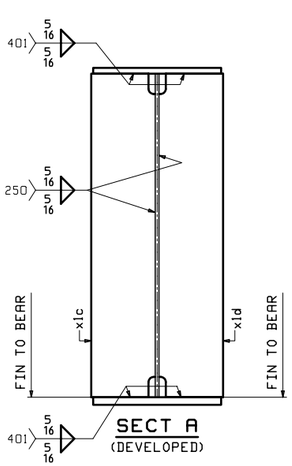

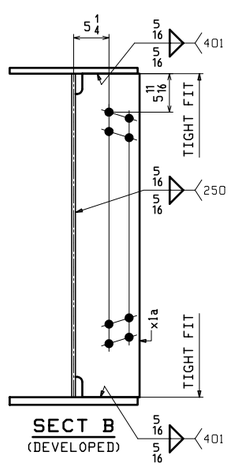

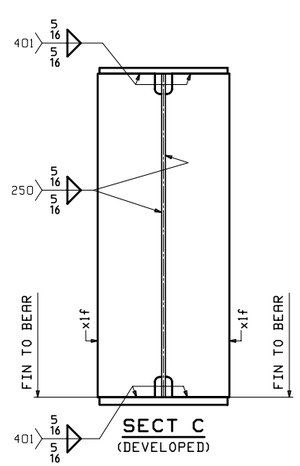

ABM INFO		SHIP	BILL OF MATERIAL					JOB NO.	DRAWING NO.	REV.
								565	5	
PAGE	LINE	MARK	QTY	MARK	MATERIAL	LENGTH FT	LENGTH INCHES	REMARKS	WT	PROCUREMENT NOTES
		5G5	1		GIRDER				31484	
1	E		1	wa	PL 9/16×48	79	7 5/8	M270-50WT2	7317	
1	G		1	wb	PL 9/16×48	49	5 13/16	M270-50WT2	4546	
1	L		1	ta	PL 7/8×19	48	11 1/16		2768	
1	J		1	tb	PL 7/8×19	79	6		4497	
1	C		1	ba	PL 1 1/8×19	31	6	M270-50WT2	2291	
1	A		1	bb	PL 1 5/8×19	66	0	M270-50WT2	6934	
1	C		1	bc	PL 1 1/8×19	31	5 3/8	M270-50WT2	2287	
2	C		6	x1a	PL 1/2×9 1/2	4	0		65	
2	B		1	x1c	PL 7/8×9 1/2	4	0 1/16	(MIE)	113	
2	B		1	x1d	PL 7/8×9 1/2	4	0 1/16	(MIE)	113	
2	B		2	x1f	PL 7/8×9 1/2	4	0	(MIE)	113	
2	E		1	x1g	PL 1/4×3 1/8	1	0 13/16		3	

REV.	DATE	REMARKS	DWN	CHK	APVL	SHOP
0						

MATERIAL:	SURFACE PREP. & PAINT:	HOLES:	SHOP BOLTS:
M270-50W (UN)	SEE GN1	15/16"Ø	NONE

DESCRIPTION: GIRDER~5G5

CASCO BAY STEEL STRUCTURES, INC.
1 WALLACE AVE. SOUTH PORTLAND, ME 04106
PHONE (207) 780-6722 FAX. (207) 780-6726
TENSOR 3244

STRUCTURE: VT RTE 15 OVER CENTERVILLE
BRIDGE #42
HYDE PARK
LAMOILLE COUNTY

DRAWN: JAS DATE: 02/28
CHKD: DO DATE: 3/6/14

LOCATION: HYDE PARK, VT
PROJ NO. STP CULV (26)
CUSTOMER: VDOT

JOB NO. 565
DWG NO. 5
REV. △

Fri, Mar 7, 2014 03:07:31 PM C:\Users\jdo\3244-5 - Rev0

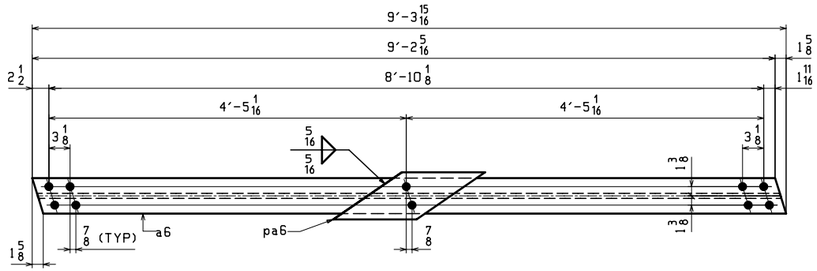

24 ~ CF DIAGONAL ~ 6D1
(LOOKING DOWNSTATION)

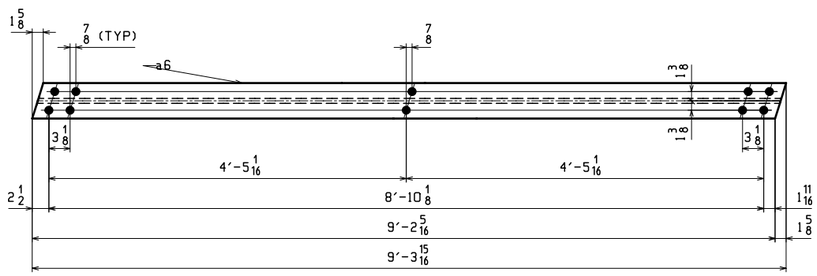

24 ~ CF DIAGONAL ~ 6D2
(LOOKING DOWNSTATION)

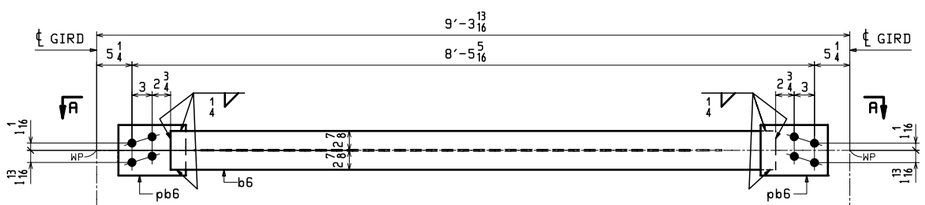

12 ~ CF BTM STRUT ~ 6BS1
(LOOKING DOWNSTATION)

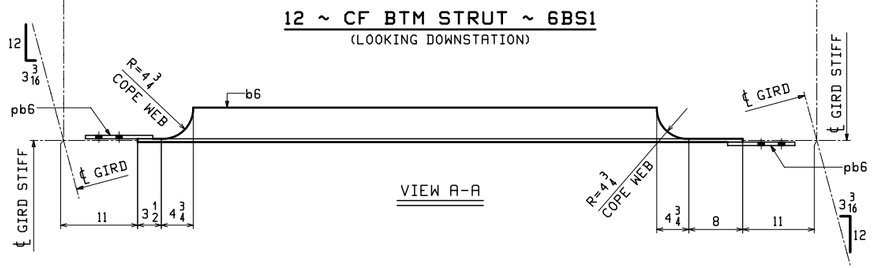

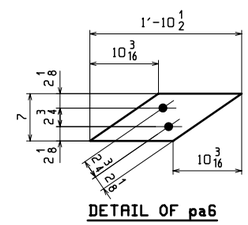

DETAIL OF pa6

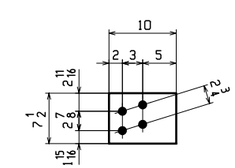

DETAIL OF pb6

ABM INFO		SHIP	BILL OF MATERIAL					JOB NO.	DRAWING NO.	REV.
								565	6	
PAGE	LINE	MARK	QTY	MARK	MATERIAL	LENGTH FT	LENGTH INCHES	REMARKS	WT	PROCUREMENT NOTES
		6D1	24		CROSSFRAME DIAG				120	
2	J		24	a6	WT 4x10.5	9	3 15/16		98	
2	L		24	pa6	PL 1/2x7	1	10 1/2		22	
		6D2	24		CROSSFRAME DIAG				98	
2	J		24	a6	WT 4x10.5	9	3 15/16		98	
		6BS1	12		CROSSFRAME BTM STRUT				104	
2	H		12	b6	WT 5x11	7	5 13/16		82	
2	M		24	pb6	PL 1/2x7 1/2	0	10		11	

NOTES:
FOR GENERAL NOTES SEE SHEET GN1.

REV.	DATE	REMARKS	DWN	CHK	APVL	SHOP
0						

MATERIAL:	SURFACE PREP. & PAINT:	HOLES:	SHOP BOLTS:
M270-50W (UN)	SEE GN1	15/16"Ø	NONE

DESCRIPTION: INT CROSSFRAMES

CASCO BAY STEEL STRUCTURES, INC.
1 WALLACE AVE.
SOUTH PORTLAND, ME 04106
PHONE (207) 780-6722
FAX. (207) 780-6726
TENSOR 3244

STRUCTURE: VT RTE 15 OVER CENTERVILLE BRIDGE #42 HYDE PARK LAMOILLE COUNTY	DRAWN: JAS	DATE: 02/28	
	CHKD: DO	DATE: 3/7/14	
LOCATION: HYDE PARK, VT	JOB NO.	DWG NO.	
PROJ NO. STP CULV (26)	565	6	
CUSTOMER: VDOT		REV. △	

DO Fri, Mar 7, 2014 05:07:49 PM /users/jobs/3244/6 : Rev0