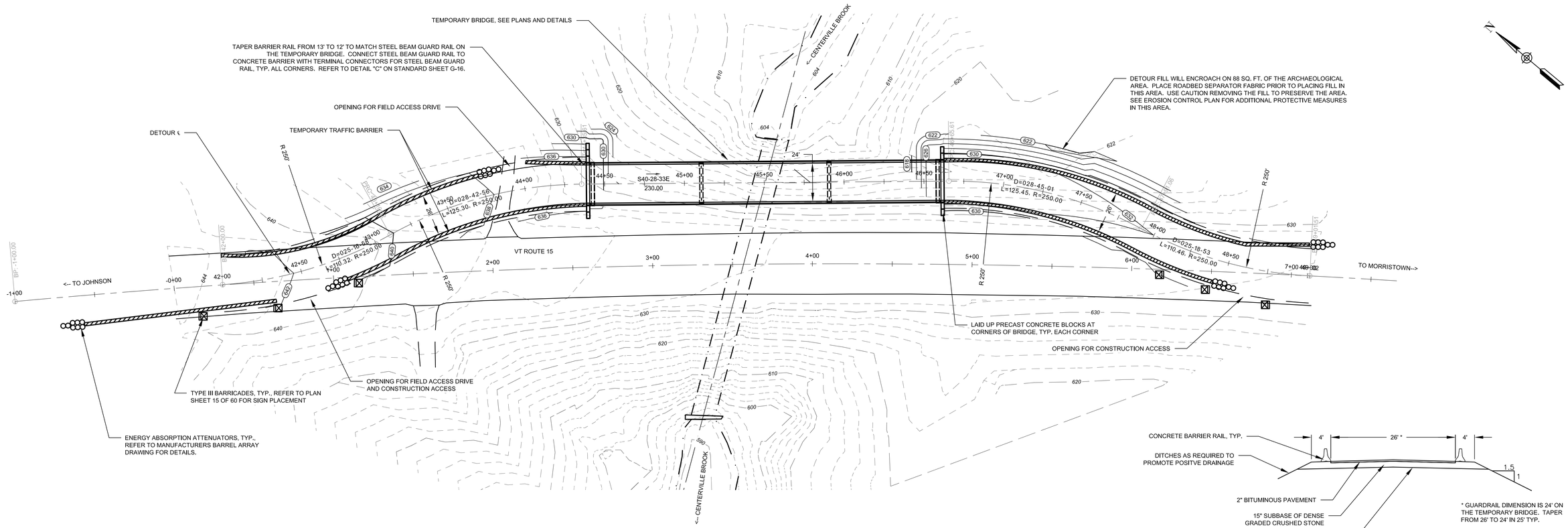

DETOUR LAYOUT PLAN
1" = 30'

0 30' 60'

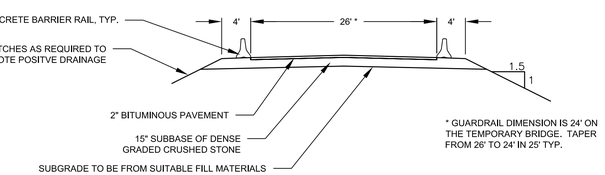

* GUARDRAIL DIMENSION IS 24' ON THE TEMPORARY BRIDGE. TAPER FROM 26' TO 24' IN 25' TYP.

DETOUR TYPICAL SECTION
1" = 10'

0 10' 20'

NOTES:
1. REFER TO CONTRACT PLAN SHEET 15 OF 60 FOR ADDITIONAL TRAFFIC CONTROL DETAILS.
2. EXISTING CONTOURS DIGITIZED FROM CONTRACT DRAWINGS

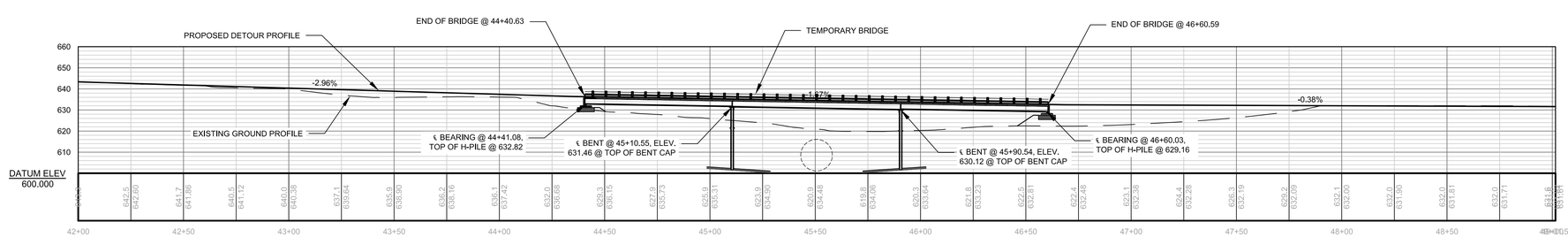

DETOUR PROFILE
1" = 30'

0 30' 60'

NO.	DATE	DESCRIPTION	BY
1	04/28/14	REVISED DETOUR PROFILE (ELEVATIONS)	T.R.

Timothy J. Ruggles PE

Digitally signed by Timothy J. Ruggles PE
DN: cn=Timothy J. Ruggles PE, o=Ruggles Engineering Services, ou, email=RES@myfairpoint.net, c=US
Date: 2014.04.28 13:03:08 -04'00'

RUGGLES ENGINEERING SERVICES, INC.
1667 SHADOW LAKE ROAD, GLOVER, VT 05839
Civil Engineering-Site Development
Septic System Design-Soils Analysis
802-525-9130

TEMPORARY DETOUR
A.L. ST. ONGE CONTRACTOR, INC.
HYDE PARK STP CULV(26)
HYDE PARK, VERMONT

DRAWN BY: T.R.	DATE: 04/28/2014
CHECKED BY:	DRAWING NO.: DETOUR PLAN
JOB NO.: 14011	SHEET 1 OF 3

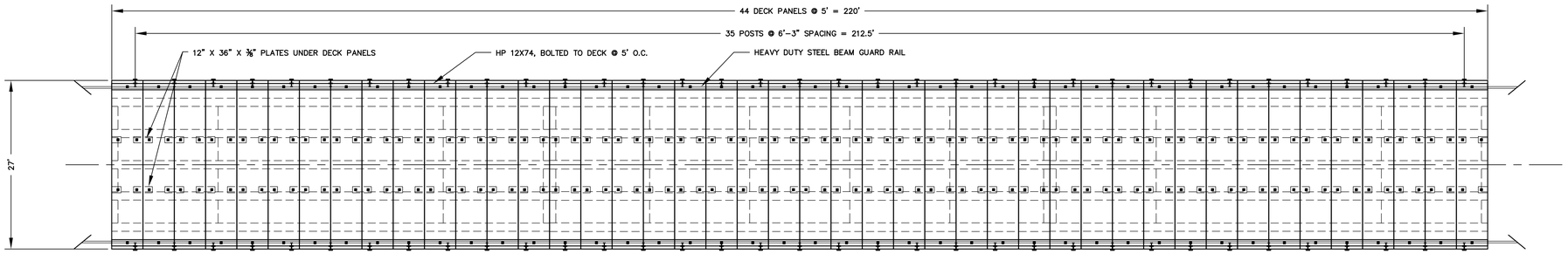

BRIDGE DECK PLAN
1" = 10'

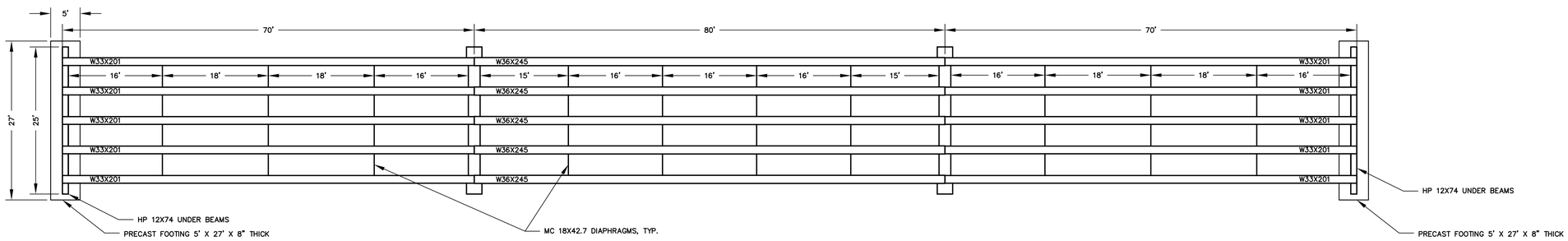

BRIDGE FRAMING PLAN
1" = 10'

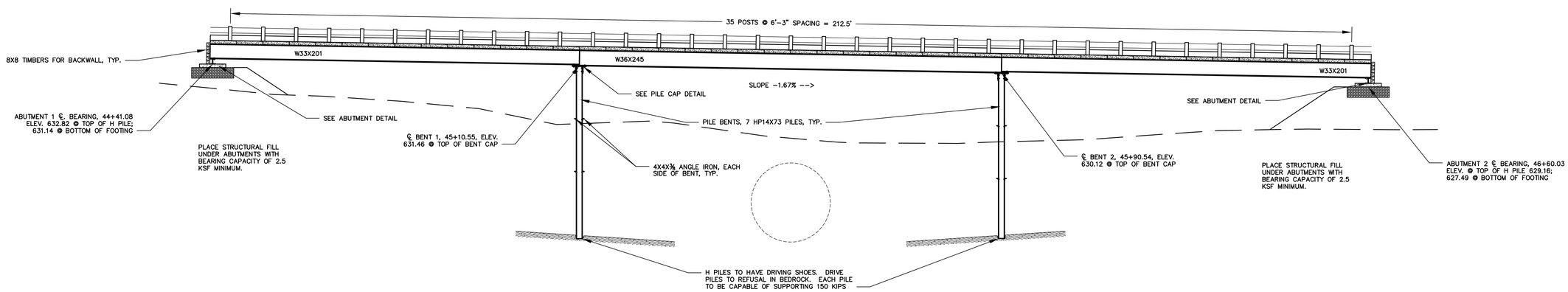

BRIDGE ELEVATION
1" = 10'

0 10' 20'

NO.	DATE	DESCRIPTION	BY
1	04/28/14	REVISED DETOUR PROFILE (ELEVATIONS)	T.R.

RUGGLES
ENGINEERING SERVICES, INC.
1667 SHADOW LAKE ROAD, GLOVER, VT 05839
Civil Engineering-Site Development
Septic System Design-Soils Analysis
802-525-9130

TEMPORARY BRIDGE
A.L. ST. ONGE CONTRACTOR, INC.
HYDE PARK STP CULV(26)
HYDE PARK, VERMONT

DRAWN BY:	T.R.	DATE:	04/28/2014
CHECKED BY:		DRAWING NO.:	BRIDGE PLAN
JOB NO.:	14011	SHEET	2 OF 3

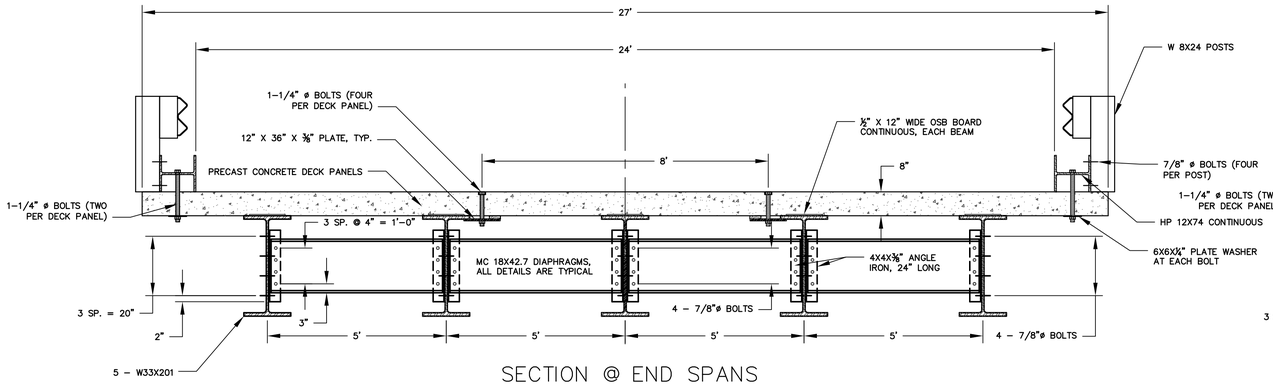

SECTION @ END SPANS
1" = 2'

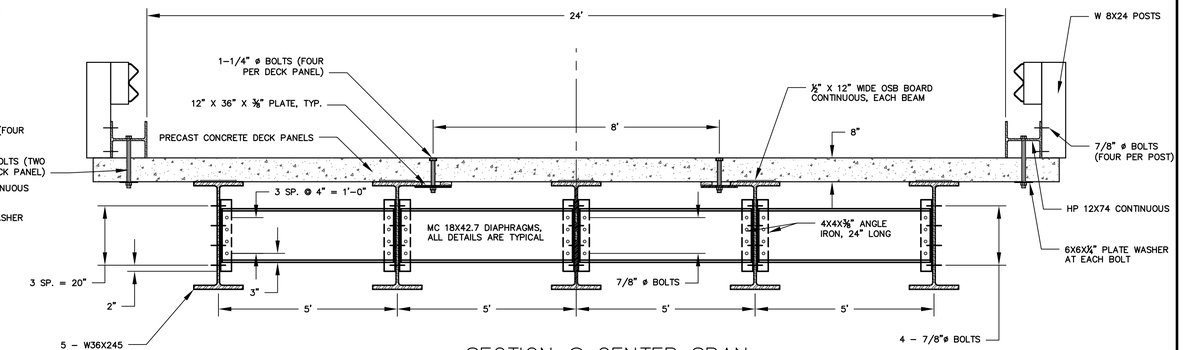

SECTION @ CENTER SPAN
1" = 2'

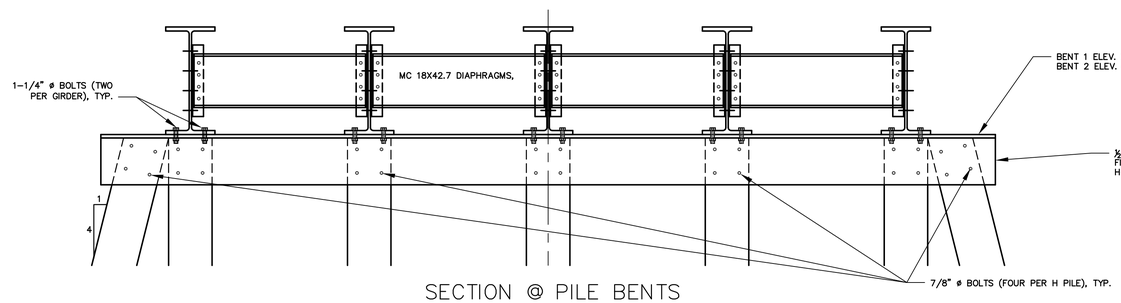

SECTION @ PILE BENTS
1" = 2'

NOTES:

1. ALL BEAMS ARE TO BE IN GOOD CONDITION WITH A MINIMUM YIELD STRENGTH OF 36 KSI.
2. STEEL FOR BRACING SHALL BE NEW OR IN LIKE NEW CONDITION AND ASTM A36 OR STRONGER.
3. BOLTS AND NUTS FOR CONNECTIONS SHALL BE H.S. A-325 WITH ALL HOLES DRILLED. ALL BOLTED CONNECTIONS TO HAVE A FLAT WASHER ON EACH END.
4. CONCRETE FOR PRECAST PANELS SHALL BE CLASS A.
5. REINFORCING STEEL SHALL BE GRADE 60.
6. BRIDGE IS DESIGNED FOR TWO-WAY TRAFFIC, HS-25 LOADING. DESIGN BASED ON CONTRACT DOCUMENTS AND TEMPORARY STRUCTURE CONSIDERATIONS.
7. PRECAST DECK PANELS TO HAVE A 8" NOMINAL DEPTH. PREVIOUSLY DESIGNED BY A.L. ST. ONGE FOR HS-25 LOADING.
8. ALL WELDING TO BE PERFORMED BY QUALIFIED WELDERS USING E70XX OR STRONGER WELDING ELECTRODE.

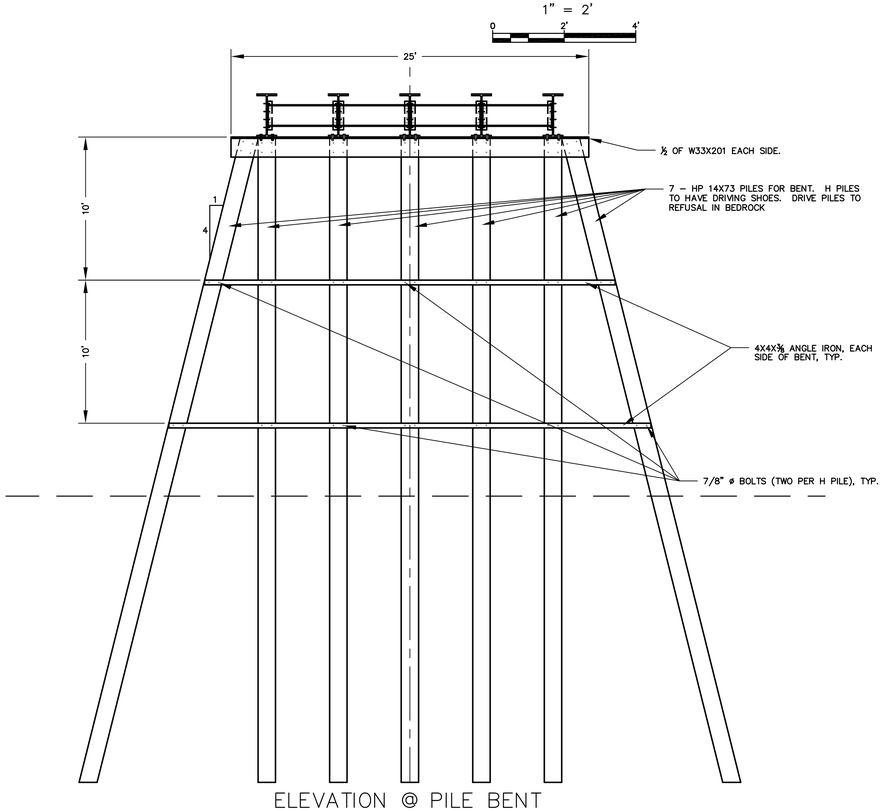

ELEVATION @ PILE BENT
1" = 5'
0 5' 10'

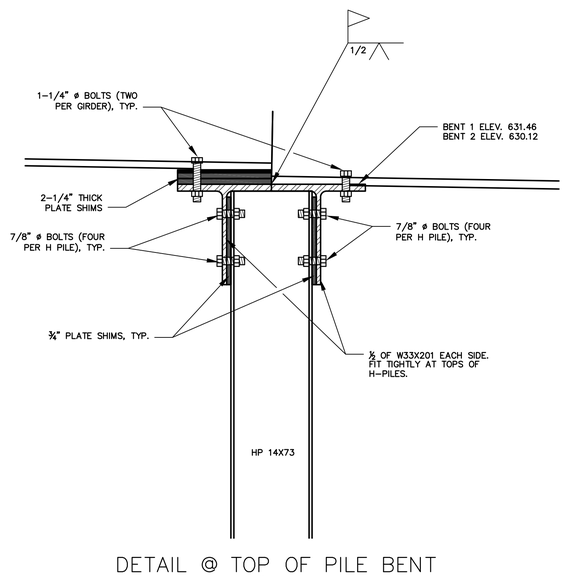

DETAIL @ TOP OF PILE BENT
1" = 1'
0 1' 2'

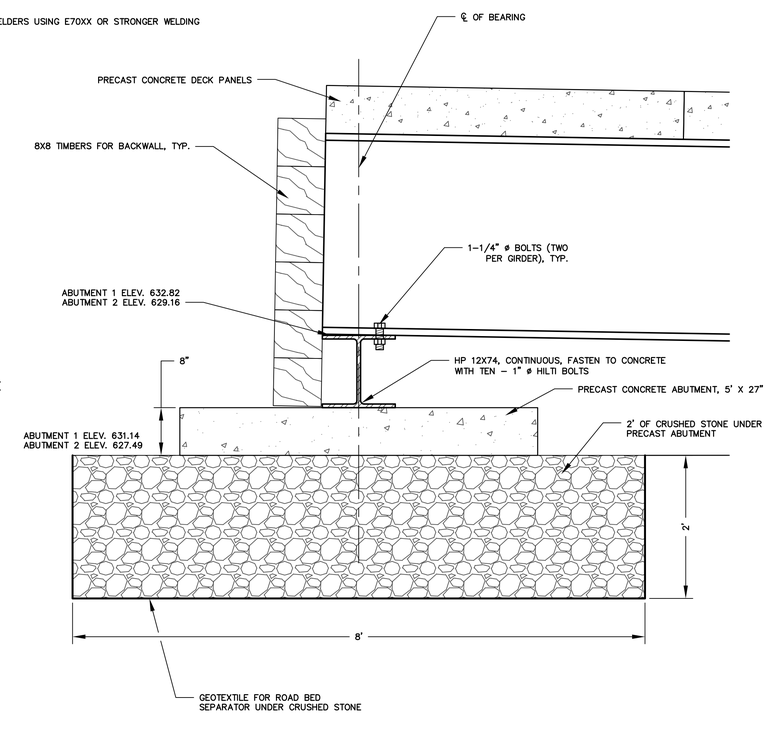

DETAIL @ ABUTMENTS
1" = 1'
0 1' 2'

NO.	DATE	DESCRIPTION	BY
1	04/28/14	REVISED DETOUR PROFILE (ELEVATIONS)	T.R.

RUGGLES ENGINEERING SERVICES, INC.
1067 SHADOW LAKE ROAD, GLOVER, VT 05839
Civil Engineering-Site Development
Septic System Design-Soils Analysis
802-525-9130

TEMPORARY BRIDGE
A.L. ST. ONGE CONTRACTOR, INC.
HYDE PARK STP CULV(26)
HYDE PARK, VERMONT

DRAWN BY: T.R.	DATE: 04/28/2014
CHECKED BY:	DRAWING NO.: SECT/DETAIL
JOB NO.: 14011	SHEET 3 OF 3