Highway Safety Corporation

Glastonbury, CT

Welding Procedure Specification

Material specification: ASTM A709 gr 36/gr 50, ASTM A572 gr.36/gr.50, ASTM A36, A500 gr.B

Welding process: Gas Metal Arc Welding (GMAW) Spray Transfer

Manual, semi-automatic, or automatic: Semi-Automatic

Position of welding: Flat (1F) or Horizontal (2F)

Filler metal specification: AWS A5.18

Filler metal classification: ER70S-6

Electrode and manufacturer: Lincoln Electric Lincoln Weld L-56

Flux and manufacturer: N/A

Shielding gas: 86% Argon / 14% CO2 Flow rate: 35-45 CFM

Single or multiple pass: Single

Single or multiple arc: Single

Welding current: DCEP

Polarity: Reverse - electrode positive

Welding progression: Stringers

Root treatment: clean base metal

Preheat and interpass temperature: base metal up to 3/4" (50°F)

Postheat treatment: None

Electrode extension: 3/4" ± 1/4"

WELDING PROCEDURE

Weld size	Pass no.	Electrode size	Welding parameters Amperes	Welding parameters Volts	Travel speed	Joint detail
1/8	1	.063"	300 A ± 30	29 V ± 2	15 ipm ± 2	TYPICAL FILLET WELDS (5/16" MAX) 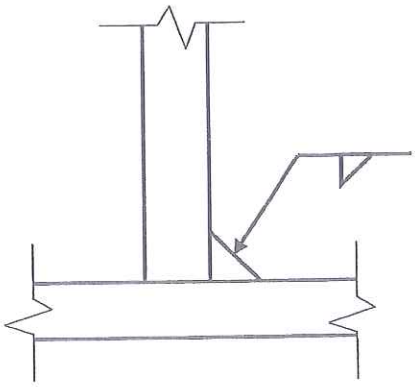
3/16	1	.063"	300 A ± 30	29 V ± 2	15 ipm ± 2	
1/4	1	.063"	300 A ± 30	29 V ± 2	15 ipm ± 2	
5/16	1	.063"	300 A ± 30	29 V ± 2	15 ipm ± 2	

This procedure may vary due to fabrication sequence, fit-up, pass size, etc. within the limitation of variables given in section 5 of latest edition AWS D1.1 / D1.5

AWS Paul A Radice CWI 98070221 QC1 EXP. 7/1/2016

WPS no. W-2030-A

Revision no. 0

Supporting PQR no. Pre-Qualified

Project Name Fairfield, Vermont

Fabricator Highway Safety Corporation

Prepared By: Paul Radice

Date 02-18-15

Project Number BRF0281 (25) / BRO 1448(41)

Highway Safety Corporation

Glastonbury, CT

Welding Procedure Specification

Material specification: ASTM A36, A572 gr 50, A709 Gr 36, ASTM A709 Gr 50, A500 gr B, A53 gr B

Welding process: Gas Metal Arc Welding (GMAW) Spray Transfer

Manual, semi-automatic, or automatic: Semi-Automatic

Position of welding: Flat (1F) or Horizontal (2F)

Filler metal specification: AWS A5.18

Filler metal classification: ER70S-6

Electrode and manufacturer: Lincoln Electric Lincoln Weld L-56

Flux and manufacturer: N/A

Shielding gas: 86% Argon / 14% CO2 Flow rate: 35-45 CFM

Single or multiple pass: Single

Single or multiple arc: Single

Welding current: DCEP

Polarity: Reverse - electrode positive

Welding progression: Stringers

Root treatment: clean base metal

Preheat and interpass temperature: base metal up to 3/4" (50°F)

Postheat treatment: None

Electrode extension: 3/4" ± 1/4"

WELDING PROCEDURE

Weld size	Pass no.	Electrode size	Welding parameters		Travel speed	Joint detail
			Amperes	Volts		
n/a	1	0.063	300 A	29	15 ipm	TC-U4b-GF
			+/- 30	+/- 3	+/- 2	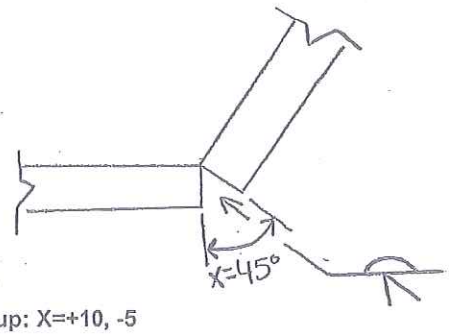 X = 45 As Fitup: X=+10, -5 All Thicknesses

This procedure may vary due to fabrication sequence, fit-up, pass size, etc. within the limitation of variables given in section 5 of latest edition AWS D1.1 / D1.5

AWS Paul A Radice CWI 98070221 QC1 EXP. 7/1/2016

WPS no. W-2030-B

Revision no. 0

Supporting PQR no. Pre-Qualified

Project Name Fairfield, Vermont

Fabricator Highway Safety Corporation

Prepared By: Paul Radice

Date 02-18-15

Project Number BRF0281 (25) / BRO 1448(41)

Highway Safety Corporation

Glastonbury, CT

Welding Procedure Specification

Material specification: ASTM A36, A572 gr 50, A709 Gr 36, ASTM A709 Gr 50, A500 gr B, A53 gr B

Welding process: Gas Metal Arc Welding (GMAW) Spray Transfer

Manual, semi-automatic, or automatic: Semi-Automatic

Position of welding: Flat (1F) or Horizontal (2F)

Filler metal specification: AWS A5.18

Filler metal classification: ER70S-6

Electrode and manufacturer: Lincoln Electric Lincoln Weld L-56

Flux and manufacturer: N/A

Shielding gas: 86% Argon / 14% CO2 Flow rate: 35-45 CFM

Single or multiple pass: Single

Single or multiple arc: Single

Welding current: DCEP

Polarity: Reverse - electrode positive

Welding progression: Stringers

Root treatment: clean base metal

Preheat and interpass temperature: base metal up to 3/4" (50°F)

Postheat treatment: None

Electrode extension: 3/4" ± 1/4"

WELDING PROCEDURE

Weld size	Pass no.	Electrode size	Welding parameters		Travel speed	Joint detail
			Amperes	Volts		
n/a	1	0.063	300 A	29	15 ipm	BTC-P4-GF
			+/- 30	+/- 3	+/- 2	

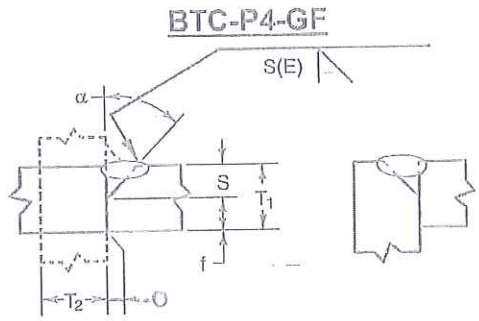

X = 45

As Fitup: X=+10, -5

1/4" min. thk.

f = 1/8"

As Fitup: f=+1/16 S=E

This procedure may vary due to fabrication sequence, fit-up, pass size, etc. within the limitation of variables given in section 5 of latest edition AWS D1.1 / D1.5

Paul A Radice
CWI 98070221
QC1 EXP. 7/1/2016

WPS no. W-2030-C

Revision no. 0

Supporting PQR no. Pre-Qualified

Project Name Fairfield, Vermont

Fabricator Highway Safety Corporation

Prepared By: Paul Radice

Date 02-18-15

Project Number BRF0281 (25) / BRO 1448(41)