REVISIONS					
ZONE	REV	DESCRIPTION	REVISED BY	DATE	APPROVED

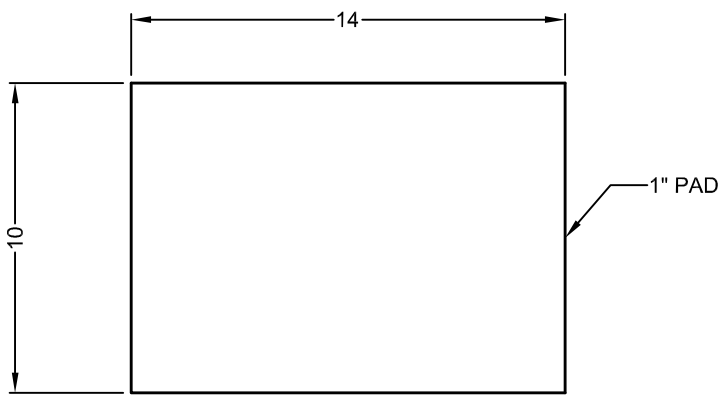

PLAN PAD PLAN VIEW

QTY. REQ'D. = 16

AASHTO GRADE 50 DUROMETER

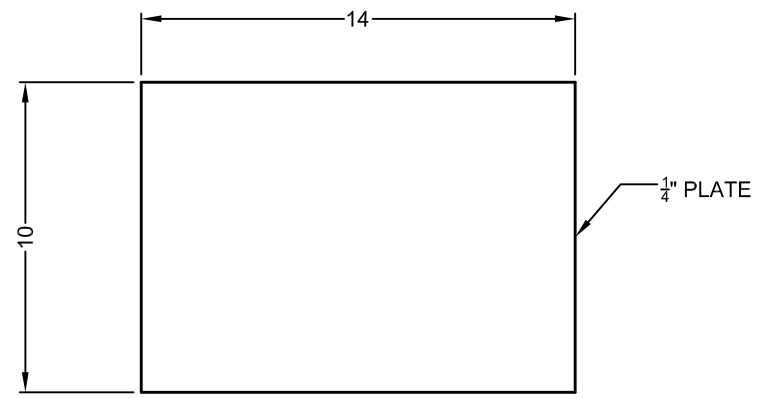

GALVANIZED SHIM PLATE PLAN VIEW

QTY. REQ'D. = 16

ASTM 572 GR50

NOTES:

1. MANUFACTURING FACILITY LOCATION:
   AMSCOT STRUCTURAL PRODUCTS CORP.
   241 E. BLACKWELL STREET
   DOVER, N.J. 07801

   CONTACT- PETER SOMOGYI
   PH: 973-989-8800
   FAX: 973-989-5651

2. ALL BEARING PADS TO BE MANUFACTURED IN ACCORDANCE WITH AASHTO SECTION 18. THE ELASTOMER SHALL BE GRADE 3 NATURAL RUBBER WITH A DUROMETER HARDNESS OF 50 ± 5, WITH A SHEAR MODULUS OF 110 PSI ± 15%.
3. ALL DIMENSIONS ARE IN INCHES , UNLESS OTHERWISE NOTED.
4. TOLERANCES: THICKNESS -0 +1/8
   PLAN -0 +1/8

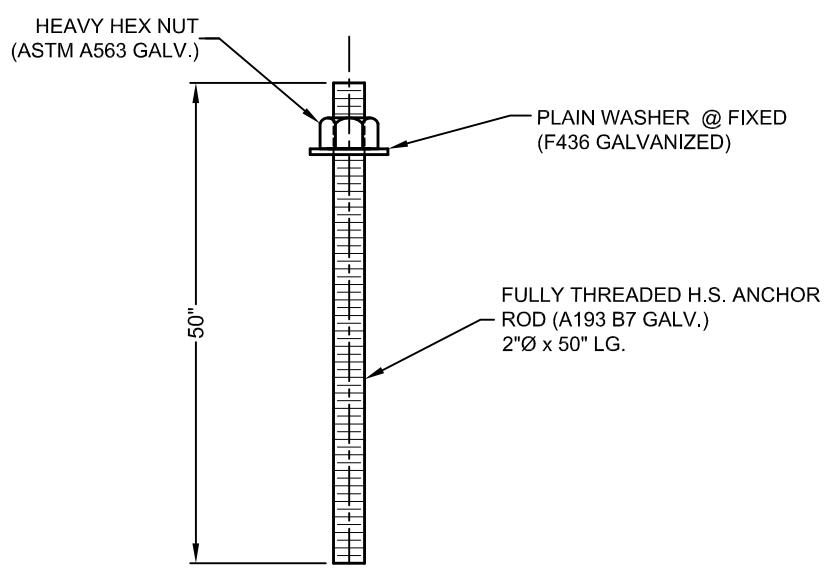

ANCHOR BOLT DETAIL

QTY. REQ'D = 16 ASSY.

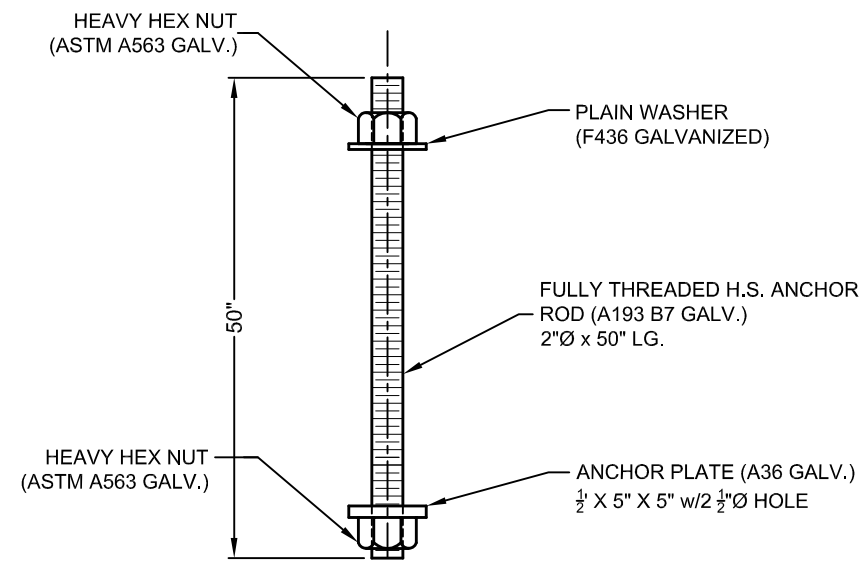

ANCHOR BOLT DETAIL

QTY. REQ'D = 16 ASSY.

Inspection Block
Initial Dim. Check
Sign:_____Date:_____
In Process Dim. Chk.
Sign:_____Date:_____
100% Visual Weld Insp.
Sign:_____Date:_____
Paint Insp.(see form)
Sign:_____Date:_____
Final Inspection
Sign:_____Date:_____

FAIRFIELD
BRO 1448(41)
VERMONT AGENCY OF TRANSPORTATION

FEDERAL PROJECT NO. :

CONTRACT NO. : | PIN NO. :

ELASTOMERIC PAD, SHIM & ANCHOR BOLT DETAILS

AMSCOT
STRUCTURAL PRODUCTS CORP.

SCALE: N.T.S.	APPRV'D:	DRAWN BY: E.J.G.
DATE: 1/13/15	BF	REVISION: O

FOR: A.L. ST. ONGE

DWG NO: ASO15A2RO		SHEET 2 OF 2