1667 SHADOW LAKE ROAD
GLOVER, VT 05839
P 802 525 9130
RES@MYFAIRPOINT.NET

RUGGLES ENGINEERING SERVICES INC.

FAIRFIELD
BRO 1448(38)

COFFERDAM – STEEL SHEETING
CRITICAL DESIGN CALCULATIONS
June 11, 2014

PREPARED FOR:

A.L. ST. ONGE CONTRACTOR, INC.
P.O. BOX 65
MONTGOMERY, VT 05470

ANALYSIS SHEETS	1-8/8
PLAN SHEET (SEPARATE)	1/1

Timothy J. Ruggles PE

Digitally signed by Timothy J. Ruggles PE
DN: cn=Timothy J. Ruggles PE, o=Ruggles Engineering Services, ou, email=RES@myfairpoint.net, c=US
Date: 2014.06.11 15:15:43 -04'00'

1667 SHADOW LAKE ROAD
GLOVER, VT 05839
P 802 525 9130
RES@MYFAIRPOINT.NET

RES

RUGGLES ENGINEERING SERVICES INC.

Analysis Sheet

Date: 6/9/14
By: T.R.
Project: A.L. STONGE - COFFERDAM DESIGN Sheet 1 of 8
FAIRFIELD - BRO 1448 (38)

- TEMPORARY SHEETING FOR ABUTMENTS
- EXISTING GRADE @ 478 +/-
- BOTTOM OF EXCAVATION @ 451.5 (1' BELOW FTG)
- CONTRACTOR TO EXCAVATE DOWN TO ELEV. 471.5 +/- PRIOR TO INSTALLING COFFERDAM
- SO SUPPORTED HEIGHT = 20'
- CONTRACTOR HAS XZ85 STEEL SHEETING (30' LONG)
- CONTRACTOR HAS HP 14X73 FOR WALERS
- SOIL BORINGS INDICATE SILT & CLAY TILL MATERIAL WITH FAIRLY HIGH BLOW COUNTS (BELOW ELEV. 471).

USE H = 25 FOR DESIGN CONSIDERATIONS

USE $\gamma = 130$ PCF

$\gamma_{SAT} = 140$ PCF

$\phi = 30°$

$C = 0$

- NO GROUNDWATER DEPTH INFORMATION IN THE BORINGS - ASSUME GROUND WATER @ 465 +/- = 6' DOWN
- USE 200 lb/ft² SURCHARGE LOAD (CONSTRUCTION EQUIPMENT)
- TOP WALE ABOVE STEM POUR = 464.5
- BOTTOM WALE ABOVE TOP FOOTING = 455.5
- USE ABOVE AS INPUT INTO SHORING PROGRAM. SEE SHEETS 2 → 6 FOR RESULTS.

A.L. St. Onge - Fairfield Cofferdams

2/8

Soil Pressures

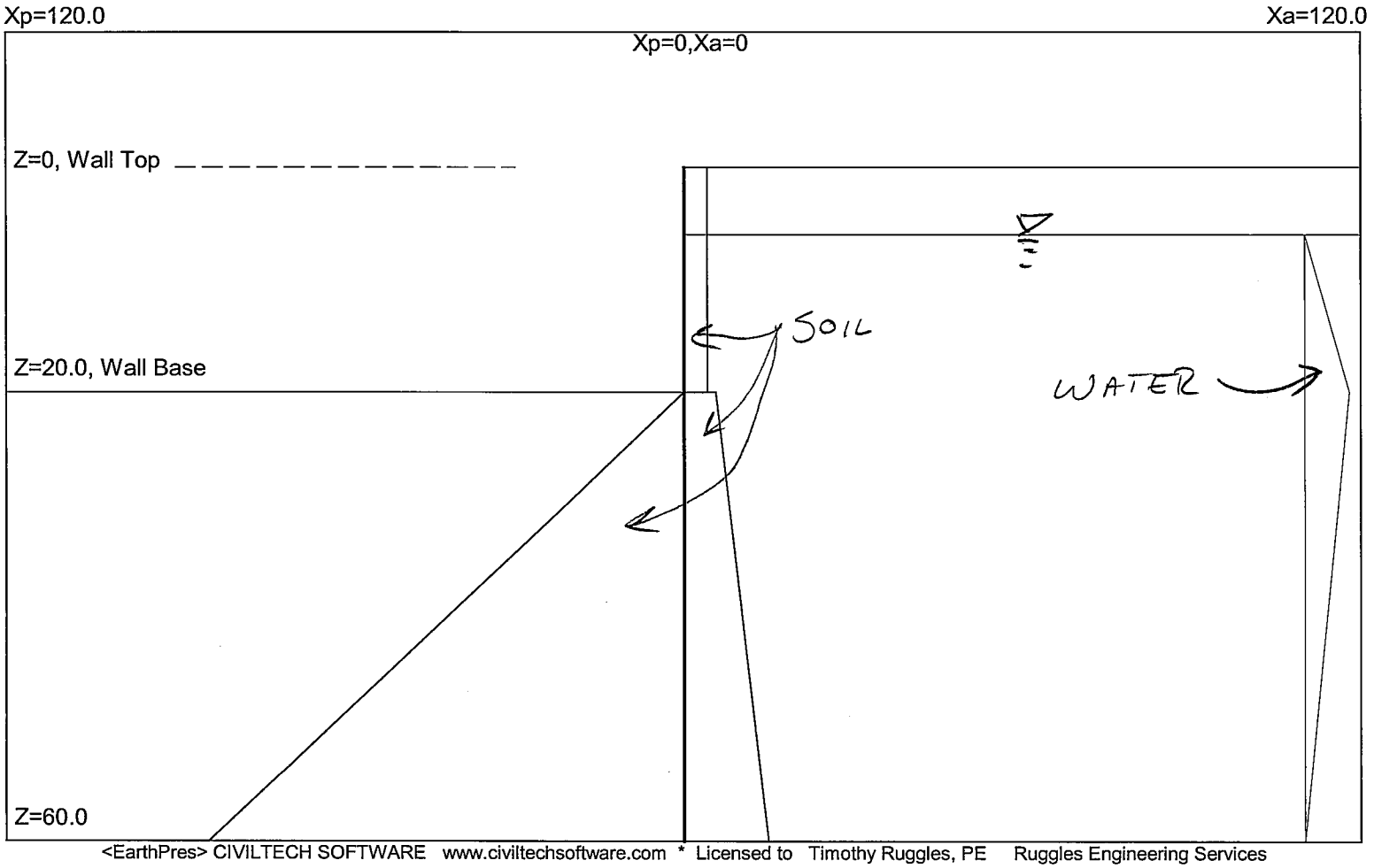

<EarthPres> CIVILTECH SOFTWARE www.civiltechsoftware.com * Licensed to Timothy Ruggles, PE Ruggles Engineering Services
UNITS: DEPTH/DISTANCE: ft, UNIT WEIGHT: pcf, FORCE: kip, PRESSURE: ksf, SLOPE: kcf
Date: 6/10/2014 File: C:\Shoring8\DATA\St. Onge - Fairfax Soils.ep8

* INPUT DATA *

Wall Height=20.0 Total Soil Types= 1

Soil No.	Weight	Saturate	Phi	Cohesion	Nspt	Type	Description
1	130.0	140.0	30.0	0.0	25	3	Silt & Clay

Ground Surface at Active Side:

Line	Z1	Xa1	Z2	Xa2	Soil No.
1	0.0	0.0	0.0	80000.0	1

Water Table at Active Side:

Point	Z-water	X-water
1	6.0	0.0
2	6.0	80000.0

Ground Surface at Passive Side:

Line	Z1	Xp1	Z2	Xp2	Soil No.
1	20.0	0.0	20.0	80000.0	1

Water Table at Passive Side:

Point	Z-water	X-water
1	20.0	0.0
2	20.0	80000.0

Wall Friction Options: 1. No wall friction
Apparent Pressure Conversion: 1. Default (Terzaghi and Peck)*
Water Density = 62.4
Water Pressure: 2. Seepage at wall tip

* OUTPUT RESULTS *

Eae (Total Force above Base)= 6.95
Ea (Total Static Force above Base)= 6.95
Ee (Total Earthquake Force above Base)= 0.00

Apparent Pressure above Base - Output to Shoring - Multiplier of Pressure = 1

No	Z1	Pa1	Z2	Pa2	ka1
0	0.00	0.45	20.00	0.45	0.0000

Driving Pressure below Base - Output to Shoring - Multiplier of Pressure = 1

No	Z1	Pa1	Z2	Pa2	ka1
0	20.00	0.62	60.00	1.66	0.0259

Passive Pressure below Base - Output to Shoring - Multiplier of Pressure = 1

No	Z1	Pp1	Z2	Pp2	kp1
0	20.00	0.0	60.00	9.3	0.233

Water Pressure - Output to Shoring - Multiplier of Pressure = 1

No	Z1	Pw1	Z2	Pw2	kw1
0	6.00	0.00	20.00	0.87	0.06
1	20.00	0.87	60.00	0.00	-0.02

UNITS: DEPTH/DISTANCE: ft, UNIT WEIGHT: pcf, FORCE: kip, PRESSURE: ksf, SLOPE: kcf
Date: 6/10/2014 File Name: C:\Shoring8\DATA\St. Onge - Fairfax Soils.ep8

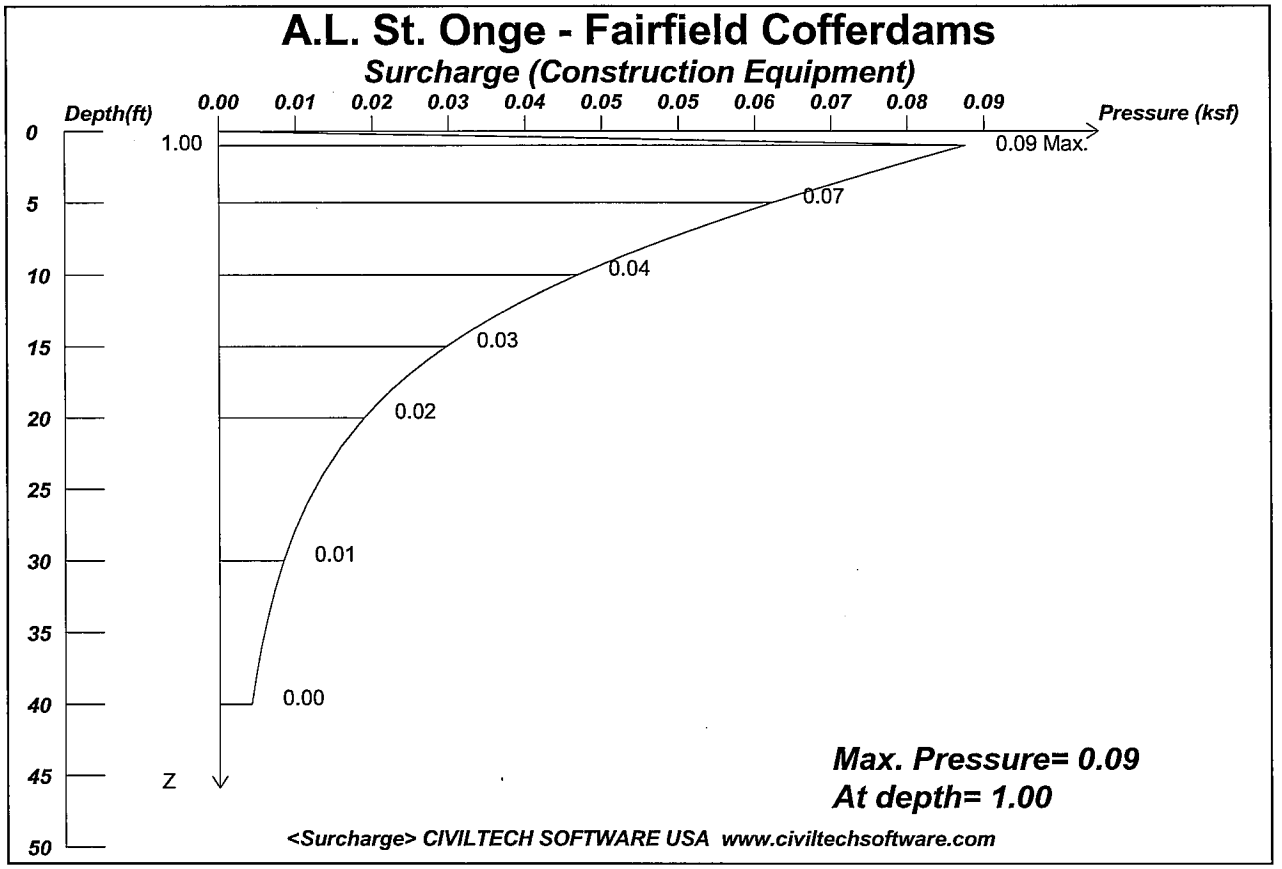

Licensed to Timothy Ruggles, PE Ruggles Engineering Services
Date: 6/10/2014 File: C:\Shoring8\DATA\St. Onge - Fairfax Surcharge.lp8

Wall Height, H= 20 Load Depth at Surface, D= 0
Load Factor of Surcharge Loading = 1
Flexible Wall Condition -- Movement or deflection are allowed.
Max. Pressure = 0.088 at depth = 1.00

X	Width	Length	Area Load
.0	20.0	60.0	.20

UNITS: LENGTH/DEPTH: ft, Qpoint: kip, Qline: kip/ft, Qstrip/Qarea/PRESSURE: ksf

A.L. St. Onge - Fairfield Cofferdams

Sheeting Design

5/8

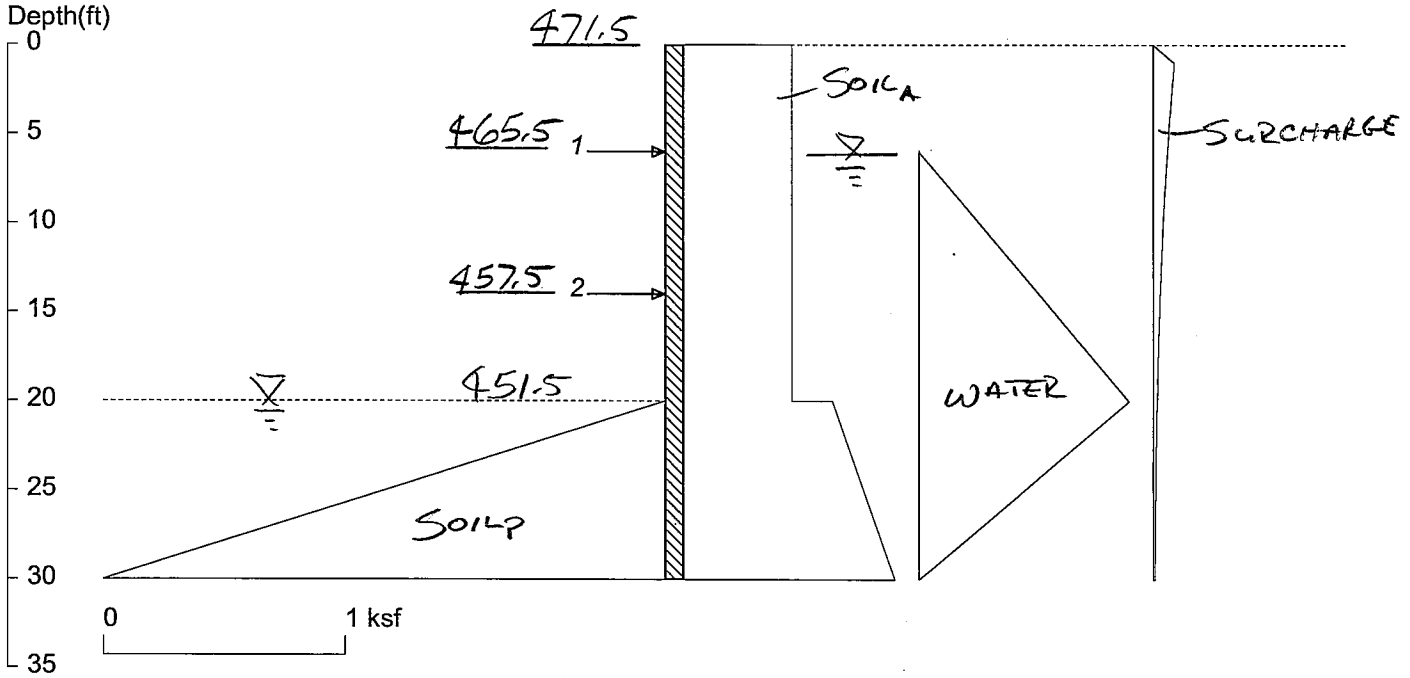

<ShoringSuite> CIVILTECH SOFTWARE USA www.civiltechsoftware.com

Licensed to Timothy Ruggles, PE Ruggles Engineering Services

Date: 6/10/2014 File Name: C:\Shoring8\DATA\St. Onge - Fairfax Sheeting.sh8

Wall Height=20.0 Pile Diameter=1.0 Pile Spacing=1.0 Wall Type: 1. Sheet Pile

PILE LENGTH: Fixed Embedment=10.00, Pile Length=30.00
MOMENT IN PILE: Max. Moment=18.36 per Pile Spacing=1.0 at Depth=20.58

PILE SELECTION:
Request Min. Section Modulus = 9.3 in3/feet, Fy= 36 ksi = 248 MPa, Fb/Fy=0.66
XZ85 has Section Modulus = 30.2. It is greater than Min. Requirements! ✓ -OK

BRACE FORCE: Strut, Tieback, Plate Anchor, and Deadman

No. & Type	Depth	Angle	Space	Total F.	Horiz. F.	Vert. F.	N/A	N/A
1. Strut	6.0	0.0	1.0	7.8*	7.8	0.0	0.0	0.0
2. Strut	14.0	0.0	1.0	9.6	9.6	0.0	0.0	0.0

* Top Brace increased by 15% (DM7.2-103)

UNITS: Width,Diameter,Spacing,Length,Depth,and Height - ft; Force - kip; Bond Strength and Pressure - ksf

DRIVING PRESSURES (ACTIVE, WATER, & SURCHARGE):

No.	Z1	P1	Z2	P2	Slope
1	0.0	0.45	20.0	0.45	0.000
2	20.0	0.62	100.0	2.69	0.026
3	6.0	0.00	20.0	0.87	0.062
4	20.0	0.87	30.0	0.00	-0.087
5	0.0	0.00	1.0	0.09	0.088
6	1.0	0.09	2.0	0.08	-0.006
7	2.0	0.08	3.0	0.08	-0.006
8	3.0	0.08	4.0	0.07	-0.006
9	4.0	0.07	5.0	0.06	-0.005
10	5.0	0.06	6.0	0.06	-0.005
11	6.0	0.06	7.0	0.05	-0.005
12	7.0	0.05	8.0	0.05	-0.005

13	8.0	0.05	9.0	0.05	-0.004
14	9.0	0.05	10.0	0.04	-0.004
15	10.0	0.04	11.0	0.04	-0.004
16	11.0	0.04	12.0	0.04	-0.003
17	12.0	0.04	13.0	0.03	-0.003
18	13.0	0.03	14.0	0.03	-0.003
19	14.0	0.03	15.0	0.03	-0.003
20	15.0	0.03	16.0	0.02	-0.002
21	16.0	0.02	17.0	0.02	-0.002
22	17.0	0.02	18.0	0.02	-0.002
23	18.0	0.02	19.0	0.02	-0.002
24	19.0	0.02	20.0	0.02	-0.002
25	20.0	0.02	22.0	0.01	-0.001
26	22.0	0.01	24.0	0.01	-0.001
27	24.0	0.01	26.0	0.01	-0.001
28	26.0	0.01	28.0	0.01	-0.001
29	28.0	0.01	30.0	0.01	-0.001
30	30.0	0.01	32.0	0.01	-0.001
31	32.0	0.01	34.0	0.01	0.000
32	34.0	0.01	36.0	0.00	0.000
33	36.0	0.00	38.0	0.00	0.000
34	38.0	0.00	40.0	0.00	0.000
35	40.0	0.00	44.0	0.00	0.000
36	44.0	0.00	48.0	0.00	0.000
37	48.0	0.00	52.0	0.00	0.000
38	52.0	0.00	56.0	0.00	0.000
39	56.0	0.00	60.0	0.00	0.000
40	60.0	0.00	64.0	0.00	0.000
41	64.0	0.00	68.0	0.00	0.000
42	68.0	0.00	72.0	0.00	0.000
43	72.0	0.00	76.0	0.00	0.000
44	76.0	0.00	80.0	0.00	0.000

PASSIVE PRESSURES:

No.	Z1	P1	Z2	P2	Slope
1	20.0	0.00	100.0	18.62	0.233

ACTIVE SPACING:

No.	Z depth	Spacing
1	0.00	1.00
2	20.00	1.00

PASSIVE SPACING:

No.	Z depth	Spacing
1	20.00	1.00

UNITS: Width,Spacing,Diameter,Length,and Depth - ft; Force - kip; Moment - kip-ft
Friction,Bearing,and Pressure - ksf; Pres. Slope - kip/ft3; Deflection - in

1667 SHADOW LAKE ROAD
GLOVER, VT 05839
P 802 525 9130
RES@MYFAIRPOINT.NET

RES

RUGGLES ENGINEERING SERVICES INC.

Analysis Sheet

Date: 6/9/14
By: T.R.
Project: A.L. ST. ONGE - COFFERDAM DESIGN Sheet 7 of 8
FAIRFIELD - BRO 1448 (38)

FROM SHORING PROGRAM:

- ZX 85 HAS $S_x = 30.21 \text{ IN}^3/\text{FT} > 9.31 \text{ IN}^3/\text{FT}$ ∴ OK
- TWO WALERS ARE REQUIRED:
  - TOP WALE @ 465.5 - LOAD = 7.8 K/FT
  - BOTTOM WALE @ 457.5 - LOAD = 9.6 K/FT

ASSUMING HP 14X73 FOR WALES, CALCULATE BRACING REQUIREMENTS:

A.L. ST. ONGE - FAIRFIELD SHEETING 6/10/2014
CALCULATE BRACING FOR WALE:

		WALE LOAD K/FT	WALE SIZE	WALE Sx	BRACE SPACING	BRACE LOAD K	WALE Ix	WALE Deflection
CASE 1	TOP WALE	7.8	14X73	107	14.8	115.6	729	0.40
CASE 2	BOTTOM WALE	9.6	14X73	107	13.4	128.2	729	0.32

- MAXIMUM SPACING - TOP = 14.8 - SAY 15'
- MAXIMUM SPACING - BOTTOM = 13.4 - SAY 14'
  - USE 14' FOR BOTH LEVELS TO KEEP BRACING COORDINATED.
- USE HP 14X73 FOR STRUTS - MAXIMUM STRUT LENGTH IS 19' - CHECK AS COLUMN:

LOAD = 14' X 9.6 K/FT = 134.4 K

HP 14X73 GOOD FOR ≈ 330 K @ 19' ∴ OK

SEE SHEET 8

Column Load Calculator

Steel Member: HP14x73

As	21.4	Area of steel column
L	19	Length of member in feet
l	228	Length of member in inches
K	1.2	Effective Length factor
r	3.49	Least radius of gyration
Cc	126.1	For A36 Steel
Fy	36000	Yield Stress, psi
Kl/r	78.4	Slenderness Ratio
$(Kl/r)^2$	6146.56	
$(Kl/r)^3$	481890.304	
F.S.	1.87	Factor of Safety
Fa	15531	Axial Compression stress (psi)

Allowable Load	332363	pounds	= Fa*As
Allowable Load	332.4	kips	