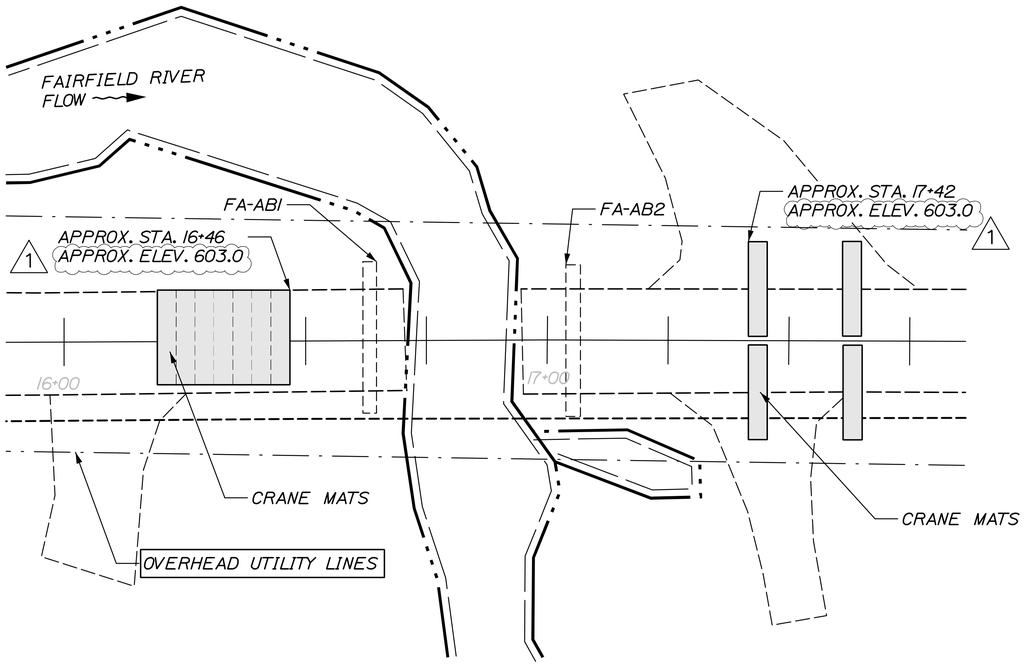

STAGE 1 - INSTALL TEMPORARY BEARING PLATFORMS

1. ONCE SITE PREPARATION IS COMPLETE AND PILES ARE DRIVEN, BEGIN INSTALLATION OF CRANE MATS FOR THE PLACEMENT OF BOTH ABUTMENTS.
2. IT IS IMPERATIVE THAT THE CRANE OPERATORS FAMILIARIZE THEMSELVES WITH THE LOCATION OF THE OVERHEAD UTILITIES ON THE EASTERN SIDE OF THE ROAD. THESE UTILITIES ARE NOT TO BE MOVED OR ALTERED IN ANY WAY.
3. ENSURE ELEVATION AND POSITION OF CRANE MATS ARE APPROPRIATE FOR THE PLACEMENT OF FA-AB1. MAXIMUM RADIUS OF HC-125 WITH ABUTMENT FA-AB1 IS 35 FEET.
4. ENSURE ELEVATION AND POSITION OF CRANE MATS ARE APPROPRIATE FOR THE PLACEMENT OF FA-AB2, AS WELL AS THE PRECAST DECK SLABS. MAXIMUM RADIUS OF HL-150 WITH ABUTMENT FA-AB2 IS 45 FEET.
5. IF UNDESIRABLE SOIL PRESENT IN THE LOCATIONS OF THE CRANE MATS, EXCAVATE 5 FEET, FILL AND COMPACT GRANULAR MATERIAL FOR APPLICABLE AREA.
6. THE CONTRACTOR'S ENGINEER SHALL VERIFY THE STABILITY AND LOCATION OF CRANE MATS.

1

NOTES:
CRANE MATS: 4'-0" x 20'-0" x 1'-0"

HC125 CRANE MAT LAYOUT:
7 MATS LONG x 1 MAT WIDE x 2 MATS DEEP MINIMUM

HL-150 CRANE MAT LAYOUT:
3 MATS STACKED PER OUTRIGGER MINIMUM 1

DIFFERENTLY SIZED CRANE MATS ORGANIZED TO ACHIEVE THE SAME BEARING AREA AND DEPTH MAY BE SUBSTITUTED AT THE DISCRETION OF THE CONTRACTOR'S ENGINEER.

THE GIVEN STATIONING FOR THE CRANE MATS IS APPROXIMATE. EXACT LOCATIONS SHALL BE DETERMINED BY THE CONTRACTOR'S ENGINEER.

1

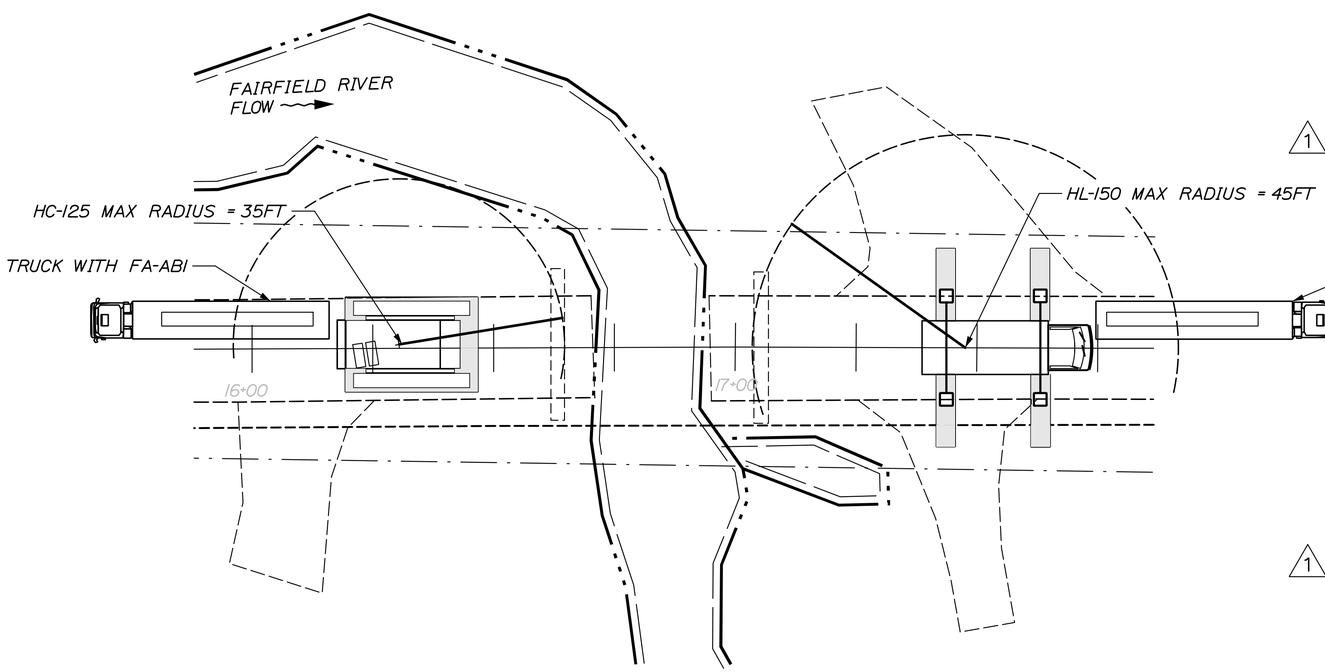

STAGE 2a - INSTALLATION

1. BEGIN INSTALLATION OF FA-AB1, 34.54T WITH HC-125. MAX RADIUS = 35 FEET
2. USE PUSH-PULL BRACES TO STABILIZE ABUTMENT AND TO ENSURE ABUTMENT IS PLUMB. VERIFY EXACT LAYOUT OF ℄ BEARING.
3. ENSURE ELEVATIONS AND POSITIONS ARE CORRECT ON PIECE, INSTALL RAPID SETTING CONCRETE IN ABUTMENT PILE CAVITIES (ITEM 900.607, SPECIAL PROVISIONS)
4. ALLOW CONCRETE TO REACH THE CONTRACT REQUIRED STRENGTH OF 3500 PSI. 1
5. REMOVE TIMBER BLOCKING AND WASTE BLOCKS AT BOTTOM OF ABUTMENT AND PLACE STONE FILL PER CONTRACT DETAILS.
6. LEAVE PUSH-PULL BRACES IN PLACE UNTIL PRESTRESSED SLABS CONNECTED.

STAGE 2b - INSTALLATION

1. BEGIN INSTALLATION OF FA-AB2, 34.54T WITH HL-150. MAX RADIUS = 45 FEET
2. USE PUSH-PULL BRACES TO STABILIZE ABUTMENT AND TO ENSURE ABUTMENT IS PLUMB. VERIFY EXACT LAYOUT OF ℄ BEARING.
3. ENSURE ELEVATIONS AND POSITIONS ARE CORRECT ON PIECE, INSTALL RAPID SETTING CONCRETE IN ABUTMENT PILE CAVITIES (ITEM 900.607, SPECIAL PROVISIONS)
4. ALLOW CONCRETE TO REACH THE CONTRACT REQUIRED STRENGTH OF 3500 PSI. 1
5. REMOVE TIMBER BLOCKING AND WASTE BLOCKS AT BOTTOM OF ABUTMENT AND PLACE STONE FILL PER CONTRACT DETAILS.
6. LEAVE PUSH-PULL BRACES IN PLACE UNTIL PRESTRESSED SLABS CONNECTED.

NOTE:
BOTH ABUTMENTS MAY BE ERECTED AT THE SAME TIME SHOULD THE CONTRACTOR CHOOSE. BOTH ABUTMENTS WILL REQUIRE A DEADMAN STABILIZATION SYSTEM BEFORE PRESTRESSED SLABS ARE ERECTED.

CALDERWOOD ENGINEERING, ETC.
STRUCTURAL ENGINEERING • DETAILING SERVICES
222 RIVER RD. RICHMOND, ME 04357 PH/FX (207)737-2007/(207) 737-2008

PREPARED FOR:
A.L. ST. ONGE CONTRACTOR, INC

VTAOT PROJ. NUMBER BRF-0281(25)
CEE 38-MI-15

STATE OF VERMONT ENG. R. CALDERWOOD LICENSED PROFESSIONAL ENGINEER NO. 8711 Stamp Date

8711
P.E. NUMBER
APR 2015
DATE

	BY	DATE
DESIGN-DETAILED	TEPA	4/15
CHECKED-REVIEWED	GM	4/15
	TEPA	5/15
REVISIONS 1		
REVISIONS 2		
REVISIONS 3		
REVISIONS 4		
FIELD CHANGES		

FAIRFIELD-VT SOUTH ROAD
OVER FAIRFIELD RIVER

ASSEMBLY PLAN

SHEET NUMBER
1

CALDERWOOD ENGINEERING
222 RIVER RD.
RICHMOND, ME 04357
PH/FX (207)737-2007/(207) 737-2008

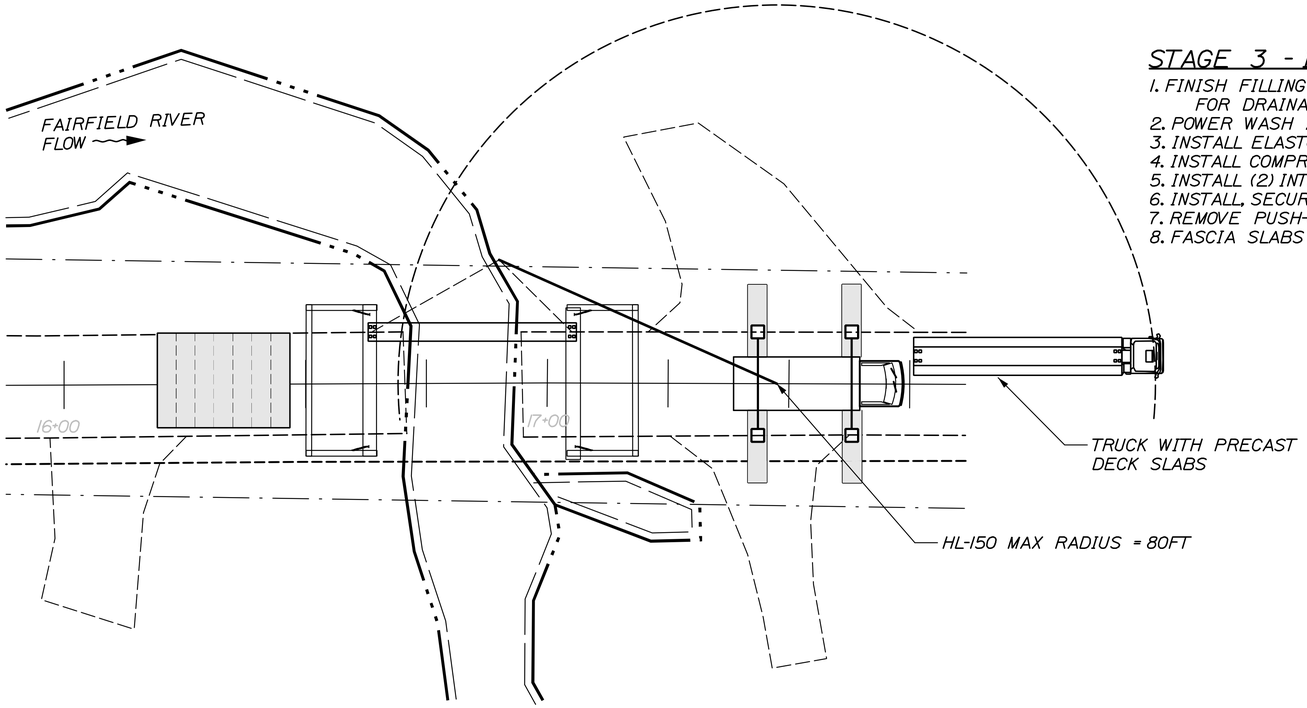

STAGE 3 - INSTALLATION

1. FINISH FILLING RECESS IN PILE CAPS WITH APPROVED GROUT - FINISH TOP WITH PROPER GRADE FOR DRAINAGE.
2. POWER WASH ALL EXTERIOR SURFACES THAT WILL COME INTO CONTACT WITH GROUT.
3. INSTALL ELASTOMERIC BEARING PADS ON FA-AB1 AND FA-AB2.
4. INSTALL COMPRESSIBLE SEALER SELF ADHESIVE IN POST TENSIONING SLEEVES IN DECK SLABS.
5. INSTALL (2) INTERIOR PRECAST CONCRETE DECK SLABS (FA-SS1)
6. INSTALL, SECURE, AND GROUT ANCHOR RODS FOR PLACED INTERIOR SLABS.
7. REMOVE PUSH-PULL BRACES AND PLACE ALL OTHER DECK SLABS.
8. FASCIA SLABS SHALL BE PLACED SNUG AGAINST CORK ON INTERIOR OF CHEEKWALL.

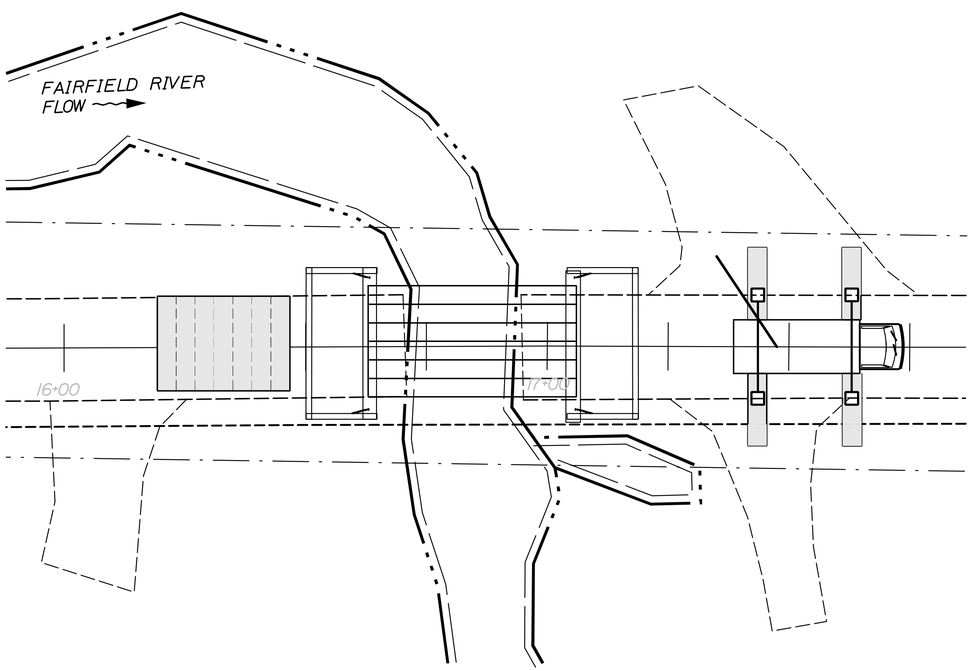

STAGE 4 - INSTALLATION

1. INSTALL AND SECURE REMAINING ANCHOR RODS ACCORDING TO CONTRACT DETAILS.
2. GROUT ANCHOR RODS IN ABUTMENT ANCHOR ROD CAVITIES.
3. INSTALL BACKER RODS BELOW THE BOTTOM OF ALL SHEAR KEYS.
4. INSTALL POST-TENSIONING STRANDS AND TENSION TO 3 KIPS TO REMOVE SAG AND SEAT CHUCK.
5. PUMP GROUT FROM THE LOW END OF THE BRIDGE SEAT THROUGH THE ANCHOR BOLT DUCTS CLOSEST TO THE FASCIA TO FILL THE VOID BETWEEN THE SEAT AND THE BOTTOM OF THE PRECAST DECK SLABS. CONTINUE TO PUMP GROUT UNTIL ALL ANCHOR DUCTS ARE FULL.
6. INSTALL ANCHOR PLATES, WASHERS, AND NUTS FOR ALL ANCHOR BOLTS.
7. GROUT SHEAR KEYS FULLY. ALLOW GROUT TO CURE IN ACCORDANCE WITH SUBSECTIONS 510.13 AND 510.14. THE CONTRACTOR SHALL MOLD AND CURE A SUFFICIENT AMOUNT OF CUBES DURING THE GROUT PLACEMENT FOR TESTING.
8. FULLY TENSION TRANSVERSE TENDONS PER CONTRACT DRAWINGS.

1

CALDERWOOD ENGINEERING, ETC.
STRUCTURAL ENGINEERING • DETAILING SERVICES
222 RIVER RD, RICHMOND, ME 04357 PH/FX (207)737-2007/(207) 737-2008

PREPARED FOR:
A.L. ST. ONGE CONTRACTOR, INC
VTAOT PROJ. NUMBER BRF-0281(25)
CEE 38-MI-15

STATE OF VERMONT
ERIC T. CALDERWOOD
NO. 8711
Structural I
LICENSED
PROFESSIONAL ENGINEER

8711
P.E. NUMBER
APR 2015
DATE

	BY	DATE
DESIGN-DETAILED	TEPA	4/15
CHECKED-REVIEWED	GM	4/15
REVISIONS 1	TEPA	5/15
REVISIONS 2		
REVISIONS 3		
REVISIONS 4		
FIELD CHANGES		

FAIRFIELD-VT SOUTH ROAD
OVER FAIRFIELD RIVER

ASSEMBLY PLAN

SHEET NUMBER
2

CALDERWOOD ENGINEERING
222 RIVER ROAD
RICHMOND, ME 04357
PH. (207) 737-2007 FAX (207) 737-2008

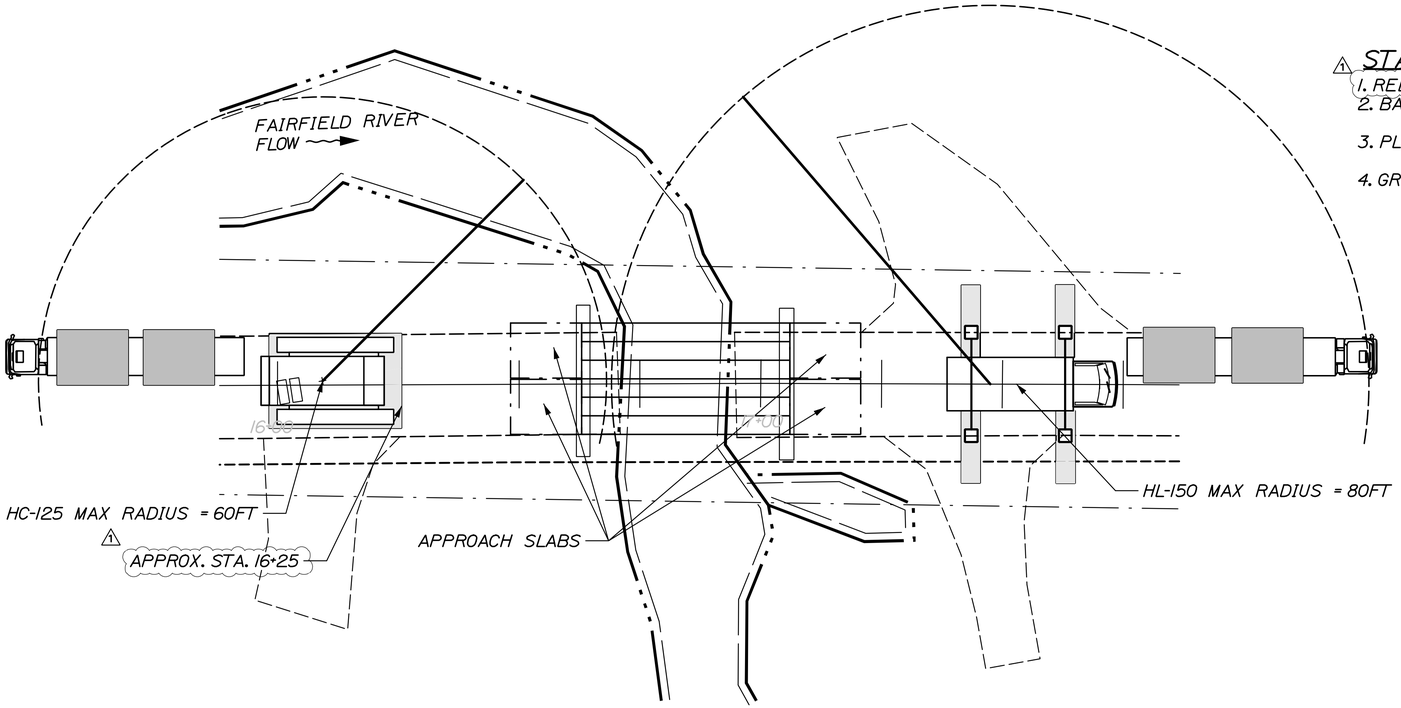

STAGE 5 - INSTALLATION

1. RELOCATE APPROACH SLABS ON FA-AS1 SIDE TO THE LOCATION SHOWN.
2. BACKFILL EXCAVATION ON BOTH APPROACHES AND PREPARE GRADE FOR APPROACH SLAB PLACEMENT.
3. PLACE APPROACH SLABS FA-AS1 (2 SLABS) AND FA-AS2 (2 SLABS) ONTO PROJECTING REBAR FROM ABUTMENT.
4. GROUT PROJECTING REBAR POCKETS. TIE APPROPRIATE REBAR AND PLACE CLOSURE POUR BETWEEN APPROACH SLABS ACCORDING TO CONTRACT DETAILS.

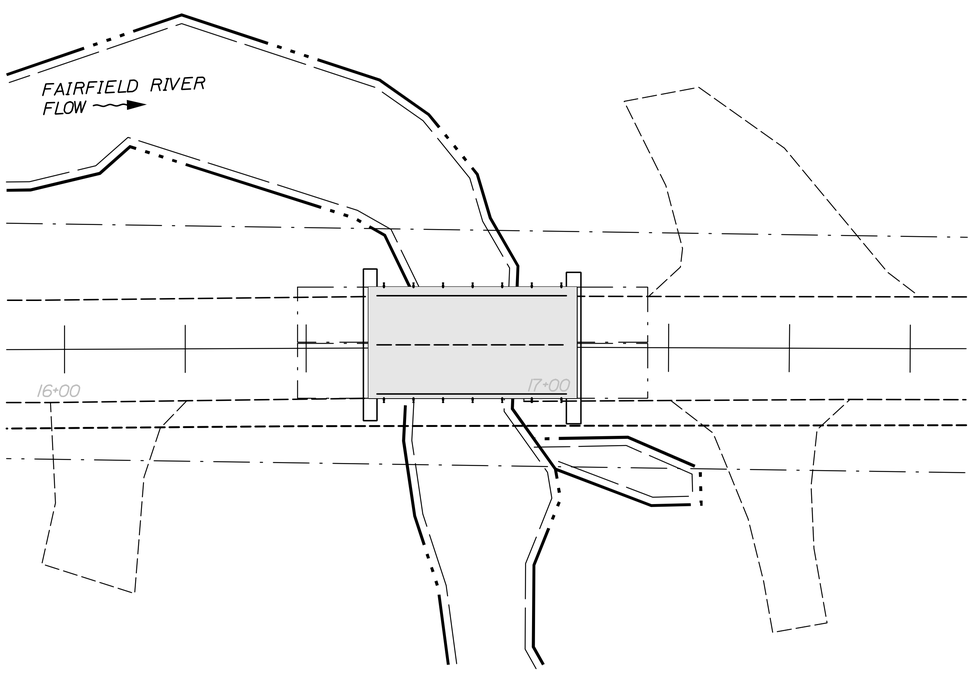

STAGE 6 - INSTALLATION

1. REMOVE CRANE MATS AND FILL TO PROPER APPROACH GRADE.
2. INSTALL BRIDGE RAILING PER CONTRACT DETAILS.
3. APPLY MEMBRANE WATERPROOFING, PAVE AND INSTALL ASPHALTIC PLUG TYPE EXPANSION JOINT.
4. OPEN BRIDGE TO TRAFFIC.

CALDERWOOD ENGINEERING, ETC.
STRUCTURAL ENGINEERING • DETAILING SERVICES
222 RIVER RD, RICHMOND, ME 04357 PH/FX (207)737-2007/(207) 737-2008

PREPARED FOR:
A.L. ST. ONGE CONTRACTOR, INC
VTAOT PROJ. NUMBER BRF-0281(25)
CEE 38-MI-15

STATE OF VERMONT
ERIC T. CALDERWOOD
NO. 8711
Structural I
LICENSED
PROFESSIONAL ENGINEER

8711
P.E. NUMBER
APR 2015
DATE

	BY	DATE
DESIGN-DETAILED	TEPA	4/15
CHECKED-REVIEWED	GM	4/15
REVISIONS 1	TEPA	5/15
REVISIONS 2		
REVISIONS 3		
REVISIONS 4		
FIELD CHANGES		

FAIRFIELD-VT SOUTH ROAD
OVER FAIRFIELD RIVER

ASSEMBLY PLAN

SHEET NUMBER
3

CALDERWOOD ENGINEERING
222 RIVER ROAD
RICHMOND, ME 04357
PH. (207) 737-2007 FAX (207) 737-2008

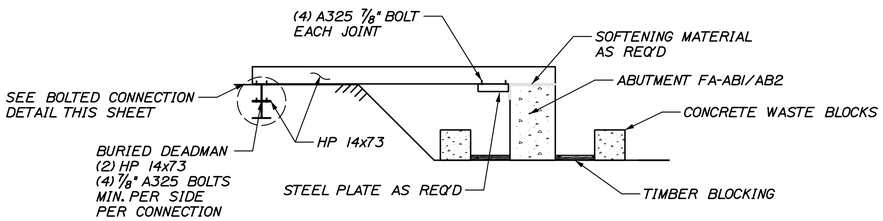

ABUTMENT DEADMAN SET UP SECTION

NOT TO SCALE

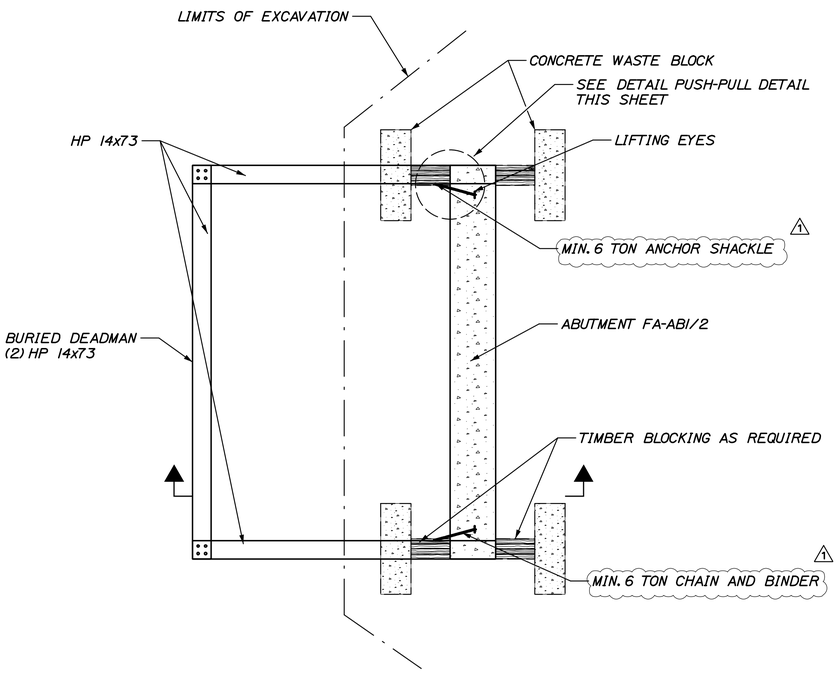

ABUTMENT DEADMAN SET UP PLAN

NOT TO SCALE

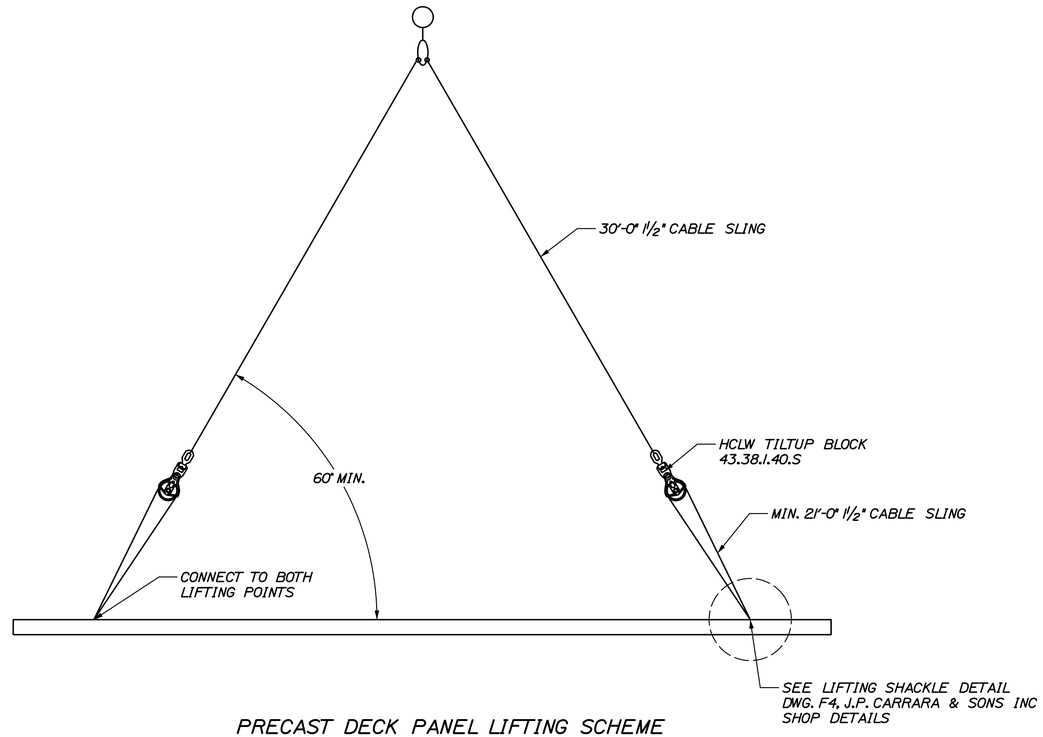

PRECAST DECK PANEL LIFTING SCHEME

NOT TO SCALE

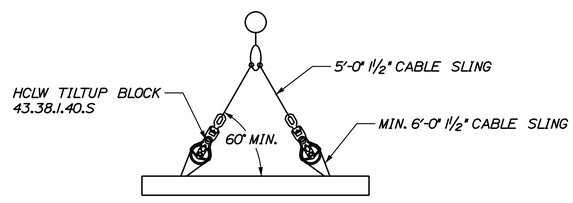

APPROACH SLAB LIFTING SCHEME

NOT TO SCALE

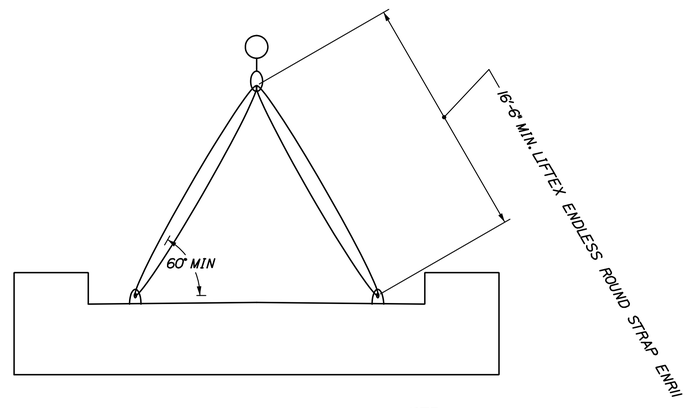

NOTE:
AN EQUIVALENT STRAP MAY BE SUBSTITUTED AT THE CONTRACTORS DISCRETION.

ABUTMENT LIFTING SCHEME

NOT TO SCALE

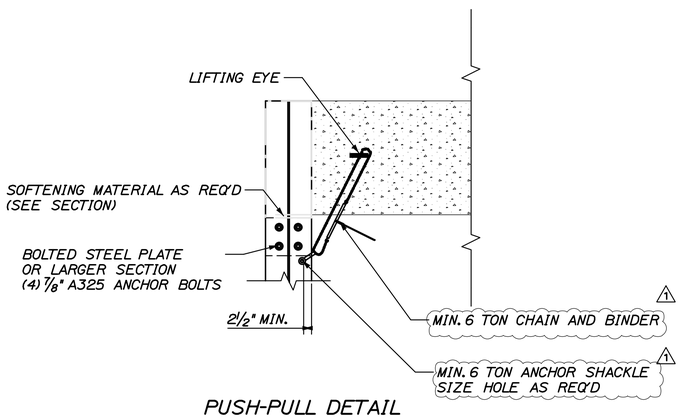

PUSH-PULL DETAIL

NOT TO SCALE

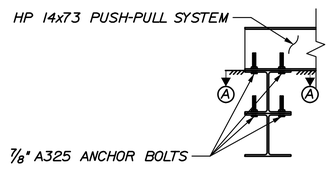

BOLTED CONNECTION DETAIL

NOT TO SCALE

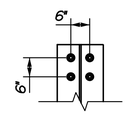

SECTION A

NOT TO SCALE

CALDERWOOD ENGINEERING, ETC.
STRUCTURAL ENGINEERING • DETAILING SERVICES
222 RIVER RD. RICHMOND, ME 04357 PH/FX (207)737-2007/(207) 737-2008

PREPARED FOR:
A.L. ST. ONGE CONTRACTOR, INC
VTAOT PROJ. NUMBER BRF-0281(25)
CEE 38-MI-15

STATE OF VERMONT ERIC T. CALDERWOOD NO. 8711 Stamp Date LICENSED PROFESSIONAL ENGINEER

P.E. NUMBER 8711
DATE APR 2015

	BY	DATE
DESIGN-DETAILED	TEPA	4/15
CHECKED-REVIEWED	GM	4/15
REVISIONS 1	TEPA	5/15
REVISIONS 2		
REVISIONS 3		
REVISIONS 4		
FIELD CHANGES		

FAIRFIELD-VT SOUTH ROAD OVER FAIRFIELD RIVER

MISCELLANEOUS DETAILS

SHEET NUMBER

4

CALDERWOOD ENGINEERING 222 RIVER ROAD RICHMOND, ME 04357 PH/FX (207)737-2007/(207) 737-2008