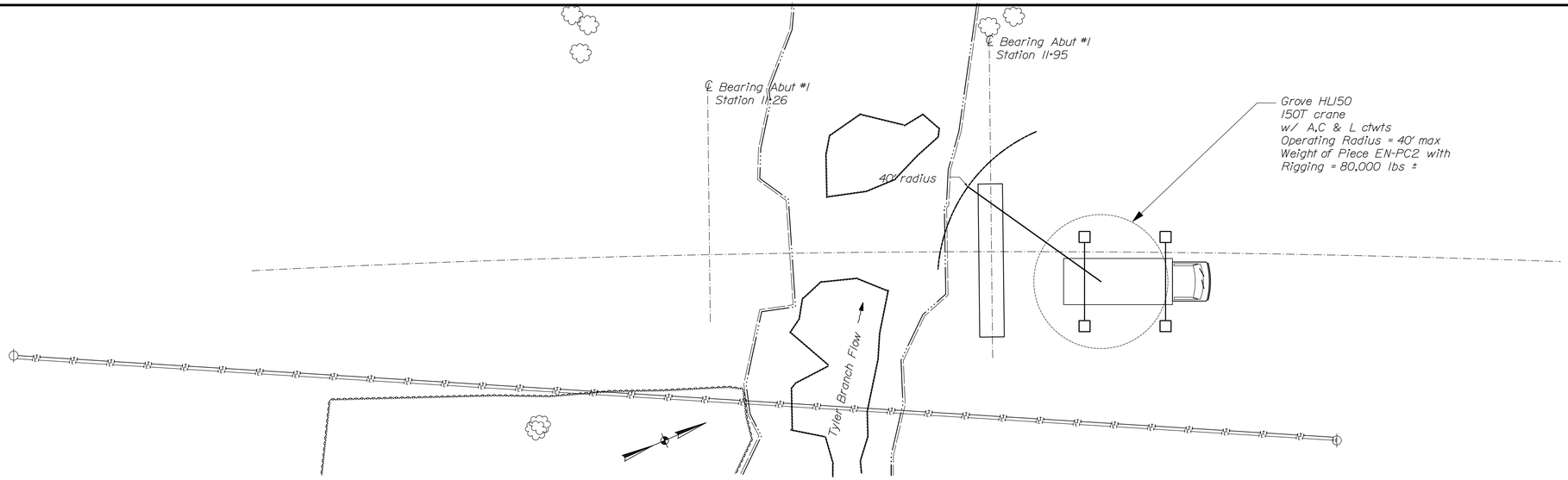

STAGE I - ASSEMBLY

1. ONCE SITE PREPARATION IS COMPLETE BEGIN INSTALLATION WITH PILE CAP PIECE EN-PC2 35.8 T
2. ENSURE ELEVATIONS AND POSITIONS ARE CORRECT ON PIECE, INSTALL RAPID SETTING CONCRETE AROUND MICROPILING PER CONTRACT REQUIREMENTS.
3. ALLOW CONCRETE TO REACH REQUIRED STRENGTH PER CONTRACT REQUIREMENTS OR 2,500 PSI WHICHEVER IS HIGHER PROCEED TO STAGE II
4. VERIFY PROJECTING REINFORCEMENT LENGTHS AND LAYOUTS FOR NMB SPLICE SLEEVES INTO PIECE EN-AB2
5. VERIFY LOCATIONS OF SPLICE SLEEVES IN PIECE EN-AB2
6. INSTALL WASHERS ON PROJECTING REINFORCING TO PREVENT THE INFLOW OF BEDDING GROUT INTO THE SPLICE SLEEVES

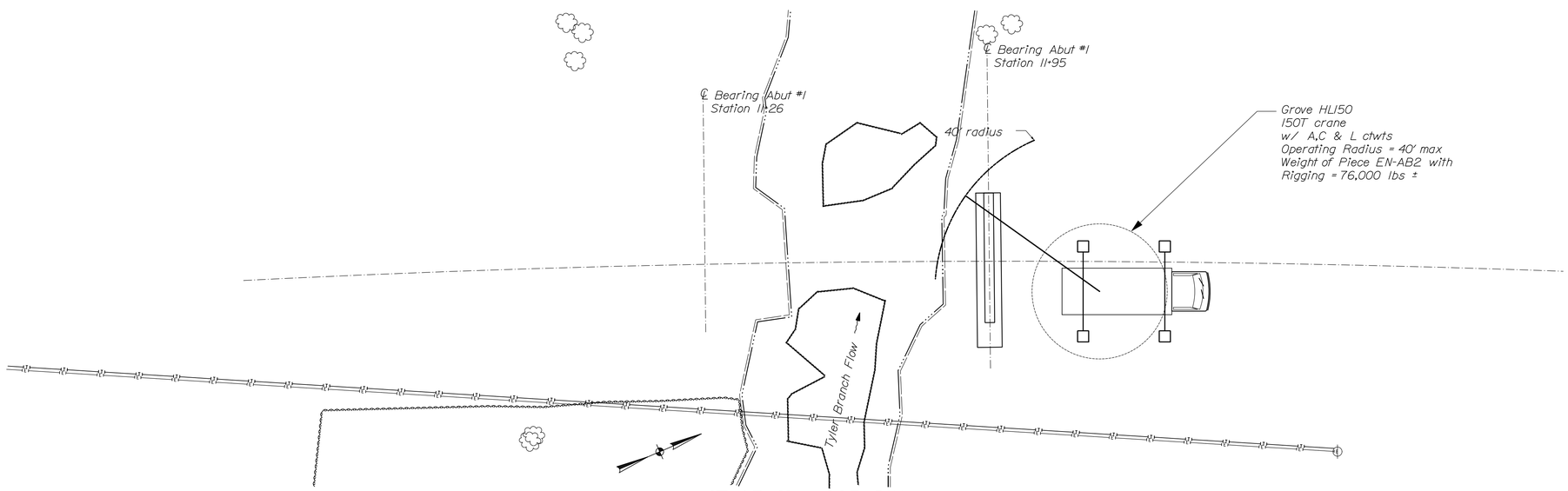

STAGE II - ASSEMBLY

6. INSTALL PIECE EN-AB2 ONTO PILE CAP EN-PC2 USING PLASTIC SHIMS TO ENSURE THE CORRECT ELEVATION CONTROL.
7. USE PUSH PULL BRACES IF REQUIRED TO ENSURE ABUTMENT IS PLUMB, AND TO VERIFY EXACT LAYOUT OF ℄ BEARING.
8. PLACE FLOWABLE GROUT UNDER THE ABUTMENT. BEGIN GROUTING ON ONE SIDE OF THE ABUTMENT AND FLOW GROUT TO THE OTHER SIDE OF THE ABUTMENT, STOP GROUTING WHEN GROUT REACHES APPROXIMATELY 1/8 TO 1/4 " ABOVE THE BOTTOM OF THE ABUTMENT PIECE. DO NOT FILL KEY FULL HEIGHT, DO NOT FILL OVER THE HEIGHT OF THE NMB COUPLER GROUT PORTS.
9. ENSURE BACKUP GROUT PUMPS ARE AVAILABLE ONSITE FOR THE NMB SPLICE SLEEVES. EXTRA PLUGS FOR GROUT PORTS SHOULD BE AVAILABLE AS WELL.
10. INSTALL SS MORTAR IN THE SPLICE SLEEVES PER THE MANUFACTURERS WRITTEN RECOMMENDATIONS. BEGIN AT ONE END OF THE WALL AND WORK CONTINUOUSLY TO THE OTHER END OF PIECE EN-AB2 GROUTING THE NEAR FACE AND FAR FACE SLEEVES AT APPROXIMATELY THE SAME PACE.
11. CURE SS MORTAR IN ACCORDANCE WITH THE MANUFACTURERS RECOMMENDATIONS.
12. VERIFY ABUTMENT PROJECTING REINFORCEMENT FOR WING SPLICE SLEEVES

CALDERWOOD ENGINEERING, ETC.
STRUCTURAL ENGINEERING • DETAILING SERVICES
222 RIVER RD, RICHMOND, ME 04357 PH/FX (207)737-2007/(207) 737-2008

PREPARED FOR:
A.L. ST. ONGE CONTRACTOR, INC
VTAOT PROJ. NUMBER BRO-1448(40)
CEE 70-BR-14

STATE OF VERMONT
ERIC T. CALDERWOOD
NO. 8741
Structural
LICENSED
PROFESSIONAL ENGINEER

P.E. NUMBER
JUL 2014
DATE

	BY	DATE
DESIGN-DETAILED	ETC	7/14
CHECKED-REVIEWED		
REVISIONS 1		
REVISIONS 2		
REVISIONS 3		
REVISIONS 4		
FIELD CHANGES		

ENOSBURG-VT BOSTON POST RD
OVER TYLER BRANCH

SUBSTRUCTURE ASSEMBLY PLAN

SHEET NUMBER
1

CALDERWOOD ENGINEERING
222 RIVER ROAD
RICHMOND, ME 04357
PH (207) 737-2007 FAX (207) 737-2008

Date:7/11/2014
Username: Eric
Workgroup: Structures Division

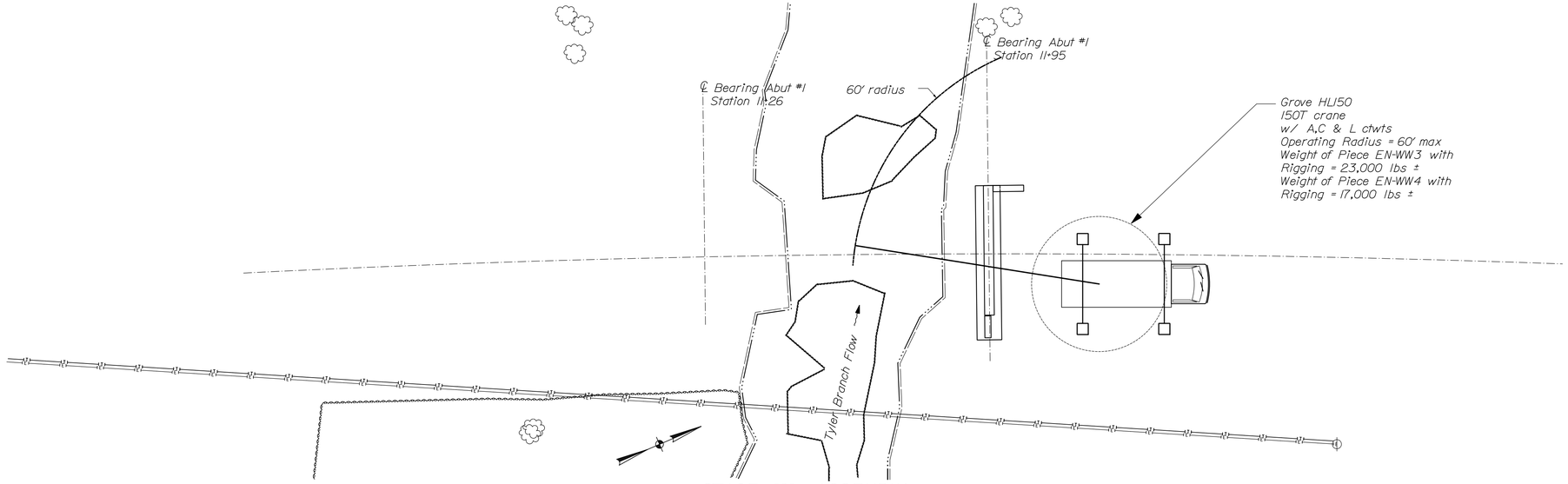

STAGE III - ASSEMBLY

13. INSTALL PIECES EN-WW3 ONTO PIECE EN-AB2 & EN-WW4 ONTO PILE CAP EN-PC2 USING PLASTIC SHIMS TO ENSURE THE CORRECT ELEVATION CONTROL.
14. PLUMB PIECE EN-WW4 AND INSTALL FLOWABLE GROUT UNDER PIECE EN-WW4 AS PER APPLICABLE STEPS FOR ABUTMENT PIECE EN-AB2.
15. INSTALL PIECE EN-WW3.
16. ENSURE LAYOUT OF PIECE EN-WW3 IS CORRECT
17. GROUT SPLICE SLEEVES FOR PIECE EN-WW3 AND EN-WW4 USING SS MORTAR IN ACCORDANCE WITH THE MANUFACTURERS RECOMMENDATIONS
18. GROUT JOINT AND SHEAR KEY BETWEEN ABUTMENT AND EN-WW4. SEAL AND FILL JOINT BETWEEN ABUTMENT AND EN-WW3 WITH EPOXY.
19. ONCE SS MORTAR HAS CURED FOR 24 HOURS BRACING MAY BE REMOVED

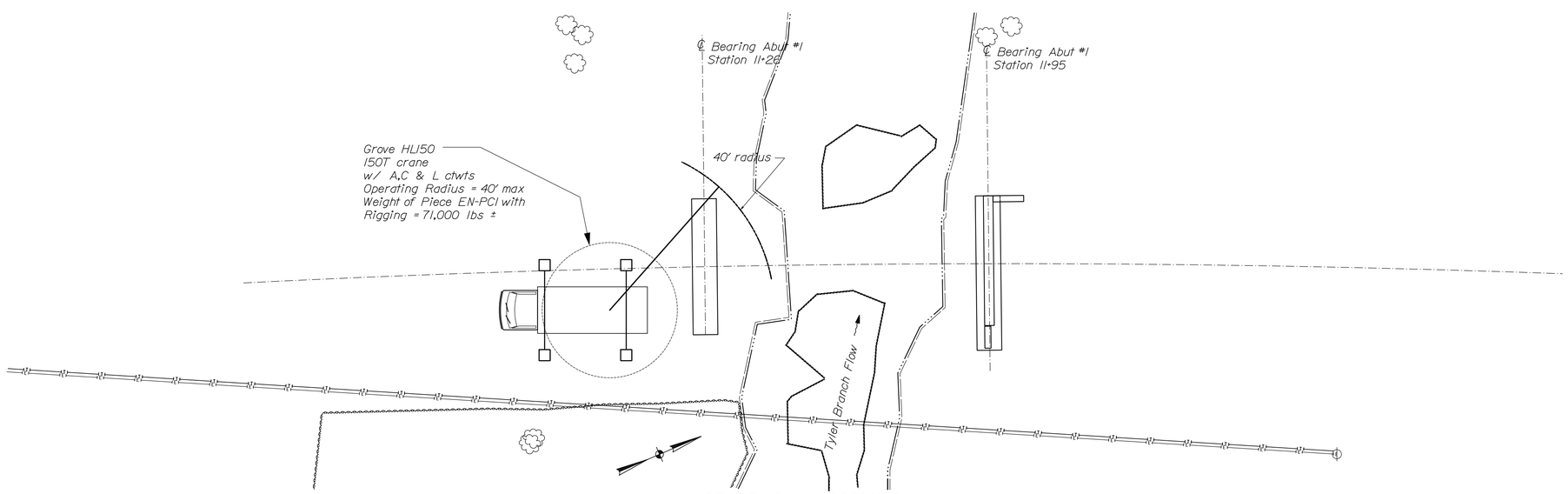

STAGE IV - ASSEMBLY

20. ENSURE ELEVATIONS AND POSITIONS ARE CORRECT ON PIECE. INSTALL RAPID SETTING CONCRETE AROUND MICROPILING PER CONTRACT REQUIREMENTS.
21. ALLOW CONCRETE TO REACH REQUIRED STRENGTH PER CONTRACT REQUIREMENTS OR 2,500 PSI WHICHEVER IS HIGHER PROCEED TO STAGE V
22. VERIFY PROJECTING REINFORCEMENT LENGTHS AND LAYOUTS FOR NMB SPLICE SLEEVES INTO PIECE EN-AB1
23. VERIFY LOCATIONS OF SPLICE SLEEVES IN PIECE EN-AB2
24. INSTALL WASHERS ON PROJECTING REINFORCING TO PREVENT THE INFLOW OF BEDDING GROUT INTO THE SPLICE SLEEVES (RUBBER PLUGS)

CALDERWOOD ENGINEERING, ETC.
STRUCTURAL ENGINEERING • DETAILING SERVICES
222 RIVER RD, RICHMOND, ME 04357 PH/FX (207)737-2007/(207) 737-2008

PREPARED FOR:
A.L. ST. ONGE CONTRACTOR, INC
VTAOT PROJ. NUMBER BRO-1448(40)
CEE 70-BR-14

STATE OF VERMONT — ERIC T. CALDERWOOD — NO. 8743 — Structural — LICENSED PROFESSIONAL ENGINEER

P.E. NUMBER
JUL 2014
DATE

	BY	DATE
DESIGN-DETAILED	ETC	7/14
CHECKED-REVIEWED		
REVISIONS 1		
REVISIONS 2		
REVISIONS 3		
REVISIONS 4		
FIELD CHANGES		

ENOSBURG-VT BOSTON POST RD
OVER TYLER BRANCH

SUBSTRUCTURE ASSEMBLY PLAN

SHEET NUMBER
2

CALDERWOOD ENGINEERING, ETC. — 222 RIVER ROAD — RICHMOND, ME 04357 — PH. (207) 737-2007 FAX (207) 737-2008

Date:7/11/2014
Username: Eric
Workgroup: Structures Division

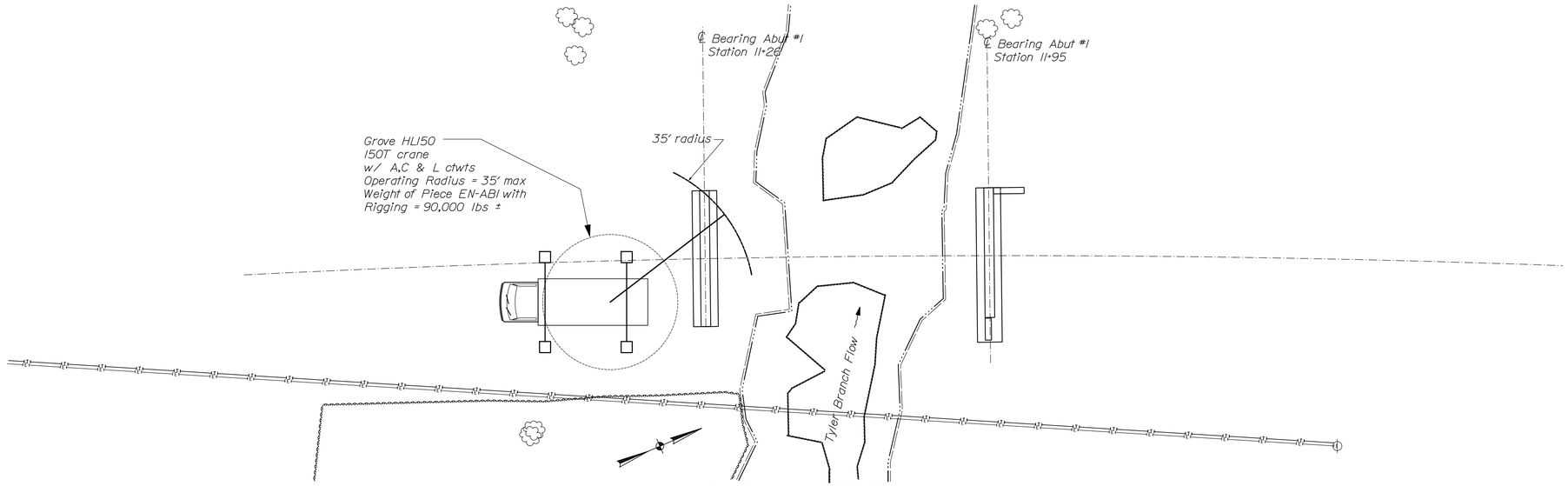

STAGE V - ASSEMBLY

25. INSTALL PIECE EN-AB1 ONTO PILE CAP EN-PC1 USING PLASTIC SHIMS TO ENSURE THE CORRECT ELEVATION CONTROL.
26. USE PUSH PULL BRACES IF REQUIRED TO ENSURE ABUTMENT IS PLUMB, AND TO VERIFY EXACT LAYOUT OF ℄ BEARING.
27. PLACE FLOWABLE GROUT UNDER THE ABUTMENT. BEGIN GROUTING ON ONE SIDE OF THE ABUTMENT AND FLOW GROUT TO THE OTHER SIDE OF THE ABUTMENT. STOP GROUTING WHEN GROUT REACHES APPROXIMATELY 1/8 TO 1/4 " ABOVE THE BOTTOM OF THE ABUTMENT PIECE. DO NOT FILL KEY FULL HEIGHT. DO NOT FILL OVER THE HEIGHT OF THE NMB COUPLER GROUT PORTS.
28. ENSURE BACKUP GROUT PUMPS ARE AVAILABLE ONSITE FOR THE NMB SPLICE SLEEVES. EXTRA PLUGS FOR GROUT PORTS SHOULD BE AVAILABLE AS WELL.
29. INSTALL SS MORTAR IN THE SPLICE SLEEVES PER THE MANUFACTURERS WRITTEN RECOMMENDATIONS. BEGIN AT ONE END OF THE WALL AND WORK CONTINUOUSLY TO THE OTHER END OF PIECE EN-AB1 GROUTING THE NEAR FACE AND FAR FACE SLEEVES AT APPROXIMATELY THE SAME PACE.
30. CURE SS MORTAR IN ACCORDANCE WITH THE MANUFACTURERS RECOMMENDATIONS.
31. VERIFY ABUTMENT PROJECTING REINFORCEMENT FOR WING SPLICE SLEEVES

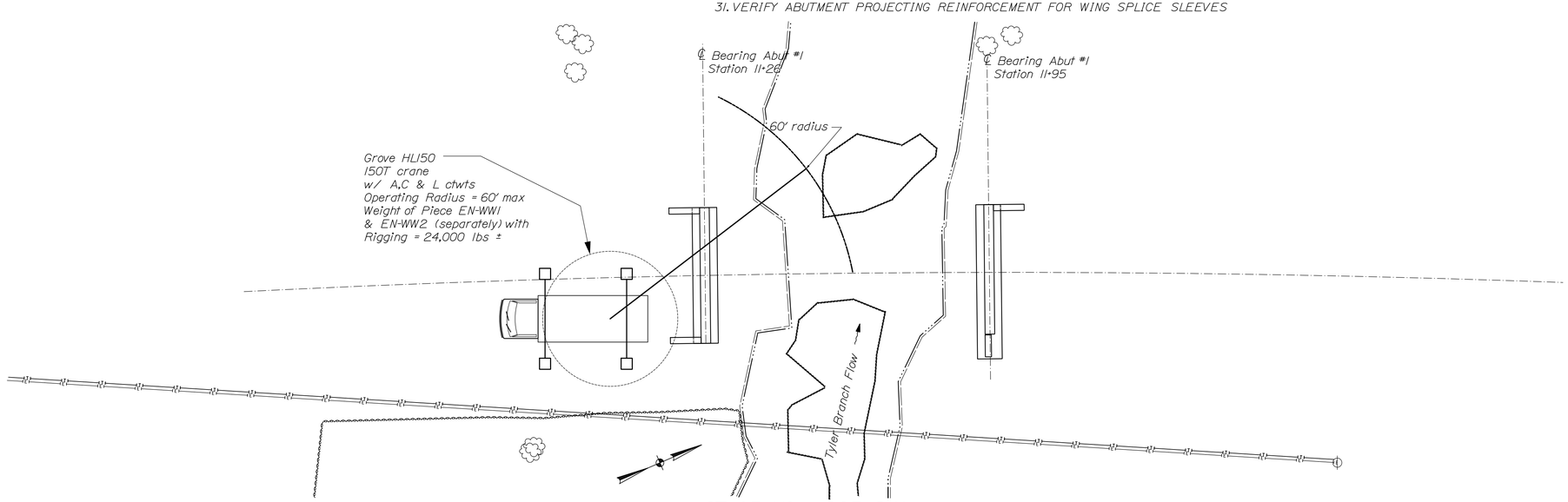

STAGE VI - ASSEMBLY

32. INSTALL PIECES EN-WW1 ONTO PIECE EN-AB1 & EN-WW2 ONTO PIECE EN-AB1
33. ENSURE LAYOUT OF WINGWALL PIECES EN-WW1 AND EN-WW2 ARE CORRECT INSTALL EXTERNAL BRACING TO HOLD PIECES IN THEIR FINAL POSITIONS DURING GROUTING PROCESS.
34. GROUT SPLICE SLEEVES FOR PIECE EN-WW1 AND EN-WW2 USING SS MORTAR IN ACCORDANCE WITH THE MANUFACTURERS RECOMMENDATIONS
35. SEAL AND FILL JOINTS BETWEEN ABUTMENT AND EN-WW1 & EN-WW2 WITH EPOXY.
36. ONCE SS MORTAR HAS CURED FOR 24 HOURS BRACING MAY BE REMOVED

CALDERWOOD ENGINEERING, ETC.
STRUCTURAL ENGINEERING • DETAILING SERVICES
222 RIVER RD, RICHMOND, ME 04357 PH/FX (207)737-2007/(207) 737-2008

PREPARED FOR:
A.L. ST. ONGE CONTRACTOR, INC
VTAOT PROJ. NUMBER BRO-1448(40)
CEE 70-BR-14

STATE OF VERMONT
ERIC T. CALDERWOOD
NO. 8741
Structural
LICENSED
PROFESSIONAL ENGINEER

P.E. NUMBER
JUL 2014
DATE

	BY	DATE
DESIGN-DETAILED	ETC	7/14
CHECKED-REVIEWED		
REVISIONS 1		
REVISIONS 2		
REVISIONS 3		
REVISIONS 4		
FIELD CHANGES		

ENOSBURG-VT BOSTON POST RD
OVER TYLER BRANCH

SUBSTRUCTURE ASSEMBLY PLAN

SHEET NUMBER
3

CALDERWOOD ENGINEERING
222 RIVER ROAD
RICHMOND, ME 04357
PH. (207) 737-2007 FAX (207) 737-2008

Date:7/11/2014
Username: Eric
Workgroup: Structures Division

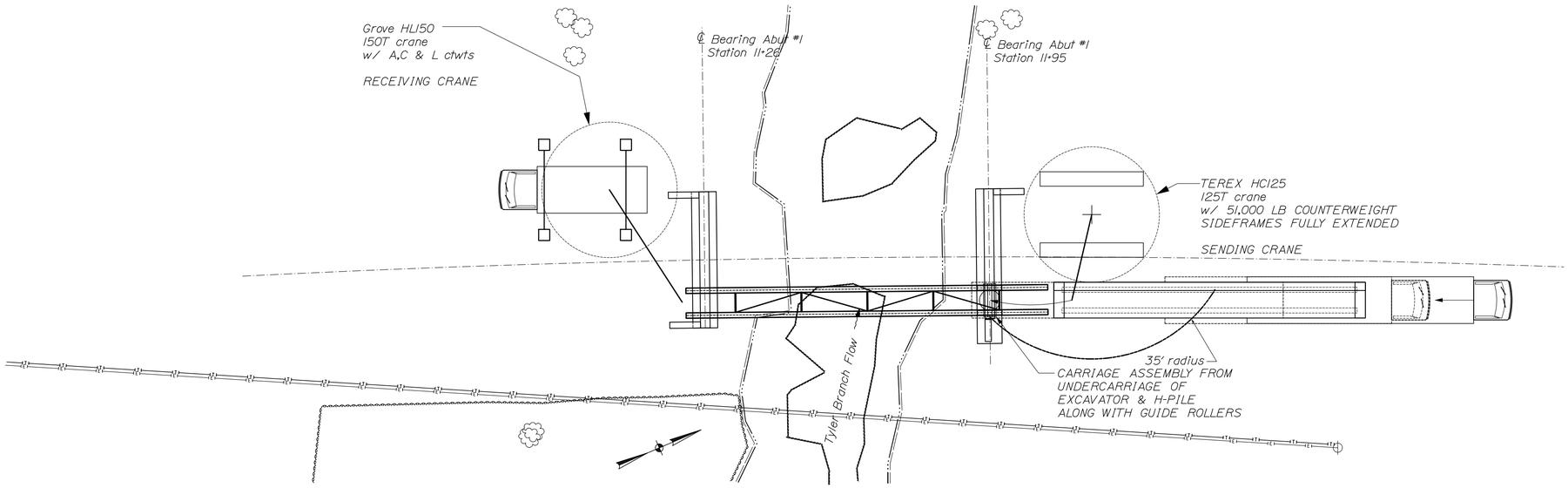

STAGE VII - ASSEMBLY

37. FINISH FILLING RECESS IN PILE CAPS WITH APPROVED GROUT - FINISH TOP TO DRAIN AWAY FROM STEM WALLS - EXACT CONFIGURATION TO BE DETERMINED IN THE FIELD.
38. BACKFILL APPROXIMATELY 1/2 WAY UP THE STEM WALLS ONCE SUFFICIENT GROUT STRENGTH IN THE NMB COUPLER'S HAS BEEN REACHED (SAY 4,000 PSI) OR (1) DAYS CURE AT 68 DEGREES MIN.
39. INSTALL 73'-0" OVERALL LENGTH SLIDER BEAM AND ROLLING CARRIAGE ASSEMBLY FROM ABUTMENT #2 TO ABUTMENT #1.
40. PICK ONE END OF NEXT BEAM WEST FASCIA NEXT BEAM. FROM DELIVERY REMOVABLE DOLLY MAX LOAD = 70,000 LBS (1/2 BEAM WEIGHT) LEAVE (1/2 BEAM SUPPORTED ON TRUCK). USING TEREX HC125 MAXIMUM RADIUS = 35 FOOT RADIUS) REMOVE DOLLY USING SUPPLEMENTAL EQUIPMENT AVAILABLE AS REQUIRED.
41. PLACE END OF NEXT BEAM ON HARDWOOD TIMBER BLOCKING ON TOP OF CARRIAGE ASSEMBLY - BACKING DELIVERY TRACTOR UP SLOWLY TO ACCOMODATE PLACEMENT OF NEXT BEAM ABUTMENT #1 END ON THE SLIDER BEAM CARRIAGE ASSEMBLY.
42. BACK DELIVERY TRACTOR UP, BACKING BEAM OVER SLIDING ASSEMBLY UNTIL THE ABUTMENT #2 END OF THE BEAM IS WITHIN 35' RADIUS OF THE CENTERPIN OF THE TEREX.

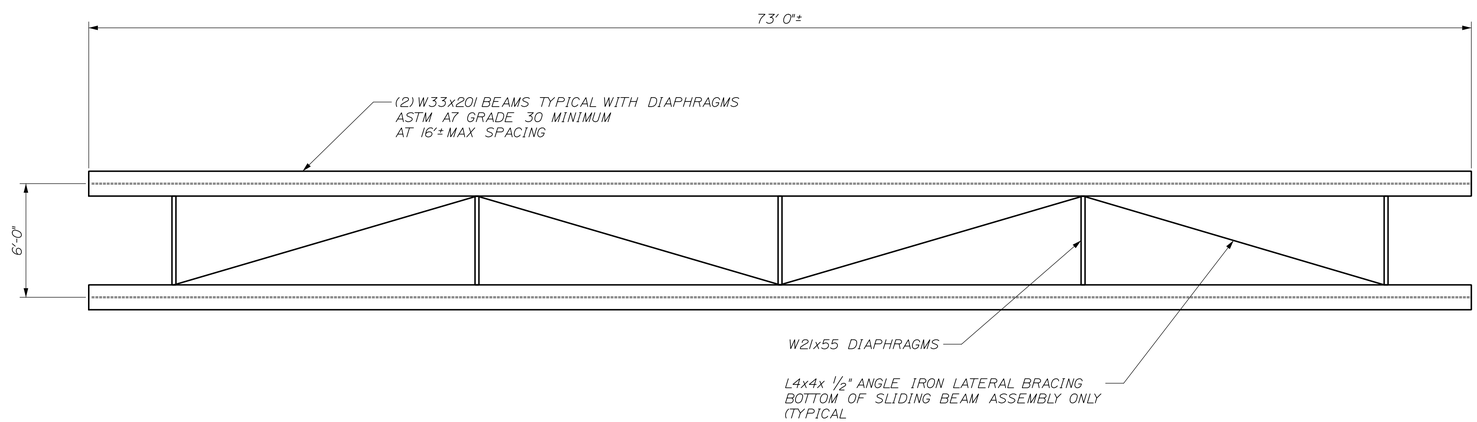

SLIDING BEAM ASSEMBLY

CALDERWOOD ENGINEERING, ETC.
STRUCTURAL ENGINEERING • DETAILING SERVICES
222 RIVER RD, RICHMOND, ME 04357 PH/FX (207)737-2007/(207) 737-2008

PREPARED FOR:
A.L. ST. ONGE CONTRACTOR, INC
VTAOT PROJ. NUMBER BRO-1448(40)
CEE 70-BR-14

STATE OF VERMONT
ERIC T. CALDERWOOD
NO. 8741
Structural
LICENSED
PROFESSIONAL ENGINEER

P.E. NUMBER
JUL 2014
DATE

	BY	DATE
DESIGN-DETAILED	ETC	7/14
CHECKED-REVIEWED		
REVISIONS 1		
REVISIONS 2		
REVISIONS 3		
REVISIONS 4		
FIELD CHANGES		

ENOSBURG-VT BOSTON POST RD
OVER TYLER BRANCH

SUPERSTRUCTURE ASSEMBLY PLAN

SHEET NUMBER
4

CALDERWOOD ENGINEERING
222 RIVER ROAD
RICHMOND, ME 04357
PH. (207) 737-2007 FAX (207) 737-2008

Date:7/16/2014
Username: Eric
Workgroup: Structures Division

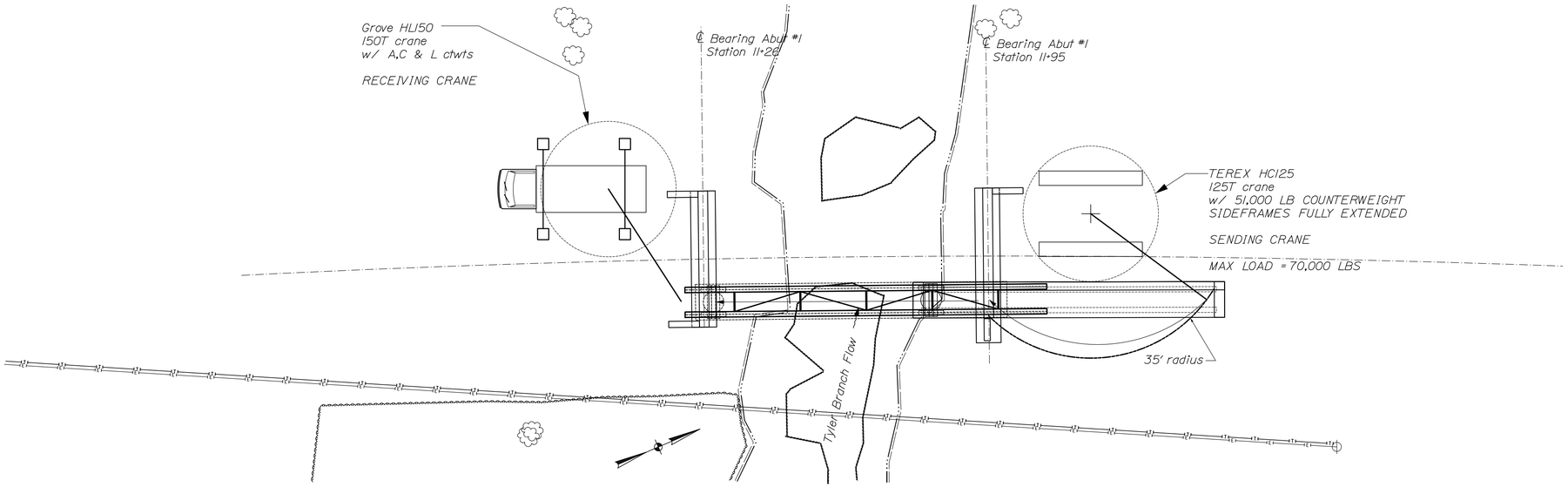

STAGE VIII - ASSEMBLY

43. RE-RIG TEREX HC125 TO ABUTMENT #2 END OF WEST FASCIA NEXT BEAM (35' MAXIMUM RADIUS)
44. WITH TEREX SUPPORTING ABUTMENT #2 END OF BEAM SLOWLY SWING AND ALLOW ABUTMENT #1 END TO ROLL ACROSS THE SLIDER BEAM ON THE SUPPORTING CARRIAGE AND SLIDER BEAM ASSEMBLY.

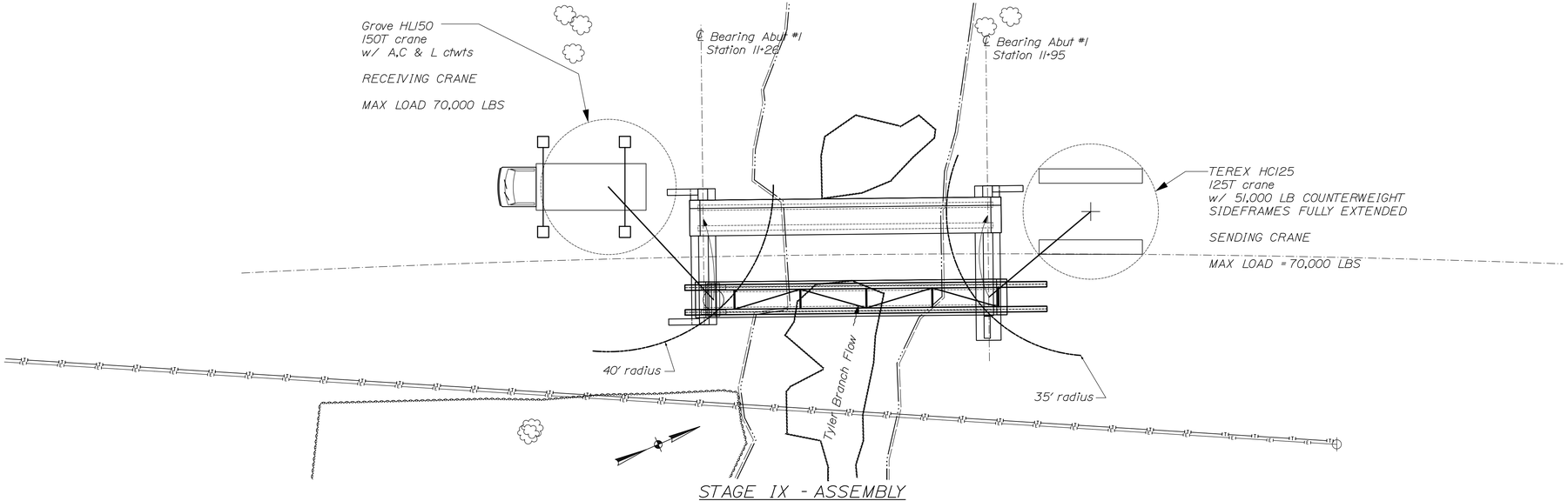

STAGE IX - ASSEMBLY

45. RIG GROVE HL150 TO ABUTMENT #1 END OF WEST FASCIA NEXT BEAM (40' MAXIMUM RADIUS)
46. WITH BOTH CRANES SLOWLY SWING BEAM INTO PLACE, AND SET BEAM IN ITS FINAL LAYOUT POSITION ON THE BEARINGS. VERIFY LAYOUT PRIOR TO CUTTING THE CRANES LOOSE.

CALDERWOOD ENGINEERING, ETC.
STRUCTURAL ENGINEERING • DETAILING SERVICES
222 RIVER RD, RICHMOND, ME 04357 PH/FX (207)737-2007/(207) 737-2008

PREPARED FOR:
A.L. ST. ONGE CONTRACTOR, INC
VTAOT PROJ. NUMBER BRO-1448(40)
CEE 70-BR-14

STATE OF VERMONT
ERIC T. CALDERWOOD
NO. 8741
Structural
LICENSED
PROFESSIONAL ENGINEER

P.E. NUMBER
JUL 2014
DATE

	BY	DATE
DESIGN-DETAILED	ETC	7/14
CHECKED-REVIEWED		
REVISIONS 1		
REVISIONS 2		
REVISIONS 3		
REVISIONS 4		
FIELD CHANGES		

ENOSBURG-VT BOSTON POST RD
OVER TYLER BRANCH

SUPERSTRUCTURE ASSEMBLY PLAN

SHEET NUMBER
5

CALDERWOOD ENGINEERING
222 RIVER ROAD
RICHMOND, ME 04357
PH. (207) 737-2007 FAX (207) 737-2008

Date:7/16/2014
Username: Eric
Workgroup: Structures Division

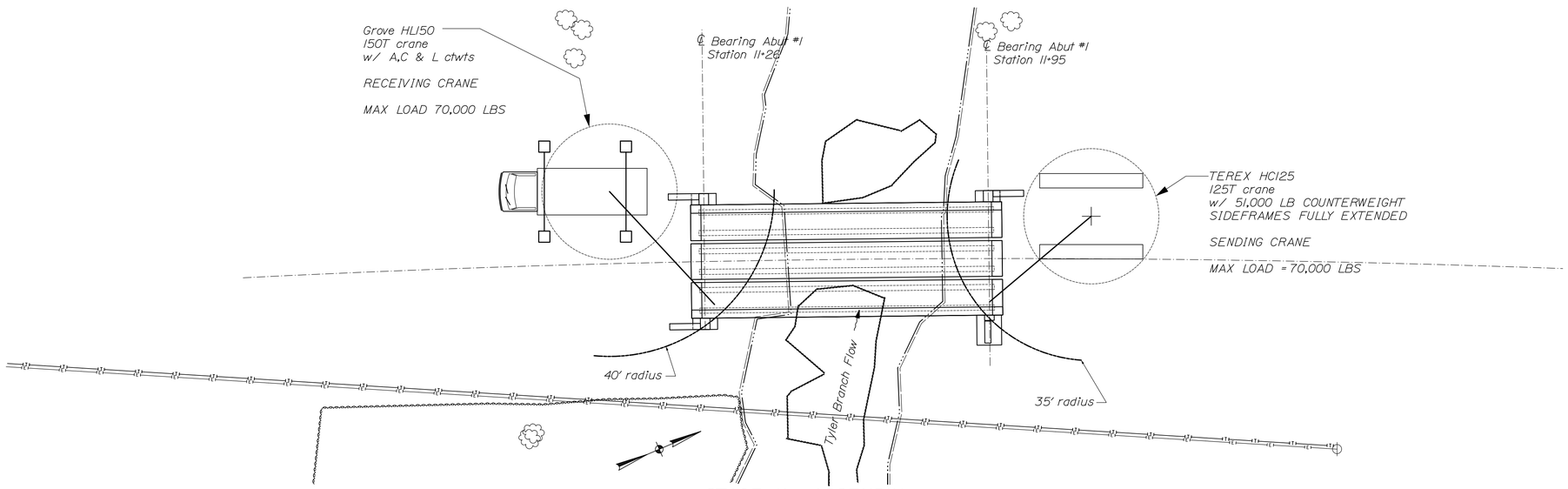

STAGE X - ASSEMBLY

47. REPEAT STEPS 40 THRU 46 WITH THE CENTER NEXT BEAM.
48. REPEAT STEPS 40 THRU 45 WITH THE EAST FASCIA
49. SET EAST FASCIA BEAM IMMEDIATELY ON TOP OF HARDWOOD BLOCKING ON TOP OF CENTER BEAM. HARDWOOD BLOCKING SHALL BE A MINIMUM OF 16" HIGH 36" WIDE AND 8'-0" LONG. THE WIDTH SHALL BE CENTERED ON CENERLINE OF BEARING AT EACH END OF THE CENTER NEXT BEAM.
50. REMOVE SLIDING BEAM ASSEMBLY AND CARRIAGE ASSEMBLY
51. RE-RIG EASTERLY FASCIA BEAM WITH EACH CRANE AND SLOWLY SWING INTO IT'S FINAL LAYOUT POSITION, SET EAST FASCIA BEAM ON IT'S BEARINGS AND VERIFY LAYOUT PRIOR TO CUTTING BEAM LOOSE
52. PLACE CONCRETE IN CLOSURE POURS AS REQUIRED BY CONTRACT DOCUMENTS
53. FINISH CURING CONCRETE IN CLOSURE POURS, BACKFILL TO THE BOTTOM OF THE APPROACH SLABS GRADE UNDER APPROACH SLABS AS REQUIRED
54. PLACE PRECAST CONCRETE APPROACH SLABS AND DRILL AND ANCHOR THEM INTO SEAT AS REQUIRED BY CONTRACT DOCUMENTS
55. PLACE CLOSURE POURS BETWEEN APPROACH SLAB SECTIONS CURE AS REQUIRED
56. INSTALL BRIDGE RAILING, APPLY MEMBRANE WATERPROOFING, PAVE AND INSTALL ASPHALTIC PLUG TYPE EXPANSION JOINT.
57. OPEN BRIDGE TO TRAFFIC

CALDERWOOD ENGINEERING, ETC.
STRUCTURAL ENGINEERING • DETAILING SERVICES
222 RIVER RD, RICHMOND, ME 04357 PH/FX (207)737-2007/(207) 737-2008

PREPARED FOR:
A.L. ST. ONGE CONTRACTOR, INC
VTAOT PROJ. NUMBER BRO-1448(40)
CEE 70-BR-14

STATE OF VERMONT
ERIC T. CALDERWOOD
NO. 8741
Structural
LICENSED
PROFESSIONAL ENGINEER

P.E. NUMBER
JUL 2014
DATE

	BY	DATE
DESIGN-DETAILED	ETC	7/14
CHECKED-REVIEWED		
REVISIONS 1		
REVISIONS 2		
REVISIONS 3		
REVISIONS 4		
FIELD CHANGES		

ENOSBURG-VT BOSTON POST RD
OVER TYLER BRANCH

SUPERSTRUCTURE ASSEMBLY PLAN

SHEET NUMBER
6

CALDERWOOD ENGINEERING
222 RIVER ROAD
RICHMOND, ME 04357
PH. (207) 737-2007 FAX (207) 737-2008

Date:7/16/2014
Username: Eric
Workgroup: Structures Division