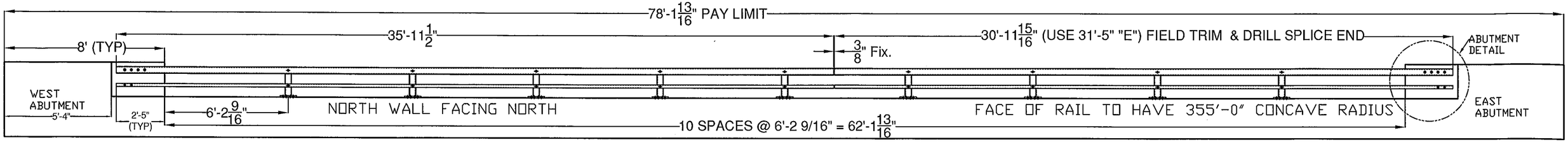

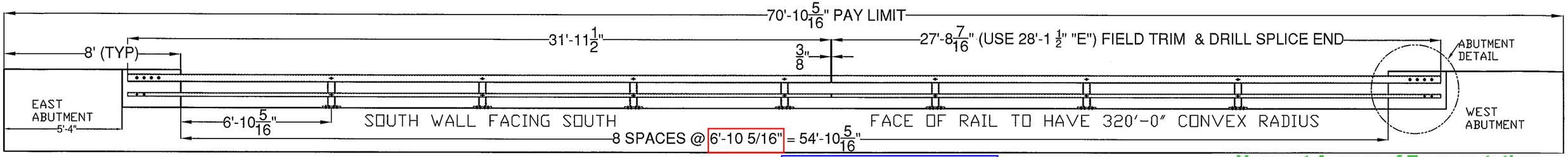

Max Spacing 6' - 8"

Vermont Agency of Transportation
RECEIVED
FRL-COLCHESTER - comments.pdf

CK'D BY CLB OK'D BY HIS

April 10, 2015

RESUBMIT YES Rejected

BY Carolyn Carlson DATE 4/22/2015

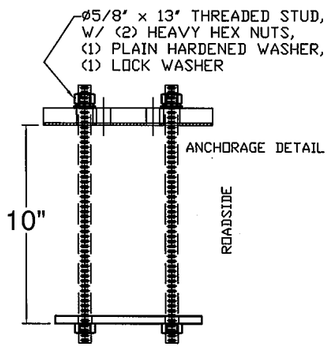

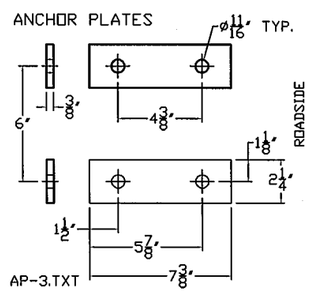

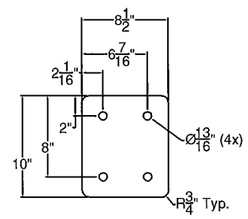

1/8" Elastomeric Pad

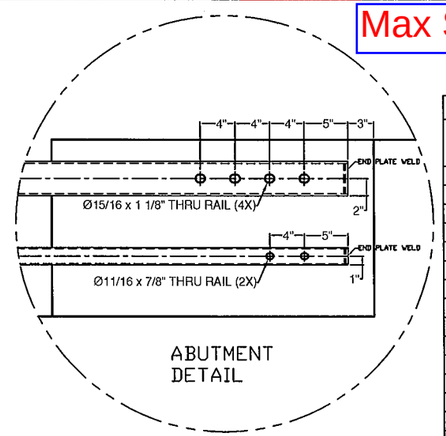

ABUTMENT DETAIL

BILL OF M				
ITEM #	QTY	PART #	DESCRIPTION	
1	16	0033.90017	TWO RAIL POST & BASE PLATE ASSEMBLY	
2	1	0033.900025	2" X 2" X 1/8" RAIL @ 35'-11 1/2" W/ 355'	
3	1	0033.900026	2" X 2" X 1/8" RAIL @ 31'-5" "E" W/ 355' C	
4	1	0033.900027	2" X 2" X 1/8" RAIL @ 31'-11 1/2" W/ 320' C	
5	1	0033.900028	2" X 2" X 1/8" RAIL @ 28'-1 1/2" "E" W/ 32	
6	1	0033.900029	4" X 3" X 1/4" RAIL @ 35'-11 1/2" W/ 355'	
7	1	0033.900030	2" X 2" X 1/8" RAIL @ 30'-5" "E" W/ 355' CONCAVE R. & END PLATES	A500 Gr. B
8	1	0033.900031	4" X 3" X 1/4" RAIL @ 31'-11 1/2" W/ 320' CONVEX R. & END PLATES	A500 Gr. B
9	1	0033.900032	4" X 3" X 1/4" RAIL @ 28'-1 1/2" "E" W/ 320' CONVEX R. & END PLATES	A500 Gr. B
10	2	0033.90069	1-1/2" X 1-1/2" FIX. SPL BAR @ 2' 4"	A572 Gr. 50
11	2	0033.90071	2-1/4" X 3-1/4" FIX. SPL. BAR @ 2' 4"	A572 Gr. 50
12	32	0033.00295	3/8" X 2 1/4" X 7 3/8" ANCHOR PLATES	A36
13	66*	0042.05813	Ø 5/8" X 13" ANCHOR STUDS	A449
14	130*	0080.15901	Ø 5/8" HEAVY HEX NUTS	A563
15	64	0080.15911	Ø 5/8" FLAT WASHERS	F436
16	64	0080.15920	Ø 5/8" LOCK WASHERS	ASME D18.2
17	16	0080.05565	Ø 5/8" X 7 1/2" SLOTTED, ROUND HEAD BOLT, NUT, F.W., & L.W.	A449, A563 DH, F436, & ASME D18.21.1
18	16	0080.06410	Ø 3/4" X 8 1/2" SLOTTED, ROUND HEAD BOLT, NUT, F.W., & L.W.	A449, A563 DH, F436, & ASME D18.21.1
19	8	0080.05275	Ø 5/8" X 3" HEX BOLT, NUT, F.W., & L.W.	A325, A563 DH, F436, & ASME D18.21.1
20	8	0080.07330	Ø 7/8" X 5 1/2" HEX BOLT, NUT, F.W., & L.W.	A325, A563 DH, F436, & ASME D18.21.1
21	8	0080.05760	Ø 5/8" X 13" SLOTTED, ROUND HEAD BOLT, NUT, F.W., & L.W.	A449, A563 DH, F436, & ASME D18.21.1
22	16	0080.07710	Ø 7/8" X 14" SLOTTED, ROUND HEAD BOLT, NUT, F.W., & L.W.	A449, A563 DH, F436, & ASME D18.21.1
23	16	0033.00053	1/8" ELASTOMERIC PAD	D2240
24	5		DELINEATORS (SUPPLIED BY F.R. LaFAYETTE)	ALUMINUM

*-2 EXTRA FOR VOAT TESTING

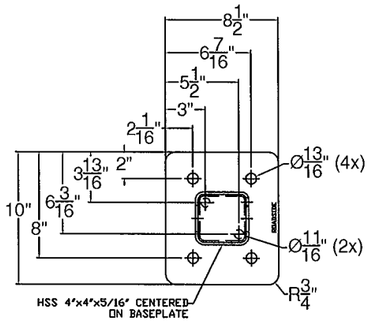

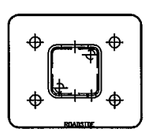

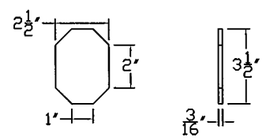

Welded to 4"x3" Tube

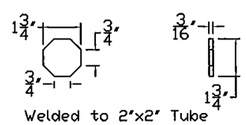

Welded to 2"x2" Tube

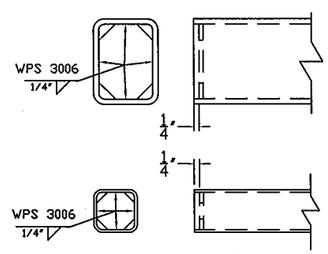

END OF RAIL DETAIL

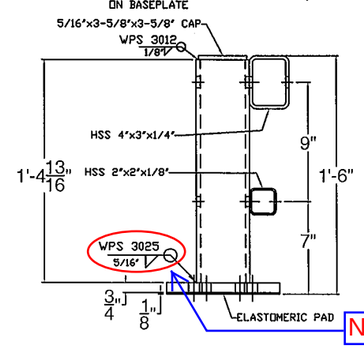

Need WPS 3025

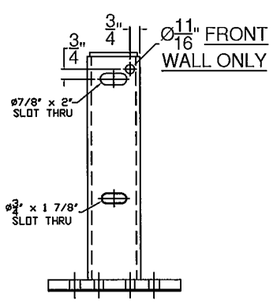

NOTES:

1. ALL WORK AND MATERIALS SHALL CONFORM TO SECTION 525.
2. PRIOR TO GALVANIZING THE ASSEMBLED POST, GRIND ALL EDGES TO A MINIMUM RADIUS OF 1/16".
3. ALL POSTS SHALL BE SET NORMAL TO GRADE.
4. SECTIONS OF RAIL TUBE SHALL BE ATTACHED TO A MINIMUM OF TWO BRIDGE POSTS AND PREFERABLY TO AT LEAST 4 POSTS.
5. HOLES IN RAILS FOR TUBE ATTACHMENT, WILL BE SHOP-DRILLED.
6. BOLTS SHALL BE TORQUED SNUG TIGHT (APPROXIMATELY 100 FT-LB).
7. RAIL TUBES SHALL BE ATTACHED USING FULL DIAMETER BODY ASTM A449 (TYPE I) ROUND HEAD BOLTS INSERTED THROUGH THE FACE OF THE TUBE.
8. SEE STANDARD DRAWING G-I FOR DETAILS OF DELINEATORS. A DELINEATOR SHALL BE INSTALLED AT 30 FOOT SPACING OR THE NEAREST POST. WHITE IS TO BE INSTALLED ON THE DRIVER'S RIGHT. FOR ONE WAY BRIDGES, YELLOW IS TO BE INSTALLED ON THE DRIVER'S LEFT. PAYMENT FOR DELINEATORS SHALL BE INCIDENTAL TO OTHER ITEMS.
9. AESTHETIC TREATMENT TYPE SHALL BE APPLIED AS SPECIFIED IN THE CONTRACT PLANS. IF NONE IS SPECIFIED IT SHALL NOT BE USED. AESTHETIC TREATMENT DETAILED ON THIS SHEET MAY ALSO BE APPLIED ON THE FASCIA SIDE OF THE RAIL, IF SPECIFIED IN THE CONTRACT PLANS.
10. BRIDGE RAILING SHALL HAVE A RUBBED FINISH IN ACCORDANCE WITH SECTION 501.
11. THIS RAILING MEETS THE REQUIREMENTS FOR A NCHRP REPORT 350 TL-4 SERVICE LEVEL.
12. HOLES FOR MOUNTING DELINEATORS TO BE FIELD DRILLED. HOLES SHALL BE COATED WITH AN APPROVED ZINC-RICH PAINT PRIOR TO INSTALLATION.
13. ALL STEEL COMPONENTS OF BRIDGE RAILING AND BOX BEAM GUARDRAIL, INCLUDING THE RAIL CONNECTION TO THE BRIDGE RAIL SHALL BE GALVANIZED IN ACCORDANCE WITH THE STANDARD SPECIFICATIONS.

HARDWARE NOTES	
ITEM #	FUNCTION
17	BOLT BOTTOM RAIL TO POST (ITEM #1)
18	BOLT TOP RAIL TO POST (ITEM #1)
19	BOLT BOTTOM SPLICE BARS (ITEM #6) TO BOTTOM RAIL
20	BOLT TOP SPLICE BARS (ITEM #7) TO TOP RAIL
21	BOLT BOTTOM RAIL TO END ABUTMENT
22	BOLT TOP RAIL TO END ABUTMENT

ITEM #: 525.45

SHEET 1 OF 6

STRUCTURAL STEEL TO COMPLY W/ ASTM A6

TOLERANCE UNLESS OTHERWISE NOTED:
FRACTIONS = ± 1/16"
ANGLES = ± 1/2°
DIAMETERS = ± 1/32"

BRIDGE RAIL DETAILS SHEET

T.H. 27 (URBAN COLLECTOR), BRIDGE # 12
TOWN OF COLCHESTER, CHITTENDEN COUNTY

REV	NO.	DATE	DESCRIPTION	BY	REV	NO.	DATE	DESCRIPTION	BY

ELDERLEE, INC.
OAKS CORNERS, NEW YORK 14518
E-Mail: dlong@elderlee.com / epeek@elderlee.com
Tel: 315-789-6670 Fax: 315-789-6615

AISC CERTIFIED FABRICATOR

DRAWN	E.P.	4/9/15
CHECKED	D.L.	4/9/15
APPROVED	.	.
SCALE	SCHEMATIC	
DRAWING NO.	FR L - COLCHESTER	

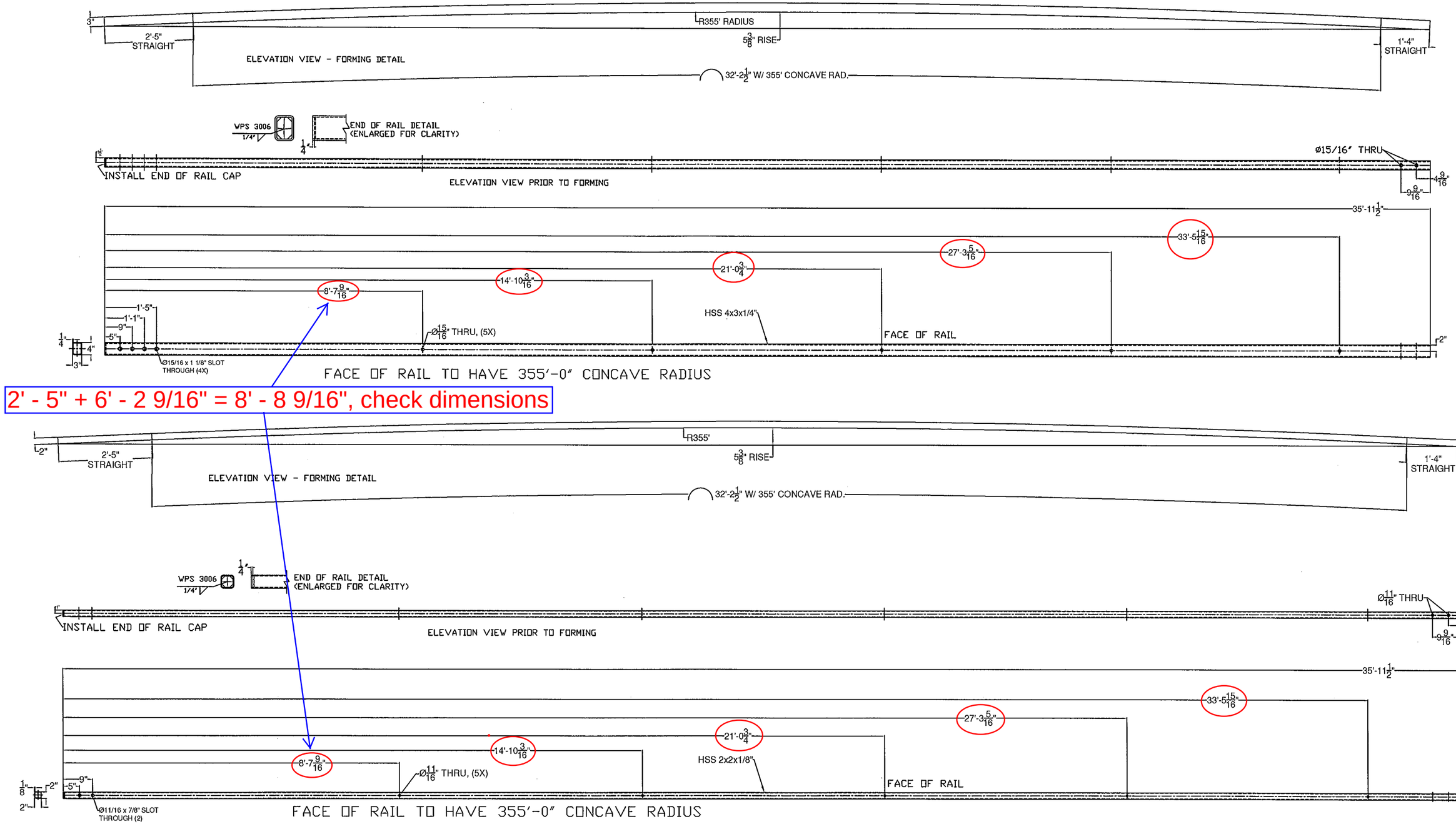

Vermont Agency of Transportation

RECEIVED

FRL-COLCHESTER - comments.pdf

CK'D BY CLB **OK'D BY** HIS

April 10, 2015

RESUBMIT YES **Rejected**

BY Carolyn Carlson **DATE** 4/22/2015

ITEM #: 525.45

SHEET 2 OF 6

STRUCTURAL STEEL TO COMPLY W/ ASTM A6

TOLERANCE UNLESS OTHERWISE NOTED:
FRACTIONS = ± 1/16"
ANGLES = ± 1/2°
DIAMETERS = ± 1/32"

BRIDGE RAIL DETAILS SHEET

T.H. 27 (URBAN COLLECTOR), BRIDGE # 12
TOWN OF COLCHESTER, CHITTENDEN COUNTY

REV	NO.	DATE	DESCRIPTION	BY	REV	NO.	DATE	DESCRIPTION	BY

ELDERLEE, INC.
OAKS CORNERS, NEW YORK 14518
E-Mail: dlong@elderlee.com / epeek@elderlee.com
Tel: 315-789-6670 Fax: 315-789-6615

AISC CERTIFIED FABRICATOR

DRAWN	E.P.	4/9/15
CHECKED	D.L.	4/9/15
APPROVED	.	.
SCALE	SCHEMATIC	
DRAWING NO.	FR L - COLCHESTER	

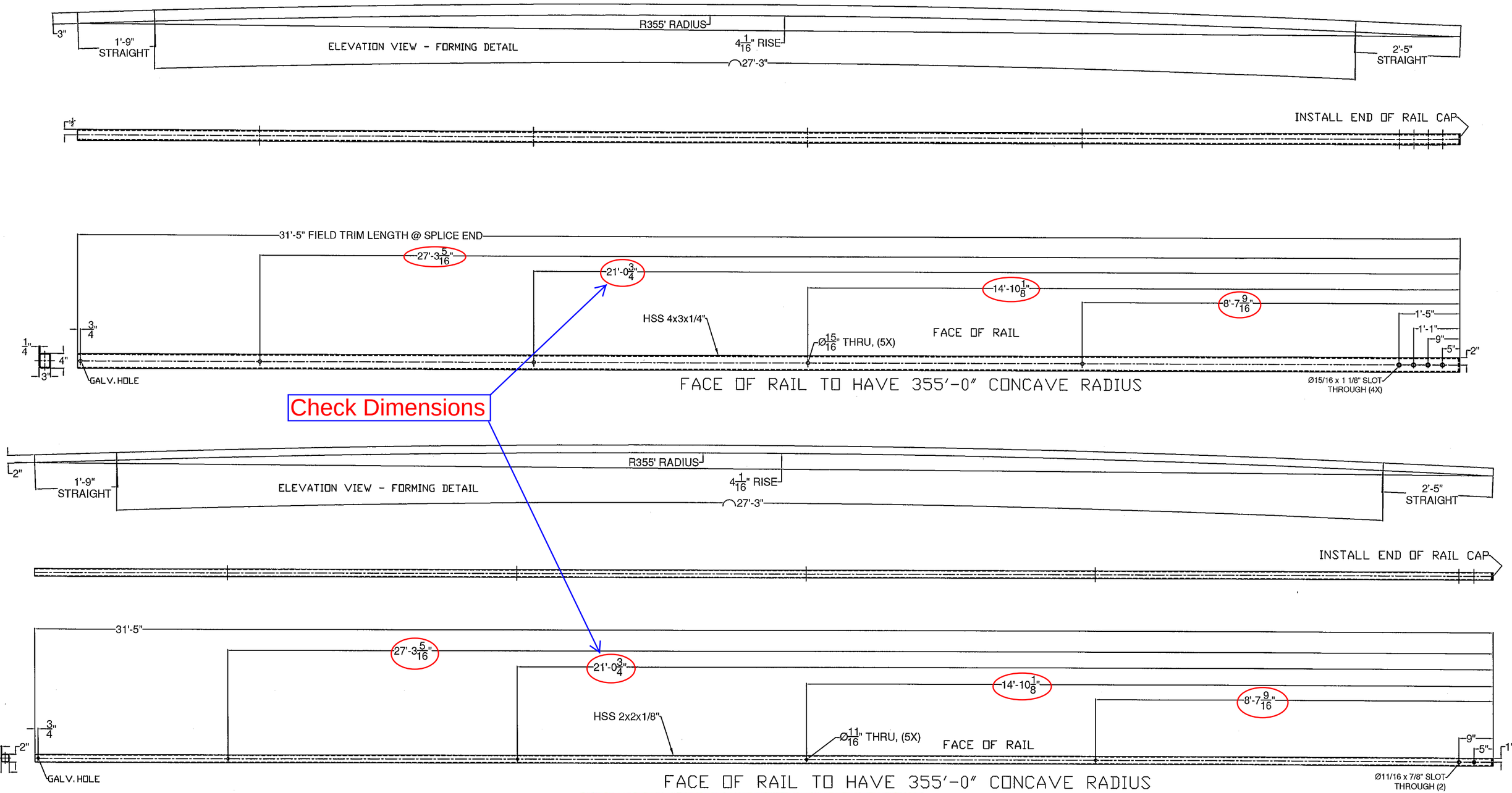

Check Dimensions

Vermont Agency of Transportation

RECEIVED

FRL-COLCHESTER - comments.pdf

CK'D BY CLB OK'D BY HIS

April 10, 2015

RESUBMIT YES Rejected

BY Carolyn Carlson DATE 4/22/2015

ITEM #: 525.45

SHEET 3 OF 6

STRUCTURAL STEEL TO COMPLY W/ ASTM A6

TOLERANCE UNLESS OTHERWISE NOTED:
FRACTIONS = ± 1/16"
ANGLES = ± 1/2°
DIAMETERS = ± 1/32"

BRIDGE RAIL DETAILS SHEET

T.H. 27 (URBAN COLLECTOR), BRIDGE # 12
TOWN OF COLCHESTER, CHITTENDEN COUNTY

REV	NO.	DATE	DESCRIPTION	BY	REV	NO.	DATE	DESCRIPTION	BY

ELDERLEE, INC.
OAKS CORNERS, NEW YORK 14518
E-Mail: dlong@elderlee.com / epeek@elderlee.com
Tel: 315-789-6670 Fax: 315-789-6615

AISC CERTIFIED FABRICATOR

DRAWN	E.P.	4/9/15
CHECKED	D.L.	4/9/15
APPROVED	.	.
SCALE	SCHEMATIC	
DRAWING NO.	FR L - COLCHESTER	

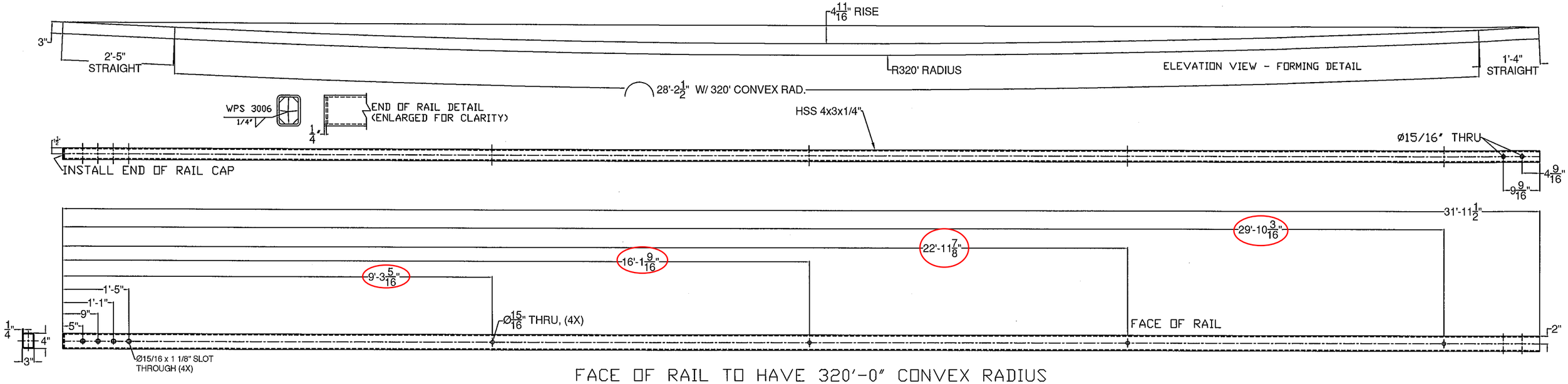

FACE OF RAIL TO HAVE 320'-0" CONVEX RADIUS

Spacing is greater than 6' - 8"

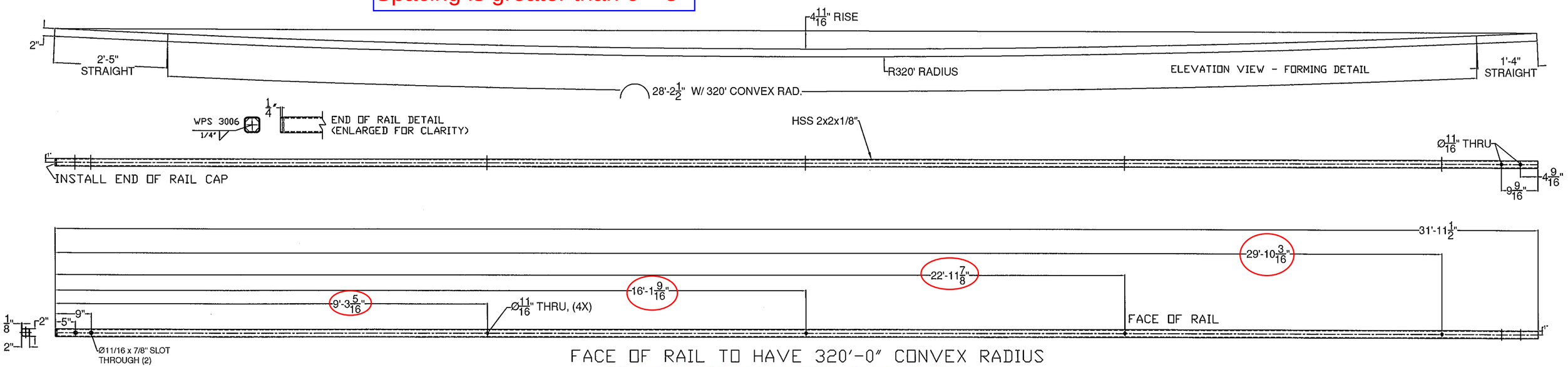

FACE OF RAIL TO HAVE 320'-0" CONVEX RADIUS

Vermont Agency of Transportation

RECEIVED

FRL-COLCHESTER - comments.pdf

CK'D BY CLB OK'D BY HIS

April 10, 2015

RESUBMIT YES Rejected

BY Carolyn Carlson DATE 4/22/2015

ITEM #: 525.45

SHEET 4 OF 6

STRUCTURAL STEEL TO COMPLY W/ ASTM A6

TOLERANCE UNLESS OTHERWISE NOTED:
FRACTIONS = ± 1/16"
ANGLES = ± 1/2°
DIAMETERS = ± 1/32"

BRIDGE RAIL DETAILS SHEET

T.H. 27 (URBAN COLLECTOR), BRIDGE # 12
TOWN OF COLCHESTER, CHITTENDEN COUNTY

REV	NO.	DATE	DESCRIPTION	BY	REV	NO.	DATE	DESCRIPTION	BY

ELDERLEE, INC.
OAKS CORNERS, NEW YORK 14518
E-Mail: dlong@elderlee.com / epeek@elderlee.com
Tel: 315-789-6670 Fax: 315-789-6615

AISC CERTIFIED FABRICATOR

DRAWN	E.P.	4/9/15
CHECKED	D.L.	4/9/15
APPROVED	.	.
SCALE	SCHEMATIC	
DRAWING NO.	FR L - COLCHESTER	

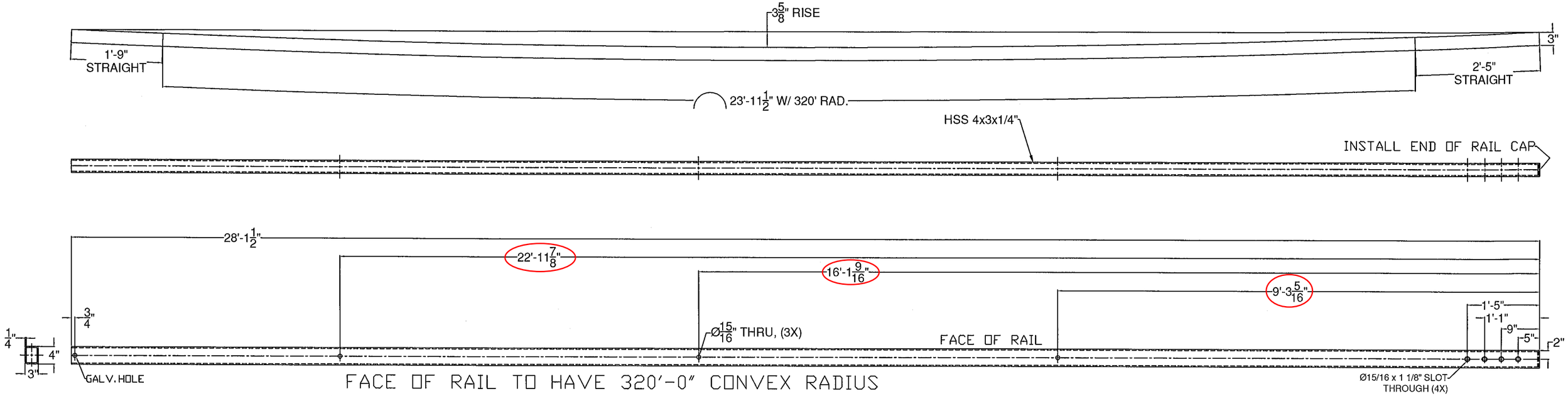

Spacing greater than 6' - 8", check dimensions

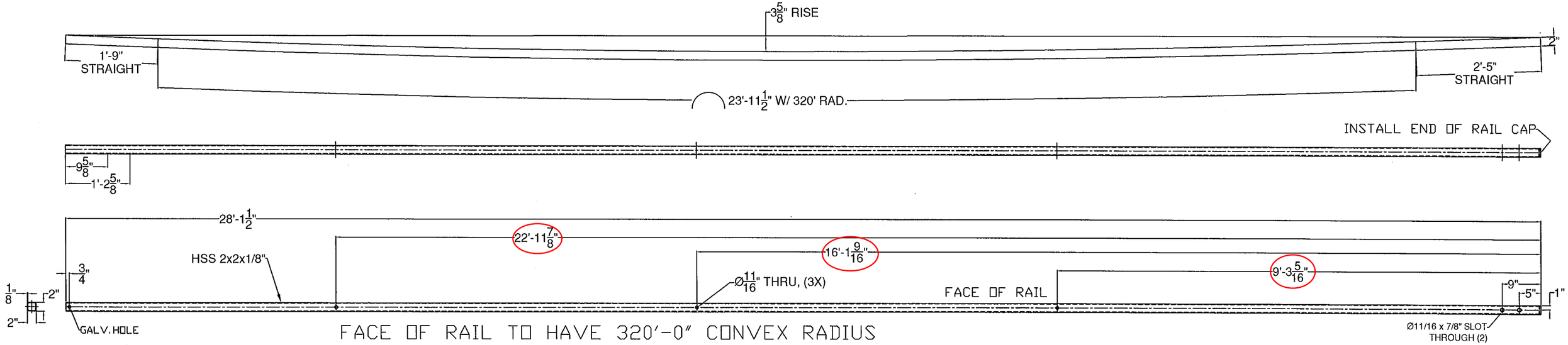

Vermont Agency of Transportation

RECEIVED

FRL-COLCHESTER - comments.pdf

CK'D BY CLB OK'D BY HIS

April 10, 2015

RESUBMIT YES Rejected

BY Carolyn Carlson DATE 4/22/2015

ITEM #: 525.45

SHEET 5 OF 6

STRUCTURAL STEEL TO COMPLY W/ ASTM A6

TOLERANCE UNLESS OTHERWISE NOTED:
FRACTIONS = ± 1/16"
ANGLES = ± 1/2°
DIAMETERS = ± 1/32"

BRIDGE RAIL DETAILS SHEET

T.H. 27 (URBAN COLLECTOR), BRIDGE # 12
TOWN OF COLCHESTER, CHITTENDEN COUNTY

REV	NO.	DATE	DESCRIPTION	BY	REV	NO.	DATE	DESCRIPTION	BY

ELDERLEE, INC.
OAKS CORNERS, NEW YORK 14518
E-Mail: dlong@elderlee.com / epeek@elderlee.com
Tel: 315-789-6670 Fax: 315-789-6615

CERTIFIED FABRICATOR

DRAWN	E.P.	4/9/15
CHECKED	D.L.	4/9/15
APPROVED		
SCALE	SCHEMATIC	
DRAWING NO.	FR L - COLCHESTER	

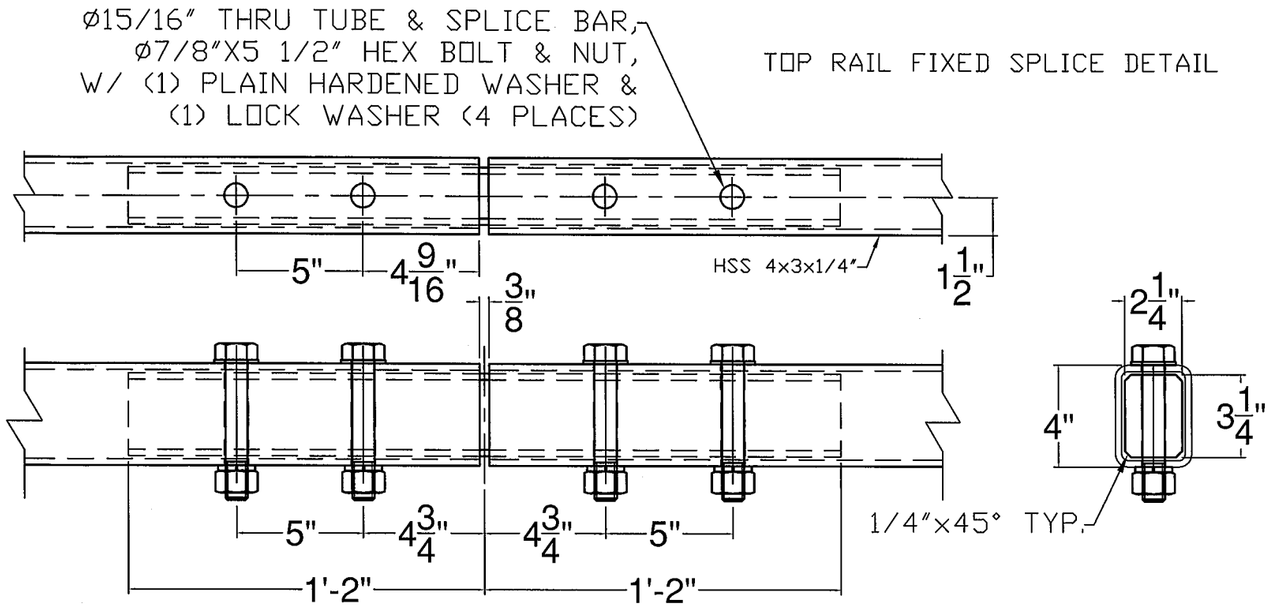

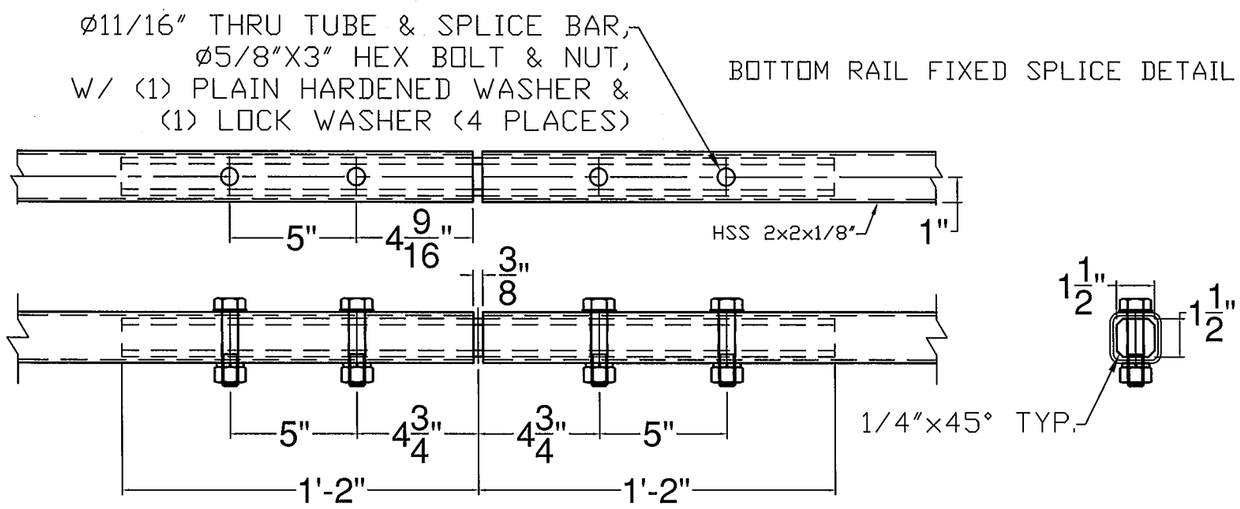

Vermont Agency of Transportation

RECEIVED

FRL-COLCHESTER - comments.pdf

CK'D BY CLB OK'D BY HIS

April 10, 2015

RESUBMIT YES Rejected

BY Carolyn Carlson DATE 4/22/2015

ITEM #: 525.45

SHEET 6 OF 6

STRUCTURAL STEEL TO COMPLY W/ ASTM A6

TOLERANCE UNLESS OTHERWISE NOTED:
FRACTIONS = ± 1/16"
ANGLES = ± 1/2°
DIAMETERS = ± 1/32"

BRIDGE RAIL DETAILS SHEET

T.H. 27 (URBAN COLLECTOR), BRIDGE # 12
TOWN OF COLCHESTER, CHITTENDEN COUNTY

REV	NO.	DATE	DESCRIPTION	BY	REV	NO.	DATE	DESCRIPTION	BY

ELDERLEE, INC.
OAKS CORNERS, NEW YORK 14518
E-Mail: dlong@elderlee.com / epeek@elderlee.com
Tel: 315-789-6670 Fax: 315-789-6615

AISC CERTIFIED FABRICATOR

DRAWN	E.P.	4/9/15
CHECKED	D.L.	4/9/15
APPROVED	.	.
SCALE	SCHEMATIC	
DRAWING NO.	FR L - COLCHESTER	

WELDING PROCEDURE SPECIFICATION

Material Specification	A36 TO A500
Welding Process	FCAW
Manual or Machine	SEMAUTOMATIC
Position of Welding	FLAT / HORIZONTAL
Filler Metal Specification	A5.20 - 95
Filler Metal Classification	E81T1-Ni1C-JH4
Flux	N/A
Shielding Gas	CO 2 Dew Point -40DEG F Flow Rate 50CFH
Single or Multiple Pass	SINGLE
Single or Multiple Arc	SINGLE
Welding Current	DC
Polarity	REVERSE ELECTRODE POSITIVE
Welding Progression	STRINGER
Root Treatment	PER D1.5
Preheat and Interpass Temperature	PER D1.5
Postheat Temperature	NONE
Heat Input	Min _____ Max _____

WELDING PROCEDURE

Pass no.	Electrode size	Welding Current Amperes	Welding Current Volts	Travel speed	Joint detail
1	1/16	300	26	14	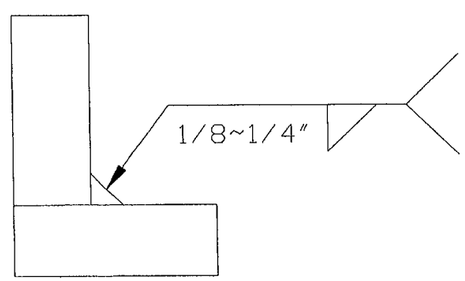
Variable	LIMITS	270 TO 330	24 TO 28	12.6 TO 15.4	

This procedure may vary due to fabrication sequence, fit-up, pass size, etc., within the limitation of variables given in Section 5.

Procedure No. 3006

Revision No. _____

Contractor Elderlee, Inc.

Authorized By RANDY SCOTT

Date 8/4/2014

Form III-2

Vermont Agency of Transportation

RECEIVED

FRL-COLCHESTER - comments.pdf

CK'D BY JWC OK'D BY HIS

April 10, 2015

RESUBMIT NO Approved

BY Carolyn Carlson DATE 4/24/2015

WELDING PROCEDURE SPECIFICATION

PQR ELDERLEE #3

Material Specification	ASTM-A500-A53-GRADE B TO A36
Welding Process	FCAW-G
Manual or Machine	SEMAUTOMATIC
Position of Welding	1G
Filler Metal Specification	A5.29
Filler Metal Classification	E81T1-Ni1C-JH4
Flux	N/A
Shielding Gas	CO 2 Dew Point -40DEG F FLOW RATE 50 CFH
Single or Multiple Pass	SINGLE
Single or Multiple Arc	SINGLE
Welding Current	DC
Polarity	REVERSE ELECTRODE POSITIVE
Welding Progression	STRINGER
Root Treatment	PER D1.5
Preheat and Interpass Temperature	PER. D1.5
Postheat Temperature	NONE
Heat Input	Min Max

WELDING PROCEDURE

Pass no.	Electrode size	Welding Current Amperes	Welding Current Volts	Travel speed	Joint detail
1	1/16	310	25	11	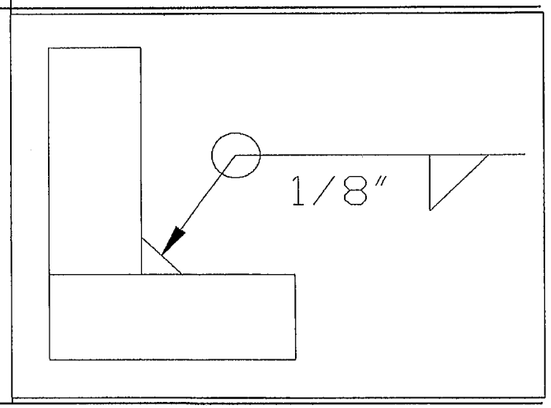
Variable	LIMITS	341 TO 269	27 TO 23	12 TO 10	

This procedure may vary due to fabrication sequence, fit-up, pass size, etc., within the limitation of variables given in Section 5.

Procedure No.	3012	Contractor	Elderlee, Inc.
Revision No.		Authorized By	RANDY SCOTT
		Date	3/20/2014

Vermont Agency of Transportation

RECEIVED

FRL-COLCHESTER - comments.pdf

CK'D BY JWC OK'D BY HIS

April 10, 2015

RESUBMIT NO Approved

BY Carolyn Carlson DATE 4/24/2015