| REVISIONS | | | | | |
|---|---|---|---|---|---|
| ZONE | REV | DESCRIPTION | REVISED BY | DATE | APPROVED |
| | | | | | |
| | | | | | |

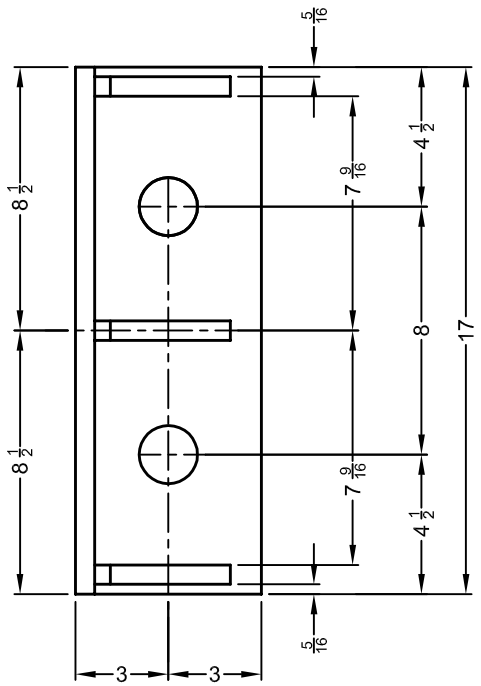


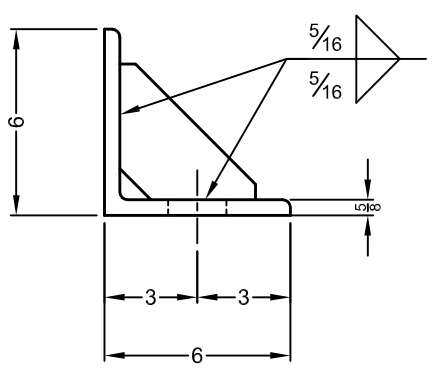


<6 x 6 x 5/8

## RETAINER ANGLE DETAIL

QTY. REQ'D = 8

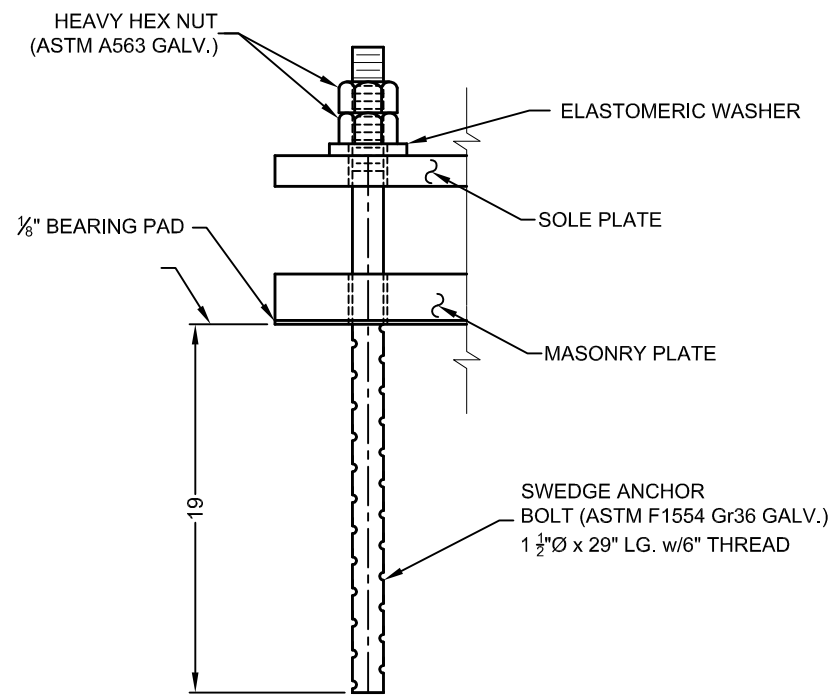


## FIXED BEARING ANCHOR BOLT DETAIL

QTY. REQ'D = 16 ASSY.

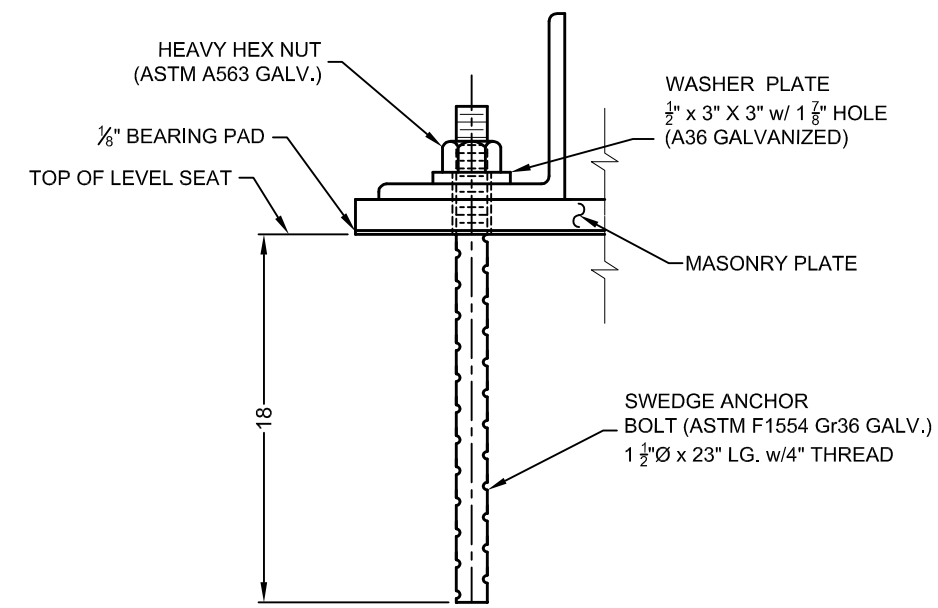


## EXPANSION BEARING ANCHOR BOLT DETAIL

QTY. REQ'D = 16 ASSY.

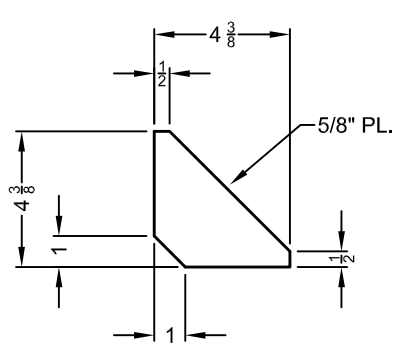


## STIFFENER DETAIL

QTY. REQ'D = 24
3 PER ANGLE

SEE SHEET 1 OF 4 FOR NOTES

| Inspection Block |
|---|
| Initial Dim. Check<br>Sign:_____Date:_____ |
| In Process Dim. Chk.<br>Sign:_____Date:_____ |
| 100% Visual Weld Insp.<br>Sign:_____Date:_____ |
| Paint Insp.(see form)<br>Sign:_____Date:_____ |
| Final Inspection<br>Sign:_____Date:_____ |

VERMONT DOT
COLCHESTER

PROJECT NO. : STP 5600 (12)

CONTRACT NO. :

RETAINER ANGLE & ANCHOR BOLT DETAILS

**AMSCOT**
STRUCTURAL PRODUCTS CORP.

| SCALE: N.T.S. | APPRV'D: | DRAWN BY: E.J.G. |
|---|---|---|
| DATE: 3/20/15 | BF | REVISION: 0 |

FOR: A.L. ST. ONGE

| DWG NO: ASO15B4RO | | SHEET 4 OF 4 |
|---|---|---|