REVISIONS					
ZONE	REV	DESCRIPTION	REVISED BY	DATE	APPROVED

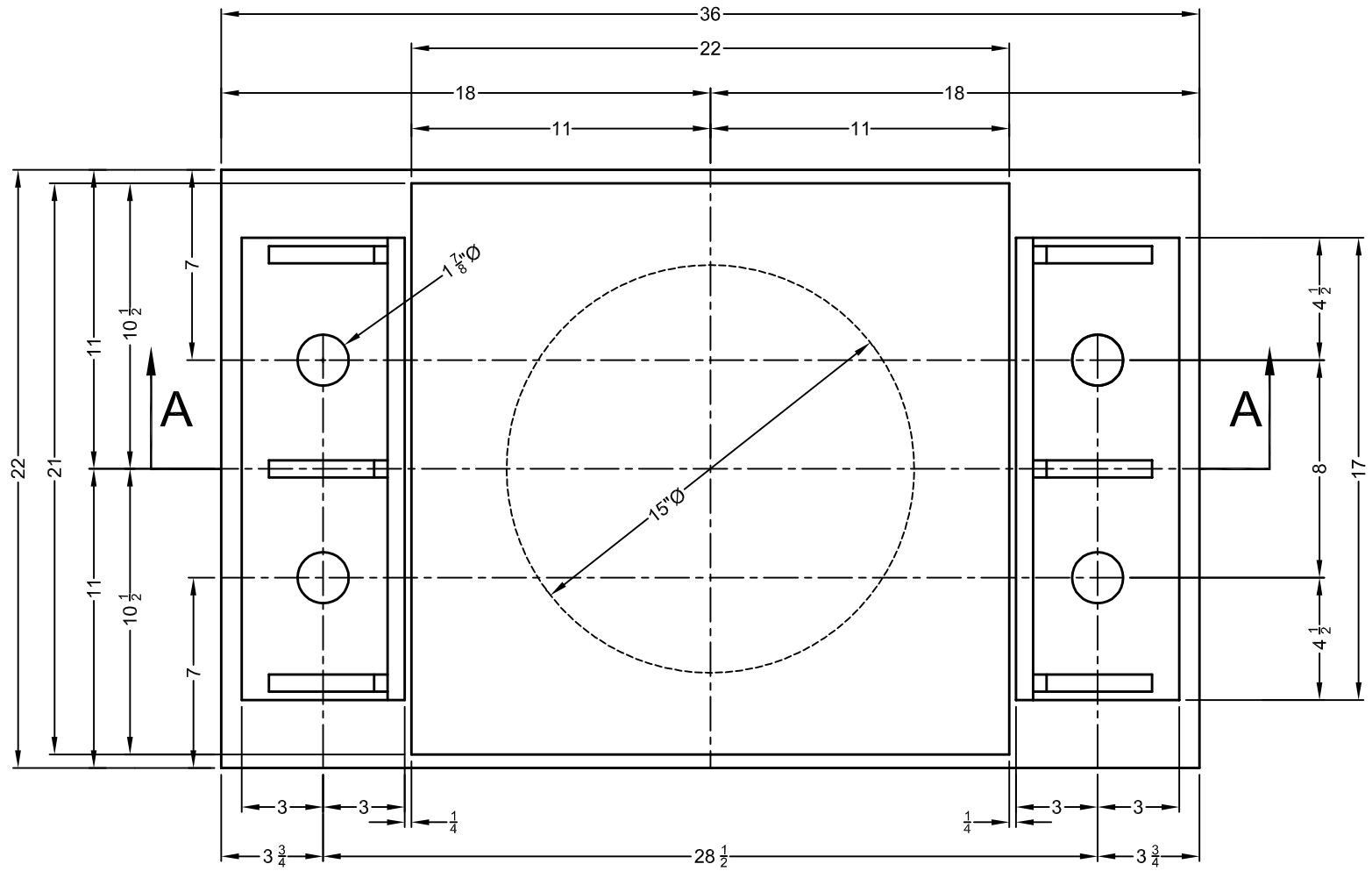

PLAN VIEW

QTY. REQ'D. = 4 ASSY.
MARKS G1,G2,G3 & G4 @ BEGIN BRIDGE

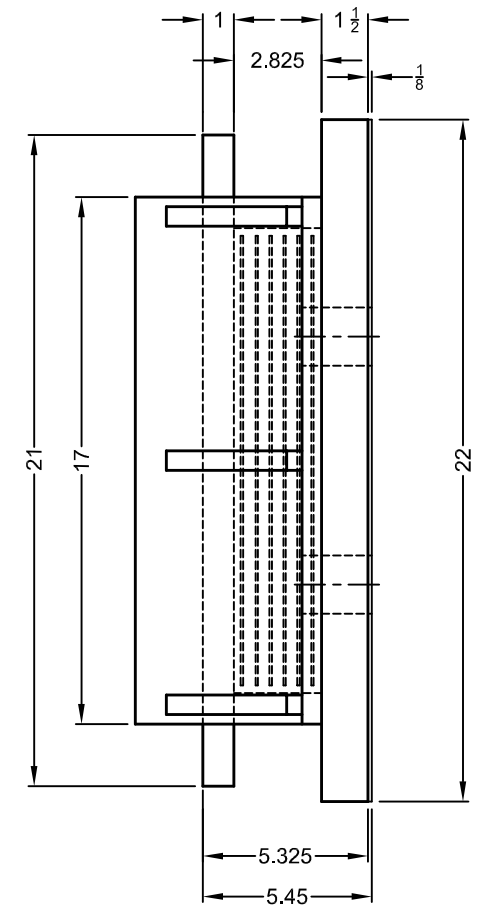

SIDE VIEW

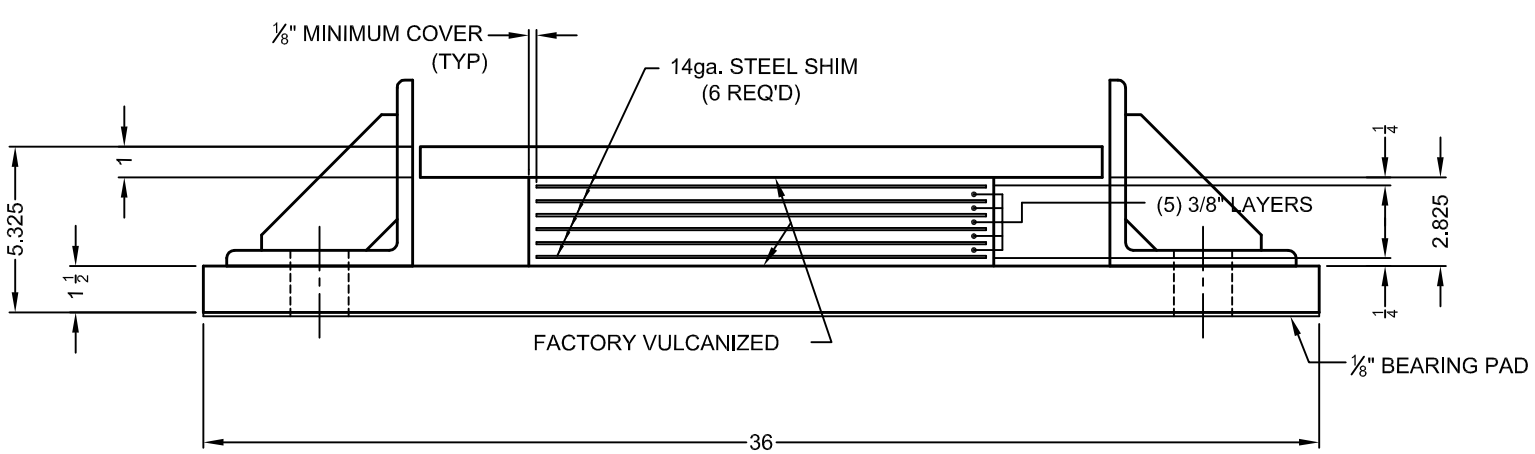

SECTION A-A

Inspection Block
Initial Dim. Check Sign:_____Date:_____
In Process Dim. Chk. Sign:_____Date:_____
100% Visual Weld Insp. Sign:_____Date:_____
Paint Insp.(see form) Sign:_____Date:_____
Final Inspection Sign:_____Date:_____

VERMONT DOT
COLCHESTER

PROJECT NO. : STP 5600 (12)

CONTRACT NO. :

ELASTOMERIC EXPANSION BEARING DETAILS

AMSCOT
STRUCTURAL PRODUCTS CORP.

SCALE: N.T.S.	APPRV'D:	DRAWN BY: E.J.G.
DATE: 3/20/15	BF	REVISION: 0

FOR: A.L. ST. ONGE

DWG NO: ASO15B3RO | SHEET 3 OF 4

SEE SHEET 1 OF 4 FOR NOTES
SEE SHEET 4 OF 4 FOR RETAINER ANGLE & ANCHOR BOLT DETAILS