TOWN OF WEST RUTLAND

ROUTE 4 WATER AND SEWER EXTENSIONS

CENTER RUTLAND, VERMONT

SPRING 2015

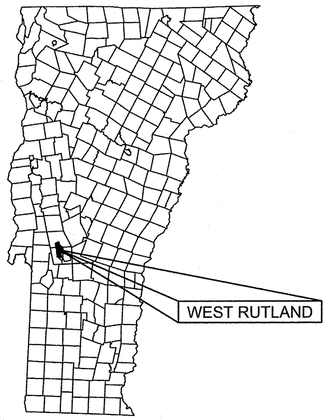

STATE OF VERMONT
CARL CRAWFORD
No. 7014
CIVIL
LICENSED
PROFESSIONAL ENGINEER

PRINCIPAL ENGINEER

PERMITTING SET

OTTER CREEK
ENGINEERING

404 East Main Street
P.O. Box 712
East Middlebury, VT 05740
Telephone: 802 382-8522
Fax: 802 382-8640
~
110 Merchants Row
4th Floor, Suite 15
Rutland, VT 05701
Telephone: 802 747-3080
Fax: 802 747-4820
~
E-mail: info@ottercrk.com

GENERAL NOTES

1. THESE PLANS ARE BASED ON PLANNIMETRIC MAPPING BY MINUTEMAN MAPPING PHOTOGRAMMETRIC SERVICES, BEDFORD, NH, PREPARED FROM PHOTOGRAPHY DATED 11/20/13, MAP COMPILATION DATED 4/2/14.

2. IN PREPARATION OF THESE PLANS, DATA FROM THE FOLLOWING SOURCES WAS INCORPORATED:

   A. WATER MAIN LOCATION SHOWN ON PLEASANT STREET IS BASED ON PLANS TITLED "TOWN OF WEST RUTLAND, WATER SYSTEM IMPROVEMENTS, CONTRACT NO. 2, WEST RUTLAND, VERMONT", PREPARED BY OTTER CREEK ENGINEERING, INC., EAST MIDDLEBURY, VERMONT, DATED 10/25/05, RECORD DRAWING.

   B. PLAN TITLED "TOWN OF RUTLAND FIRE DISTRICT #1, FORCE MAIN PLAN AND PROFILE, PUMP STATION TO STA. 14+91, CENTER RUTLAND, VERMONT", RECORD DRAWING, PREPARED BY DUFRESNE-HENRY, INC., NORTH SPRINGFIELD, VERMONT, DATED APRIL, 1989, REVISED 5-11-87.

   C. RIGHT-OF-WAY AND CENTERLINE STATIONING IS BASED ON VTRANS DRAWINGS TITLED "WEST RUTLAND-RUTLAND PROJECT NO. STATE 65L"

3. ELEVATION IS BASED ON NAVD 88 FEET.

4. COORDINATE SYSTEM IS BASED ON NAD83 VT FEET.

5. FOR CLARITY, TEXT DENOTING EXISTING ITEMS IS SHOWN IN LOWER CASE, AND TEXT DENOTING PROPOSED ITEMS IS UPPERCASE AND BOLD.

6. REFER TO LEGEND LOCATED ON THIS SHEET FOR SYMBOL DESIGNATIONS.

7. ALL UNDERGROUND UTILITIES ARE SHOWN AS APPROXIMATE LOCATIONS.

8. THIS IS NOT A BOUNDARY SURVEY.

9. CONTRACT DOCUMENTS AND TECHNICAL SPECIFICATIONS ACCOMPANY THESE PLANS AND ARE ESSENTIAL FOR CONSTRUCTION OF THIS PROJECT.

LEGEND

- boundary line/r.o.w.
- road/parking (w/ surface label)
- drive (w/ surface label)
- tree line/hedge row
- 1 foot contour
- 100 — 5 foot contour — 100
- area of depression
- stone wall
- stream/river
- fence
- guardrail
- retaining wall
- railroad tracks
- e — underground electric
- o/h — overhead utility
- t — underground telephone
- dl — ditch line/drainage
- sd — storm drain
- ud — underdrain
- w — water main
- s — sanitary sewer
- fm — sewer force main
- signs
- light pole
- utility pole
- guy
- gate valve
- cs — curb stop
- hydrant
- iron pipe found
- catch basin
- sewer manhole
- deciduous tree
- coniferous tree
- shrub, bush
- stump
- 1 — traverse station
- TBM 1 — temporary bench mark
- WATER MAIN
- WATER SERVICE
- HYDRANT ASSEMBLY
- YARD HYDRANT
- GATE VALVE
- REDUCER
- CS — CURB STOP
- SANITARY SEWER
- SEWER MANHOLE
- FM — SEWER FORCEMAIN
- UTILITY EASEMENT
- SLEEVE FOR SERVICE CROSSING

NOTE:
FOR CLARITY, TEXT DENOTING EXISTING ITEMS IS SHOWN IN LOWER CASE, AND TEXT DENOTING PROPOSED ITEMS IS UPPERCASE AND BOLD.

ABBREVIATIONS

CI	– CAST IRON	IPF	– IRON PIPE/PIN FOUND
CB	– CATCH BASIN	MH	– MANHOLE
CL	– CLASS	NC	– NORMALLY CLOSED
CMP	– CORRUGATED METAL PIPE	NFL	– NOT FIELD LOCATED
CS	– CURB STOP	NLTD	– NO LEDGE TO DEPTH
DI	– DUCTILE IRON	NO	– NORMALLY OPEN
FM	– FORCE MAIN	NTS	– NOT TO SCALE
GPM	– GALLON PER MINUTE	ROW	– RIGHT OF WAY
GSP	– GALVANIZED SERVICE PIPE	S	– SANITARY SEWER
GV	– GATE VALVE	SD	– STORM DRAIN
GND	– GROUND	SMH	– SEWER MANHOLE
HDPE	– HIGH DENSITY POLYETHYLENE	TBM	– TEMPORARY BENCH MARK
HYD	– HYDRANT	TBA	– TO BE ABANDONED
INV	– INVERT	TBR	– TO BE REMOVED
IP	– IRON PIPE/PIN	TMH	– TELEPHONE MANHOLE
		WMH	– WATER MANHOLE
		U.N.O.	– UNLESS NOTED OTHERWISE

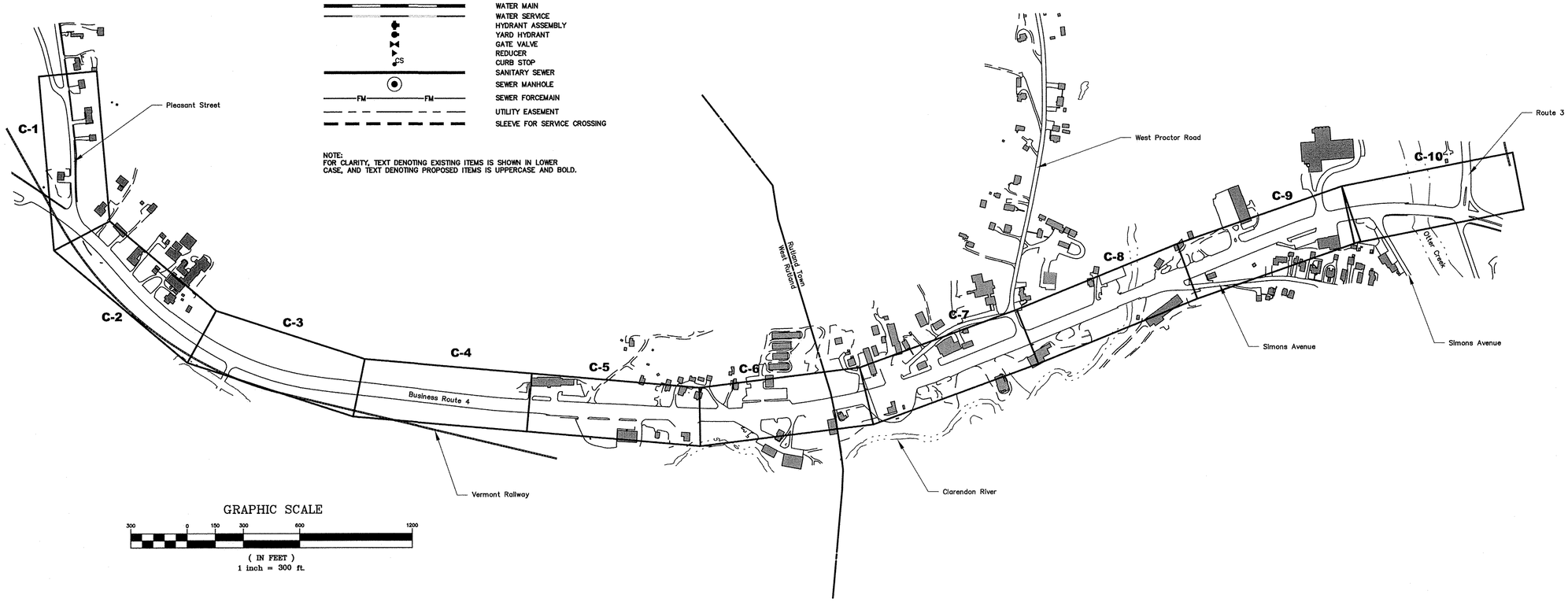

GRAPHIC SCALE

300 0 150 300 600 1200

(IN FEET)
1 inch = 300 ft.

SHEET	TITLE	REV. NO.	DATE
I-1	LOCATION PLAN AND INDEX	-	-
C-1	PLAN AND PROFILE	-	-
C-2	PLAN AND PROFILE	-	-
C-3	PLAN AND PROFILE	-	-
C-4	PLAN AND PROFILE	-	-
C-5	PLAN AND PROFILE	-	-
C-6	PLAN AND PROFILE	-	-
C-7	PLAN AND PROFILE	-	-
C-8	PLAN AND PROFILE	-	-
C-9	PLAN AND PROFILE	-	-
C-10	PLAN AND PROFILE	-	-
C-11	NOTES AND DETAILS	-	-
C-12	NOTES AND DETAILS	-	-
C-13	NOTES AND DETAILS	-	-
S-1	UTILITY CONNECTION TO BRIDGE SUPERSTRUCTURES	-	-

OTTER CREEK ENGINEERING

404 East Main Street
P.O. Box 712
East Middlebury, VT 05740
Telephone: 802 382-8522
Fax: 802 382-8640

110 Merchants Row
4th Floor, Suite 15
Rutland, VT 05701
Telephone: 802 747-3080
Fax: 802 747-4820

E-mail: info@ottercrk.com

STAMP AND SIGNATURE:

STATE OF VERMONT
CARL CRAMER
No. 7094
LICENSED
PROFESSIONAL ENGINEER

DESIGN ENGINEER

THESE DRAWINGS SHALL NOT BE ALTERED IN ANY WAY WITHOUT THE WRITTEN APPROVAL OF THE ENGINEER. ANY REVISIONS SHALL BE MADE BY THE ENGINEER AND NOTED IN THE REVISION BLOCK. © 2015

OTTER CREEK ENGINEERING, INC.

GRID NORTH

TOWN OF WEST RUTLAND

ROUTE 4 WATER AND SEWER EXTENSIONS

CENTER RUTLAND, VERMONT

PERMITTING

DATE ISSUED:	4/17/15
REVISIONS:	
DRAWN BY:	HB
CHECKED BY:	CC
SCALE:	1"=300'
PROJECT NO.:	168-017
CADD FILE:	168-017 I-1

TITLE:
LOCATION PLAN AND INDEX

DRAWING NO.

I-1

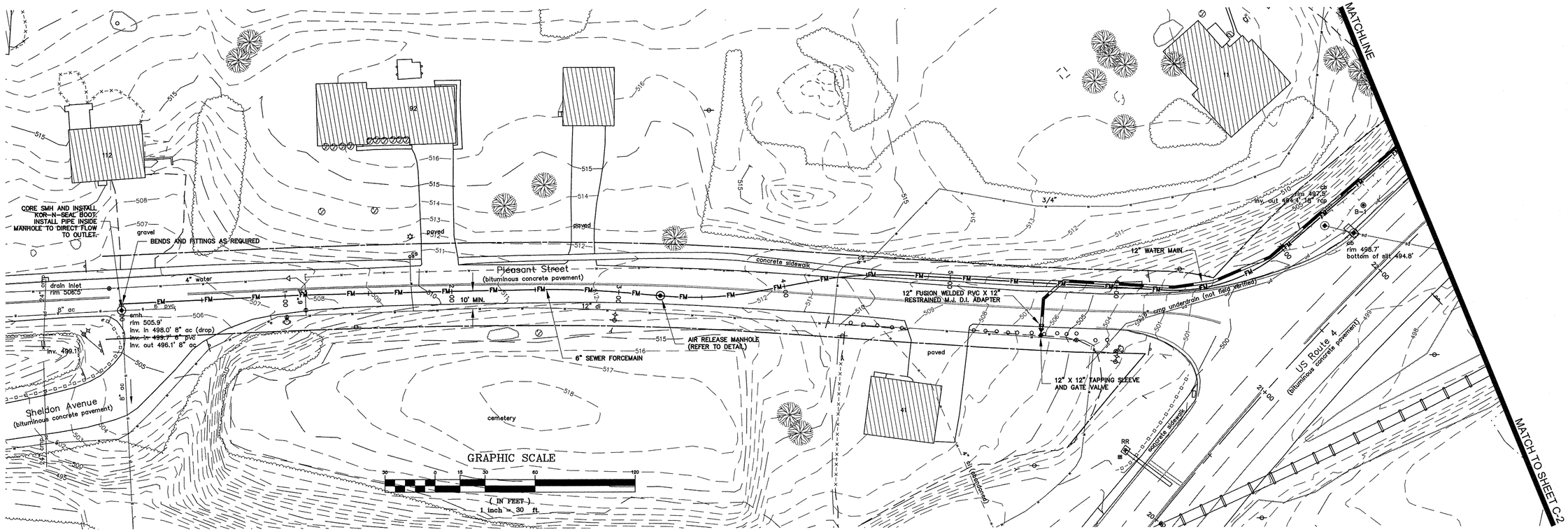

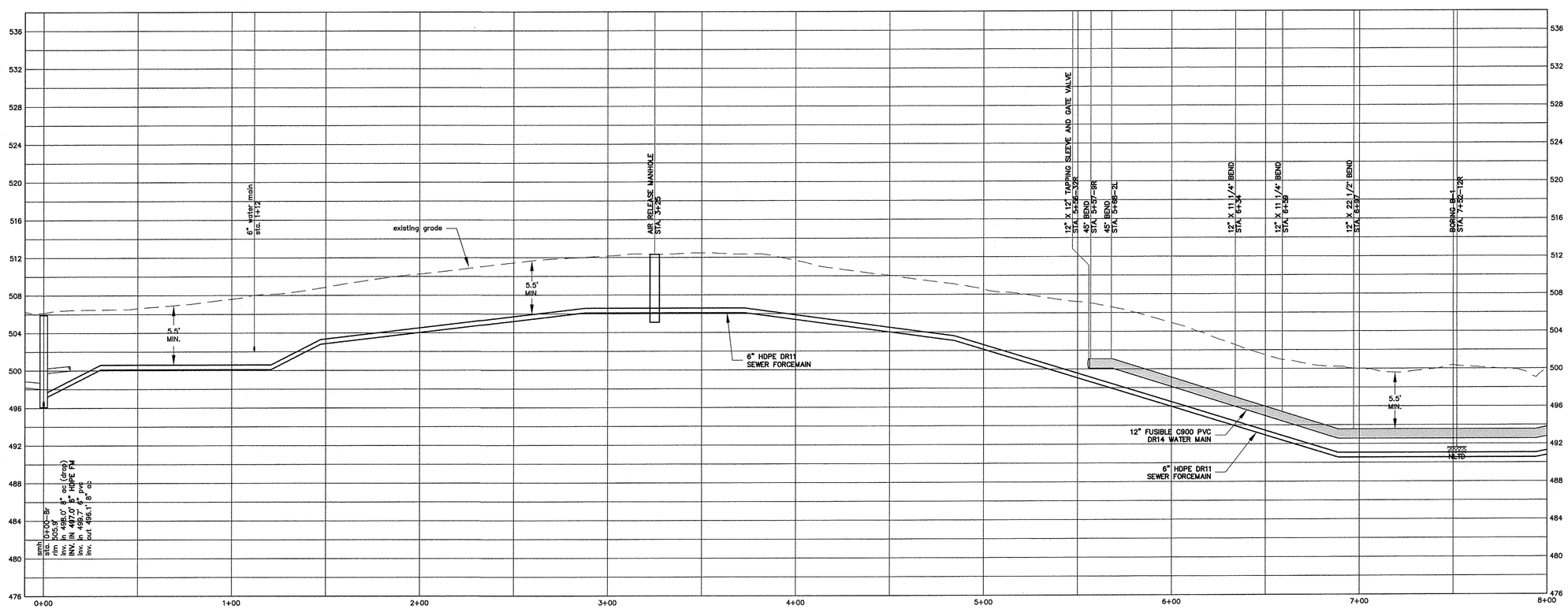

SEWER FORCEMAIN PROFILE

SCALE: 1"=30' HORIZONTAL
1"=6' VERTICAL

OTTER CREEK ENGINEERING

404 East Main Street
P.O. Box 712
East Middlebury, VT 05740
Telephone: 802 382-8522
Fax: 802 382-8640

110 Merchants Row
4th Floor, Suite 15
Rutland, VT 05701
Telephone: 802 747-3080
Fax: 802 747-4820

E-mail: info@ottercrk.com

STAMP AND SIGNATURE:

STATE OF VERMONT
CARL CRAWFORD
No. 7014
LICENSED
PROFESSIONAL ENGINEER

DESIGN ENGINEER

THESE DRAWINGS SHALL NOT BE ALTERED IN ANY WAY WITHOUT THE WRITTEN APPROVAL OF THE ENGINEER. ANY REVISIONS SHALL BE MADE BY THE ENGINEER AND NOTED IN THE REVISION BLOCK. © 2015

OTTER CREEK ENGINEERING, INC.

GRID NORTH

TOWN OF WEST RUTLAND

ROUTE 4 WATER AND SEWER EXTENSIONS

CENTER RUTLAND, VERMONT

PERMITTING

DATE ISSUED:	4/17/15
REVISIONS:	
DRAWN BY:	HB
CHECKED BY:	CC
SCALE:	1" = 30'
PROJECT NO.:	168-017
CADD FILE:	168-017

TITLE:

PLAN AND PROFILE

DRAWING NO.

C-1

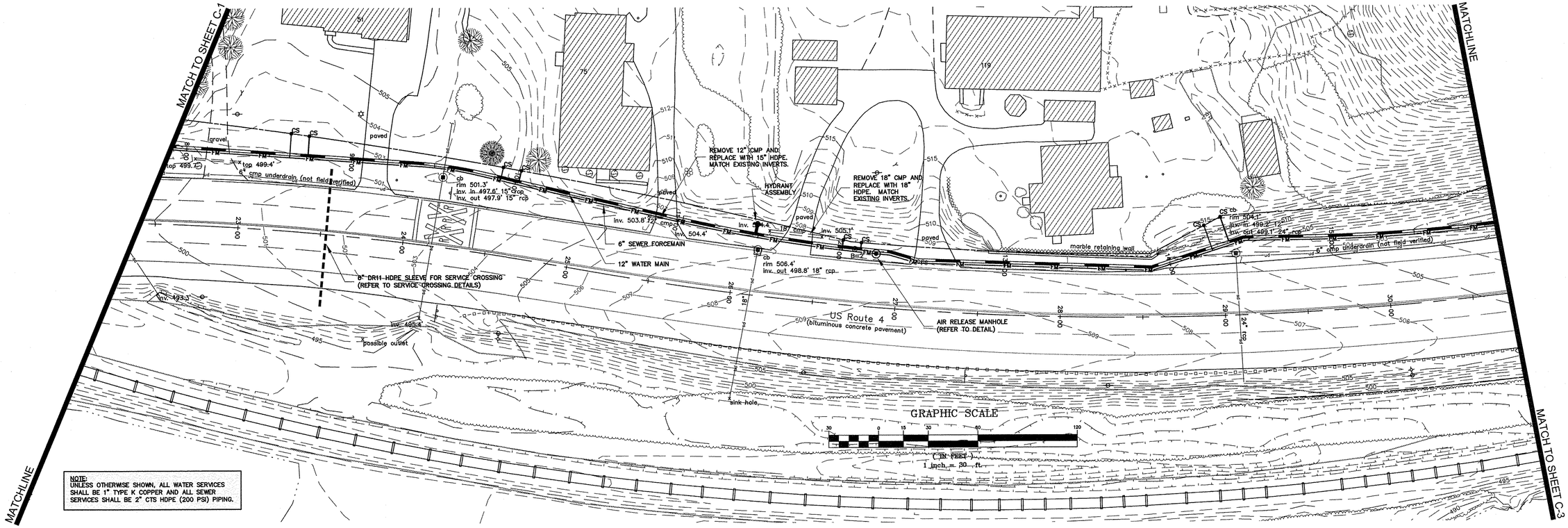

NOTE:
UNLESS OTHERWISE SHOWN, ALL WATER SERVICES SHALL BE 1" TYPE K COPPER AND ALL SEWER SERVICES SHALL BE 2" CTS HDPE (200 PSI) PIPING.

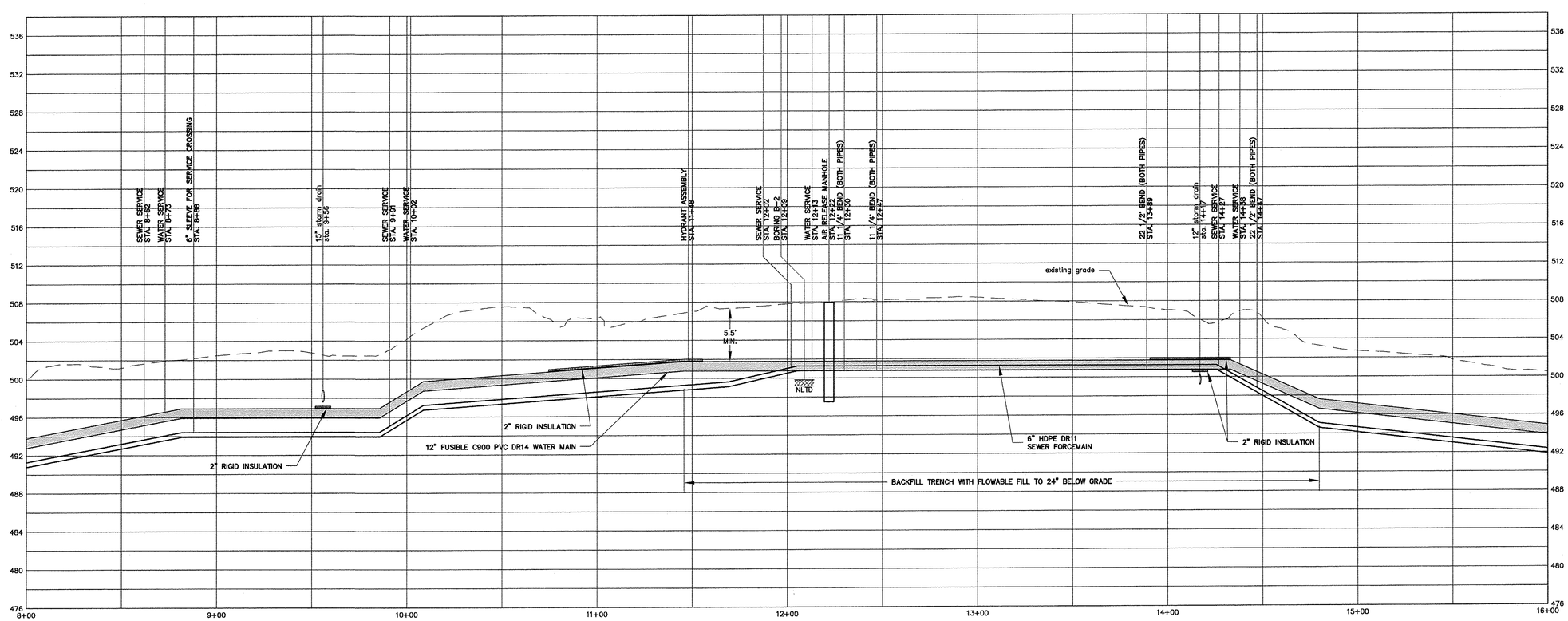

WATER AND SEWER FORCEMAIN PROFILE

SCALE: 1"=30' HORIZONTAL
1"=6' VERTICAL

OTTER CREEK ENGINEERING
404 East Main Street
P.O. Box 712
East Middlebury, VT 05740
Telephone: 802 382-8522
Fax: 802 382-8640
~
110 Merchants Row
4th Floor, Suite 15
Rutland, VT 05701
Telephone: 802 747-3080
Fax: 802 747-4820
~
E-mail: info@ottercrk.com

STAMP AND SIGNATURE:

STATE OF VERMONT
CARL CRAWFORD
No. 7014
CIVIL
LICENSED
PROFESSIONAL ENGINEER

DESIGN ENGINEER

THESE DRAWINGS SHALL NOT BE ALTERED IN ANY WAY WITHOUT THE WRITTEN APPROVAL OF THE ENGINEER. ANY REVISIONS SHALL BE MADE BY THE ENGINEER AND NOTED IN THE REVISION BLOCK. © 2015
OTTER CREEK ENGINEERING, INC.

GRID NORTH

TOWN OF WEST RUTLAND

ROUTE 4 WATER AND SEWER EXTENSIONS

CENTER RUTLAND, VERMONT

PERMITTING

DATE ISSUED:	4/17/15
REVISIONS:	
DRAWN BY:	HB
CHECKED BY:	CC
SCALE:	1" = 30'
PROJECT NO.:	168-017
CADD FILE:	168-017
TITLE:	PLAN AND PROFILE
DRAWING NO.	C-2

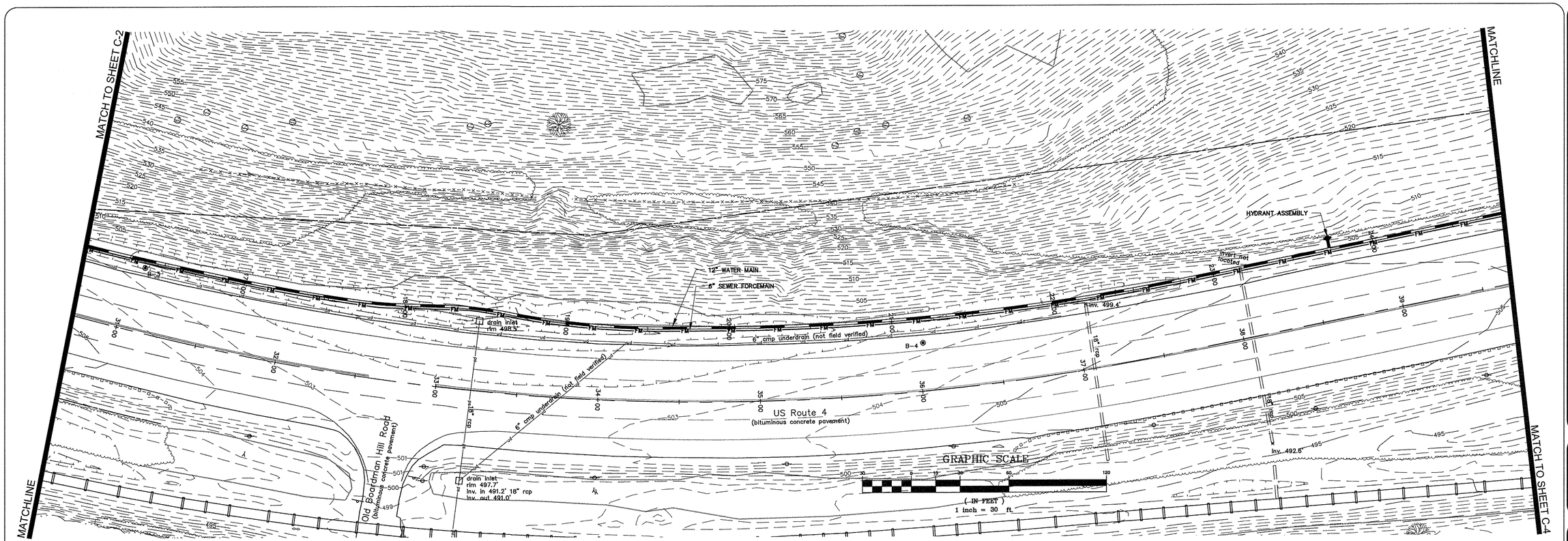

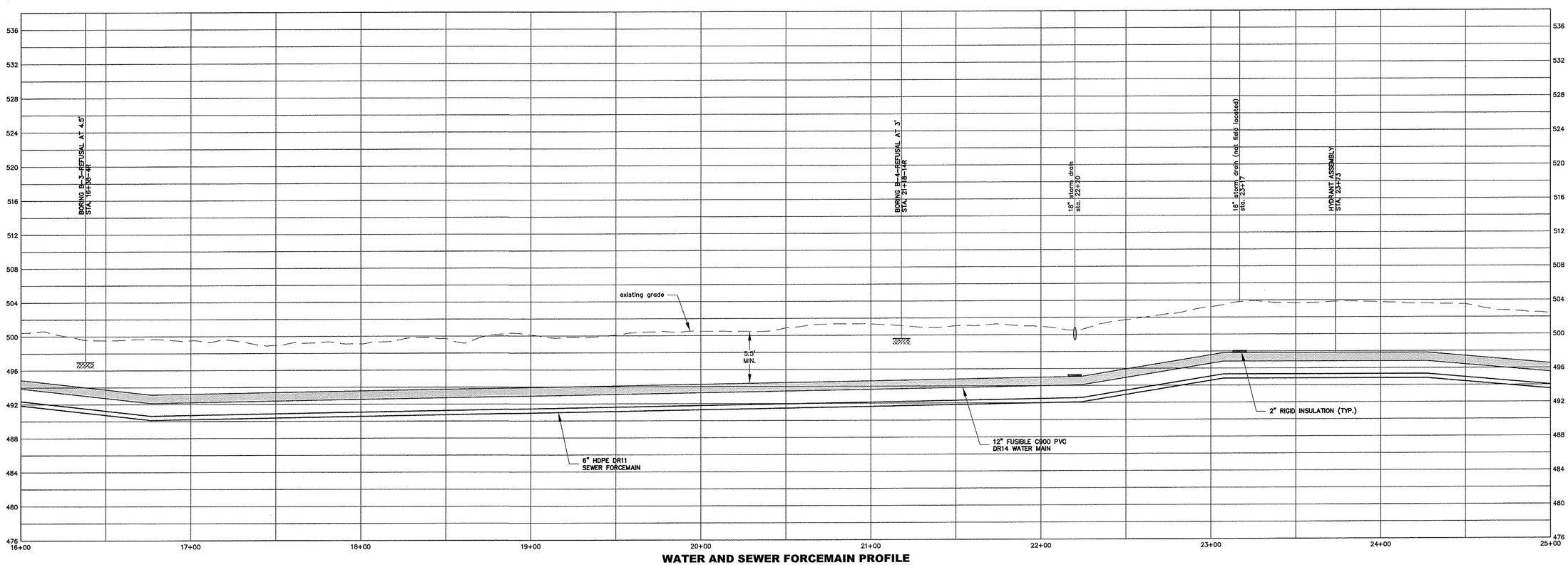

WATER AND SEWER FORCEMAIN PROFILE

SCALE: 1"=30' HORIZONTAL
1"=6' VERTICAL

OTTER CREEK ENGINEERING

404 East Main Street
P.O. Box 712
East Middlebury, VT 05740
Telephone: 802 382-8522
Fax: 802 382-8640

110 Merchants Row
4th Floor, Suite 15
Rutland, VT 05701
Telephone: 802 747-3080
Fax: 802 747-4820

E-mail: info@ottercrk.com

STAMP AND SIGNATURE:

STATE OF VERMONT
CARL CRAIGHEAD
No. 7094
CIVIL
LICENSED
PROFESSIONAL ENGINEER

DESIGN ENGINEER

THESE DRAWINGS SHALL NOT BE ALTERED IN ANY WAY WITHOUT THE WRITTEN APPROVAL OF THE ENGINEER. ANY REVISIONS SHALL BE MADE BY THE ENGINEER AND NOTED IN THE REVISION BLOCK. © 2015

OTTER CREEK ENGINEERING, INC.

GRID NORTH

TOWN OF WEST RUTLAND

ROUTE 4 WATER AND SEWER EXTENSIONS

CENTER RUTLAND, VERMONT

PERMITTING

DATE ISSUED:	4/17/15
REVISIONS:	
DRAWN BY:	HB
CHECKED BY:	CC
SCALE:	1" = 30'
PROJECT NO.:	168-017
CADD FILE:	168-017

TITLE:

PLAN AND PROFILE

DRAWING NO.

C-3

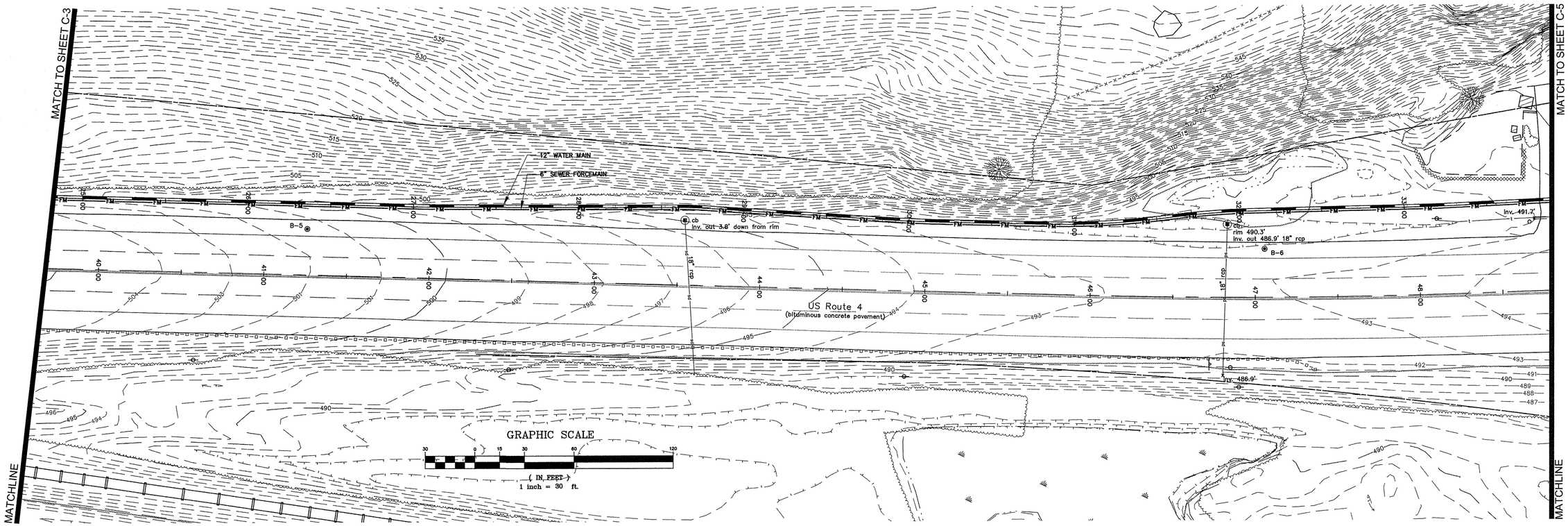

WATER AND SEWER FORCEMAIN PROFILE

SCALE: 1"=30' HORIZONTAL
1"=6' VERTICAL

OTTER CREEK ENGINEERING
404 East Main Street
P.O. Box 712
East Middlebury, VT 05740
Telephone: 802 382-8522
Fax: 802 382-8640
110 Merchants Row
4th Floor, Suite 15
Rutland, VT 05701
Telephone: 802 747-3080
Fax: 802 747-4820
E-mail: info@ottercrk.com

STAMP AND SIGNATURE:

STATE OF VERMONT
CARL CRAWFORD
No. 7014
LCVIL
LICENSED
PROFESSIONAL ENGINEER

DESIGN ENGINEER

THESE DRAWINGS SHALL NOT BE ALTERED IN ANY WAY WITHOUT THE WRITTEN APPROVAL OF THE ENGINEER. ANY REVISIONS SHALL BE MADE BY THE ENGINEER AND NOTED IN THE REVISION BLOCK. © 2015
OTTER CREEK ENGINEERING, INC.

GRID NORTH

TOWN OF WEST RUTLAND

ROUTE 4 WATER AND SEWER EXTENSIONS

CENTER RUTLAND, VERMONT

PERMITTING

DATE ISSUED:	4/17/15
REVISIONS:	
DRAWN BY:	HB
CHECKED BY:	CC
SCALE:	1" = 30'
PROJECT NO.:	168-017
CADD FILE:	168-017

TITLE:

PLAN AND PROFILE

DRAWING NO.

C-4

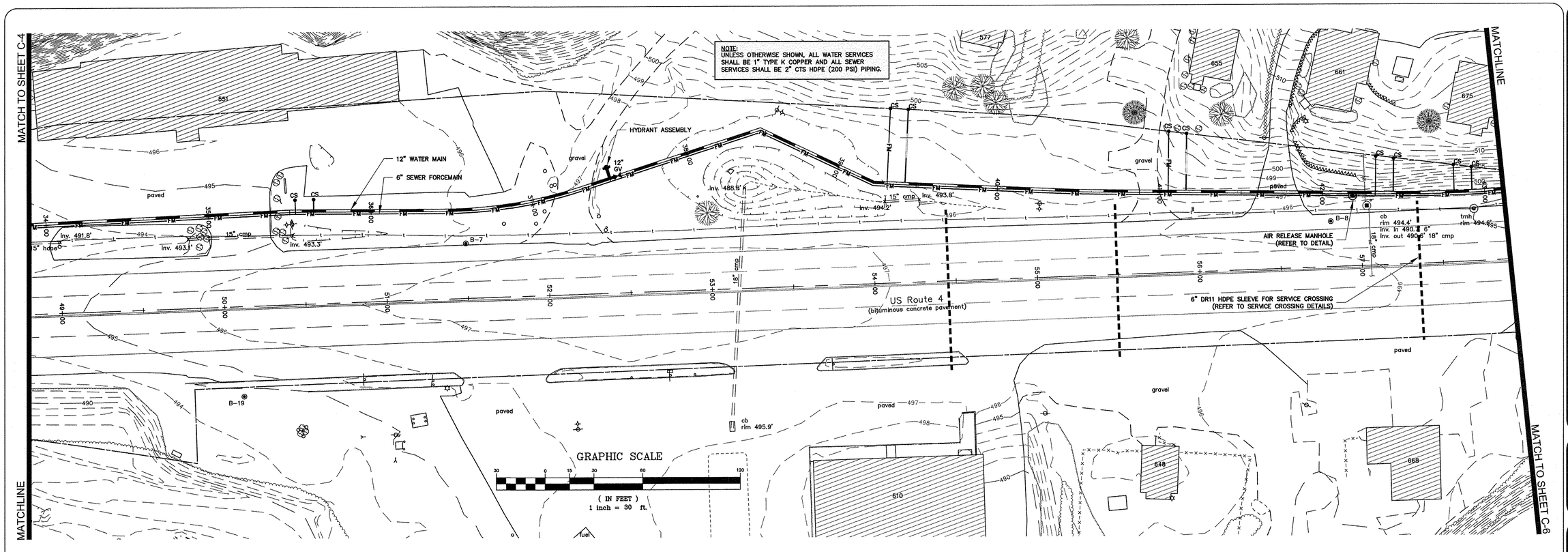

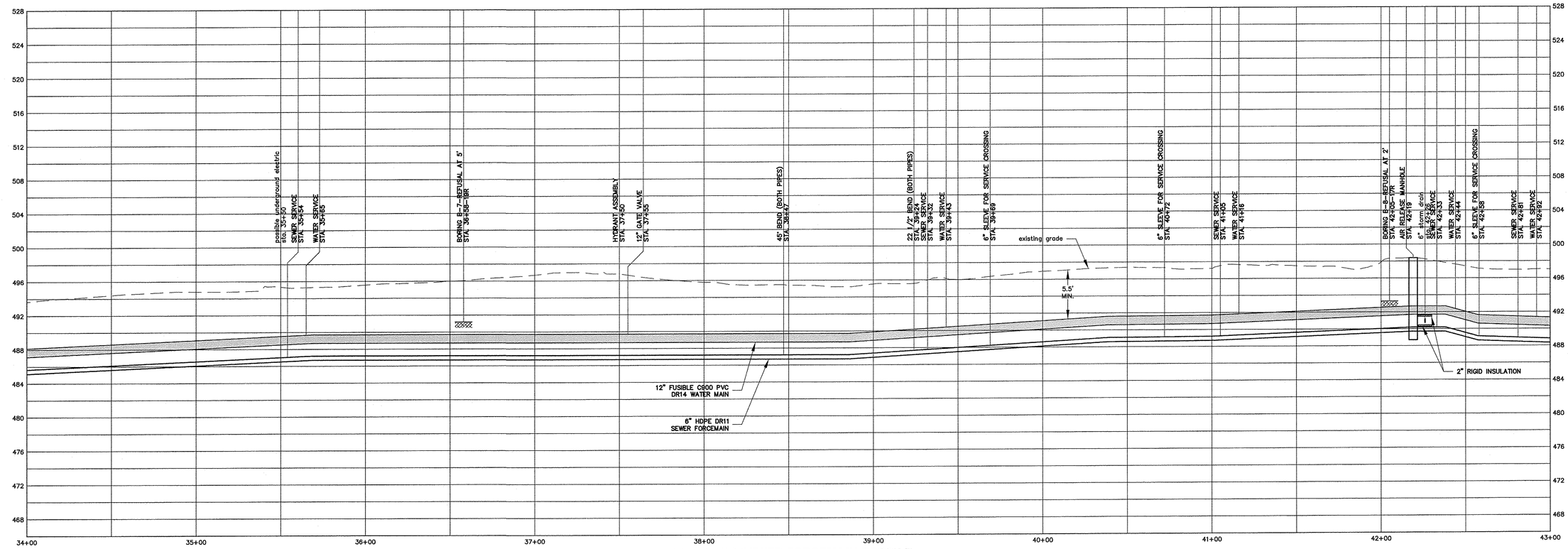

WATER AND SEWER FORCEMAIN PROFILE

SCALE: 1"=30' HORIZONTAL
1"=6' VERTICAL

OTTER CREEK ENGINEERING
404 East Main Street
P.O. Box 712
East Middlebury, VT 05740
Telephone: 802 382-8522
Fax: 802 382-8640
110 Merchants Row
4th Floor, Suite 15
Rutland, VT 05701
Telephone: 802 747-3080
Fax: 802 747-4820
E-mail: info@ottercrk.com

STAMP AND SIGNATURE:

STATE OF VERMONT
CARL CRAWFORD
No. 7014
LICENSED
PROFESSIONAL ENGINEER

DESIGN ENGINEER

THESE DRAWINGS SHALL NOT BE ALTERED IN ANY WAY WITHOUT THE WRITTEN APPROVAL OF THE ENGINEER. ANY REVISIONS SHALL BE MADE BY THE ENGINEER AND NOTED IN THE REVISION BLOCK. © 2015
OTTER CREEK ENGINEERING, INC.

GRID NORTH

TOWN OF WEST RUTLAND

ROUTE 4 WATER AND SEWER EXTENSIONS

CENTER RUTLAND, VERMONT

PERMITTING

DATE ISSUED:	4/17/15
REVISIONS:	
DRAWN BY:	HB
CHECKED BY:	CC
SCALE:	1" = 30'
PROJECT NO.:	168-017
CADD FILE:	168-017

TITLE:

PLAN AND PROFILE

DRAWING NO.

C-5

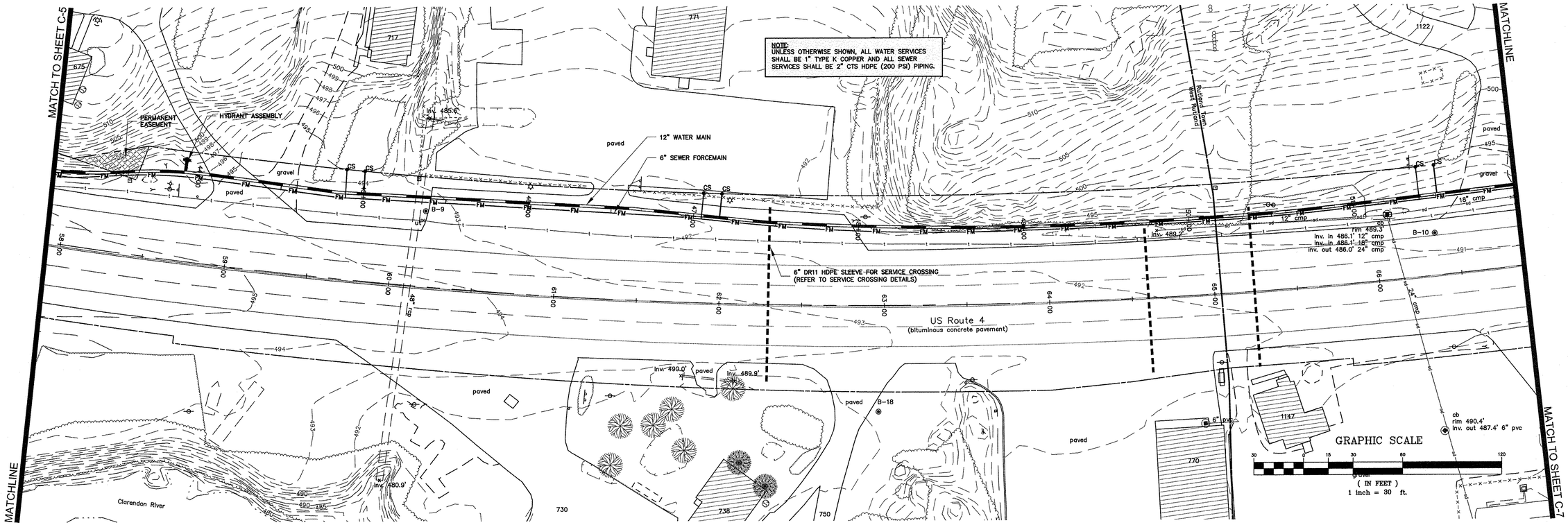

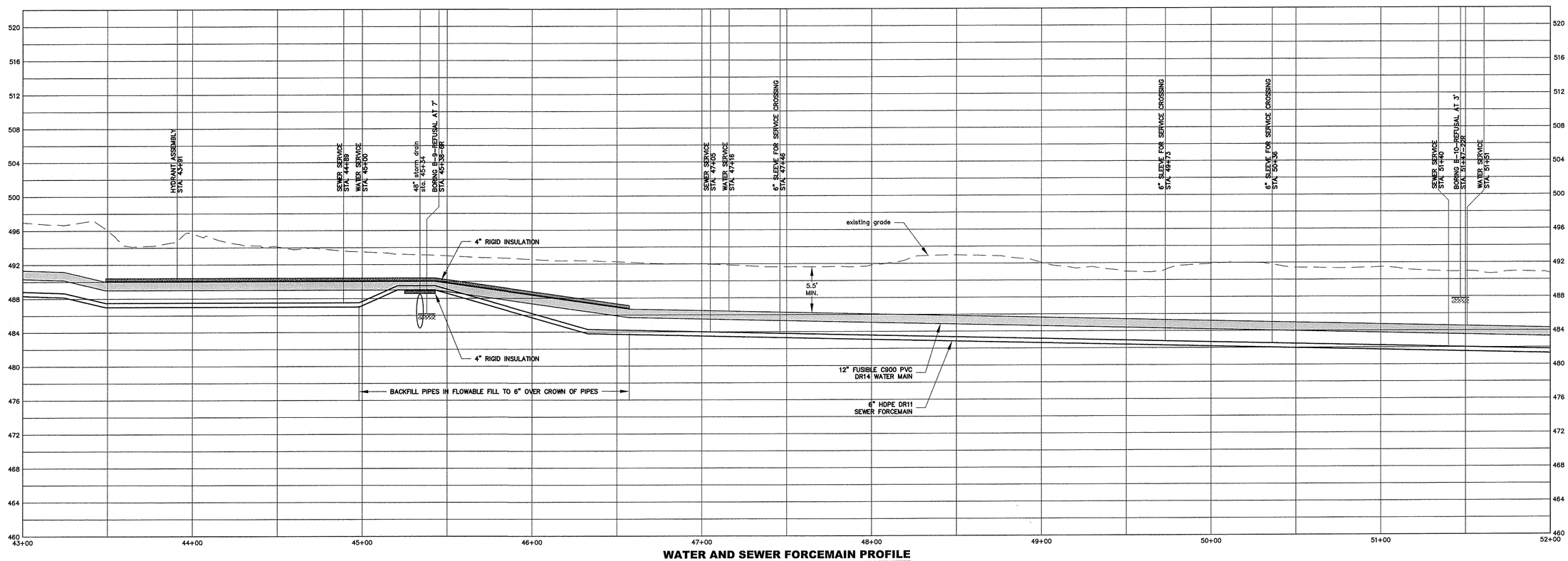

WATER AND SEWER FORCEMAIN PROFILE

SCALE: 1"=30' HORIZONTAL
1"=6' VERTICAL

OTTER CREEK ENGINEERING
404 East Main Street
P.O. Box 712
East Middlebury, VT 05740
Telephone: 802 382-8522
Fax: 802 382-8640
~
110 Merchants Row
4th Floor, Suite 15
Rutland, VT 05701
Telephone: 802 747-3080
Fax: 802 747-4820
~
E-mail: info@ottercrk.com

STAMP AND SIGNATURE:

STATE OF VERMONT
CARL CRAWFORD
No. 7014
LICENSED
PROFESSIONAL ENGINEER

DESIGN ENGINEER

THESE DRAWINGS SHALL NOT BE ALTERED IN ANY WAY WITHOUT THE WRITTEN APPROVAL OF THE ENGINEER. ANY REVISIONS SHALL BE MADE BY THE ENGINEER AND NOTED IN THE REVISION BLOCK. © 2015
OTTER CREEK ENGINEERING, INC.

GRID NORTH

TOWN OF WEST RUTLAND

ROUTE 4 WATER AND SEWER EXTENSIONS

CENTER RUTLAND, VERMONT

PERMITTING

DATE ISSUED:	4/17/15
REVISIONS:	
DRAWN BY:	HB
CHECKED BY:	CC
SCALE:	1" = 30'
PROJECT NO.:	168-017
CADD FILE:	168-017
TITLE:	PLAN AND PROFILE
DRAWING NO.	C-6

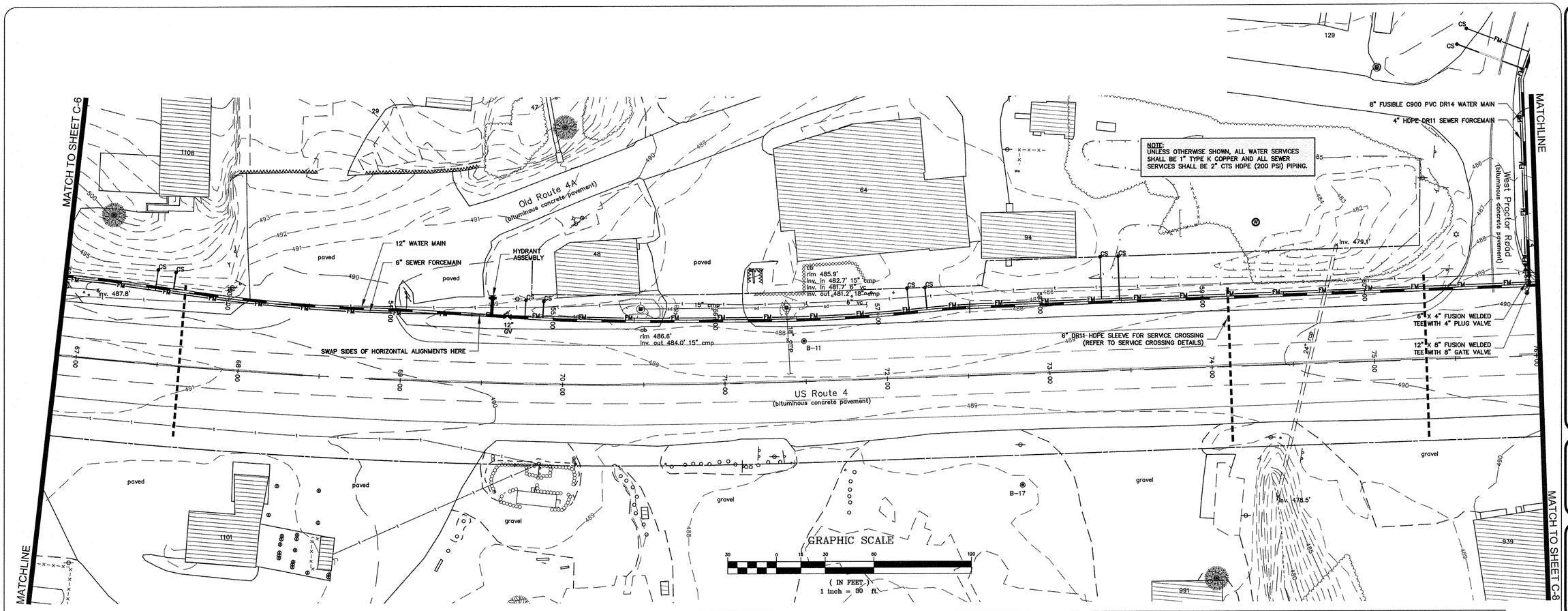

WATER AND SEWER FORCEMAIN PROFILE

SCALE: 1"=30' HORIZONTAL
1"=6' VERTICAL

OTTER CREEK ENGINEERING
404 East Main Street
P.O. Box 712
East Middlebury, VT 05740
Telephone: 802 382-8522
Fax: 802 382-8640
~
110 Merchants Row
4th Floor, Suite 15
Rutland, VT 05701
Telephone: 802 747-3080
Fax: 802 747-4820
~
E-mail: info@ottercrk.com

STAMP AND SIGNATURE:

STATE OF VERMONT
CARL CRAWFORD
No. 7014
CIVIL
LICENSED
PROFESSIONAL ENGINEER

DESIGN ENGINEER

THESE DRAWINGS SHALL NOT BE ALTERED IN ANY WAY WITHOUT THE WRITTEN APPROVAL OF THE ENGINEER. ANY REVISIONS SHALL BE MADE BY THE ENGINEER AND NOTED IN THE REVISION BLOCK. © 2015
OTTER CREEK ENGINEERING, INC.

GRID NORTH

TOWN OF WEST RUTLAND

ROUTE 4 WATER AND SEWER EXTENSIONS

CENTER RUTLAND, VERMONT

PERMITTING

DATE ISSUED:	4/17/15
REVISIONS:	
DRAWN BY:	HB
CHECKED BY:	CC
SCALE:	1" = 30'
PROJECT NO.:	168-017
CADD FILE:	168-017

TITLE:

PLAN AND PROFILE

DRAWING NO.

C-7

NOTE:
UNLESS OTHERWISE SHOWN, ALL WATER SERVICES SHALL BE 1" TYPE K COPPER AND ALL SEWER SERVICES SHALL BE 2" CTS HDPE (200 PSI) PIPING.

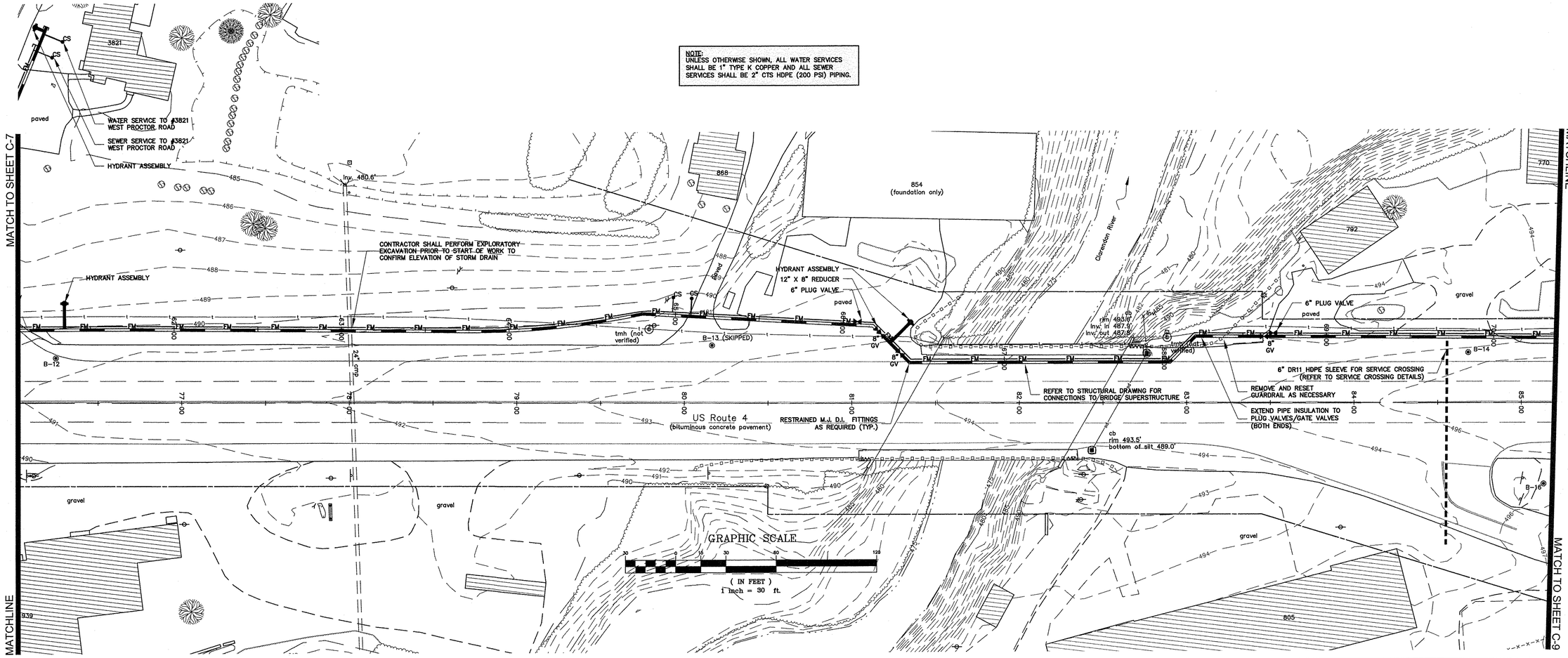

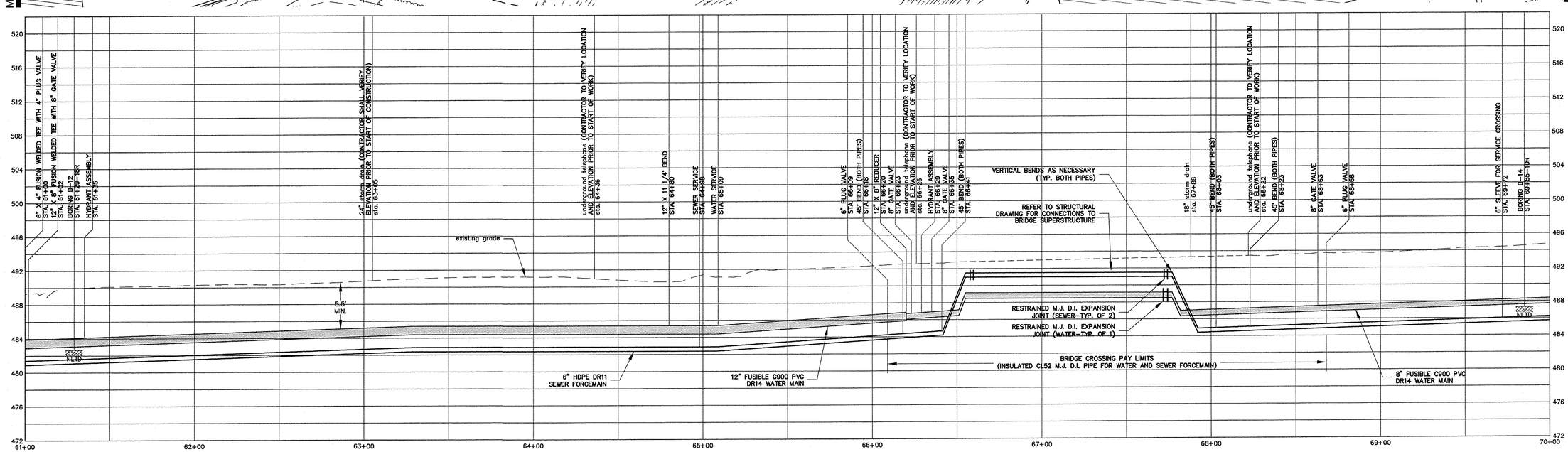

WATER AND SEWER FORCEMAIN PROFILE

SCALE: 1"=30' HORIZONTAL
1"=6' VERTICAL

OTTER CREEK ENGINEERING

404 East Main Street
P.O. Box 712
East Middlebury, VT 05740
Telephone: 802 382-8522
Fax: 802 382-8640

110 Merchants Row
4th Floor, Suite 15
Rutland, VT 05701
Telephone: 802 747-3080
Fax: 802 747-4820

E-mail: info@ottercrk.com

STAMP AND SIGNATURE:

STATE OF VERMONT
CARL CRAWFORD LONG
No. 7094
LICENSED
PROFESSIONAL ENGINEER

DESIGN ENGINEER

THESE DRAWINGS SHALL NOT BE ALTERED IN ANY WAY WITHOUT THE WRITTEN APPROVAL OF THE ENGINEER. ANY REVISIONS SHALL BE MADE BY THE ENGINEER AND NOTED IN THE REVISION BLOCK. © 2015

OTTER CREEK ENGINEERING, INC.

GRID NORTH

TOWN OF WEST RUTLAND

ROUTE 4 WATER AND SEWER EXTENSIONS

CENTER RUTLAND, VERMONT

PERMITTING

DATE ISSUED:	4/17/15
REVISIONS:	
DRAWN BY:	HB
CHECKED BY:	CC
SCALE:	1" = 30'
PROJECT NO.:	168-017
CADD FILE:	168-017

TITLE:

PLAN AND PROFILE

DRAWING NO.

C-8

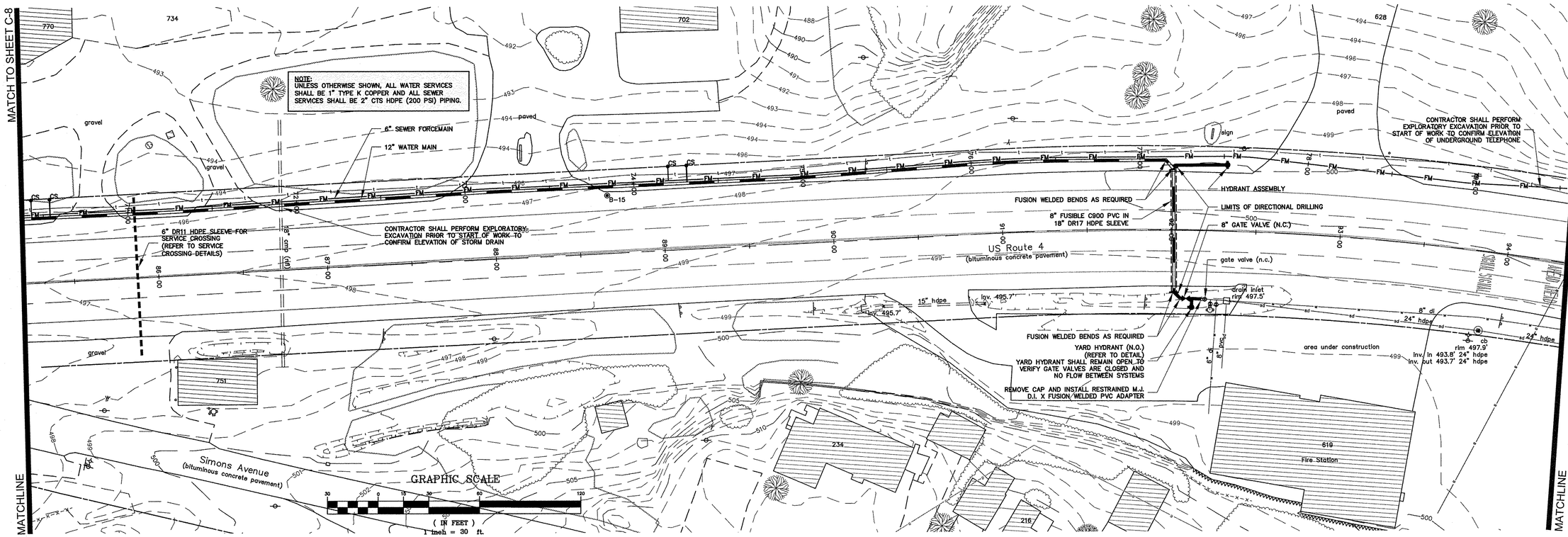

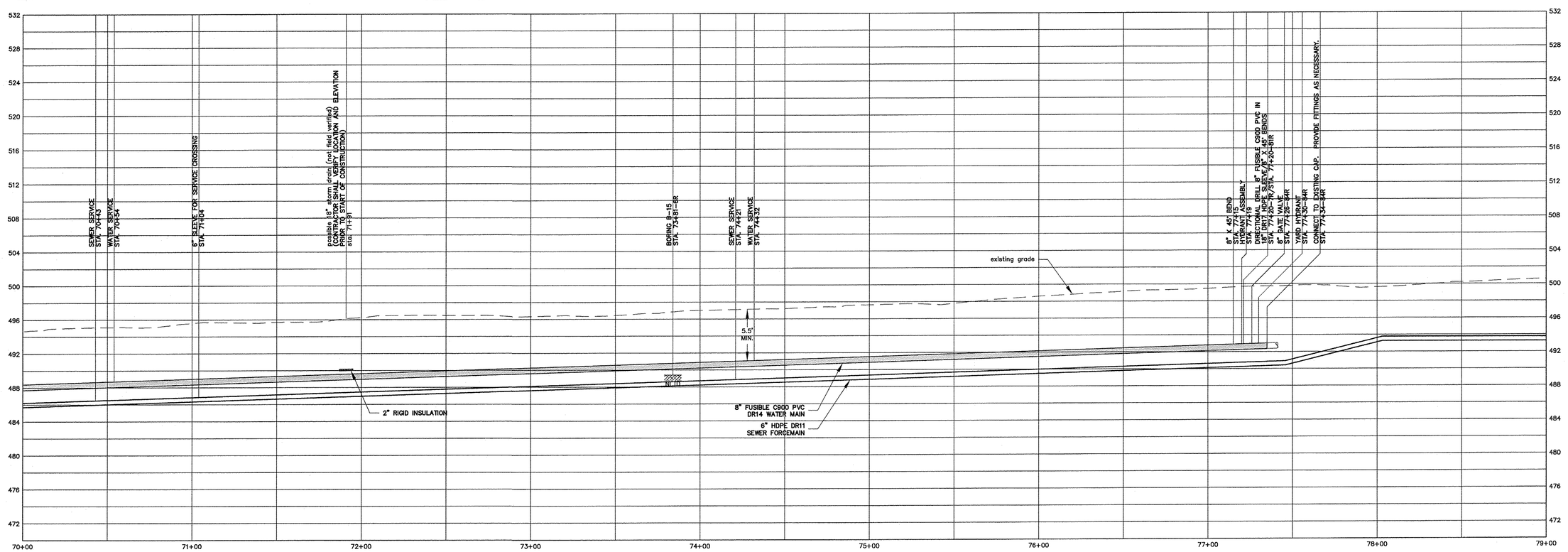

WATER AND SEWER FORCEMAIN PROFILE

SCALE: 1"=30' HORIZONTAL
1"=6' VERTICAL

OTTER CREEK ENGINEERING
404 East Main Street
P.O. Box 712
East Middlebury, VT 05740
Telephone: 802 382-8522
Fax: 802 382-8640
~
110 Merchants Row
4th Floor, Suite 15
Rutland, VT 05701
Telephone: 802 747-3080
Fax: 802 747-4820
~
E-mail: info@ottercrk.com

STAMP AND SIGNATURE:

STATE OF VERMONT
CARL CRAWFORD
No. 7014
CIVIL
LICENSED
PROFESSIONAL ENGINEER

DESIGN ENGINEER

THESE DRAWINGS SHALL NOT BE ALTERED IN ANY WAY WITHOUT THE WRITTEN APPROVAL OF THE ENGINEER. ANY REVISIONS SHALL BE MADE BY THE ENGINEER AND NOTED IN THE REVISION BLOCK. © 2015
OTTER CREEK ENGINEERING, INC.

GRID NORTH

TOWN OF WEST RUTLAND

ROUTE 4 WATER AND SEWER EXTENSIONS

CENTER RUTLAND, VERMONT

PERMITTING

DATE ISSUED:	4/17/15
REVISIONS:	
DRAWN BY:	HB
CHECKED BY:	CC
SCALE:	1" = 30'
PROJECT NO.:	168-017
CADD FILE:	168-017
TITLE:	PLAN AND PROFILE
DRAWING NO.	C-9

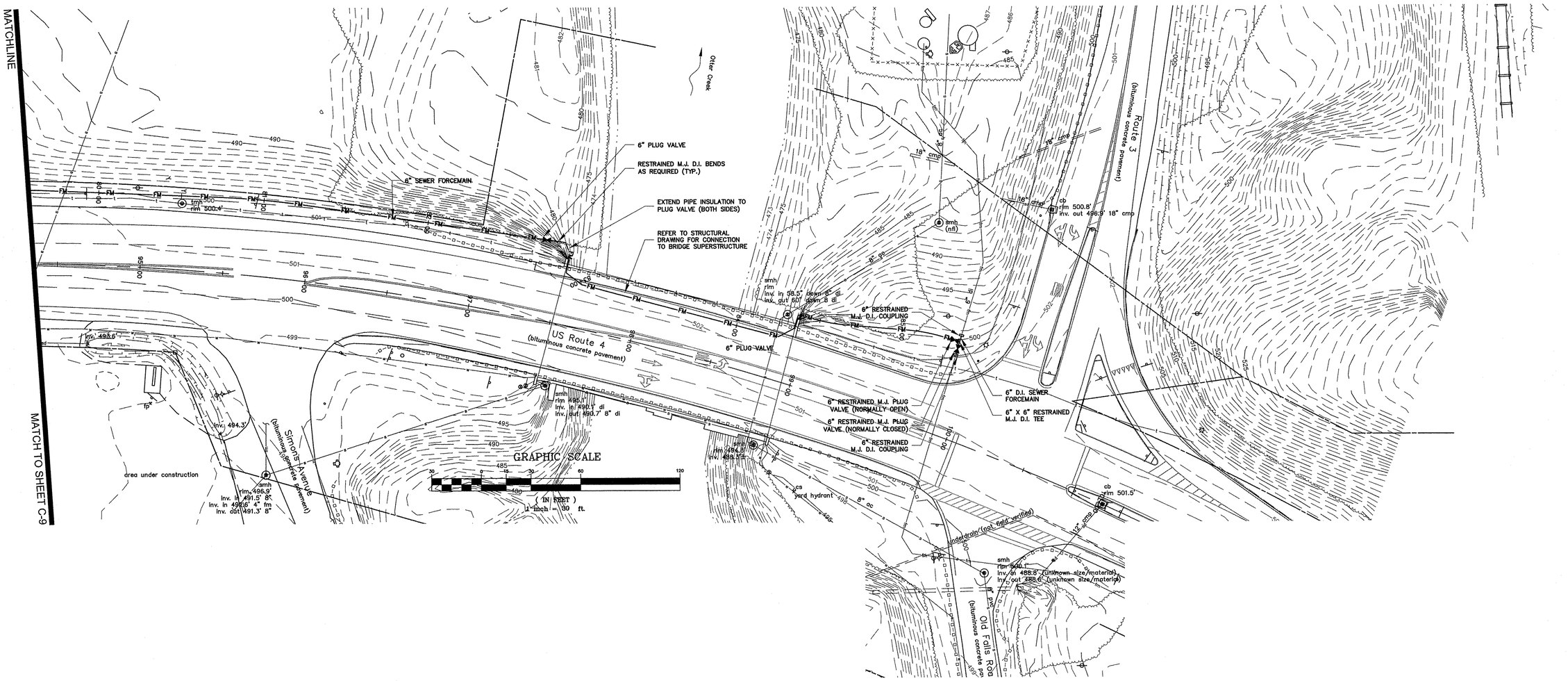

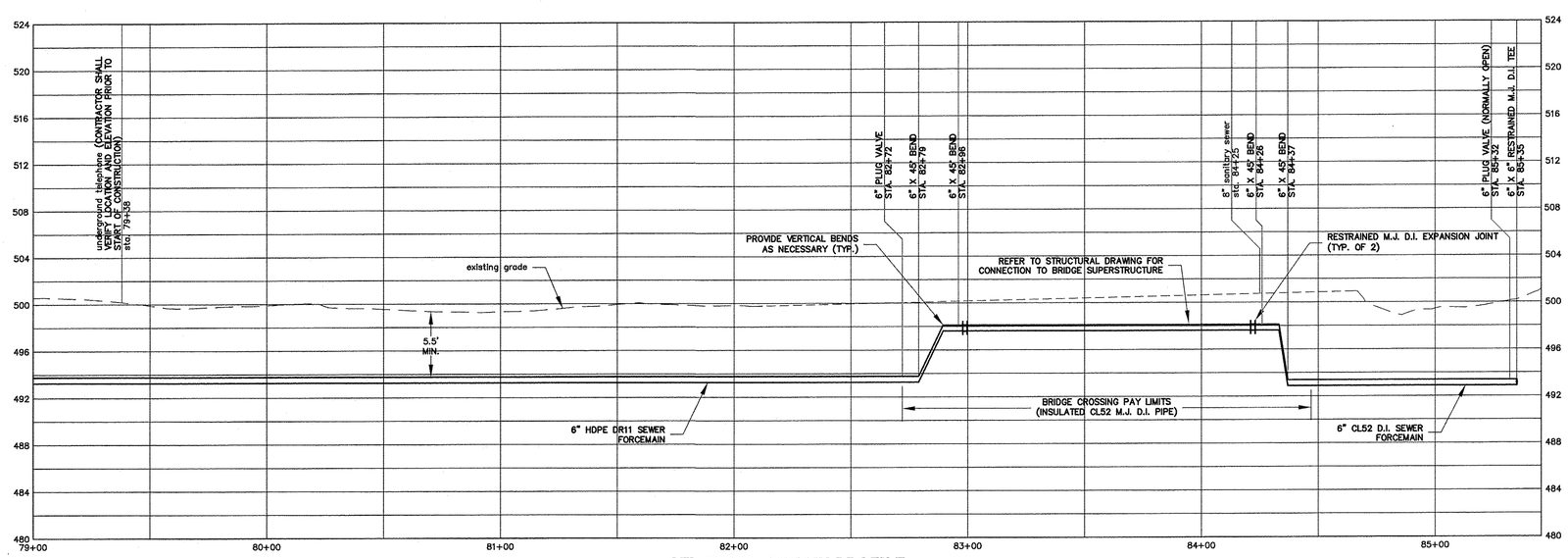

SEWER FORCEMAIN PROFILE

SCALE: 1"=30' HORIZONTAL
1"=6' VERTICAL

OTTER CREEK ENGINEERING
404 East Main Street
P.O. Box 712
East Middlebury, VT 05740
Telephone: 802 382-8522
Fax: 802 382-8640
110 Merchants Row
4th Floor, Suite 15
Rutland, VT 05701
Telephone: 802 747-3080
Fax: 802 747-4820
E-mail: info@ottercrk.com

STAMP AND SIGNATURE:

STATE OF VERMONT
CARL CRAWFORD
No. 7014
LCIVIL
LICENSED
PROFESSIONAL ENGINEER

DESIGN ENGINEER

THESE DRAWINGS SHALL NOT BE ALTERED IN ANY WAY WITHOUT THE WRITTEN APPROVAL OF THE ENGINEER. ANY REVISIONS SHALL BE MADE BY THE ENGINEER AND NOTED IN THE REVISION BLOCK. © 2015
OTTER CREEK ENGINEERING, INC.

GRID NORTH

TOWN OF WEST RUTLAND

ROUTE 4 WATER AND SEWER EXTENSIONS

CENTER RUTLAND, VERMONT

PERMITTING

DATE ISSUED:	4/17/15
REVISIONS:	
DRAWN BY:	HB
CHECKED BY:	CC
SCALE:	1" = 30'
PROJECT NO.:	168-017
CADD FILE:	168-017
TITLE:	PLAN AND PROFILE
DRAWING NO.	C-10

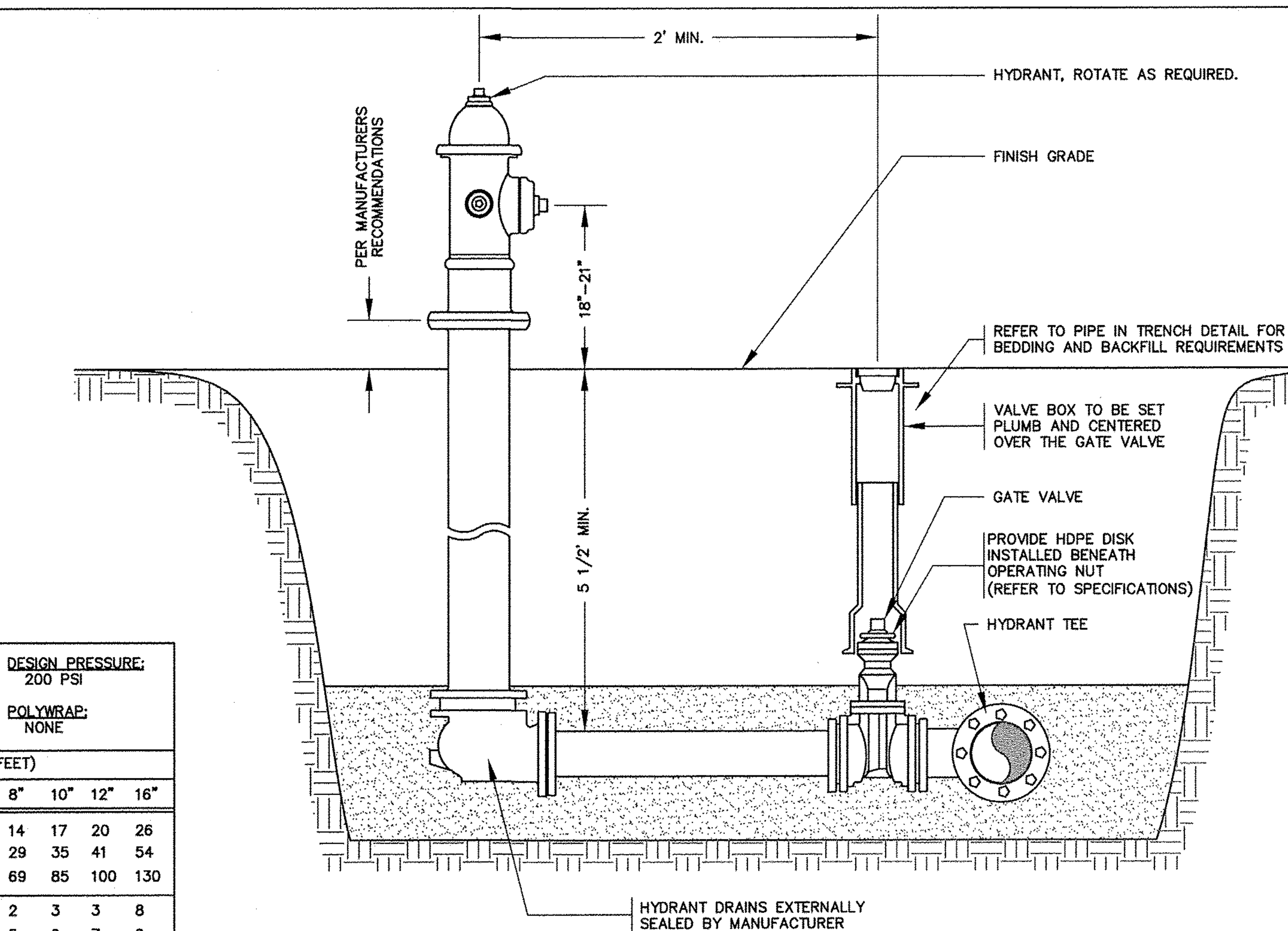

NOTE:
1. ALL MECHANICAL JOINT FITTINGS SHALL HAVE "MEGALUG" RETAINER GLANDS.

HYDRANT ASSEMBLY DETAIL

NOT TO SCALE

ASSUMED CONDITIONS:
DEPTH 5.5' MIN.
SAFETY FACTOR = 1.5
LAYING CONDITION = TYPE 4
18'-0" MIN. PIPE LAY LENGTH

REFERENCED STANDARD:
DIPRA DESIGN MANUAL

SOIL DESIGNATION:
COHESIVE GRANULAR

DESIGN PRESSURE:
200 PSI

POLYWRAP:
NONE

BEND

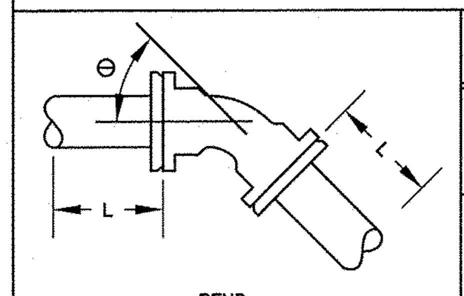

DESCRIPTION	Θ	L (FEET) 3"	4"	6"	8"	10"	12"	16"
VERTICAL DOWN BEND	22 1/2°	6	7	11	14	17	20	26
	45°	13	15	22	29	35	41	54
	90°	31	37	53	69	85	100	130
VERTICAL UP BEND OR HORIZONTAL BEND	11 1/4°	1	1	2	2	3	3	8
	22 1/2°	2	3	4	5	6	7	9
	45°	4	5	8	10	12	14	18
	90°	11	13	18	24	29	34	44

TEE

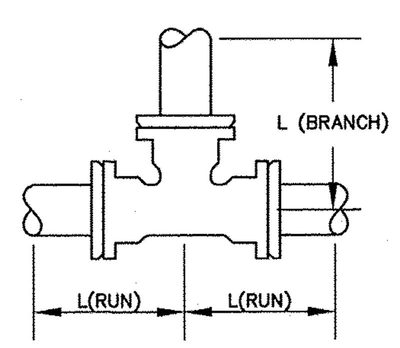

SIZE	L (BRANCH) (FEET)	L (RUN) (FEET)
4" x 4"	15	10
6" x 4"	9	10
6" x 6"	27	10
8" x 4"	3	10
8" x 6"	23	10
8" x 8"	39	10
10" x 4"	0	10
10" x 6"	19	10
10" x 8"	36	10
10" x 10"	50	10
12" x 4"	0	10
12" x 6"	15	10
12" x 8"	33	10
12" x 10"	48	10
12" x 12"	62	10
16" x 4"	0	10
16" x 6"	6	10
16" x 8"	26	10
16" x 10"	43	10
16" x 12"	57	10
16" x 16"	85	10

REDUCER

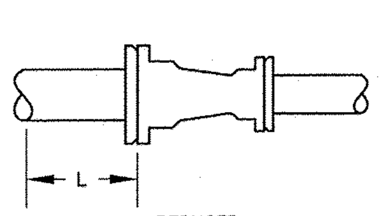

SIZE	L (FEET)
4" x 3"	9
6" x 3"	27
6" x 4"	20
8" x 4"	37
8" x 6"	22
10" x 4"	51
10" x 6"	39
10" x 8"	21
12" x 4"	65
12" x 6"	54
12" x 8"	40
12" x 10"	22
16" x 6"	82
16" x 8"	71
16" x 10"	58
16" x 12"	41
24" x 12"	105

DEAD END CAP OR DEAD END VALVE

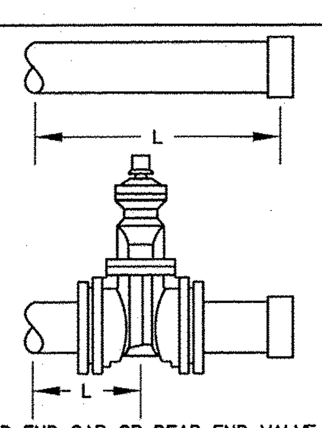

SIZE	L (FEET)
3"	23
4"	28
6"	40
8"	52
10"	63
12"	75
16"	98
24"	142

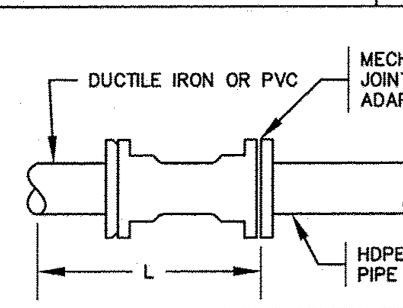

SIZE	L (FEET)
3"	40
4"	40
6"	40
8"	40
10"	60
12"	60
16"	80
24"	100

NOTE:
RESTRAINED PIPE AND FITTING JOINTS SHALL BE PROVIDED FOR ALL PIPE AND FITTING JOINTS WITHIN THE REQUIRED MINIMUM LENGTH (L) OF PIPE, EACH SIDE OF THE FITTING.

RESTRAINED PIPE JOINT DETAIL (200 psi)

NOT TO SCALE

AREA OF BEARING FACE OF CONCRETE THRUST BLOCKS
(IN SQUARE FEET)

PIPE SIZE (INCHES)	SOFT WET CLAY, SAND OR SILT (1000 PSF)	DRY SAND (3000 PSF)	COMPACT SAND, COARSE GRAVEL OR HARDPAN (5000 PSF)
HORIZONTAL CAP OR TEE			
8 OR LESS	20 SF	7 SF	4 SF
10	29	10	6
12	41	14	8
16	60	20	12
HORIZONTAL 90° BEND			
8 OR LESS	27 SF	9 SF	6 SF
10	41	14	8
12	58	19	12
16	85	28	17
HORIZONTAL 45° BEND			
8 OR LESS	15 SF	5 SF	3 SF
10	22	7	5
12	31	11	6
16	46	15	9
HORIZONTAL 22 1/2° BEND OR LESS			
8 OR LESS	8	3	2
10	11	4	2
12	16	5	3
16	23	8	5
REDUCER			
8 X 6	8 SF	7 SF	3 SF
10 X 8	11	7	5
12 X 8	16	11	6
12 X 10	24	14	8
16 X 12	27	16	10

NOTE: BEARING SURFACE AREAS CALCULATED ASSUMING A MAXIMUM WORKING PRESSURE OF 150 PSI AND A 2:1 SAFETY FACTOR FOR SURGE

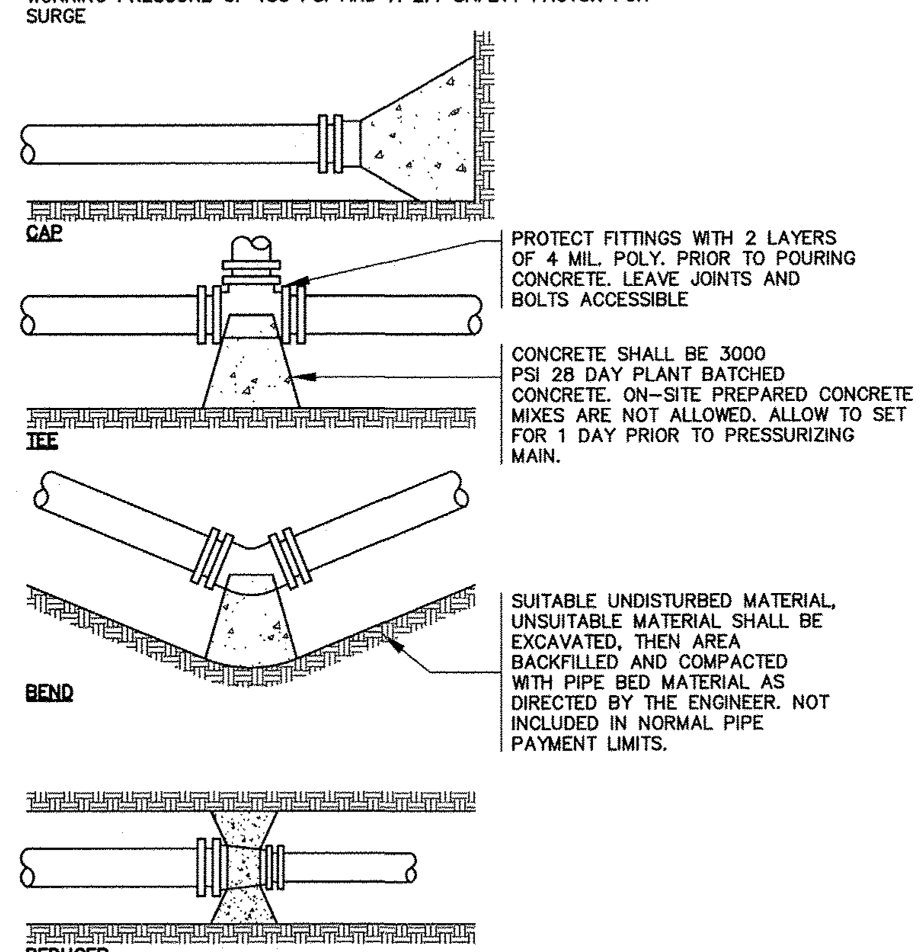

THRUST BLOCK DETAIL

NOT TO SCALE

NOTE: PROPOSED WATER MAIN SHALL BE RESTRAINED JOINT PIPE.
PROVIDE CONCRETE THRUST BLOCKS AT CONNECTIONS TO EXISTING PIPES.

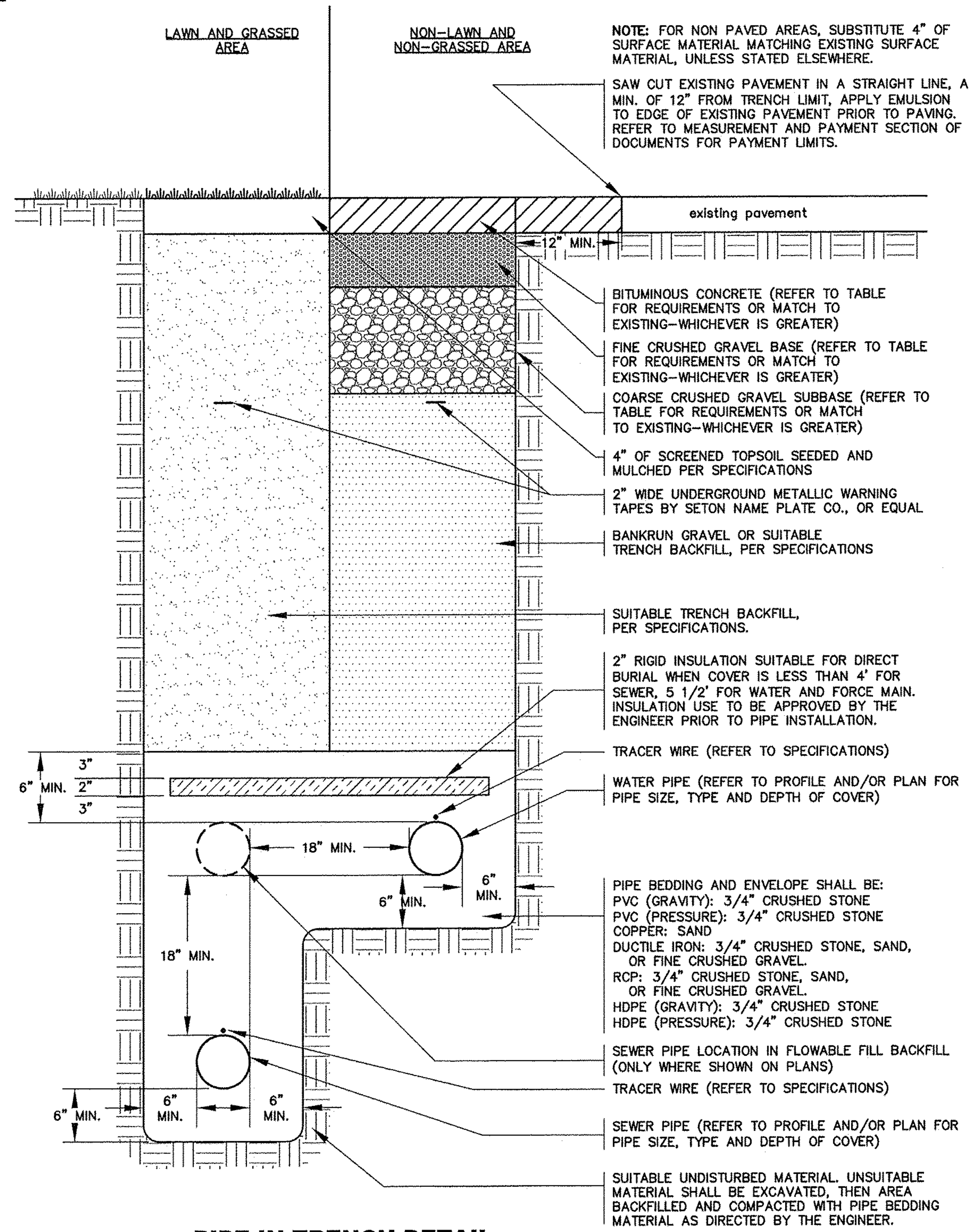

PIPE IN TRENCH DETAIL

NOT TO SCALE

TRENCH RESTORATION TABLE

LOCATION	BITUMINOUS PAVEMENT (THICKNESS/TYPE)	FINE CRUSHED GRAVEL BASE	COARSE CRUSHED GRAVEL SUBBASE
STATE VTRANS	TOP: 1.5"/TYPE 3 (1/2") BASE: 2.5"/TYPE 2 (3/4")	6"	18"
TOWN ROADS	TOP: 1.5"/TYPE 4 (3/8") BASE: 2.5"/TYPE 2 (3/4")	6"	12"
PRIVATE/DRIVE	TOP: 1.5"/TYPE 4 (3/8") BASE: 2.5"/TYPE 2 (3/4")	12"	0"

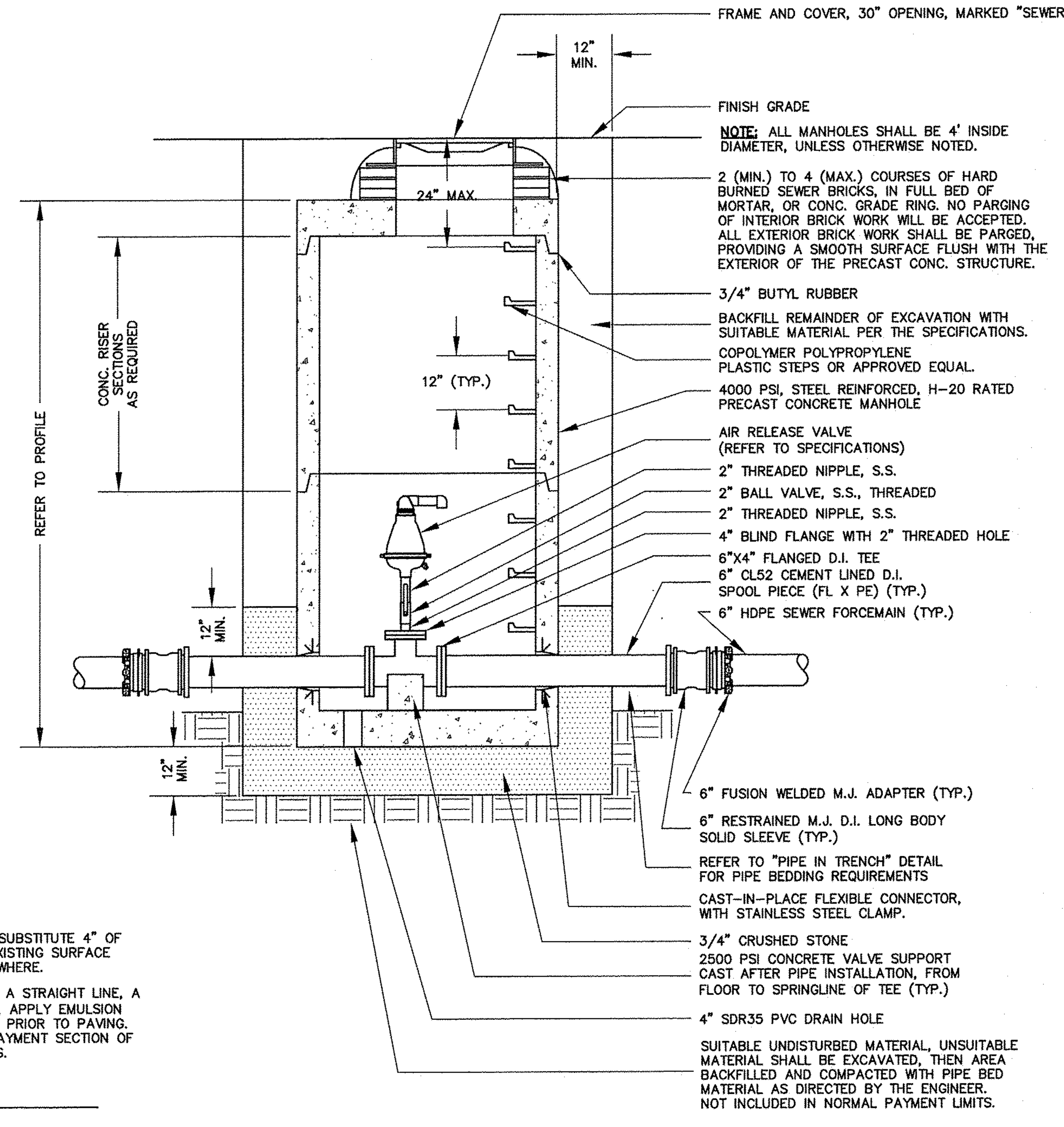

AUTOMATIC SEWER AIR RELEASE MANHOLE DETAIL

NOT TO SCALE

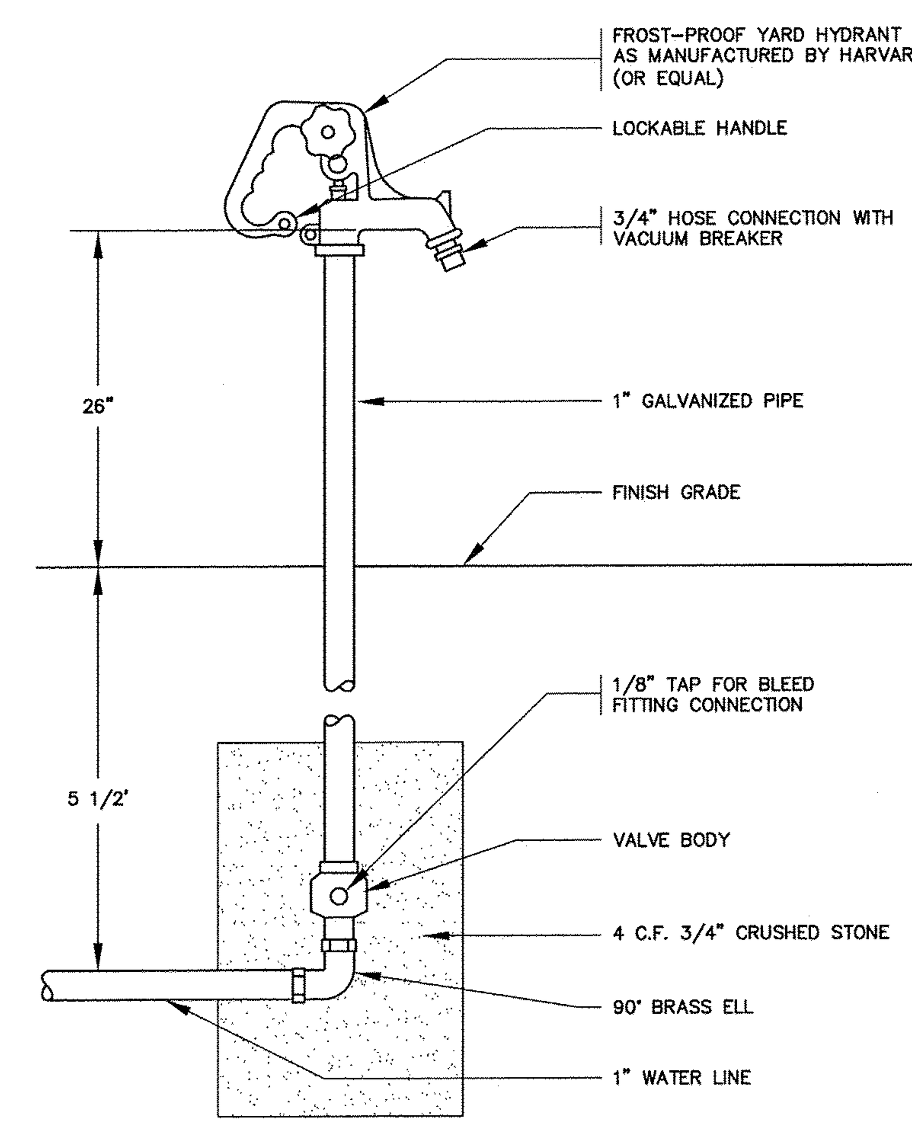

YARD HYDRANT DETAIL

NOT TO SCALE

OTTER CREEK
ENGINEERING
404 East Main Street
P.O. Box 712
East Middlebury, VT 05740
Telephone: 802 382-8522
Fax: 802 382-8640
~
110 Merchants Row
4th Floor, Suite 15
Rutland, VT 05701
Telephone: 802 747-3080
Fax: 802 747-4820
~
E-mail: info@ottercrk.com

STAMP AND SIGNATURE:
STATE OF VERMONT
CARL CRAWFORD
No. 7014
CIVIL
LICENSED
PROFESSIONAL ENGINEER

DESIGN ENGINEER

THESE DRAWINGS SHALL NOT BE ALTERED IN ANY WAY WITHOUT THE WRITTEN APPROVAL OF THE ENGINEER. ANY REVISIONS SHALL BE MADE BY THE ENGINEER AND NOTED IN THE REVISION BLOCK. © 2015
OTTER CREEK ENGINEERING, INC.

TOWN OF WEST RUTLAND

ROUTE 4 WATER AND SEWER EXTENSIONS

CENTER RUTLAND, VERMONT

PERMITTING

DATE ISSUED: 4/17/15
REVISIONS:

DRAWN BY: HB
CHECKED BY: CC
SCALE: SHOWN
PROJECT NO.: 168-017
CADD FILE: 168-017 DETAILS
TITLE:
NOTES AND DETAILS

DRAWING NO.
C-11

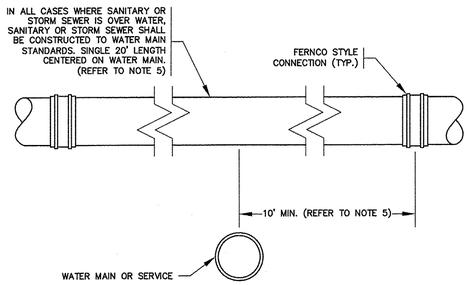

WATER / SEWER CROSSING DETAIL

NOT TO SCALE

1. WATER MAINS CROSSING OVER SEWER MAINS OR SERVICES SHALL HAVE A MINIMUM VERTICAL CLEARANCE OF 18 INCHES.

2. WATER AND SEWER PIPE JOINTS SHALL BE LOCATED AS FAR APART AS POSSIBLE.

3. PROVIDE STRUCTURAL SUPPORT FOR EXPOSED WATER AND SEWER PIPES.

4. FOR PARALLEL INSTALLATION, THERE SHALL BE A HORIZONTAL SEPARATION OF 10 FEET BETWEEN WATER MAINS AND SANITARY SEWER, AND A SEPARATION OF 5 FT BETWEEN WATER MAINS AND STORM SEWERS. (NOTE: THIS PROJECT HAS PERMITTED EXCEPTION FOR AREAS OF FUSION WELDED PIPE. REFER TO PIPE IN TRENCH DETAIL FOR SEPARATION REQUIREMENTS.)

5. IN THE EVENT 18 INCHES OF VERTICAL CLEARANCE (WATER OVER SEWER) OR 10' OF HORIZONTAL SEPARATION CANNOT BE ACHIEVED OR IN ALL CASES WHERE SEWER IS OVER WATER (REGARDLESS OF VERTICAL SEPARATION), THE SANITARY SEWER PIPE MUST BE CONSTRUCTED TO WATER MAIN STANDARDS (CL52 D.I. OR C-900 PVC) FOR A MINIMUM OF 10 FEET IN EACH DIRECTION AS MEASURED PERPENDICULAR TO THE WATER MAIN. CONNECTIONS AT EACH END SHALL BE MADE WITH "FERNCO" STYLE COUPLINGS.

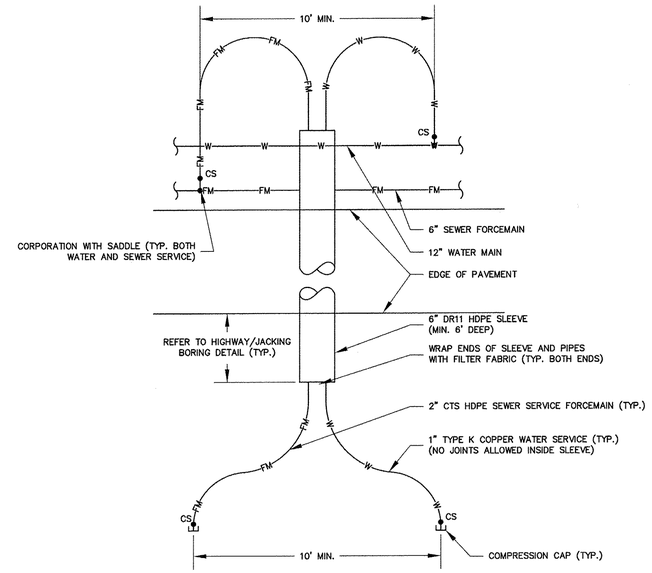

NOTES:
1. IN LOCATIONS WHERE THE WATER MAIN AND SEWER FORCEMAIN ARE TOO CLOSE TO EDGE OF PAVEMENT, SERVICES SHALL EXTEND BEYOND MAINS. REFER TO HIGHWAY JACKING/BORING DETAIL.

2. REFER TO WATER/SEWER SERVICE DETAIL.

3. UNLESS OTHERWISE SHOWN, ALL WATER SERVICES SHALL BE 1" TYPE K COPPER AND ALL SEWER SERVICES SHALL BE 2" CTS HDPE (200 PSI) PIPING.

4. AFTER PRESSURE TESTING, CHLORINATION AND BACTERIOLOGICAL TESTING, WATER AND SEWER SERVICE CURB STOPS NEAR MAINS SHALL BE CLOSED, SERVICE DRAINED AND CAPS RESET.

5. PROVIDE ALL COMPRESSION FITTINGS AND BENDS AS REQUIRED.

SERVICE CROSSING DETAIL (TYPE 1)

NOT TO SCALE

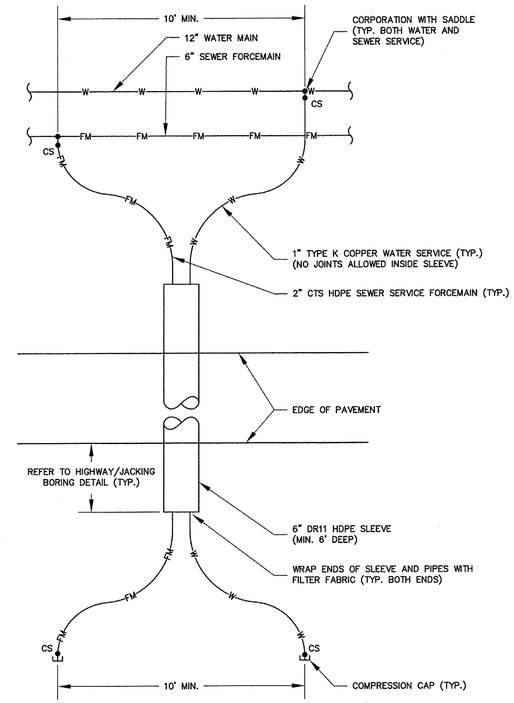

NOTES:
1. REFER TO WATER/SEWER SERVICE DETAIL.

2. UNLESS OTHERWISE SHOWN, ALL WATER SERVICES SHALL BE 1" TYPE K COPPER AND ALL SEWER SERVICES SHALL BE 2" CTS HDPE (200 PSI) PIPING.

3. AFTER PRESSURE TESTING, CHLORINATION AND BACTERIOLOGICAL TESTING, WATER AND SEWER SERVICE CURB STOPS NEAR MAINS SHALL BE CLOSED, SERVICE DRAINED AND CAPS RESET.

4. PROVIDE ALL COMPRESSION FITTINGS AND BENDS AS REQUIRED.

SERVICE CROSSING DETAIL (TYPE 2)

NOT TO SCALE

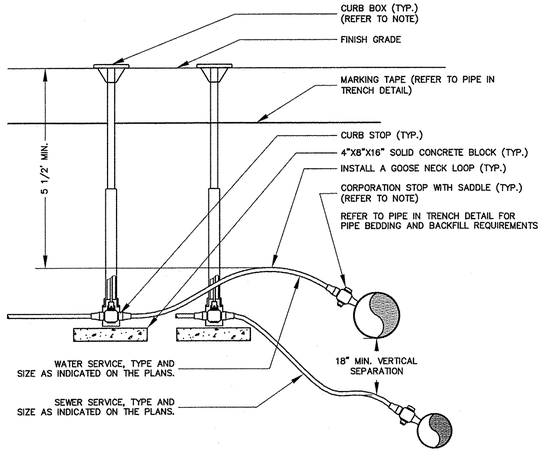

NOTES:
1. SADDLES SHALL BE USED WHEN TAPPING ANY MAIN OTHER THAN CL 52 DUCTILE IRON, AND WHEN THE NOMINAL SIZE ON THE CORPORATION IS GREATER THAN 1/5 THE NOMINAL DIAMETER OF THE MAIN.

2. CURB BOXES SHALL BE SET AS FOLLOWS:
   A. WHEN IN PAVED OR CONCRETE SURFACE, THE CURB BOX SHALL BE INSTALLED FLUSH TO FINISH GRADE.
   B. WHEN IN GRAVEL SURFACE, THE CURB BOX SHALL BE BURIED 2".
   C. WHEN IN A LAWN OR OTHER MOWED AREA, CURB BOX SHALL BE INSTALLED 1/2" ABOVE FINISH GRADE.
   D. WHEN IN A FIELD OR WOODS, THE CURB STOP SHALL BE INSTALLED 1/2" ABOVE FINISH GRADE AND MARKED WITH A STEEL FENCE POST.

3. WHEN SERVICE IS BEING INSTALLED AT A DEPTH LESS THAN 5 1/2 FEET, IT SHALL BE INSULATED AS SHOWN ON THE PIPE IN TRENCH DETAIL.

4. CORPORATIONS, CURB STOPS AND CURB BOXES SHALL COMPLY WITH THE MUNICIPALITY'S STANDARDS.

5. CURB STOP AND CURB BOX SHALL REST ON THE CONCRETE BLOCK.

6. CURB BOX SHALL BE SET PLUMB AND CENTERED ON THE CURB STOP.

7. CURB BOX SHALL BE LOCATED AT THE RIGHT OF WAY, OR AS SHOWN ON THE PLANS, OR AS DIRECTED BY THE ENGINEER.

8. THE CONTRACTOR SHALL PROVIDE THE ENGINEER WITH A MINIMUM OF THREE SWING TIES FOR EACH OF THE FOLLOWING: CORPORATION, CURB STOP, END OF SERVICE AND ANY OTHER FITTINGS OR BENDS INCORPORATED INTO THE SERVICE.

9. WHEN A SERVICE IS NOT GOING TO BE CONNECTED TO THE CURB STOP BY THE CONTRACTOR, AS DIRECTED BY ENGINEER INSTALL A STUB PIECE OUT OF THE CURB STOP. IF THE STUB PIECE IS LESS THAN 1 FOOT, THE CONTRACTOR SHALL CRIMP THE END TO PREVENT DIRT FROM ENTERING THE CURB STOP. IF THE STUB PIECE IS TO BE GREATER THAN 1 FOOT, THEN THE CONTRACTOR SHALL INSTALL A COMPRESSION STYLE CAP AT THE END OF THE SERVICE.

WATER/SEWER SERVICE DETAIL

NOT TO SCALE

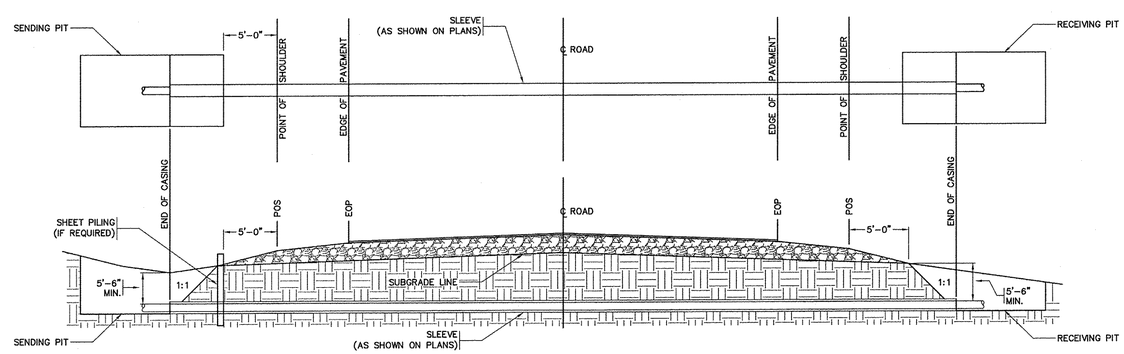

HIGHWAY DIRECTIONAL DRILLING DETAIL

NOT TO SCALE

NOTES:
1. SHEET PILING MAY BE DRIVEN VERTICALLY FIVE (5) FEET OUTSIDE THE SHOULDER POINT, TO ALLOW FOR A SHORTER SLEEVE.

2. EARTH BACKFILL TO BE MADE IN SIX (6) INCH LIFTS AND COMPACTED TO NOT LESS THAN 95% MAXIMUM DRY DENSITY.

3. SEE PLANS FOR DETERMINING SLEEVE LENGTH.

4. IN THE EVENT THAT PERMISSION IS GRANTED TO CUT ANY EXISTING BITUMINOUS PAVEMENT, ALL CUTS, IF POSSIBLE, SHALL BE MADE WITH A SAW TO A MINIMUM DEPTH OF 1 1/2".

5. BITUMINOUS PAVEMENTS TO BE REPLACED WITH BITUMINOUS CONCRETE. SUBBASE TO BE REPLACED IN KIND. MATERIAL BELOW SUBGRADE TO BE REPLACED WITH EXCAVATED MATERIAL OR AS DIRECTED BY THE HIGHWAY ENGINEER.

6. SUBBASE TO BE REPLACED IN SIX (6) INCH COMPACTED LAYERS.

OTTER CREEK ENGINEERING

404 East Main Street
P.O. Box 712
East Middlebury, VT 05740
Telephone: 802 382-8522
Fax: 802 382-8640

110 Merchants Row
4th Floor, Suite 15
Rutland, VT 05701
Telephone: 802 747-3080
Fax: 802 747-4820

E-mail: info@ottercrk.com

STAMP AND SIGNATURE:

STATE OF VERMONT
CARL CRAWFORD
No. 7074
CIVIL
LICENSED
PROFESSIONAL ENGINEER

DESIGN ENGINEER

THESE DRAWINGS SHALL NOT BE ALTERED IN ANY WAY WITHOUT THE WRITTEN APPROVAL OF THE ENGINEER. ANY REVISIONS SHALL BE MADE BY THE ENGINEER AND NOTED IN THE REVISION BLOCK. © 2015

OTTER CREEK ENGINEERING, INC.

TOWN OF WEST RUTLAND

ROUTE 4 WATER AND SEWER EXTENSIONS
CENTER RUTLAND, VERMONT

PERMITTING

DATE ISSUED:	4/17/15
REVISIONS:	
DRAWN BY:	HB
CHECKED BY:	CC
SCALE:	SHOWN
PROJECT NO.:	168-017
CADD FILE:	168-017 DETAILS

TITLE: NOTES AND DETAILS

DRAWING NO.

C-12

SAFETY NOTES

1. CONTRACTOR SHALL BE RESPONSIBLE FOR INITIATING, MAINTAINING AND SUPERVISING ALL WORK SAFETY PRECAUTIONS AND PROGRAMS IN CONNECTION WITH THE WORK. CONTRACTOR SHALL TAKE ALL NECESSARY PRECAUTIONS TO PREVENT DAMAGE, INJURY OR LOSS TO:

   A. ALL EMPLOYEES ON THE WORK SITE AND OTHER PERSONS WHO MAY BE AFFECTED.

   B. THE WORK SITE AND ALL THE MATERIALS AND EQUIPMENT TO BE INCORPORATED WHETHER IN STORAGE ON OR OFF THE SITE.

   C. OTHER PROPERTY AT THE SITE OR ADJACENT, INCLUDING BUT NOT LIMITED TO TREES, SHRUBS, LAWNS, WALKS, PAVEMENTS, ROADWAYS, STRUCTURES AND UTILITIES NOT DESIGNATED FOR REMOVAL, RELOCATION, OR REPLACEMENT IN THE COURSE OF CONSTRUCTION.

2. CONTRACTOR SHALL COMPLY WITH ALL APPLICABLE LAWS, ORDINANCES, RULES, REGULATIONS AND ORDERS (INCLUDING O.S.H.A. REGULATIONS) OF ANY PUBLIC BODY HAVING JURISDICTION OVER THE SAFETY OF PERSONS OR PROPERTY.

3. THE CONTRACTOR SHALL NOTIFY OWNERS OF ADJACENT PROPERTY AND UTILITIES WHEN EXECUTION OF THE WORK WILL AFFECT THEM.

4. THE CONTRACTOR'S DUTIES AND RESPONSIBILITIES FOR THE SAFETY AND PROTECTION OF THE WORK SHALL CONTINUE UNTIL SUCH TIME AS ALL THE WORK IS COMPLETED.

5. THE LOCATION OF EXISTING UNDERGROUND UTILITIES ARE SHOWN IN AN APPROXIMATE WAY ONLY AND HAVE NOT BEEN INDEPENDENTLY VERIFIED BY THE OWNER OR ITS REPRESENTATIVE. THE CONTRACTOR SHALL DETERMINE THE EXACT LOCATION OF ALL EXISTING UTILITIES BEFORE COMMENCING WORK, AND AGREES TO BE FULLY RESPONSIBLE FOR ANY AND ALL DAMAGES WHICH OCCUR BY THE CONTRACTOR'S FAILURE TO EXACTLY LOCATE AND PRESERVE ANY AND ALL UNDERGROUND UTILITIES.

6. CONTRACTOR SHALL COORDINATE WITH DIG–SAFE (888)–344–7233 OR WWW.DIGSAFE.COM A MINIMUM OF 48 HOURS PRIOR TO PERFORMING ANY EXCAVATION.

7. AT THE CLOSE OF EACH WORK DAY, THE CONTRACTOR SHALL BACKFILL OR ADEQUATELY BARRICADE ALL OPEN TRENCHES.

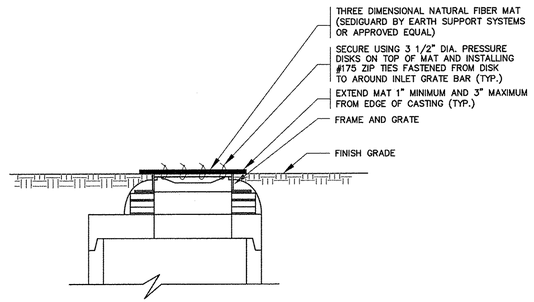

TEMPORARY CATCH BASIN INLET FILTER DETAIL

NOT TO SCALE

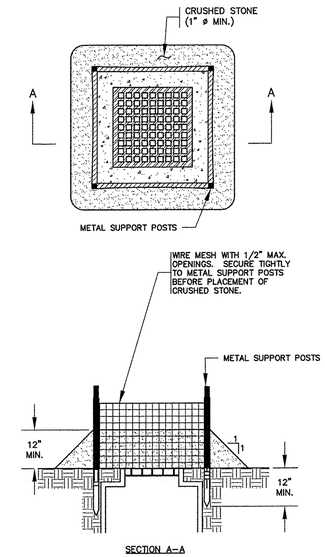

ROCK BARRIER CATCH BASIN INLET PROTECTION DETAIL (UNPAVED AREAS)

NOT TO SCALE

EROSION CONTROL NOTES

1. THIS PROJECT IS SUBJECT TO THE STATE OF VERMONT'S CONSTRUCTION GENERAL PERMIT 3–9020, AS REQUIRED. THE CONTRACTOR SHALL APPLY FOR COVERAGE AS A CO–PERMITTEE, PRIOR TO THE START OF CONSTRUCTION.

2. THE CONTRACTOR IS RESPONSIBLE FOR EROSION PREVENTION AND SEDIMENT CONTROL FOR THIS PROJECT. ANY FINES ASSESSED BY REGULATORY AGENCIES FOR THE NONCOMPLIANCE WITH STATE WATER QUALITY STANDARDS SHALL BE THE RESPONSIBILITY OF THE CONTRACTOR. THE CONTRACTOR IS RESPONSIBLE FOR PROVIDING THE ON–SITE COORDINATOR REQUIRED BY GENERAL PERMIT 3–9020.

3. THE ON–SITE COORDINATOR SHALL HAVE THE AUTHORITY TO STOP AND/OR MODIFY CONSTRUCTION ACTIVITIES AS NECESSARY TO COMPLY WITH THE TERMS AND CONDITIONS OF THE PERMIT AND SHALL BE RESPONSIBLE FOR INSPECTIONS AND RECORD KEEPING.

4. THE EROSION PREVENTION AND SEDIMENT CONTROL MEASURES SHOWN ON THE PLANS DO NOT RELIEVE THE CONTRACTOR'S RESPONSIBILITY TO OBSERVE, EVALUATE AND CONSIDER ALTERNATIVES AND TO PROPOSE APPROPRIATE RECOMMENDATIONS IN ORDER TO LIMIT POTENTIAL WATER QUALITY IMPACTS.

5. ANY MAJOR CHANGES PROPOSED BY THE CONTRACTOR MUST BE APPROVED BY THE STATE OF VERMONT, AGENCY OF NATURAL RESOURCES, AND DEPARTMENT OF ENVIRONMENTAL CONSERVATION. THE CONTRACTOR IS RESPONSIBLE FOR ALL COST, AMENDMENT APPLICATIONS AND SUPPORTING MATERIAL NECESSARY AND SCHEDULE IMPACTS ASSOCIATED WITH THE MAJOR CHANGES.

6. EROSION PREVENTION AND SEDIMENT SHALL BE MONITORED AND MAINTAINED THROUGHOUT CONSTRUCTION AND REMOVED AFTER PROJECT AREA AND DRAINAGE COURSES ARE FULLY ESTABLISHED AND STABLE.

7. ALL DISTURBED AREAS NOT UNDER ACTIVE CONSTRUCTION SHALL BE STABILIZED BY ROUGH GRADING TO MINIMIZE SLOPES AND MULCHED. FOLLOWING FINAL GRADING OF ANY PORTION OF THE SITE, CONTRACTOR SHALL LOAM, SEED AND MULCH WITHIN ONE WEEK.

8. REFER TO CONTRACT SPECIFICATIONS, DETAILS AND GENERAL PERMIT FOR ADDITIONAL INFORMATION.

9. THE CONTRACTOR SHALL INSTALL INLET PROTECTION ON ALL CATCH BASINS WITHIN 100 FEET DOWN GRADIENT OF THE ACTIVELY WORKED CONSTRUCTION AREA. INLET PROTECTION BEST MANAGEMENT PRACTICES SHALL BE INSTALLED PRIOR TO THE START OF WORK AND IN ACCORDANCE WITH MANUFACTURER'S RECOMMENDATIONS.

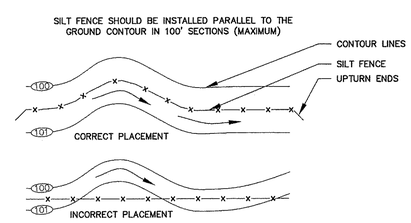

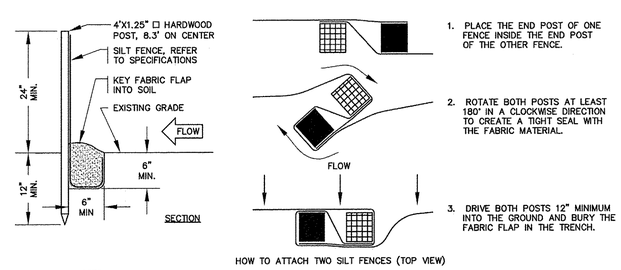

HOW TO ATTACH TWO SILT FENCES (TOP VIEW)

NOTES:
1. SILT FENCE SHALL BE INSTALLED AT THE DOWNHILL SIDE OF CONSTRUCTION ACTIVITIES BEFORE UPSLOPE LAND DISTURBANCE BEGINS.

2. REFER TO TECHNICAL SPECIFICATIONS FOR ADDITIONAL INFORMATION.

SILT FENCE DETAIL

NOT TO SCALE

OTTER CREEK ENGINEERING

404 East Main Street
P.O. Box 712
East Middlebury, VT 05740
Telephone: 802 382-8522
Fax: 802 382-8440
~
110 Merchants Row
4th Floor, Suite 15
Rutland, VT 05701
Telephone: 802 747-3080
Fax: 802 747-4820
~
E-mail: info@ottercrk.com

STAMP AND SIGNATURE:

STATE OF VERMONT
CARL CRAGIN
No. 7094
CIVIL
LICENSED
PROFESSIONAL ENGINEER

DESIGN ENGINEER

THESE DRAWINGS SHALL NOT BE ALTERED IN ANY WAY WITHOUT THE WRITTEN APPROVAL OF THE ENGINEER. ANY REVISIONS SHALL BE MADE BY THE ENGINEER AND NOTED IN THE REVISION BLOCK. © 2015

OTTER CREEK ENGINEERING, INC.

TOWN OF WEST RUTLAND

ROUTE 4 WATER AND SEWER EXTENSIONS

CENTER RUTLAND, VERMONT

PERMITTING

DATE ISSUED:	4/17/15
REVISIONS:	
DRAWN BY:	HB
CHECKED BY:	CC
SCALE:	SHOWN
PROJECT NO.:	168-017
CADD FILE:	168-017 DETAILS

TITLE:
NOTES AND DETAILS

DRAWING NO.
C-13

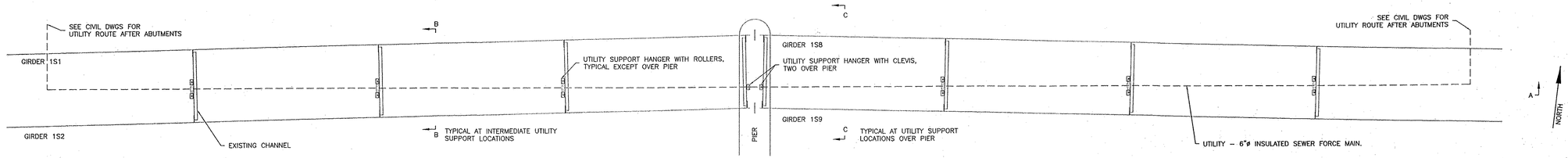

PLAN VIEW GIRDER 1S1, 1S2, 1S8 AND 1S9 – OUTSIDE BAY, NORTH SIDE – OTTER CREEK BRIDGE

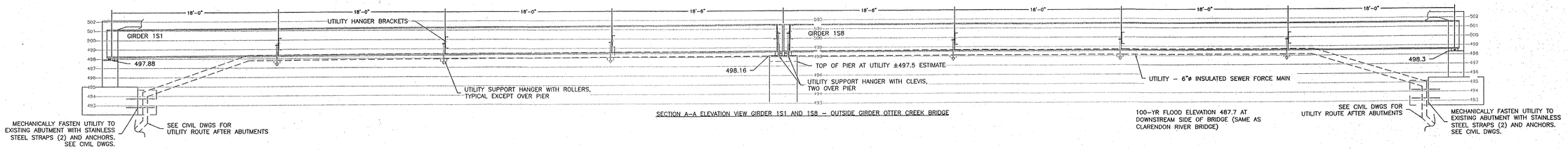

SECTION A–A ELEVATION VIEW GIRDER 1S1 AND 1S8 – OUTSIDE GIRDER OTTER CREEK BRIDGE

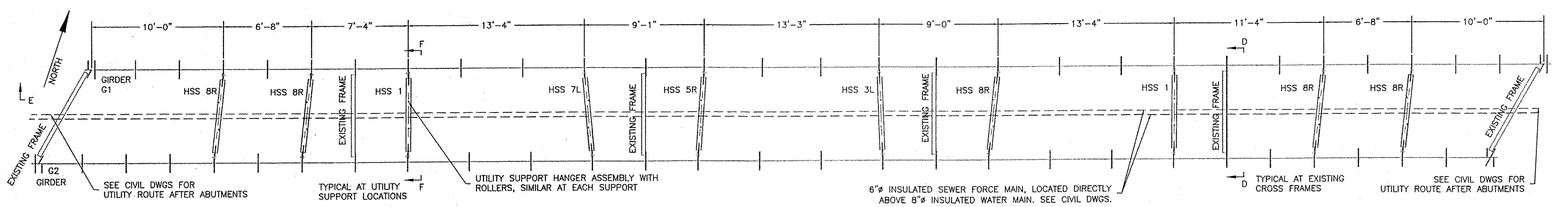

PLAN VIEW GIRDER G1 AND G2 – OUTSIDE BAY, NORTH SIDE – CLARENDON RIVER BRIDGE

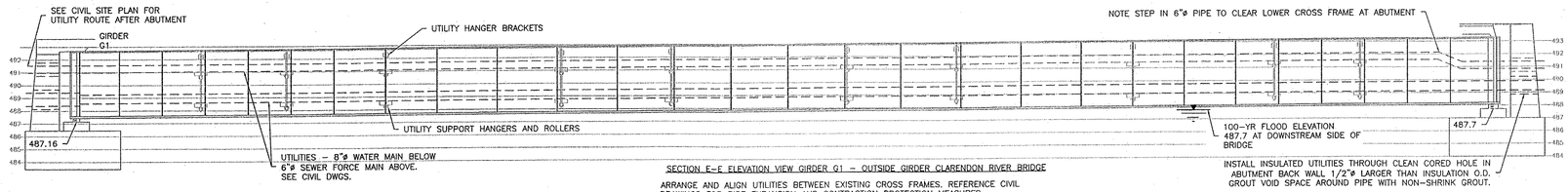

SECTION E–E ELEVATION VIEW GIRDER G1 – OUTSIDE GIRDER CLARENDON RIVER BRIDGE

ARRANGE AND ALIGN UTILITIES BETWEEN EXISTING CROSS FRAMES. REFERENCE CIVIL DRAWINGS FOR PIPE EXPANSION AND CONTRACTION PROTECTION MEASURES

S – SPACING BETWEEN STIFFENERS PRESUMED FROM PLANS, FIELD MEASURE

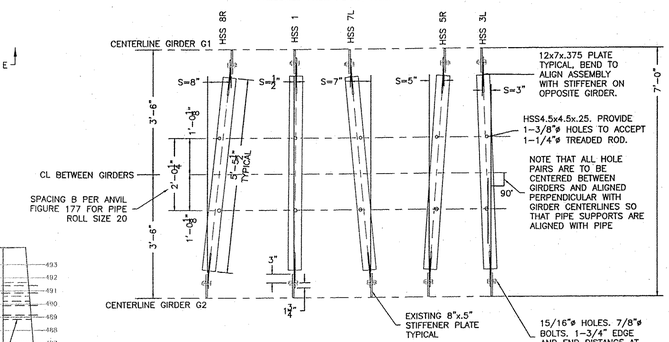

PIPE SUPPORT ASSEMBLIES FOR CLARENDON RIVER BRIDGE
FIELD MEASURE AND BEND PLATES PRIOR TO GALVANIZING.
NO HORIZONTAL SCALE, SEE PLAN VIEW FOR SUPPORT BRACKET LOCATIONS.
SEE SECTION F–F FOR ADDITIONAL DETAILS.

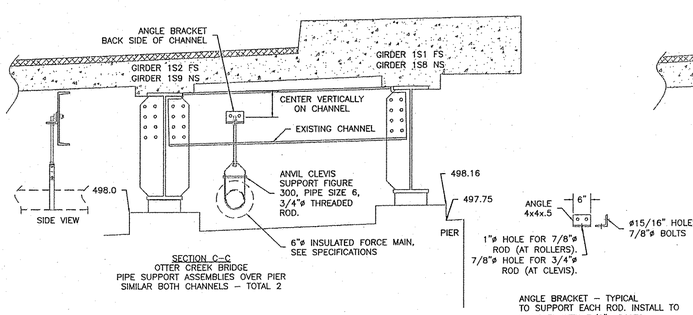

SECTION C–C
OTTER CREEK BRIDGE
PIPE SUPPORT ASSEMBLIES OVER PIER
SIMILAR BOTH CHANNELS – TOTAL 2

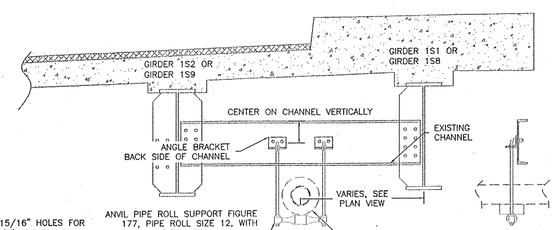

SECTION B–B
OTTER CREEK BRIDGE
PIPE SUPPORT ASSEMBLIES AT INTERMEDIATE LOCATIONS

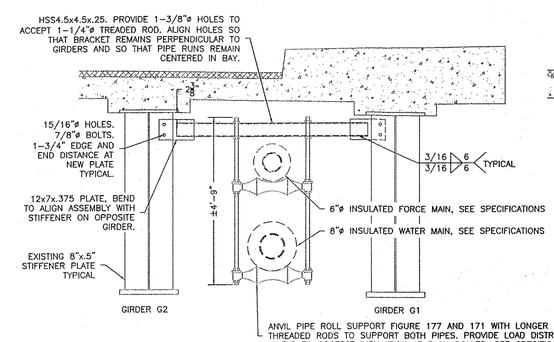

SECTION F–F
CLARENDON RIVER BRIDGE
UTILITY SUPPORT ASSEMBLIES
CONTRACTOR TO CONFIRM THAT THE PIPE ROLL SIZES ARE COMPATIBLE WITH THE PIPE INSULATION MATERIAL AND LOAD DISTRIBUTION SHIELDS CALLED OUT BY THE PROJECT SPECIFICATIONS.

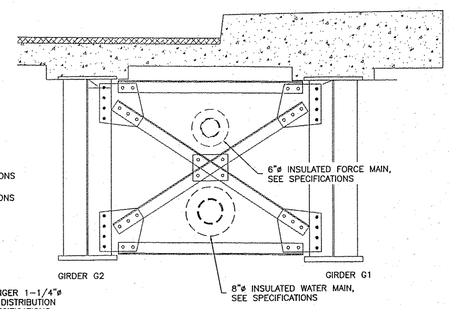

SECTION D–D
CLARENDON RIVER BRIDGE
PIPE LOCATIONS AT EXISTING INTERIOR CROSS BRACING, ADJUST SO THAT PIPES DO NOT LAY ON EXISTING INTERIOR CROSS FRAMES AND SO THAT PIPES CLEAR CROSS FRAMES AT ABUTMENT.

GENERAL NOTES:
FIELD CLEAN, PRIME AND PAINT NEW DRILLED HOLES BEFORE INSTALLING HANGERS.
ALL NEW MATERIAL TO BE HOT DIPPED GALVANIZED AFTER FABRICATION.
BOLTS GALVANIZED ASTM A325 7/8" DIAMETER WITH A563 NUTS AND F436 WASHERS. PRETENTION BY TURN OF THE NUT METHOD.
BRIDGE CAMBER IS NOT SHOWN, ADJUST SUPPORT ELEVATIONS AS NECESSARY TO ACCOMMODATE CAMBER.
NEW UTILITIES TO BE SUFFICIENTLY CONNECTED TO EXISTING ABUTMENTS SO THAT THEY CANNOT MOVE DOWNWARD OR EXERT LONGITUDINAL FORCE ON BRIDGE. SEE CIVIL DRAWINGS FOR NECESSARY DETAILS.
NEW UTILITIES TO HAVE SUFFICIENT JOINTS AND CONNECTIONS TO RESTRAIN INTERNAL FORCES AND TO RESOLVE EXPANSION AND CONTRACTION FORCES. SEE CIVIL DRAWINGS FOR NECESSARY DETAILS.
DIMENSIONS AND ELEVATIONS SHOWN ARE APPROXIMATE AND INTENDED FOR RELATIVE REFERENCE OF THE PROPOSED WORK. FIELD MEASURE AND ADJUST AS NECESSARY.
PIPE JOINTS TO BE LOCATED WITHIN 3 FEET OF A HANGER SUPPORT AND AT LEAST ONE HANGER IS TO BE PROVIDED PER PIPE SECTION.

REFERENCE SCALE OF ORIGINAL PAPER: 0" 1" 2" 3" 4"

PLAN AND PROFILE SCALE 3/16"=1'-0": 0' 5' 10' 15' 20'

DETAIL SCALE 1/2"=1'-0": 0" 12" 24" 36" 48"

404 East Main Street
P.O. Box 712
East Middlebury, VT 05740
Telephone: 802 382-8522
Fax: 802 382-8640

110 Merchants Row
4th Floor, Suite 15
Rutland, VT 05701
Telephone: 802 747-3080
Fax: 802 747-4820

E-mail: info@ottercrk.com

Project Partner:
HERITAGE ENGINEERING
Heritage Engineering, P.C.
P.O. Box 255
7290 VT Route 131, Suite 4A
Perkinsville, VT 05151
Ph/Fax (802) 263-5400
heritageengineering@fds.net
www.heritageengineeringvt.com

STAMP AND SIGNATURE:
STATE OF VERMONT, DAVID T. HIGGINS, 04/24/15, NO. 8928, STRUCTURAL I, LICENSED PROFESSIONAL ENGINEER

DESIGN ENGINEER

THESE DRAWINGS SHALL NOT BE ALTERED IN ANY WAY WITHOUT THE WRITTEN APPROVAL OF THE ENGINEER. ANY REVISIONS SHALL BE MADE BY THE ENGINEER AND NOTED IN THE REVISION BLOCK. © 2015
OTTER CREEK ENGINEERING, INC.

TOWN OF WEST RUTLAND

ROUTE 4 WATER AND SEWER EXTENSIONS
CENTER RUTLAND, VERMONT

PERMITTING

DATE ISSUED:	4/27/15
REVISIONS:	
DRAWN BY:	DTH
CHECKED BY:	DTH
SCALE:	AS NOTED
PROJECT NO.:	168-017
CADD FILE:	

TITLE:
PROPOSED UTILITY CONNECTIONS TO EXISTING BRIDGES

DRAWING NO.
S-1