VERMONT

State of Vermont
Policy, Planning & Intermodal Development Division
Policy, Planning and Research Bureau
Development Review & Permitting Services Section
One National Life Drive [phone] 802-828-2653
Montpelier, VT 05633-5001 [fax] 802-828-2456
vtrans.vermont.gov [ttd] 800-253-0191

Agency of Transportation

November 2, 2015

Towns of Troy & Jay Sewer Commission
Marc Burrough-Biron
1036 VT Route 242
Jay, VT 05859

Subject: Jay, VT242, L.S. 47+55 and Troy, VT242, L.S. 16+78 LT/RT; and Troy, VT010, L.S. 132+00 ~ 165+74 LT/RT **Permit Revision #5**

Dear Mr. Burrough-Biron:

This permit is revised to incorporate a change in the project plans to allow for the new force main connected to Bridge #10, at approximate station 145+00 ~ 144+00 (south side of VT242), to be placed on a separate structure, a utility bridge, within the state highway right-of-way.

Previously this new force main was going outside the state highway right-of-way, and designed that way; but due to property owner issues it is now within the right-of-way and attached to the bridge. This change was agreed to by VTrans at an October 10, 2013 meeting but a revision for this change was never made. The approved change is shown on the attached plans.

This permit revision letter becomes a part of the originally issued permit and should be attached to your copy.

This work must be completed under the same conditions as set forth in the original permit (permit #38120).

Please contact me at (802) 828-2486 if you have any questions.

Sincerely,

James C. Clancy

James Clancy
Permit Coordinator
Permitting Services

Enclosures

cc: District Transportation Office #9
Gary Leach, P.E., Tata and Howard, Inc.
Wendy Pelletier, Structures
Larry Wheeler, Structures

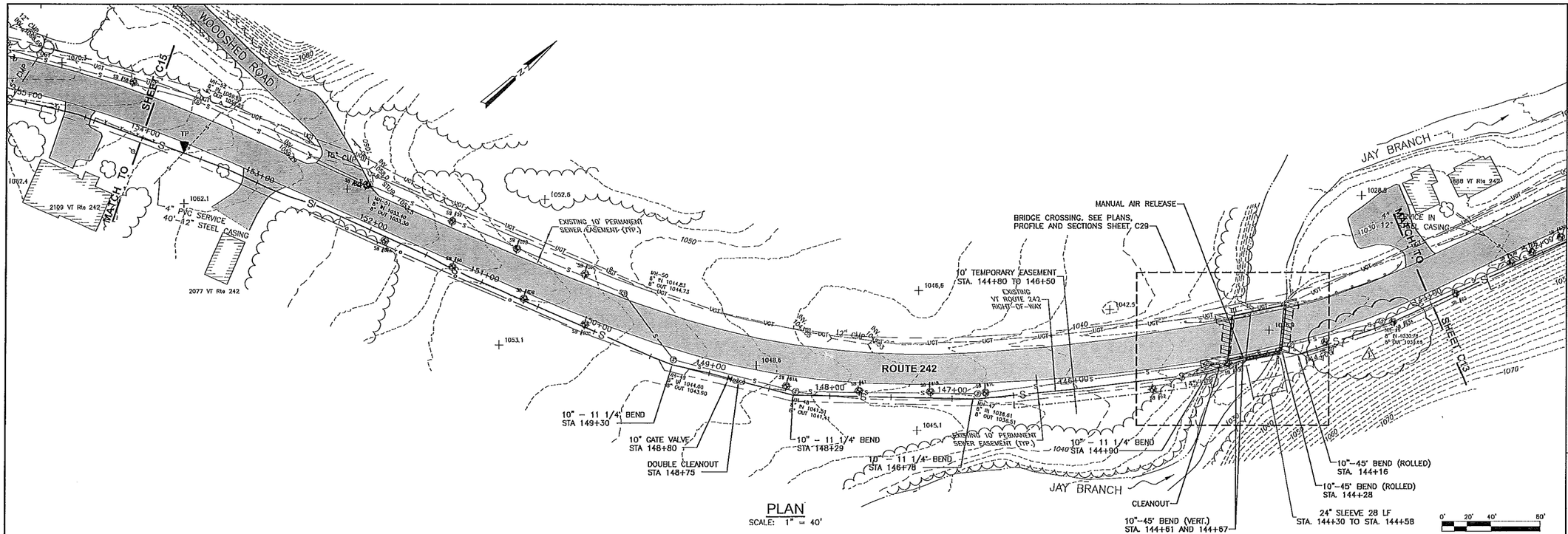

PLAN
SCALE: 1" = 40'

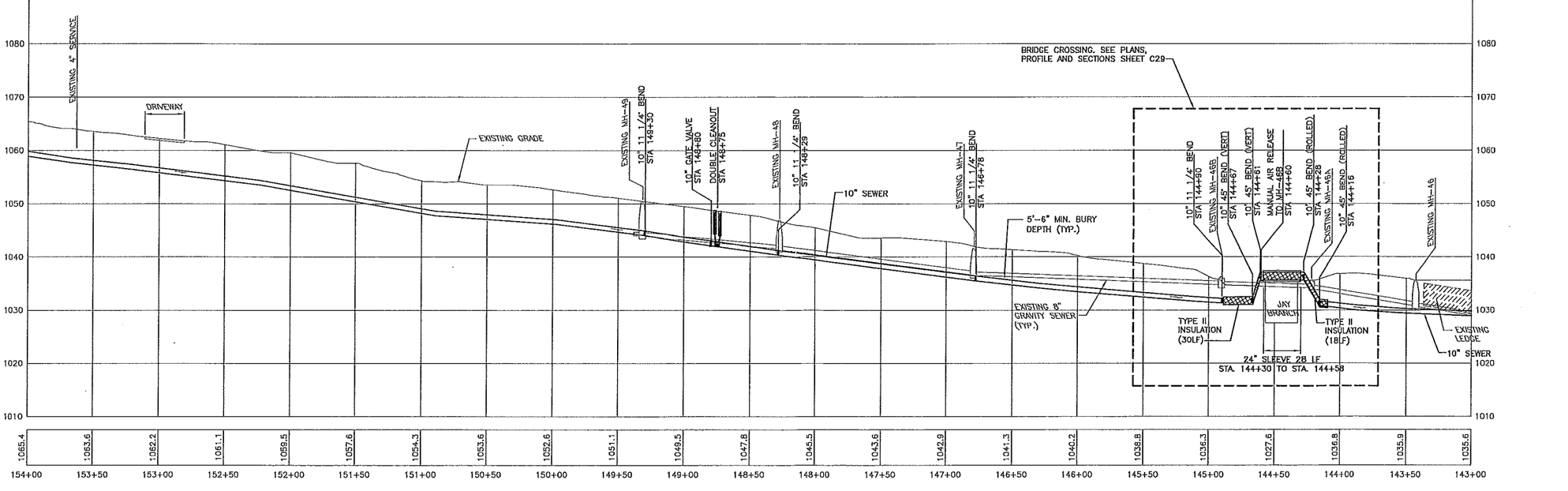

PROFILE
HORIZONTAL SCALE: 1" = 40'
VERTICAL SCALE: 1" = 10'

TOWNS OF TROY AND AND JAY VERMONT

WASTEWATER COLLECTION SYSTEM (CONTRACT #4)

PLAN AND PROFILE STA 143+00 TO 154+00

Rev.	Date	Description
1	4/20/14	Removed Air Release MH & GV
D	11/15/14	FOR BID
C	7/3/13	FOR REVIEW
B	2/8/13	FOR APPROVAL
A	5/11/12	90% PERMIT REVIEW SET

Drawn By: DPB | Designed By: | Checked By: AKT | Approved By: GAL

THIS DOCUMENT IS THE PROPERTY OF TATA & HOWARD, INC. AND ITS CLIENT. REPRODUCTION OR MODIFICATION WITHOUT WRITTEN CONSENT IS PROHIBITED.

STATE OF VERMONT
GARY A. LEVER
No. 4299
REGISTERED PROFESSIONAL ENGINEER

TATA & HOWARD

T&H NO.: 3452
DATE: 01-07-2014
SCALE: AS NOTED

C14

S:\Projects\TAW SWR CAD and GIS\CAD\SCD\CivTV\WWSR 04_011-15.dwg, 4/21/2014 5:10 PM, CHARLIE

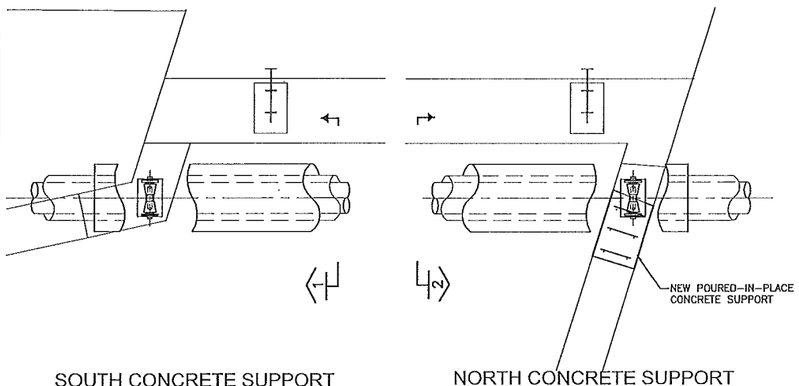

SOUTH CONCRETE SUPPORT PARTIAL PLAN
SCALE: 1/2" = 1'-0"

NORTH CONCRETE SUPPORT PARTIAL PLAN
SCALE: 1/2" = 1'-0"

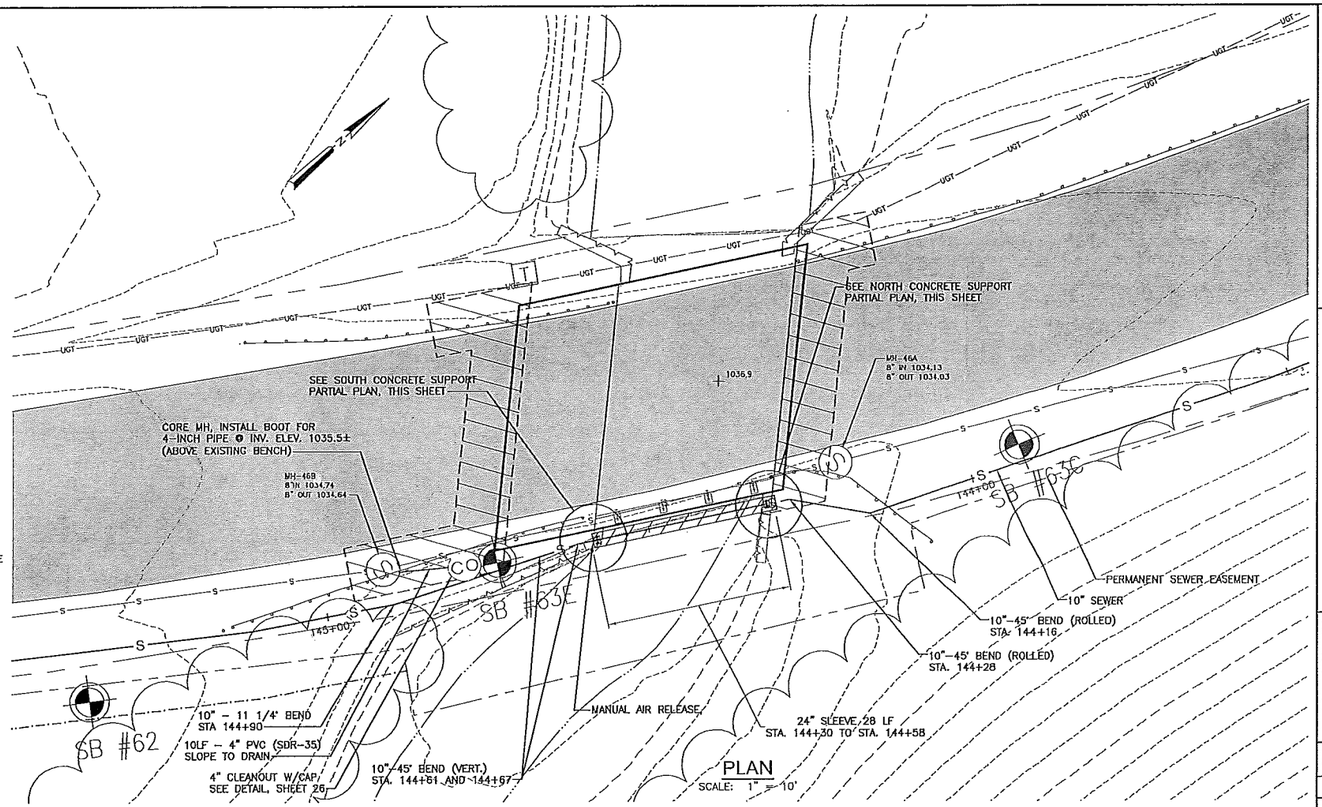

PLAN
SCALE: 1" = 10'

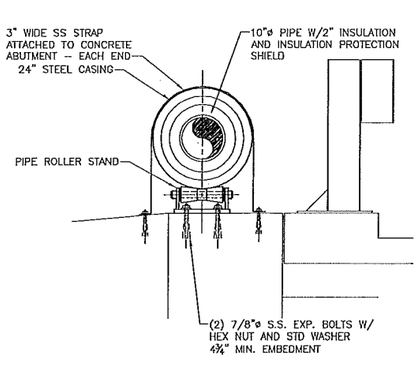

SECTION 1
SCALE: 3/4" = 1'-0"

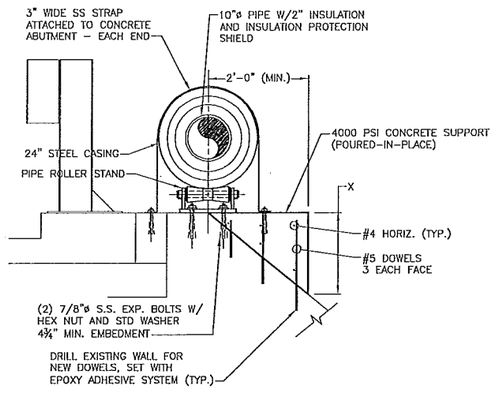

SECTION 2
SCALE: 3/4" = 1'-0"

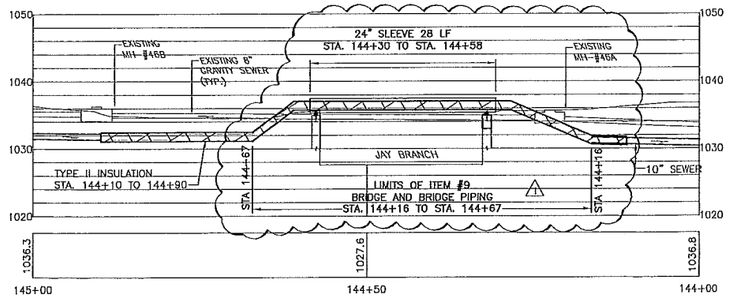

BRIDGE #10 CROSSING - PROFILE
HORIZONTAL SCALE: 1" = 10'
VERTICAL SCALE: 1" = 10'

TOWNS OF TROY AND AND JAY VERMONT
WASTEWATER COLLECTION SYSTEM (CONTRACT #4)

BRIDGE PLANS, PROFILE AND SECTIONS

Rev.	Date	Description
1	4/20/14	Limits of Bridge & Bridge Piping
D	3/15/14	FOR BID
C	7/3/13	FOR REVIEW
B	2/8/13	FOR APPROVAL
A	5/11/12	90% PERMIT REVIEW SET

Drawn By: CDM | Designed By: | Checked By: KIT | Approved By: GAL

THIS DOCUMENT IS THE PROPERTY OF TATA & HOWARD, INC. AND ITS CLIENT. REPRODUCTION OR MODIFICATION WITHOUT WRITTEN CONSENT IS PROHIBITED.

STATE OF VERMONT GARY ALAN LEACH No. 4299 PROFESSIONAL ENGINEER

TATA & HOWARD

T&H NO.: 3452
DATE: 01-07-2014
SCALE: AS NOTED

C29

S:\Projects\TJWW SWR C&S and C&A\CADD\Civil\TJWWSWR C4_C11-15.dwg 4/21/2014 5:21 PM CHARLIE