HERITAGE ENGINEERING

Heritage Engineering, P.C.
P.O. Box 255
Perkinsville, VT 05151
802-263-5400
heritageengineering@tds.net
www.heritageengineeringvt.com

Monday, April 27, 2015

Mark Youngstrom, P.E.
Otter Creek Engineering
110 Merchants Row
4th Floor, Suite 15
Rutland, VT 05701

Subject: Route 4 Water and Sewer Extensions, Proposed Utility Connections to Existing Bridges
Bridges B4-3 at Clarendon River and B4-4 at Otter Creek

The proposed water and sewer extension project along Route 4 includes the attachment of utilities to two bridges along Route 4. Heritage Engineering, P.C. has completed the design and drawings for the proposed methods by which the utilities may be connected to each of the two bridges if approved by Vtrans. A calculation and information package has been prepared to demonstrate the capacity of the proposed connections and also to demonstrate that the load rating for both of the bridges is preserved at an Inventory Level Rating Factor greater than 1 in all cases. Please forward this information on to the Vtrans Structures Division as part of your overall application to Vtrans for their use during the application, review and approval process.

The attached package includes:

- Drawing S-1 dated 04/27/15 – Proposed Utility Connections to Existing Bridges
- Calculation and Information Package:
  - Pages 1-10, Utility connection calculations and sketches
  - Pages 11-13, Manufacturer's Literature for components used in pipe support system
  - Page 14, Load and Resistance Factor Rating (LRFR) Summary Otter Creek Bridge
  - Pages 15-22, LRFR Otter Creek Interior and Exterior Girders - Details
  - Page 23, Load and Resistance Factor Rating Summary Clarendon River Bridge
  - Pages 24-31, LRFR Clarendon River Bridge - Details

STATE OF VERMONT
DAVID T. HINDINGER
04/27/15
NO. 8928
STRUCTURAL I
LICENSED
PROFESSIONAL ENGINEER

Sincerely,

David (Todd) Hindinger, P.E., S.E.

Weight of Utilities:

6" Ductile Iron pipe	= 21	lb/ft
Water / wastewater	= 12	lb/ft
Insulation / wrap	= 3	lb/ft
Hanger allowance	= 6	lb/ft
	42	lb/ft

12" Ductile Iron Pipe	= 48	lb/ft
Water	= 49	lb/ft
Insulation / wrap	= 6	lb/ft
Hanger allowance	= 10.4	lb/ft
	113.4	lb/ft

⇒ 04/27/15 See Note on page 10

Utilities Proposed on Otter Creek:

6" Ductile Iron, insulated Force Main

Roller: Maximum Hanger Spacing = 18 ft/2 + 14 ft = 23 ft
Abutment to first hanger plus half of distance to next hanger, longest span tributary to roller support.

Clevis: maximum Hanger Spacing = 18 ft/2 + 2 ft/2 = 10 ft
Half distance from Hangar before pier to half distance between hangers over pier

Roller hanger governs, load to roller = 23 ft (42 lb/ft)
= 966 lb

Support Rod, total two, load to rod $DW_6 = 966\ lb/2 = 483\ lb$

Factored Load carried by rod $P_{U6} = \gamma_p (DW_6)$

For the Strength 1 Limit State $\gamma_p = 1.5$

$P_{U6} = \gamma_p DW_6 = 1.5(483) = 724.5\ lb$

To avoid possibility of failure of the utility hanger system, due to the failure of one hanger, design all hangers for a capacity at which each can carry the load from an adjacent compromised hanger.

$P_{U6\ Design} = (2)(P_{U6}) = 1450\ lb = 1.45\ kips$

TOPS

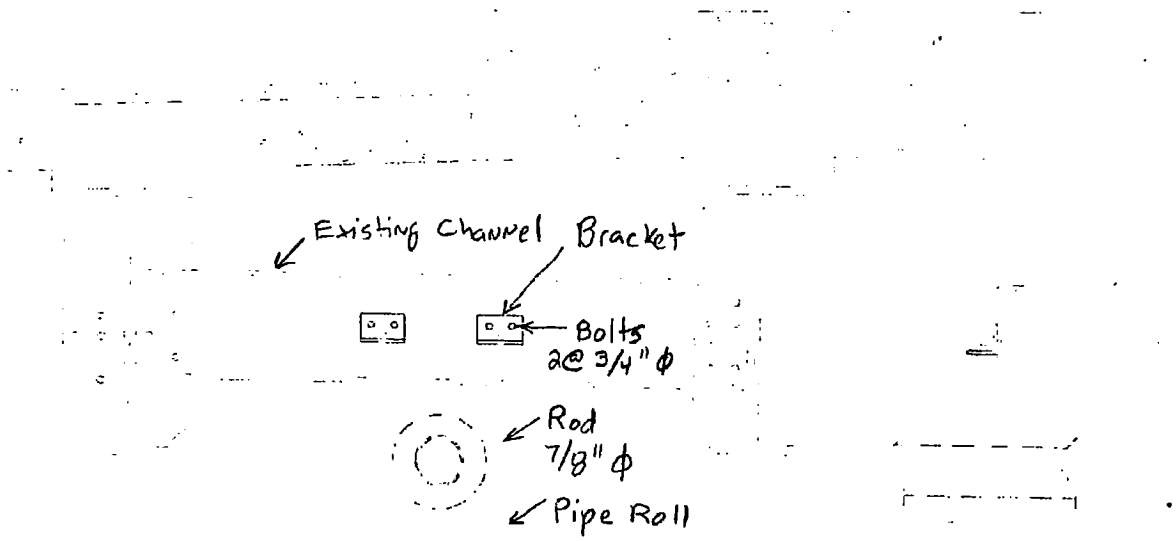

	Check Method* By Inspect	By Calc.	Manu. Liter.	Manufacturers Allowable Load	Actual Load	OK
Pipe Roll			✓	2400 lb	(966)(2)	✓
Rod			✓	Pipe Roll Governs 2400 lb/2 = 1200	(483)(2)	✓
Bolts	✓				Note these are unfact.	✓
Channel	✓					✓
Bracket		✓				

* From connection geometry, existing member sizes and the proposed connection methods we can observe that the individual components are relatively robust for the intended loading. The selected connection parts used, such as the bolts and brackets, are selected to match the relatively large pre-manufactured pipe support assemblies. This conservatively results in connections which have significantly greater capacity than required, hence some checks are made by inspect.

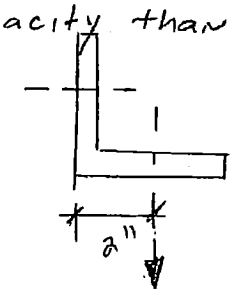

$P_{u6} = 725$ lb

Conduct bending and shear review of proposed bracket:

TOPS

Nominal Flexural Resistance of outstanding angle leg

AASHTO LRFD Bridge Design Specifications (AASHTO LRFD)

6.12.2.2.4 – Yielding will govern

C 6.12.2.2.4 – Use AISC Steel Design Manual

F10-1 $M_N = 1.5 M_y$ $M_y = F_y S$ $F_y = 36$ ksi

$M_N = 1.5(F_y)(S) = (1.5)(36\text{ ksi})(.5\text{ in}^3)$ $S = \frac{bd^2}{3}$ of Leg

$M_N = 27$ kip-in

$b = 6''$

$\phi M_N = .9(27) = 24.3$ kip-in

$d = 1/2''$

$M_U = P_U(e) = (1.45\text{ k})(2\text{ in}) = 2.9$ kip-in

$S = \frac{(6)(.5)^2}{3} = .5\text{ in}^3$

OK

Nominal Shear Resistance of outstanding angle leg

G4, EQ G2-1 with $C_V = 1.0$ $A_w = bt$ $K_V = 1.2$

$V_N = 0.6 F_y A_w C_V$ $A_w = .5(6) = 3\text{ in}^2$

$V_N = 0.6(36\text{ ksi})(3\text{ in}^2)(1.0)$

$= 64.8$ kips

$\phi V_N = (1.0)(V_N)$ $\phi = 1.0$

$\phi V_N = 64.8$ kips

$V_U = P_U = 1.45$ kips

OK

TOPS

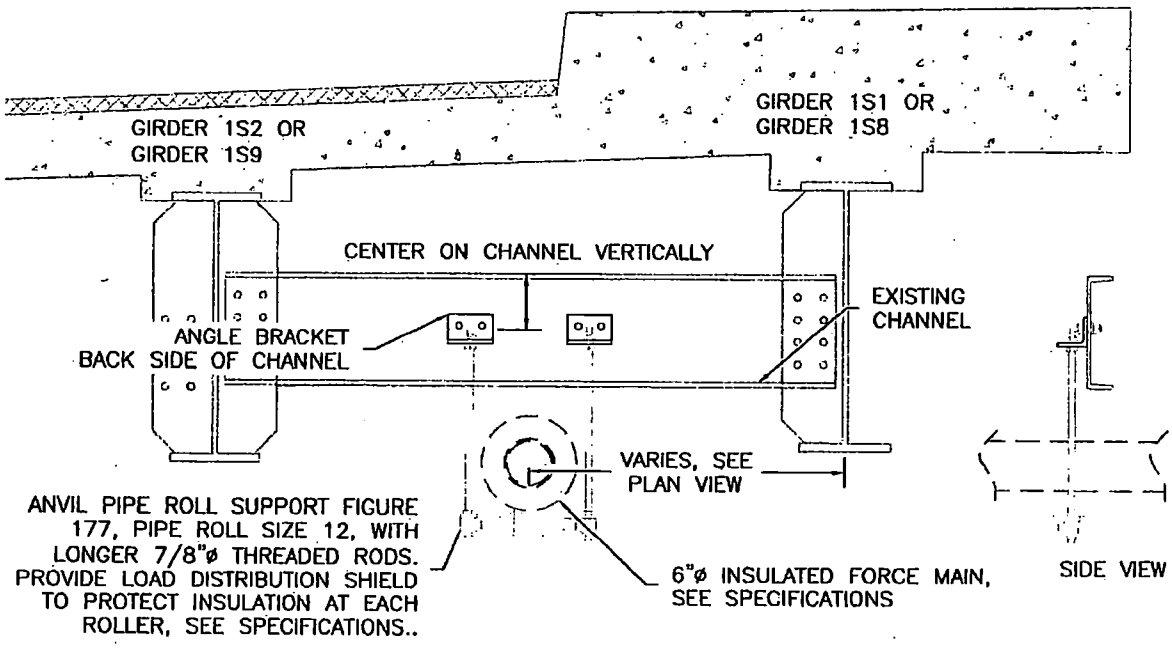

SECTION B–B
OTTER CREEK BRIDGE
PIPE SUPPORT ASSEMBLIES AT INTERMEDIATE LOCATIONS

SCALE: NTS	HERITAGE ENGINEERING	FIGURE NO.
DATE:		01
DRAWN BY: DTH		
PROJECT NO:	www.heritageengineeringvt.com	

Utilities proposed on Clarendon River Bridge

6" Ductile Iron insulated sewer Force Main

12" Ductile Iron insulated Water Main

Weight of Utilities:

6" = 42 lb/ft, from pg 1

12" = 113.4 lb/ft, from pg 1 ⇒ 04/27/15 See Note on Page 10

Roller, maximum load to each support:
Longest distance supported by one roller assembly is from abutment wall to first hanger, plus half distance to next hanger = 12 ft + 7 ft/2 = 15.5 ft

Load to hanger assembly = (15.5 ft)(42 + 113.4) = 2408.7 lb

Support rod, total two, load to rod = 2408.7/2 = 1204.4 lb
$DW_{rod\ 6+12}$ = load to each rod from 6" and 12" pipes = 1204.4 lb
For the Strength 1 Limit State $\gamma_p = 1.5$

Factored load carried by rod = $\gamma_p (DW_{rod\ 6+12})$
$= 1.5(1204.4)$
$= 1806.5$

$P_{v\ 6+12}$ = Factored load to each rod from 6" and 12" Utilities

$P_{v\ 6+12}$ = 1806.5 lb

(a) To avoid possibility of failure of the utility hanger system due to the failure of one hanger, design all hangers for a capacity at which each can carry the load from an adjacent compromised hanger.

$P_{v\ 6+12}$ design = $(2)(P_{v\ 6+12}) = (2)(1806.5) = 3613$ lb

To check pipe roll capacity note that pipe roll itself supports, conservatively the larger pipe, again doubling load but leaving loads unfactored. Lower pipe roll governs.

$(2)\ DW_{12\ only} = (2)(15.5\ ft)(113.4) = 3515.4$ lb

Unfactored Load carried by rods, doubled = $(2)(DW_{rod\ 6+12})$
Note that rods carry two pipes = 2408.7

TOPS

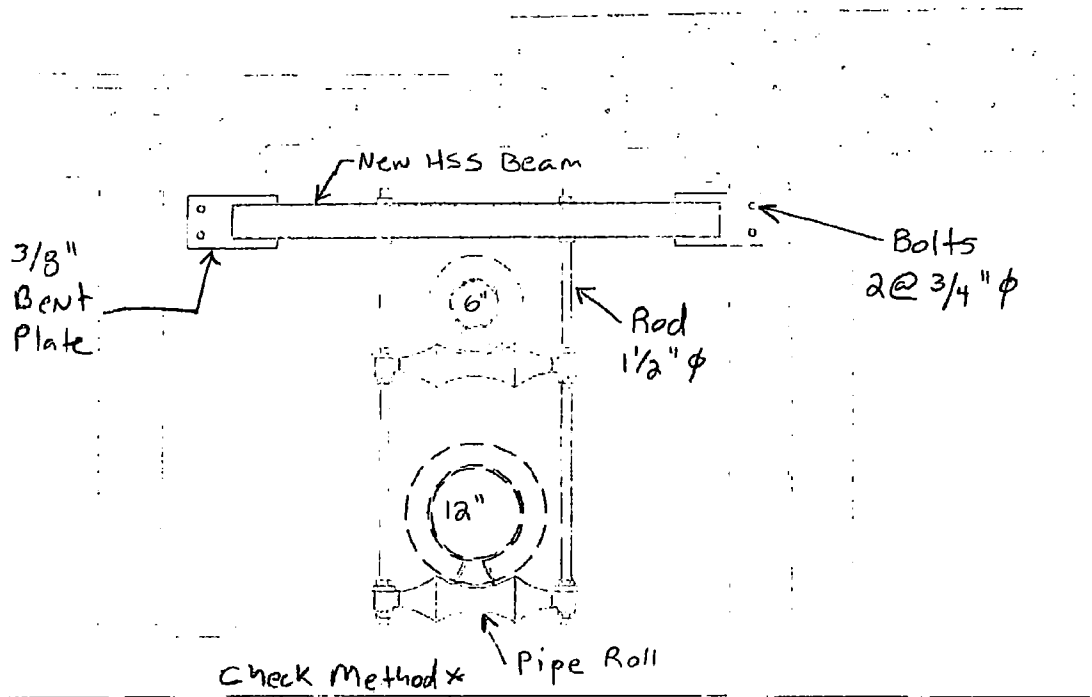

	Check Method* By Insp.	By Calc	Man. Lit.	Manufacturers Allowable Load	Actual Load	OK
Pipe Roll			✓	4,550	3515 lb	✓
Rod	✓				2409 lb	✓
Bolts	✓					✓
HSS Beam		✓			Note these are unfacti	✓
Bent Plate	✓					✓

* See Notes regarding check method and discussion on page 2.

Conduct bending and shear review of proposed HSS Beam, governs:

See the following software calculations which include the member selection, bending check, shear check, load diagram, shear diagram and deflection check.

TOPS

Steel Check Report

Element: Untitled1 (C:\DCC\steel4\)
Description:
Date: 04/19/2015 04:45 PM

Company:
User:
Software: Digital Canal Steel Design 4.1

GENERAL INFORMATION

Description	Value	Description	Value
Design Criteria	Check	Section Shape	
Design Code	AISC LRFD 13th Edition	Maximum Section Depth	
Total Span Length	7.00 Ft	Minimum Section Depth	
First Node Support	Pinned	Back-Back Distance (double angles only)	
Last Node Support	Pinned	Section Width (angles and tubes only)	
Total Load Deflection	L/240.00	Number of Solutions	
Live Load Deflection	L/360.00	Live Load Patterning	Yes
Maximum Stress Ratio	1.000	Check Section List	HSS4-1/2X4-1/2X1/4
Bending Coefficient	1.0	Bottom Flange Bracing	-0.00, 7.00 Ft
Steel Yield Stress	46 K/In^2	Top Flange Bracing	-0.00, 7.00 Ft

SPAN LENGTH DATA (Unit: Ft)

Span 1	7.00	-	-	-	-	-	-

see note ⓐ page 5
Unfactored Load to each rod, doubled
(DW rod 6+12 = 1204.4 lb)(2)

LOAD INFORMATION

LOADS

Ref. No.	Load Case	Load Type	Dir	Begin Value	Begin Position	End Value	End Position
1	Dead	Concen	Y	-2.408 (K)	2.50 (Ft)	-	-
2	Dead	Concen	Y	-2.408 (K)	4.50 (Ft)	-	-

LOAD COMBINATIONS

Ref. No.	Strength	Ref. No.	Service (Deflections)
1	1.4DL	1	DL Only
2	1.50DL	2	

ELEMENT REPORTS

Note: Deflections are calculated based on E*I = 1e+3 in^2

Load combination 1 is default ASCE with γ=1.4. Load Combination 13 is AASHTO Strength Limit state with γ=1.5.

SPAN 1

Load Comb	Node No.	Inflection Points (Ft)	Axial (K)	Shear (K)	Moment (K-Ft)	Max Moment (K-Ft)	Distance (Ft)	Max Deflection (In)	Distance (Ft)
1	1	0.000	-0.000	3.371	-0.000	8.428	2.500	-74.032	3.500
	2	7.000	0.000	-3.371	0.000				
13	1	0.000	-0.000	3.612	-0.000	9.030	2.500	-79.320	3.500
	2	7.000	0.000	-3.612	0.000				

REACTIONS

Node No.	Load Comb	PX (K)	PY (K)	Moment (K-Ft)
1	LC1: 1.4DL	-0.000	3.371	-0.000
"	LC13: 1.50DL	-0.000	3.612	-0.000
2	LC1: 1.4DL	-0.000	3.371	0.000
"	LC13: 1.50DL	-0.000	3.612	0.000

CRITICAL MOMENT/SHEAR DETAILS

Section Name: HSS4-1/2X4-1/2X1/4 Status: OK

8

SPAN 1

	Unit	Load Effects	Resistance	Ratio	Load Combination
Bending-X	K-Ft	9.030	20.907	0.432	LC13: 1.50DL
Shear-Y	K	3.612	43.998	0.082	LC13: 1.50DL
Total Deflection-Y	In	-0.160	0.350	0.457	LC1: DL Only
Live Deflection-Y	In	-0.000	0.233	0.000	LC1: DL Only

Diagrams of Span(s): All of HSS4-1/2X4-1/2X1/4 under 1.5ODL

$\gamma = 1.5$

Description:
Unit: ft, kip, kip-ft

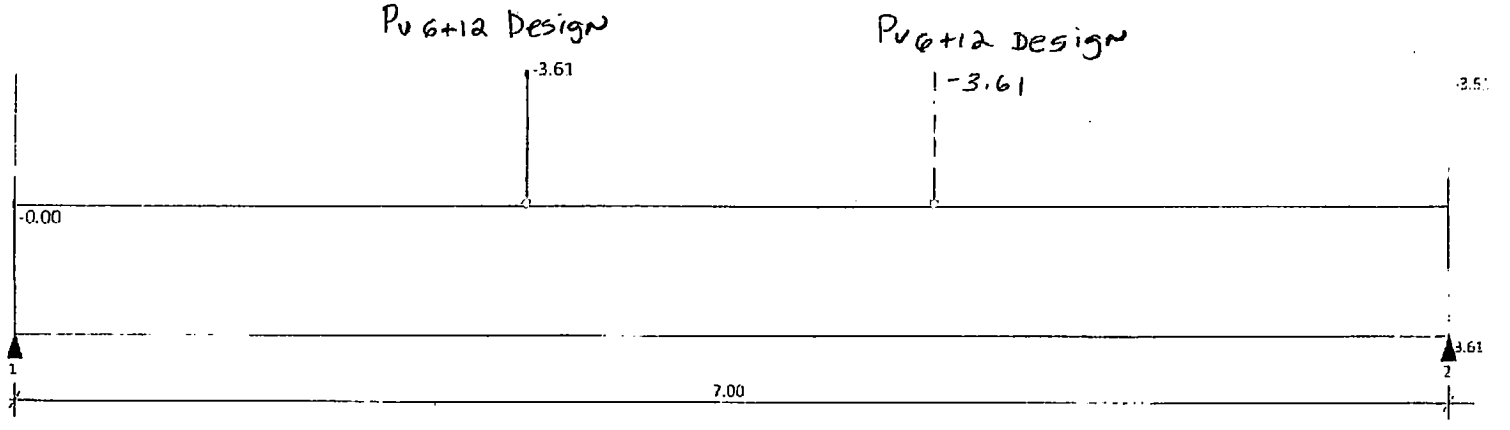

Shear diagram: (Unit: kip)

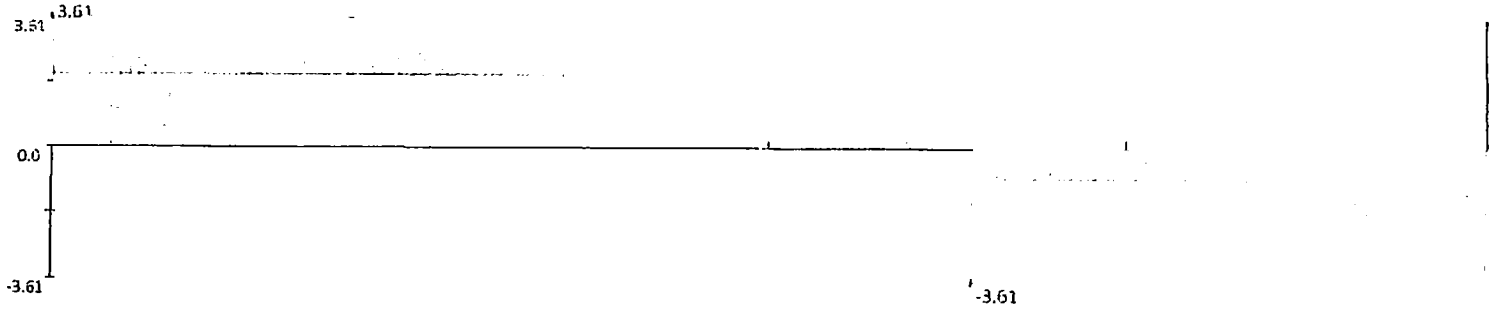

Moment diagram: (Unit: kip-ft)

Service Load Deflection diagram: (Unit: 1/100 in)

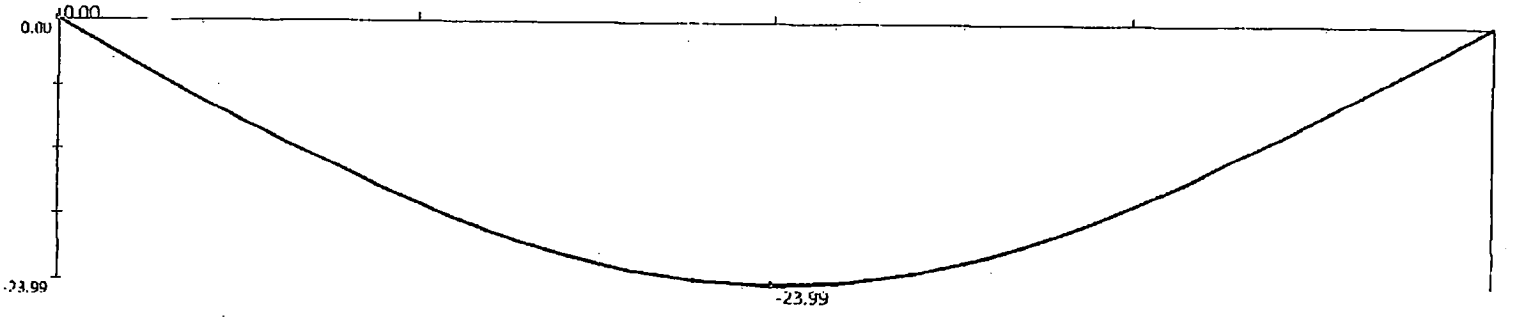

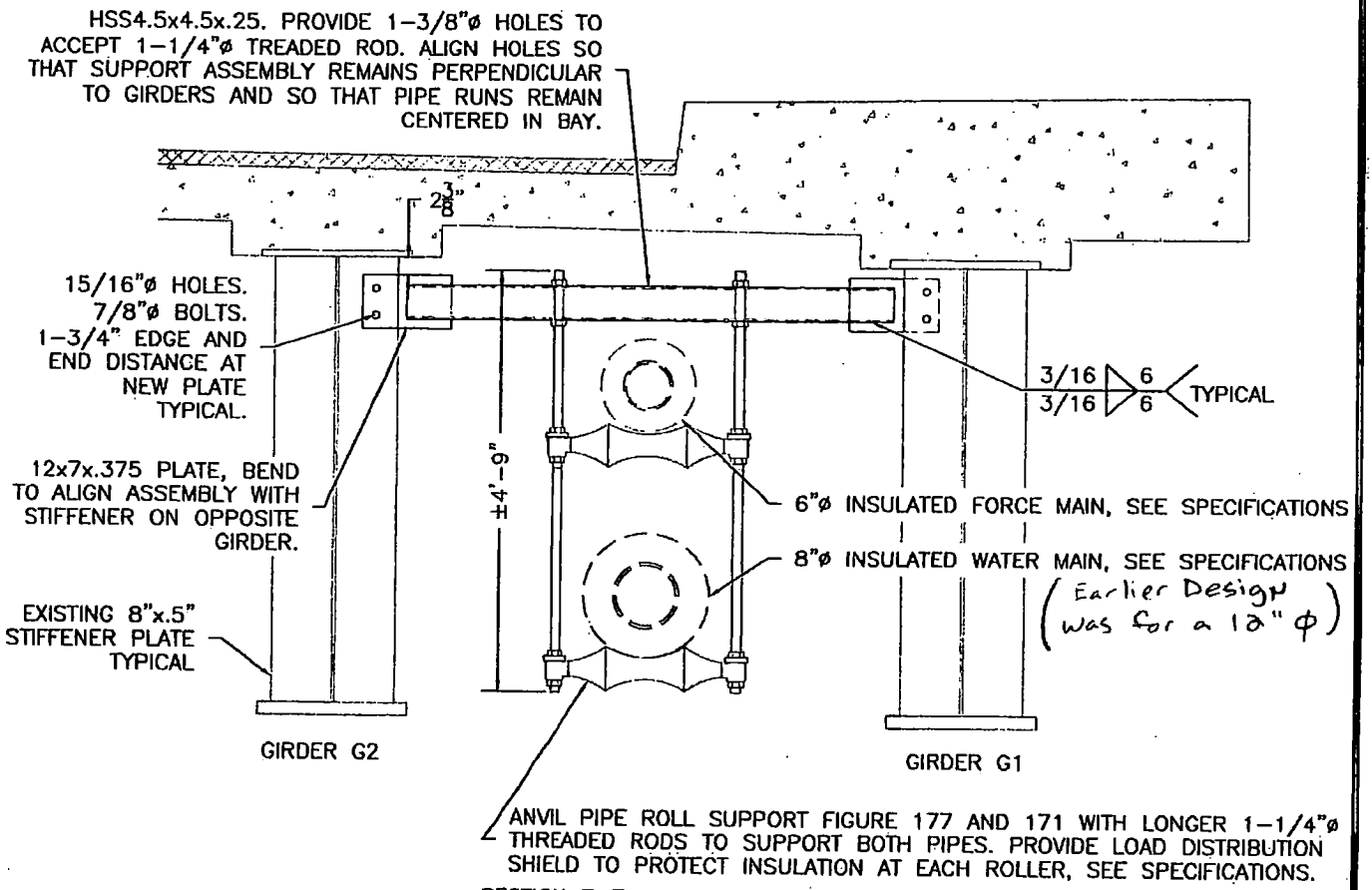

SECTION F-F
CLARENDON RIVER BRIDGE
UTILITY SUPPORT ASSEMBLIES

CONTRACTOR TO CONFIRM THAT THE PIPE ROLL SIZES ARE COMPATIBLE WITH THE PIPE INSULATION MATERIAL AND LOAD DISTRIBUTION SHIELDS CALLED OUT BY THE PROJECT SPECIFICATIONS.

04/27/15
Note: Earlier design and calculations consider a 12" ϕ water Main. The final design by the Civil Engineer specifies an 8" ϕ water main. By inspection the final loading is significantly lighter than that used for this calculation package, therefore no change to the assemblies is proposed.

SCALE: NTS	HERITAGE ENGINEERING	FIGURE NO.
DATE:		02
DRAWN BY: DTH		
PROJECT NO:	www.heritageengineeringvt.com	

Fig. 300

Adjustable Clevis for Insulated Lines

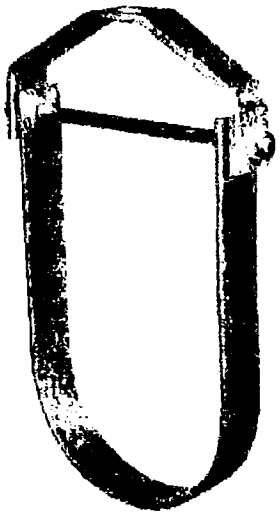

Size Range: 3/4" through 12"
Material: Carbon steel
Finish: Plain, 8" & Smaller: Zinc Plated (Hot-Dip Galvanized optional), 10" & Larger: Hot-Dip Galvanized with Zinc Plated Bolts & Nuts or Epoxy Coated
Service: Recommended for suspension of insulated **stationary** pipe lines.
Maximum Temperature: Plain 650° F, Galvanized and Epoxy 450° F
Approvals: Complies with Federal Specification A-A-1192A (Type 1), *WW-H-171-E (Type 1)*, ANSI/MSS SP-69 and MSS SP-58 (Type 1).
Installation: Hanger load nut above clevis must be tightened securely to assure proper hanger performance.
Adjustment: Vertical adjustment is provided, varying with the size of the clevis. Tighten upper nut after adjustment.
Features:

- Designed for 2" of insulation on 3/4" through 1 1/2" pipe and 4" of insulation on 2" and larger pipe.
- When properly installed, clevis bolt is outside the insulation.

Ordering: Specify pipe size, figure number, name and finish.

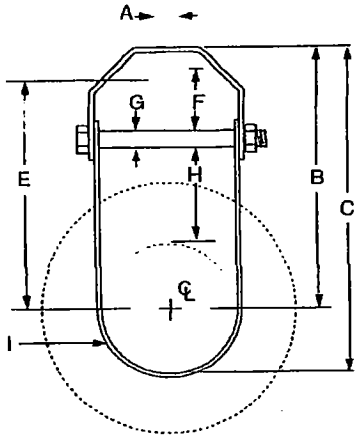

FIG. 300: LOADS (LBS) • WEIGHT (LBS) • DIMENSIONS (IN)

Pipe Size	Max Load	Weight	Rod Size A	B	C	E	Adjustment F	G	H	I Width Lower
3/4	730	0.51	3/8	3 5/8	4 1/4	2 7/8	1/2	1/4	2	1
1		0.58		4	4 11/10	3 1/4	5/8			
1 1/4		0.64		4 7/10	5 1/4	3 5/8	7/8			
1 1/2		0.72		4 3/4	5 3/4	4 1/16	1 1/16			
2		0.85		7 7/16	8 11/16	6 1/2	1 5/8		4	
2 1/2	1,350	1.90	1/2	8 7/16	9 13/16	7 1/2	2	3/8		
3		2.00		8 5/8	10 5/16	7 9/16	1 3/4			
4	1,430	2.50	5/8	9 3/8	11 5/8	8 3/16	1 15/16			1 1/4
5		3.00		9 7/8	12 5/8	8 3/4	1 3/4	1/2		
6	1,940	3.40	3/4	10 5/8	14	9 3/8	1 7/8			1 1/2
8	2,000	6.70		12 3/8	16 3/4	11	2	5/8		1 3/4
10	3,600	11.0	7/8	13 3/4	19 3/16	12 1/4	2 1/8	3/4		
12	3,800	13.8		15 1/8	21 9/16	13 5/8	2 7/16			2

Fig. 177

Adjustable Pipe Roll Support

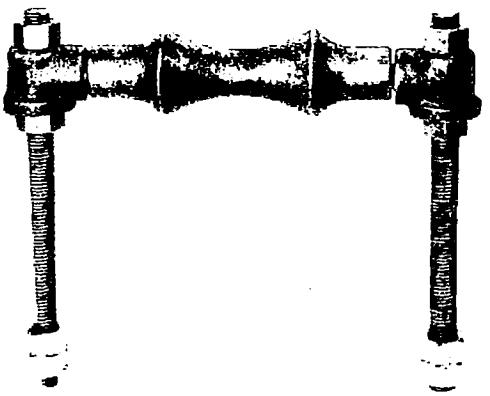

Size Range: 1" through 30"
Material: Cast iron roll and sockets; steel roll rod, continuous thread rods and hex nuts
Finish: Plain, Zinc Plated (Hot-Dip Galvanized optional) or Resilient Coated
Service: For support of pipe where longitudinal movement due to expansion and contraction will occur and where vertical adjustment up to 6" may be necessary.
Maximum Temperature: 450° F at roller, 300° F at Resilent coated roller.
Approvals: Complies with Federal Specification A-A-1192A (Type 41), *WW-H-171-E (Type 42)*, ANSI/MSS SP-69 and MSS SP-58 (Type 41).
Installation: Normally used directly above steel beams, brackets angles, etc.
Features: Advantages of pipe rollers with a protective resilient coated covering.

- Non conductive pipe rollers - prevent the passing of current from pipeline to structure.
- Corrosion resistant - for protection against severe weather conditions, moderate corrosive conditions such as marine atmospheres and weather resistant to ultra-violet radiation.
- Low coefficient of friction between pipe and resilient coated pipe roller.

How to size:

(1) If roll is to support bare pipe, select the size directly from nominal pipe size (see below).
(2) If used with pipe covering protection saddle, see page 123 for size of pipe roll.
(3) If roll is to support covered pipe, the O.D. of the covering should not be greater than the O.D. of the pipe for which the roll was designed.

Ordering: Specify size of roll, figure number and name. Be certain to order oversized rolls when insulation and protection saddles makes this necessary.

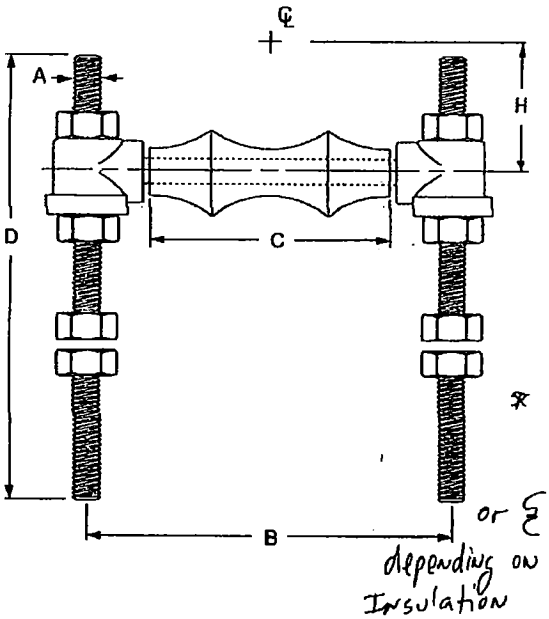

FIG. 177: WEIGHT (LBS) • DIMENSIONS (IN)

Pipe Size	Weight	A	B	C	D	H
1	1.1	⅜	3	1½	12	1 1/16
1¼	1.2		3⅜	1⅞		1¼
1½	1.2		3⅝	2⅛		1⅜
2	1.3		4⅛	2⅝		1⅝
2½	2.3	½	4⅞	3⅛		1 15/16
3	2.4		5½	3¾		2¼
3½	2.7		6⅛	4¼		2 9/16
4	3.8	⅝	6⅞	4¾		2 13/16
5	4.7		8 1/16	5 13/16		3 7/16
6	7.6	¾	9 9/16	6⅞		4
8	11.0		11 15/16	8⅞		5⅛
10	13.7	⅞	14 1/16	11		6⅜
12	19.4		15 13/16	12½		7 7/16
14	31.2	1	17¾	14¼		8⅜
16	42.5		19¾	16¼	18	9 7/16
18	46.6		21⅞	18¼		10½
20	66.2	1¼	24¼	20¼		11⅝
24	102.5	1½	28⅞	24¼	24	14
30	186.8		35½	30¼		17 7/16

DI/CI ROLL SIZING

DI/CI Pipe Size	Fig. 177 Roller Size
3	4
4	5
6	6
8	8
10	10
12	14
14	16
16	18
18	20
20	24
24	30
30	No Recom.

Fig. 171: Pipe Roll

Single Pipe Roll

Size Range: 1" through 30"
Material: Cast iron roll and sockets, steel roll rod
Finish: Plain, Zinc Plated (Hot-Dip Galvanized optional) or Resilient Coated
Service: For suspension of pipe from two rods where longitudinal expansion and contraction may occur.
Approvals: Complies with Federal Specification A-A-1192A (Type 41), *WW-H-171-E (Type 42)*, ANSI/MSS SP-69 and MSS SP-58 (Type 41).
Adjustment: Adjustable socket permits vertical adjustment at the roll.
Maximum Temperature: 450° F at roller, 300° F at resilient coated roller.
How to size:

(1) If the roll is to support non-insulated pipe, select the size directly from nominal pipe size (column 1) in table below.
(2) If used with pipe covering protection saddle, see page 123 for size of pipe roll.

Features:

- Provides for vertical adjustment; nut at bottom of hanger rod fits into the socket preventing loosening or turning due to vibration.
- Pipe roll is designed for two point surface contact with pipe or saddle.

Features: Advantages of pipe rollers with a protective resilient coated covering.

- Non conductive pipe rollers - prevent the passing of current from pipeline to structure.
- Corrosion resistant - for protection against severe weather conditions, moderate corrosive conditions such as marine atmospheres and weather resistant to ultra-violet radiation.
- Low coefficient of friction between pipe and resilient coated pipe roller.

Ordering:

- Specify pipe roll size.
- Order should include figure number, name and finish in all cases. Hanger rods and nuts to be ordered separately.
- Be certain to order oversized rolls when insulation and protection saddles makes this necessary.

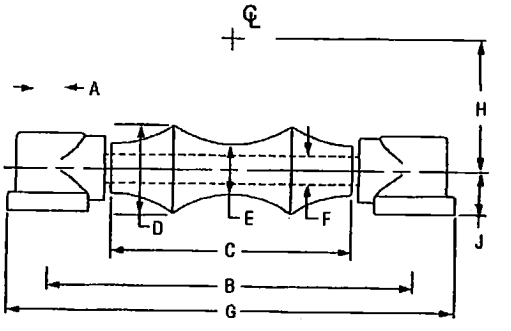

FIG. 171: LOADS (LBS) • WEIGHT (LBS) • DIMENSIONS (IN)

Pipe Size	Max O.D. Covering	Rod Size A	Max Load	Weight	G	B	C	D	E	F	H	J
1	2	3/8	600	0.45	4 1/8	3	1 1/2	1	3/4	3/8	1 1/10	9/10
1 1/4	2 1/2			0.48	4 1/2	3 3/8	1 7/8	1 1/10			1 1/4	
1 1/2	2 3/4			0.51	4 3/4	3 5/8	2 1/8	1 1/8			1 3/8	
2	3 1/4			0.57	5 1/4	4 1/8	2 5/8	1 3/16			1 5/8	
2 1/2	3 3/4	1/2	660	1.00	6 1/4	4 7/8	3 1/8	1 3/8	7/8	1/2	1 15/16	11/16
3	4 1/2		700	1.10	6 7/8	5 1/2	3 3/4	1 7/10			2 1/4	
3 1/2	5		750	1.40	7 1/2	6 1/8	4 1/4	1 5/8	1		2 9/16	3/4
4	5 1/2	5/8		1.70	8 1/4	6 7/8	4 3/4	1 3/4			2 13/16	
5	7			2.60	9 11/16	8 1/16	5 13/16	2	1 1/8	5/8	3 7/10	7/8
6	8 1/4	3/4	1,070	4.50	11 7/10	9 9/10	6 7/8	2 5/16	1 1/4	3/4	4	1
8	10 1/2		1,350	7.20	14 1/16	11 15/16	8 7/8	2 13/16	1 1/2	7/8	5 1/8	1 1/8
10	12 3/4	7/8	1,730	9.50	16 3/16	14 1/16	11	3 3/8	1 3/4		6 3/8	
12	14 3/4		2,400	15.90	17 15/16	15 13/16	12 1/2	3 7/8	2	1	7 7/16	1 1/4
14	16 1/4	1	3,130	24.30	20 1/8	17 3/4	14 1/4	4 5/8	2 1/2	1 1/8	8 3/8	1 3/8
16	18		3,970	31.90	22 1/8	19 3/4	16 1/4	5	2 5/8	1 1/4	9 7/16	1 1/2
18	20 1/4		4,200	35.50	24 1/2	21 7/8	18 1/4	5 7/16	2 3/4		10 1/2	
20	22 1/2	1 1/4	4,550	47.00	27 1/4	24 1/4	20 1/4	6	3		11 5/8	1 5/8
24	26 1/2	1 1/2	6,160	76.30	32 1/8	28 7/8	24 1/4	7 3/10	3 5/8	1 1/2	14	1 3/4
30	32 1/2		7,290	129.90	39	35 1/2	30 1/4	8 15/10	4 1/2	1 3/4	17 7/10	2 7/16

* or 5

DI/CI ROLL SIZING

DI/CI Pipe Size	Fig. 171 Roller Size
3	4
4	5
6	6
8	8
10	10
12	14
14	16
16	18
18	20
20	24
24	30
30	No Recom.

Simple Span Composite Steel Girder Bridges

Otter Creek Bridge - USBR4 BR4-4

Load and Resistance Factor Rating per

AASHTO Manual for Bridge Evaluation
Second Edition 2011 with Interim Rev Through 2014

Superstructure Evaluation of:

Existing Girders, both Interior and Exterior as Noted

Span	72	ft	
Year	1958	Approximate	
Material	ASTM A373-56T		
Fy	33	ksi	
F'c	3	ksi	
Condition	Good		Conservatively a condition factor for Fair is used
Riding Surface	Good		
Skew	02° 32' 16"		
Framing	Channel Diaphragms 18ft o.c.		

Analysis is applicable to superstructure, no analysis was completed for Substructure.

Rating Factors (RF) are calculated for the Inventory Level - Strength 1 Limit State for Flexure and for Shear
Live Load effects are included for the AASHTO Design HL-93 design load

Analysis is first performed by conservatively leaving out the effects of the haunch depth
The haunch is included in the analysis only if necessary to demonstrate RF>1

Note A - Rating Factors are calculated first for the Existing Bridge with utilities that were observed in place
Note B - Rating Factors are calculated for the Existing Bridge with existing and PROPOSED utilities in place

		Rating Factor A "Existing"	Rating Factor B "Proposed"
Interior Girder	Flexural Rating Factoı	1.329	1.325
Interior Girder	Shear Rating Factor	2.528	2.525
Exterior Girder	Flexural Rating Factoı	1.117	1.114
Exterior Girder	Shear Rating Factor	2.739	2.736

It is thought reasonable to consider the proposed utilities based on a Rating Factor in all cases greater than 1

Otter Creek Bridge

Interior Girder: Existing Condition with Proposed Utilities B

Beam Information			Plate, bottom if present	
db	36.16			
tf	1.1		tp	1.125
bf	12.03		bp	11
tw	0.68			
Ab	49.98		Ap	12.375
Ixx	10470		Ixx of plate	0
D	33.96	web depth		
Af	13.233	flange area		
Af comb	25.608	Combined area of Bottom Flange and Cover Plate		
Fyc	33	yield stress of compression flange (top flange)		
Fyw	33	yield stress of web		
Fyt	33	yield stress of bottom flange		
Es, Eb	29000	Steel modulus		

Non-Composite Beam Section Properties

y bar	15.51	
c1	3.70	na to center of area 1
c2	14.94	na to center of area 2
cs1	21.78	na to top of steel
cs2	15.51	na to bottom of steel
Ixx	13917.30	
Stop	639.00	
Sbottom	897.59	

Composite Section Properties

S=	7	ft	Stringer or Girder Spacing
N=	9		Modular Ratio, concrete transformed to steel
f'c	3	ksi	Concrete compressive strength

Section	Effective Width in	Transformed Width	Depth in	Transformed Area Ai	yi	Ai*yi	yi-ybar	Ai*(yi-ybar)^2
Deck	84	9.33	7.5	70	41.035	2872.45	12.02758	10126.39
Haunch	20	2.22	0	0	37.285	0	8.277582	0
Girder				49.98	19.205	959.8659	9.802418	4802.448
Plate				12.375	0.5625	6.960938	28.44492	10012.78
				132.355		3839.277		24941.62

y bar transformed Section	29.00742
Ixx total	35411.62
y stop	8.277582
y bottom	29.00742
Stop	4278.015
Sbottom	1220.778

Locate Plastic Neutral Axis of Composite Section and Plastic Forces in individual sections of composite plastic section

y plates	1.09	Distance from bottom of web to neutral axis of bottom flange combined with cover plate		
Ps	1606.5	Concrete Force	Crb	0.8 Ratio
Pc	436.689	Top Flange Force		
Pw	762.0624	Web Force		
Pt	845.064	Bottom Flange and Cover Plate Force		

Review these forces in LRFD Design Appendix D6.1 Table D6.1 to see which case is applicable for formulas for y bar and Mp

This section, case II is applicable

y bar	0.55	Enter applicable formula and solve from Table LRFD Design D6.1
D/tw	49.94	Check that it is less than 150
Dp	8.05	Depth from top of concrete to neutral axis of plastic section
Dt	46.99	Total depth of composite section

Dp/Dt		0.17	Ratio
ds		4.30	pna to center of concrete effective width force
dc		0.00	pna to center of top flange force
dw		17.53	pna to center of web force
dt		35.60	pna to center of bottom flange plate group
Mp	50469.25	kip-in	Mp from LRFD design Table D6.1
	4205.77	kip-ft	
Mn	3995.72	Examine LRFD design 6.10.7.1.2 with this ratio and select Mn	
K		5.00	Value of K for unstiffened webs
		74.24	Ratio 6.10.9.3.2-4
C (factor)		1.00	If D/tw from above less than this ratio than C=1, not Capacity
Vn		442.00	Kips
ϕf, ϕv		1.00	
ϕc		0.95	
ϕs		1.00	
ϒ DC		1.25	
ϒ DW	1.25	Note that deck thickness was field measured, so this factor is updated per MBE 6A.2.2.3	
ϒ LL		1.75	
C Mom		3795.93	Moment Capacity
RF Mom		1.325	Rating Factor Moment
C Shear		419.90	Shear Capacity
RF Shear		2.525	Rating Factor Shear

Otter Creek Bridge — Interior Girder: Existing Condition with Proposed Utilities B

Determine weight of structure	Look at Girder Group 1S8, 1S9, 1S10, 1S10, 1S11		
Concrete unit weight	154	lb/ft^3	Presume higher unit weight for DL calcs
Metal unit weight	490	lb/ft^3	
	0.284	lb/in^3	
Number of Girders this group S	5	Girders	
Stringer Length cl bearing to cl bearing L	72	ft	
Eb	29000	Modulus for Steel Beam	
f'c	3	ksi	Presumed for concrete

		Piece Mark	b in	d in	Length ft	Length in	Volume in^3	Weight/ft lb	Piece Wt lb	Number Pieces	Total Weight
Stringer	Self Weight of Beam	IS8			72			170	12240	1	12240
	Bottom Plate	n8	11	1	42	504	5544		1572	1	1572
	Stiffener	a8	8	0.5	2.85	34.2	136.8		39	1	39
	Stiffener	b8	7.5	0.5	2.85	34.2	128.25		36	3	109
	Stiffener		0	0	2.85	34.2	0		0	1	0
	Stiffener		0	0	2.85	34.2	0		0	1	0
Stringer	Self Weight of Beam	IS9			72			170	12240	1	12240
	Bottom Plate	p8	11	1.125	43.83	525.96	6508.8		1846	1	1846
	Stiffener	c8	8	0.5	2.85	34.2	136.8		39	1	39
	Stiffener	d8	8	0.5	2.85	34.2	136.8		39	1	39
	Stiffener	h8	7.5	0.5	2.85	34.2	128.25		36	3	109
	Stiffener	k8	7.5	0.5	2.85	34.2	128.25		36	3	109
Stringer	Self Weight of Beam	IS10			72			170	12240	1	12240
	Bottom Plate	p8	11	1.125	43.83	525.96	6508.8		1846	1	1846
	Stiffener	d8	8	0.5	2.85	34.2	136.8		39	1	39
	Stiffener	e8	8	0.5	2.85	34.2	136.8		39	1	39
	Stiffener	h8	7.5	0.5	2.85	34.2	128.25		36	3	109
	Stiffener	k8	7.5	0.5	2.85	34.2	128.25		36	3	109
Stringer	Self Weight of Beam	IS10			72			170	12240	1	12240
	Bottom Plate	p8	11	1.125	43.83	525.96	6508.8		1846	1	1846
	Stiffener	d8	8	0.5	2.85	34.2	136.8		39	1	39
	Stiffener	e8	8	0.5	2.85	34.2	136.8		39	1	39
	Stiffener	h8	7.5	0.5	2.85	34.2	128.25		36	3	109
	Stiffener	k8	7.5	0.5	2.85	34.2	128.25		36	3	109
Stringer	Self Weight of Beam	IS11			72			170	12240	1	12240
	Bottom Plate	p8	11	1.125	43.83	525.96	6508.8		1846	1	1846
	Stiffener	d8	8	0.5	2.85	34.2	136.8		39	1	39
	Stiffener	e8	8	0.5	2.85	34.2	136.8		39	1	39
	Stiffener	g8	7.5	0.5	2.85	34.2	128.25		36	3	109
	Stiffener	k8	7.5	0.5	2.85	34.2	128.25		36	3	109
Spirals	Shear Connectors				288			5			1440
Diaphragm	Self Weight of Channe	D1			6.79			33.9	230	12	2762
Diaphragm	Self Weight of Channe	D2	Half of diaphragm l		3.02			33.9	102	3	307
Diaphragm	Self Weight of Channe	D3	End diaphragms and those directly over bearings not included								
Bolts	1/4 total bolt count								1	288	288
			Width	Thickness	Length						
Deck			34.33	0.625	72					1	237907
Haunch			1.67	0.417	72					5	38608
			Width	Thickness	Length						
Sidewalk (DC2)	DC2		6.25	1	72					1	69300
								Wt per ft			
Guard Rail	DC2				72			19		1	1368

Wearing Surface	DW1	28	0.375	72	1	116424

Note heavier as built condition of wearing surface from field measurements and corresponding adjustment of load factors

Existing Utility	DW2			72	60	1	4320
Proposed Utility	DW3			72	42	1	3024

DC1 - Noncomposite Dead Loads: Stringers, Diaphragms, Stiffeners, Spirals, Bolts, Deck

Total Sum 352798 lb
Weight per ft per girder = sum/ 0.98 K/ft

M DC1	635.0	Kip-ft
V DC1	35.3	Kip

DC2 - Composite Dead Loads: Guard Rail, Sidewalk

Total Sum 70668 lb
Weight per ft per girder = sum/ 0.20 K/ft

M DC2	127.2	Kip-ft
V DC2	7.1	Kip

DW - Wearing Surface, existing utilities, proposed utilities

Total Sum 123768 lb
Weight per ft per girder = sum/ 0.34 K/ft

M Dw	222.8	Kip-ft
V Dw	12.4	Kip

Conc unit wt	0.1	k/ft^3	presumed for N calculation
Ed	3155.9	ksi	
N	9.2		
Kg			
Ixx	13917.3		Moment of Inertia for Beam and Cover Plate
A	62.4		A beam plus A plate
eg	25.5		na of built up steel section to na of deck
Kg	501341.3		
S	7	ft	Enter applicable table 4.6.2.2b-1 or d-1 for distibution formula, calculate by hand, enter
L	72	ft	
Kg/12Lts^3	1.375		Interior Girder
gm1	0.449		One lane loaded
gm2	0.614		two lanes loaded
gm	0.614		Governs
gv1	0.640		One lane loaded
gv2	0.743		two lanes loaded
gv	0.743		Governs
Lane MII+IM	1800	kip-ft	Live Load Moment plus impact per lane - AASHTO HL-93 at Inventory Level
Lane VII+IM	107	kips	Live Load Shear plus impact per lane - AASHTO HL-93 at Inventory Level
Girder MII+IM	1106	kip-ft	Live load Moment plus impact per girder
Girder VII+IM	80	kips	Live load Shear plus impact per girder

Otter Creek Bridge | Exterior Girder: Existing Condition with Proposed Utilities B

Beam Information			Plate, bottom if present	
db	36.16			
tf	1.1		tp	1
bf	12.03		bp	11
tw	0.68			
Ab	49.98		Ap	11
Ixx	10470		Ixx of plate	0
D	33.96	web depth		
Af	13.233	flange area		
Af comb	24.233	Combined area of Bottom Flange and Cover Plate = At		
Fyc	33	yield stress of compression flange (top flange)		
Fyw	33	yield stress of web		
Fyt	33	yield stress of bottom flange		
Es, Eb	29000	Steel modulus		

Non-Composite Beam Section Properties

y bar	15.73	
c1	3.35	na to center of area 1
c2	15.23	na to center of area 2
cs1	21.43	na to top of steel
cs2	15.73	na to bottom of steel
Ixx	13582.38	
Stop	633.76	
Sbottom	863.56	

Composite Section Properties

S=	7	ft	Stringer or Girder Spacing
Overhang=	37.5	inches	Width of Overhang
N=	9		Modular Ratio, concrete transformed to steel
f'c	3	ksi	Concrete compressive strength

Section	Effective Width in	Transformed Width	Depth in	Transformed Area Al	yi	Ai*yi	yi-ybar	Ai*(yi-ybar)^2
Deck	79.5	8.83	7.5	66.25	40.91	2710.288	12.06927	9650.459
Haunch	20	2.22	0	0	37.16	0	8.319271	0
Girder				49.98	19.08	953.6184	9.760729	4761.686
Plate				11	0.5	5.5	28.34073	8835.166
				127.23		3669.406		23247.31

y bar transformed Section	28.84073
Ixx total	33717.31
y stop	8.319271
y bottom	28.84073
Stop	4052.916
Sbottom	1169.087

Locate Plastic Neutral Axis of Composite Section and Plastic Forces in individual sections of composite plastic section

y plates	1.03	Distance from bottom of web to neutral axis of bottom flange combined with cover plate		
Ps	1520.4375	Concrete Force	Crb	0.8 Ratio
Pc	436.689	Top Flange Force		
Pw	762.0624	Web Force		
Pt	799.689	Bottom Flange and Cover Plate Force		

Review these forces in LRFD Design Appendix D6.1 Table D6.1 to see which case is applicable for formulas for y bar and Mp
This section, case II is applicable

y bar	0.60	Enter applicable formula and solve from Table LRFD Design D6.1
D/tw	49.94	Check that it is less than 150
Dp	8.10	Depth from top of concrete to neutral axis of plastic section
Dt	46.86	Total depth of composite section
Dp/Dt	0.17	Ratio
ds	4.35	pna to center of concrete effective width force
dc	0.05	pna to center of top flange force
dw	17.48	pna to center of web force

dt	35.48	pna to center of bottom flange plate group	
Mp	48434.10	kip-in	Mp from LRFD design Table D6.1
	4036.17	kip-ft	
Mn	3830.21	Examine LRFD design 6.10.7.1.2 with this ratio and select Mn	
K	5.00	Value of K for unstiffened webs	
	74.24	Ratio 6.10.9.3.2-4	
C (factor)	1.00	If D/tw from above less than this ratio than C=1, not Capacity	
Vn	442.00	Kips	
ϕf, ϕv	1.00		
ϕc	0.95		
ϕs	1.00		
ϒ DC	1.25		
ϒ DW	1.25	Note that deck thickness was field measured, so this factor is updated per MBE 6A.2.2.3	
ϒ LL	1.75		
C Mom	3638.70	Moment Capacity	
RF Mom	1.114	Rating Factor Moment	
C Shear	419.90	Shear Capacity	
RF Shear	2.736	Rating Factor Shear	

Otter Creek Bridge — Exterior Girder: Existing Condition with Proposed Utilities B

Determine weight of structure — Look at Girder Group 1S8, 1S9, 1S10, 1S10, 1S11

Concrete unit weight	154	lb/ft^3	Presume higher unit weight for DL calcs
Metal unit weight	490	lb/ft^3	
	0.284	lb/in^3	
Number of Girders this group S	5	Girders	
Stringer Length cl bearing to cl bearing L	72	ft	
Eb	29000	Modulus for Steel Beam	
f'c	3	ksi	Presumed for concrete

		Piece Mark	b in	d in	Length ft	Length in	Volume in^3	Weight/ft lb	Piece Wt lb	Number Pieces	Total Weight
Stringer	Self Weight of Beam	IS8			72			170	12240	1	12240
	Bottom Plate	n8	11	1	42	504	5544		1572	1	1572
	Stiffener	a8	8	0.5	2.85	34.2	136.8		39	1	39
	Stiffener	b8	7.5	0.5	2.85	34.2	128.25		36	3	109
	Stiffener		0	0	2.85	34.2	0		0	1	0
	Stiffener		0	0	2.85	34.2	0		0	1	0
Stringer	Self Weight of Beam	IS9			72			170	12240	1	12240
	Bottom Plate	p8	11	1.125	43.83	525.96	6508.76		1846	1	1846
	Stiffener	c8	8	0.5	2.85	34.2	136.8		39	1	39
	Stiffener	d8	8	0.5	2.85	34.2	136.8		39	1	39
	Stiffener	h8	7.5	0.5	2.85	34.2	128.25		36	3	109
	Stiffener	k8	7.5	0.5	2.85	34.2	128.25		36	3	109
Stringer	Self Weight of Beam	IS10			72			170	12240	1	12240
	Bottom Plate	p8	11	1.125	43.83	525.96	6508.76		1846	1	1846
	Stiffener	d8	8	0.5	2.85	34.2	136.8		39	1	39
	Stiffener	e8	8	0.5	2.85	34.2	136.8		39	1	39
	Stiffener	h8	7.5	0.5	2.85	34.2	128.25		36	3	109
	Stiffener	k8	7.5	0.5	2.85	34.2	128.25		36	3	109
Stringer	Self Weight of Beam	IS10			72			170	12240	1	12240
	Bottom Plate	p8	11	1.125	43.83	525.96	6508.76		1846	1	1846
	Stiffener	d8	8	0.5	2.85	34.2	136.8		39	1	39
	Stiffener	e8	8	0.5	2.85	34.2	136.8		39	1	39
	Stiffener	h8	7.5	0.5	2.85	34.2	128.25		36	3	109
	Stiffener	k8	7.5	0.5	2.85	34.2	128.25		36	3	109
Stringer	Self Weight of Beam	IS11			72			170	12240	1	12240
	Bottom Plate	p8	11	1.125	43.83	525.96	6508.76		1846	1	1846
	Stiffener	d8	8	0.5	2.85	34.2	136.8		39	1	39
	Stiffener	e8	8	0.5	2.85	34.2	136.8		39	1	39
	Stiffener	g8	7.5	0.5	2.85	34.2	128.25		36	3	109
	Stiffener	k8	7.5	0.5	2.85	34.2	128.25		36	3	109
Spirals	Shear Connectors				288			5			1440
Diaphragm	Self Weight of Channel	D1			6.79			33.9	230	12	2762
Diaphragm	Self Weight of Channel	D2	Half of diaphragm l		3.02			33.9	102	3	307
Diaphragm	Self Weight of Channel	D3	End diaphragms and those directly over bearings not included								
Bolts	1/4 total bolt count								1	288	288
			Width	Thickness	Length						
Deck			34.33	0.625	72					1	237907
Haunch			1.67	0.417	72					5	38608
			Width	Thickness	Length						
Sidewalk (DC2)	DC2		6.25	1	72					1	69300
								Wt per ft			
Guard Rail	DC2				72			19		1	1368
Wearing Surface	DW1		28	0.375	72					1	116424

Note heavier as-built condition of wearing surface from field measurements and corresponding adjustment of load factors

Existing Utility	DW2	72	60	1	4320
Proposed Utility	DW3	72	42	1	3024

DC1 - Noncomposite Dead Loads: Stringers, Diaphragms, Stiffeners, Spirals, Bolts, Deck

Total Sum 352798 lb

Weight per ft per girder = sum/(S)(L) 0.98 K/ft

M DC1	635.0	Kip-ft
V DC1	35.3	Kip

DC2 - Composite Dead Loads: Guard Rail, Sidewalk

Total Sum 70668 lb

Weight per ft per girder = sum/(S)(L) 0.20 K/ft

M DC2	127.2	Kip-ft
V DC2	7.1	Kip

DW - Wearing Surface, existing utilities, proposed utilities

Total Sum 123768 lb

Weight per ft per girder = sum/(S)(L) 0.344 K/ft

M Dw	222.8	Kip-ft
V Dw	12.4	Kip

Conc unit wt	0.145	k/ft^3	presumed for N calculation
Ed	3155.9	ksi	
N	9.2		
Kg			

Ixx	13582.4	Moment of Inertia for Beam and Cover Plate
A	61.0	A beam plus A plate
eg	25.2	na of built up steel section to na of deck
Kg	480133.9	

Complete Hand Calcs for gm and gv per LRFD design Table 4.6.2.2.2d-1 and 4.6.2.2.3b-1 and special analysis loading per 4.6.2.2d , enter governing g

gm	0.686	Governs
gv	0.686	Governs
Lane Mll+IM	1800 kip-ft	Live Load Moment plus impact per lane - AASHTO HL-93 at Inventory Level
Lane Vll+IM	107 kips	Live Load Shear plus Impact per lane - AASHTO HL-92 at Inventory Level
Girder Mll+IM	1235 kip-ft	Live load Moment plus impact per girder
Girder Vll+IM	73 kips	Live load Shear plus impact per girder

Simple Span Composite Steel Girder Bridges

Clarendon River Bridge - USBR4 BR4-3

Load and Resistance Factor Rating per

AASHTO Manual for Bridge Evaluation
Second Edition 2011 with Interim Rev Through 2014

Superstructure Evaluation of:

Existing Girders, both Interior and Exterior as Noted

Span	110	ft	
Year	1958	Approximate	
Material	ASTM A373-56T		
Fy	33	ksi	
F'c	3	ksi	
Condition	Good		Conservatively a condition factor for Fair is used
Riding Surface	Good		
Skew	30°		
Framing	Cross Frames with Top and Bottom Chords, interior spacing 22'-0" c.c.		

Analysis is applicable to superstructure, no analysis was completed for Substructure.

Rating Factors (RF) are calculated for the Inventory Level - Strength 1 Limit State for Flexure and for Shear
Live Load effects are included for the AASHTO Design HL-93 design load

Analysis is first performed by conservatively leaving out the effects of the haunch depth
The haunch is included in the analysis only if necessary to demonstrate RF>1

Note A - Rating Factors are calculated first for the Existing Bridge with utilities that were observed in place
Note B - Rating Factors are calculated for the Existing Bridge with existing and PROPOSED utilities in place

		Rating Factor A "Existing"	Rating Factor B "Proposed"
Interior Girder	Flexural Rating Factor	1.054	1.038
Interior Girder	Shear Rating Factor	1.383	1.370
Exterior Girder	Flexural Rating Factor	1.048	1.033
Exterior Girder	Shear Rating Factor	1.499	1.484

It is thought reasonable to consider the proposed utilities based on a Rating Factor in all cases greater than 1

Clarendon River Bridge-USBR4 B4-4 Interior Girder: Existing Condition with Proposed Utilities B

Beam Information		Built Up beam
db	62.50	
tf top	0.88	
bf top	20.00	
tw	0.38	
tf bottom	1.63	
bf bottom	20.00	
Ab	73.72	
Ig	6750.00	web plate
D	60.00	web depth
A1f top	17.50	Area of top flange
A2w web	22.50	Area of web
A3f bottom	32.50	Area of bottom flange
Fyc	33.00	yield stress of compression flange (top flange)
Fyw	33.00	yield stress of web
Fyt	33.00	yield stress of bottom flange
Es, Eb	29000.00	Steel modulus
d1	62.0625	from bottom of bottom flange to center of top flange
d2	31.625	from bottom of bottom flange to center of web
d3	0.8125	from bottom of bottom flange to center or bottom flange

Non-Composite Beam Section Properties

y bar	25.16	na location of steel beam alone from bottom of bottom flange
c1	36.90	na to center of area 1 at top flange
c2	6.47	na to center of area 2 at web
c3	24.35	na to center of area 3 at bottom flange
cs1	37.34	na to top of steel
cs3	25.16	na to bottom of steel
Ixx	50787.84	Steel section moment of inertia
Stop	1360.13	
Sbottom	2018.64	

Composite Section Properties

S=	7	ft	Stringer or Girder Spacing
Overhang=	42	inches	Width of Overhang or half of distance to next girder if no overhang is present
N=	9		Modular Ratio, concrete transformed to steel
f'c	3	ksi	Concrete compressive strength

Section	Effective Width in	Transformed Width	Depth in	Transformed Area Ai	yi	Ai*yi	yi-ybar	Ai*(yi-ybar)^2
Deck	84	9.33	7.5	70	69.75	4882.5	21.46636	32256.33
Haunch	28	3.11	3.5	10.89	64.25	699.61111	15.96636	2775.847
Top Flange				17.50	62.0625	1086.0938	13.77886	3322.498
Web				22.50	31.625	711.5625	16.65864	6243.98
Bott Flange				32.50	0.8125	26.40625	47.47114	73239.04
				153.3888889		7406.1736		117837.7

y bar transformed Section	48.28
Ixx total	124587.69
y stop	14.22
y bottom	48.28
Stop	8763.68
Sbottom	2580.33

Proceed initially presuming that section is compact, then later check that section meets compact criteria and use these values for comparison

Locate Plastic Neutral Axis of Composite Section and Plastic Forces in individual sections of composite plastic section

y bot flange	0.81	Distance from bottom of web to center of force of bottom flange plate			
Ps	1606.5	Concrete Force	Crb	0.8	Ratio
Pc	577.5	Top Flange Force			
Pw	742.5	Web Force			
Pt	1072.5	Bottom Flange and Cover Plate Force			

Review these forces in LRFD Design Appendix D6.1 Table D6.1 to see which case is applicable for formulas for y bar and Mp
This section, case II is applicable

y bar	0.60	Enter applicable formula and solve from Table LRFD Design D6.1	
D/tw	160.00	Check that it is less than 150	If this is not the case see limitations and additional calculations below
Dp	11.60	Depth from top of concrete to neutral axis of plastic section	
Dt	73.50	Total depth of composite section	
Dp/Dt	0.16	Ratio	
ds	7.85	pna to center of concrete effective width force	
dc	0.16	pna to center of top flange force	
dw	30.28	pna to center of web force	
dt	61.09	pna to center of bottom flange plate group	
Mp	100750.30	kip-in	Mp from LRFD design Table D6.1
	8395.86	kip-ft	
Mn	8056.39	Examine LRFD design 6.10.7.1.2 with this ratio and select Mn	

Check if section meets compact criteria of 6.10.6.2.2

Applicable	If D/tw ratio exceeds 150 the web may not be compact and the following calculations apply:		
My	85150.87	kip-in	Limit Moment Capacity of Section to Yield Moment
	7095.91	Kip-ft	
Mn or My	7095.91	Kip-ft	Select Governing Moment Capacity Mn or My

Investigate nominal Shear capacity of section

	Unstiffened	
K un	5.00	Value of K for unstiffened webs
	74.24	Ratio 6.10.9.3.2-4 to compare with D/tw ratio C=1
	92.80	Ratio 6.10.9.3.2-5 second part, calculate C
	1.00	C per 6.10.9.3.2-4
	0.46	C per 6.10.9.3.2-5
	0.27	C per 6.10.9.3.2-6
	Stiffened	
	42.00	Spacing of Transverse Stiffeners (in)
K stiff	15.20	Value of K for Stiffened webs
	129.46	Ratio 6.10.9.3.2-4 to compare with D/tw ratio C=1
	161.83	Ratio 6.10.9.3.2-5 second part, calculate C
	1.00	C per 6.10.9.3.2-4
	0.81	C per 6.10.9.3.2-5
	0.82	C per 6.10.9.3.2-6
C	0.81	Enter applicable C — C (factor) for shear, not Capacity
Vn	348.83	Kips
ϕf, ϕv	1.00	
ϕc	0.95	
ϕs	1.00	
ϒ DC	1.25	
ϒ DW	1.25	Note that deck thickness was field measured, so this factor is updated per MBE 6A.2.2.3
ϒ LL	1.75	
C Mom	6741.11	Moment Capacity
RF Mom	1.038	Rating Factor Moment
C Shear	331.39	Shear Capacity
RF Shear	1.370	Rating Factor Shear

Clarendon River Bridge-USBR4 B4-4 | Interior Girder: Existing Condition with Proposed Utilities B

Determine weight of structure | Look at Girder Group G1, G2, G3, G3, G4

Concrete unit weight	154	lb/ft^3	Presume higher unit weight for DL calcs
Metal unit weight	490	lb/ft^3	
	0.284	lb/in^3	
Number of Girders this group S	5	Girders	
Stringer Length cl bearing to cl bearing L	110	ft	
Eb	29000	Modulus for Steel Beam	
f'c	3	ksi	Presumed for concrete

		Piece Mark	b in	d in	Length ft	Length in	Volume in^3	Weight/ft lb	Piece Wt lb	Number Pieces	Total Weight
Girder G1	Web	a	0.38	60.000	36.9	442.8	9963.00		2825.2	1.00	2825.16
	Web	b	0.38	60.000	37.2	446.4	10044.00		2848.1	1.00	2848.13
	Web	c	0.38	60.000	37.0	444.0	9990.00		2832.8	3.00	8498.44
	Top Flange	d	20.00	1.125	78.9	946.8	21303.00		6040.8	1.00	6040.78
	Top Flange	e	20.00	1.125	32.3	387.0	8707.50		2469.1	1.00	2469.14
	Bottom Flange 1	f	20.00	1.125	23.0	276.0	6210.00		1760.9	1.00	1760.94
	Bottom Flange 2	g	20.00	1.750	65.0	780.0	27300.00		7741.3	1.00	7741.32
	Bottom Flange 3	ah	20.00	1.125	23.0	276.0	6210.00		1760.9	1.00	1760.94
	Stiff	m	8.000	0.500	5.0	60.0	240.00		68.1	50	3403
	Stiff	n	8.000	0.500	5.0	60.0	240.00		68.1	4	272
	Bent pl	varies	7.000	0.438	1.5	18.0	55.13		15.6	8	125
Girder G2	Web	a	0.38	60.000	36.9	442.8	9963.00		2825.2	1.00	2825.16
	Web	b	0.38	60.000	37.2	446.4	10044.00		2848.1	1.00	2848.13
	Web	c	0.38	60.000	37.0	444.0	9990.00		2832.8	3.00	8498.44
	Top Flange	d	20.00	0.875	78.9	946.8	16569.00		4698.4	1.00	4698.39
	Top Flange	e	20.00	0.875	32.3	387.0	6772.50		1920.4	1.00	1920.44
	Bottom Flange 1	f	20.00	0.875	19.6	235.2	4116.00		1167.2	1.00	1167.15
	Bottom Flange 2	g	20.00	1.625	72.0	864.0	28080.00		7962.5	1.00	7962.50
	Bottom Flange 3	bc	20.00	0.875	19.5	234.0	4095.00		1161.2	1.00	1161.20
	Stiff	m2	8.000	0.500	5.0	60.0	240.00		68.1	46	3131
	Stiff	n2	8.000	0.500	5.0	60.0	240.00		68.1	8	544
	Bent pl	varies	7.000	0.438	1.5	18.0	55.13		15.6	16	250
Girder G3	Similar to G2										35007
Girder G3	Similar to G2										35007
Girder G4	Web	a2	0.38	60.000	36.9	442.8	9963.00		2825.2	1.00	2825.16
	Web	b2	0.38	60.000	37.2	446.4	10044.00		2848.1	1.00	2848.13
	Web	c2	0.38	60.000	37.0	444.0	9990.00		2832.8	3.00	8498.44
	Top Flange	h	20.00	1.000	78.9	946.8	18936.00		5369.6	1.00	5369.58
	Top Flange	k	20.00	1.000	32.3	387.0	7740.00		2194.8	1.00	2194.79
	Bottom Flange 1	m	20.00	1.000	23.0	275.4	5508.00		1561.9	1.00	1561.88
	Bottom Flange 2	n	20.00	1.625	65.0	780.0	25350.00		7188.4	1.00	7188.37
	Bottom Flange 3	bd	20.00	1.000	23.0	275.4	5508.00		1561.9	1.00	1561.88
	Stiff	m2	8.000	0.500	5.0	60.0	240.00		68.1	46	3131
	Stiff	n2	8.000	0.500	5.0	60.0	240.00		68.1	8	544
	Bent pl	varies	7.000	0.438	1.5	18.0	55.13		15.6	16	250
Spirals	Shear Connectors				550			5			2750
Cross Frame	Outside	CF6I							575	4	2300
Cross Frame	Interior	CF7I							575	4	2300
Cross Frame	Middle	CF8	Half of frame weight Included						259	4	1036
Cross Frame			End frames and those directly over bearings not included								
Bolts	1/2 total bolt count								1	668	668
			Width	Thickness	Length						
Deck			34.33	0.625	110					1	363469
Haunch			2.33	0.417	110					5	82295
			Width	Thickness	Length						
Sidewalk (DC2)	DC2		6.25	1	110					1	105875
								Wt per ft			

Guard Rail	DC2			110	19	1	2090
Wearing Surface	DW1	28	0.29167	110		1	138345
Note heavier as-built condition of wearing surface from field measurements and corresponding adjustment of load factors							
Existing Utility	DW2			110	33	1	3630
Proposed Utility	DW3			110	155.4	1	17094

DC1 - Noncomposite Dead Loads: Stringers, Diaphragms, Stiffeners, Spirals, Bolts, Deck

Total Sum 633556

Weight per ft per girder = sum/(S)(L) 1.15

M DC1	1742.3	Kip-ft
V DC1	63.4	Kip

DC2 - Composite Dead Loads: Guard Rail, Sidewalk

Total Sum 107965

Weight per ft per girder = sum/(S)(L) 0.20

M DC2	296.9	Kip-ft
V DC2	10.8	Kip

DW - Wearing Surface, existing utilities, proposed utilities

Total Sum 159069

Weight per ft per girder = sum/(S)(L) 0.289

M Dw	437.4	Kip-ft	
V Dw	15.9	Kip	
Conc unit wt	0.145	k/ft^3	presumed for N calculation
Ed	3155.9	ksi	
N	9.2		
Ixx	50787.8		Moment of Inertia for Girder
A	73.7		Area of entire Girder steel section
eg	44.6		na of built up steel section to na of deck
Kg	1813590.0		
S	7	ft	Enter applicable table 4.6.2.2b-1 or d-1 for distibution formula, calculate by hand, enter
L	110	ft	
Kg/12Lts^3	3.257		Interior Girder
gm1	0.433		One lane loaded
gm2	0.615		two lanes loaded
gm	0.615		Governs
gv1	0.640		One lane loaded
gv1	0.743		two lanes loaded
gv	0.743		Governs
Lane Mll+IM	3264	kip-ft	Live Load Moment plus impact per lane - AASHTO HL-93 at Inventory Level
Lane Vll+IM	123	kips	Live Load Shear plus impact per lane - AASHTO HL-92 at Inventory Level
Girder Mll+IM	2008	kip-ft	Live load Moment plus impact per girder
Girder Vll+IM	91	kips	Live load Shear plus impact per girder

Clarendon River Bridge-USBR4 B4-4 Exterior Girder: Existing Condition with Proposed Utilities B

Beam Information		Built Up beam
db	62.88	
tf top	1.13	
bf top	20.00	
tw	0.38	
tf bottom	1.75	
bf bottom	20.00	
Ab	81.31	
Ig	6750.00	web plate
D	60.00	web depth
A1f top	22.50	Area of top flange
A2w web	22.50	Area of web
A3f bottom	35.00	Area of bottom flange
Fyc	33.00	yield stress of compression flange (top flange)
Fyw	33.00	yield stress of web
Fyt	33.00	yield stress of bottom flange
Es, Eb	29000.00	Steel modulus
d1	62.3125	from bottom of bottom flange to center of top flange
d2	31.75	from bottom of bottom flange to center of web
d3	0.875	from bottom of bottom flange to center or bottom flange

Non-Composite Beam Section Properties

y bar	26.84	na location of steel beam alone from bottom of bottom flange
c1	35.47	na to center of area 1 at top flange
c2	4.91	na to center of area 2 at web
c3	25.96	na to center of area 3 at bottom flange
cs1	36.04	na to top of steel
cs3	26.84	na to bottom of steel
Ixx	59200.49	Steel section moment of inertia
Stop	1642.76	
Sbottom	2205.85	

Composite Section Properties

S=	7	ft	Stringer or Girder Spacing
Overhang=	37.5	inches	Width of Overhang or half of distance to next girder if no overhang is present
N=	9		Modular Ratio, concrete transformed to steel
f'c	3	ksi	Concrete compressive strength

Section	Effective Width in	Transformed Width	Depth in	Transformed Area Ai	yi	Ai*yi	yi-ybar	Ai*(yi-ybar)^2
Deck	79.5	8.83	7.5	66.25	70.125	4645.7813	22.41875	33297.28
Haunch	28	3.11	3.5	10.88888889	64.625	703.69444	16.91875	3116.881
Top Flange				22.50	62.3125	1402.0313	14.60625	4800.208
Web				22.50	31.75	714.375	15.95625	5728.542
Bott Flange				35.00	0.875	30.625	46.83125	76760.81
				157.1388889		7496.5069		123703.7

y bar transformed Section	47.71
Ixx total	130453.71
y stop	15.17
y bottom	47.71
Stop	8600.16
Sbottom	2734.52

Proceed initially presuming that section is compact, then later check that section meets compact criteria and use these values for comparison

Locate Plastic Neutral Axis of Composite Section and Plastic Forces in individual sections of composite plastic section

y bot flange	0.88	Distance from bottom of web to center of force of bottom flange plate			
Ps	1520.4375	Concrete Force	Crb	0.8	Ratio
Pc	742.5	Top Flange Force			
Pw	742.5	Web Force			

Pt	1155	Bottom Flange and Cover Plate Force

Review these forces in LRFD Design Appendix D6.1 Table D6.1 to see which case is applicable for formulas for y bar and Mp
This section, case II is applicable

y bar	0.85	Enter applicable formula and solve from Table LRFD Design D6.1
D/tw	160.00	Check that it is less than 150. If this is not the case see limitations and additional calculations below
Dp	11.85	Depth from top of concrete to neutral axis of plastic section
Dt	73.88	Total depth of composite section
Dp/Dt	0.16	Ratio
ds	8.10	pna to center of concrete effective width force
dc	0.29	pna to center of top flange force
dw	30.28	pna to center of web force
dt	61.15	pna to center of bottom flange plate group
Mp	105686.36	kip-in Mp from LRFD design Table D6.1
	8807.20	kip-ft
Mn	8434.94	Examine LRFD design 6.10.7.1.2 with this ratio and select Mn

Check if section meets compact criteria of 6.10.6.2.2

Applicable If D/tw ratio exceeds 150 the web may not be compact and the following calculations apply:

My	90239.17	kip-in Limit Moment Capacity of Section to Yield Moment
	7519.93	Kip-ft
Mn or My	7519.93	Kip-ft Select Governing Moment Capacity Mn or My

Investigate nominal Shear capacity of section

Unstiffened

K un	5.00	Value of K for unstiffened webs
	74.24	Ratio 6.10.9.3.2-4 to compare with D/tw ratio C=1
	92.80	Ratio 6.10.9.3.2-5 second part, calculate C
	1.00	C per 6.10.9.3.2-4
	0.46	C per 6.10.9.3.2-5
	0.27	C per 6.10.9.3.2-6

Stiffened

	42.00	Spacing of Transverse Stiffeners (in)
K stiff	15.20	Value of K for Stiffened webs
	129.46	Ratio 6.10.9.3.2-4 to compare with D/tw ratio C=1
	161.83	Ratio 6.10.9.3.2-5 second part, calculate C
	1.00	C per 6.10.9.3.2-4
	0.81	C per 6.10.9.3.2-5
	0.82	C per 6.10.9.3.2-6
C	0.81	Enter applicable C C (factor) for shear, not Capacity
Vn	348.83	Kips
ϕf, ϕv	1.00	
ϕc	0.95	
ϕs	1.00	
ϒ DC	1.25	
ϒ DW	1.25	Note that deck thickness was field measured, so this factor is updated per MBE 6A.2.2.3
ϒ LL	1.75	
C Mom	7143.93	Moment Capacity
RF Mom	1.033	Rating Factor Moment
C Shear	331.39	Shear Capacity
RF Shear	1.484	Rating Factor Shear

Clarendon River Bridge-USBR4 B4-4 | Exterior Girder: Existing Condition with Proposed Utilities B

Determine weight of structure | Look at Girder Group G1, G2, G3, G3, G4

Concrete unit weight	154	lb/ft^3	Presume higher unit weight for DL calcs
Metal unit weight	490	lb/ft^3	
	0.284	lb/in^3	
Number of Girders this group S	5	Girders	
Stringer Length cl bearing to cl bearing L	110	ft	
Eb	29000	Modulus for Steel Beam	
f'c	3	ksi	Presumed for concrete

		Piece Mark	b in	d in	Length ft	Length in	Volume in^3	Weight/ft lb	Piece Wt lb	Number Pieces	Total Weight
Girder G1	Web	a	0.38	60.000	36.9	442.8	9963.00		2825.2	1.00	2825.16
	Web	b	0.38	60.000	37.2	446.4	10044.00		2848.1	1.00	2848.13
	Web	c	0.38	60.000	37.0	444.0	9990.00		2832.8	3.00	8498.44
	Top Flange	d	20.00	1.125	78.9	946.8	21303.00		6040.8	1.00	6040.78
	Top Flange	e	20.00	1.125	32.3	387.0	8707.50		2469.1	1.00	2469.14
	Bottom Flange 1	f	20.00	1.125	23.0	276.0	6210.00		1760.9	1.00	1760.94
	Bottom Flange 2	g	20.00	1.750	65.0	780.0	27300.00		7741.3	1.00	7741.32
	Bottom Flange 3	ah	20.00	1.125	23.0	276.0	6210.00		1760.9	1.00	1760.94
	Stiff	m	8.000	0.500	5.0	60.0	240.00		68.1	50	3403
	Stiff	n	8.000	0.500	5.0	60.0	240.00		68.1	4	272
	Bent pl	varies	7.000	0.438	1.5	18.0	55.13		15.6	8	125
Girder G2	Web	a	0.38	60.000	36.9	442.8	9963.00		2825.2	1.00	2825.16
	Web	b	0.38	60.000	37.2	446.4	10044.00		2848.1	1.00	2848.13
	Web	c	0.38	60.000	37.0	444.0	9990.00		2832.8	3.00	8498.44
	Top Flange	d	20.00	0.875	78.9	946.8	16569.00		4698.4	1.00	4698.39
	Top Flange	e	20.00	0.875	32.3	387.0	6772.50		1920.4	1.00	1920.44
	Bottom Flange 1	f	20.00	0.875	19.6	235.2	4116.00		1167.2	1.00	1167.15
	Bottom Flange 2	g	20.00	1.625	72.0	864.0	28080.00		7962.5	1.00	7962.50
	Bottom Flange 3	bc	20.00	0.875	19.5	234.0	4095.00		1161.2	1.00	1161.20
	Stiff	m2	8.000	0.500	5.0	60.0	240.00		68.1	46	3131
	Stiff	n2	8.000	0.500	5.0	60.0	240.00		68.1	8	544
	Bent pl	varies	7.000	0.438	1.5	18.0	55.13		15.6	16	250
Girder G3	Similar to G2										35007
Girder G3	Similar to G2										35007
Girder G4	Web	a2	0.38	60.000	36.9	442.8	9963.00		2825.2	1.00	2825.16
	Web	b2	0.38	60.000	37.2	446.4	10044.00		2848.1	1.00	2848.13
	Web	c2	0.38	60.000	37.0	444.0	9990.00		2832.8	3.00	8498.44
	Top Flange	h	20.00	1.000	78.9	946.8	18936.00		5369.6	1.00	5369.58
	Top Flange	k	20.00	1.000	32.3	387.0	7740.00		2194.8	1.00	2194.79
	Bottom Flange 1	m	20.00	1.000	23.0	275.4	5508.00		1561.9	1.00	1561.88
	Bottom Flange 2	n	20.00	1.625	65.0	780.0	25350.00		7188.4	1.00	7188.37
	Bottom Flange 3	bd	20.00	1.000	23.0	275.4	5508.00		1561.9	1.00	1561.88
	Stiff	m2	8.000	0.500	5.0	60.0	240.00		68.1	46	3131
	Stiff	n2	8.000	0.500	5.0	60.0	240.00		68.1	8	544
	Bent pl	varies	7.000	0.438	1.5	18.0	55.13		15.6	16	250
Spirals	Shear Connectors				550			5			2750
Cross Frame	Outside	CF6I							575	4	2300
Cross Frame	Interior	CF7I							575	4	2300
Cross Frame	Middle	CF8	Half of frame weight included						259	4	1036
Cross Frame			End frames and those directly over bearings not included								
Bolts	1/2 total bolt count								1	668	668
			Width	Thickness	Length						
Deck			34.33	0.625	110					1	363469
Haunch			2.33	0.417	110					5	82295
			Width	Thickness	Length						
Sidewalk (DC2)	DC2		6.25	1	110					1	105875
								Wt per ft			

Guard Rail	DC2			110	19	1	2090
Wearing Surface	DW1	28	0.29167	110		1	138345
Note heavier as-built condition of wearing surface from field measurements and corresponding adjustment of load factors							
Existing Utility	DW2			110	33	1	3630
Proposed Utility	DW3			110	155.4	1	17094

DC1 - Noncomposite Dead Loads: Stringers, Diaphragms, Stiffeners, Spirals, Bolts, Deck — Total Sum: 633556

Weight per ft per girder = sum/(S)(L): 1.15

M DC1	1742.3	Kip-ft
V DC1	63.4	Kip

DC2 - Composite Dead Loads: Guard Rail, Sidewalk — Total Sum: 107965

Weight per ft per girder = sum/(S)(L): 0.20

M DC2	296.9	Kip-ft
V DC2	10.8	Kip

DW - Wearing Surface, existing utilities, proposed utilities — Total Sum: 159069

Weight per ft per girder = sum/(S)(L): 0.289

M Dw	437.4	Kip-ft
V Dw	15.9	Kip

Conc unit wt	0.145	k/ft^3	presumed for N calculation
Ed	3155.9	ksi	
N	9.2		
Kg			
Ixx	59200.5		Moment of Inertia for Girder
A	81.3		Area of entire Girder steel section
eg	43.3		na of built up steel section to na of deck
Kg	1944054.9		

Complete Hand Calcs for gm and gv per LRFD design Table 4.6.2.2.2d-1 and 4.6.2.2.3b-1 and special analysis loading per 4.6.2.2d , enter governing g

gm	0.686		Governs	
				lb
gv	0.686		Governs	K/ft
Lane MII+IM	3264	kip-ft	Live Load Moment plus impact per lane - AASHTO HL-93 at Inventory Level	
Lane VII+IM	123	kips	Live Load Shear plus impact per lane - AASHTO HL-92 at Inventory Level	
				lb
Girder MII+IM	2239	kip-ft	Live load Moment plus impact per girder	K/ft
Girder VII+IM	84	kips	Live load Shear plus impact per girder	

lb

K/ft

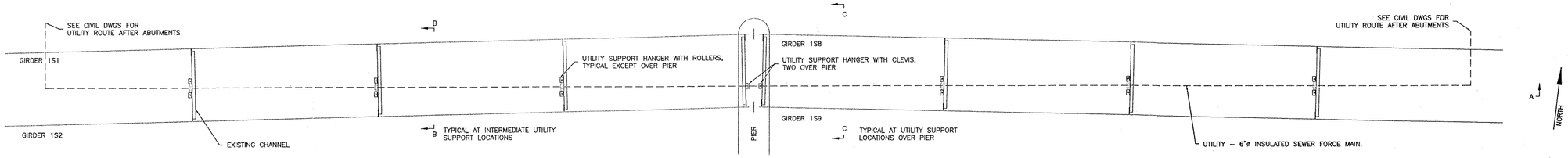

PLAN VIEW GIRDER 1S1, 1S2, 1S8 AND 1S9 – OUTSIDE BAY, NORTH SIDE – OTTER CREEK BRIDGE

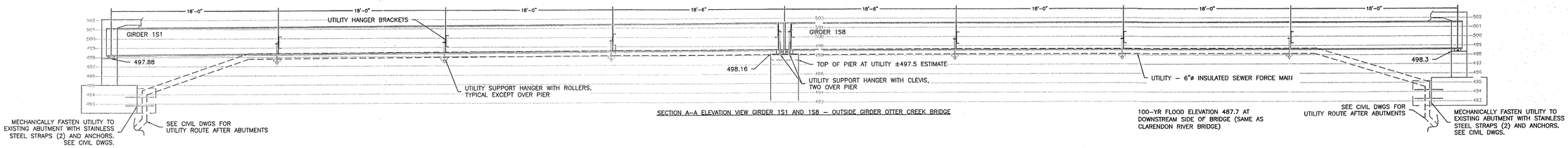

SECTION A–A ELEVATION VIEW GIRDER 1S1 AND 1S8 – OUTSIDE GIRDER OTTER CREEK BRIDGE

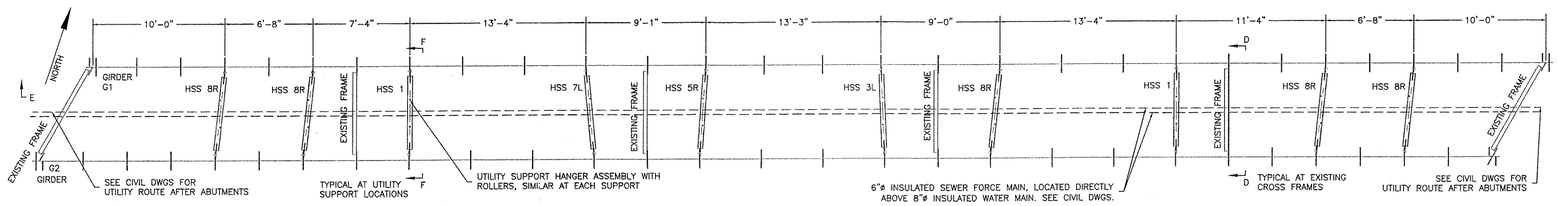

PLAN VIEW GIRDER G1 AND G2 – OUTSIDE BAY, NORTH SIDE – CLARENDON RIVER BRIDGE

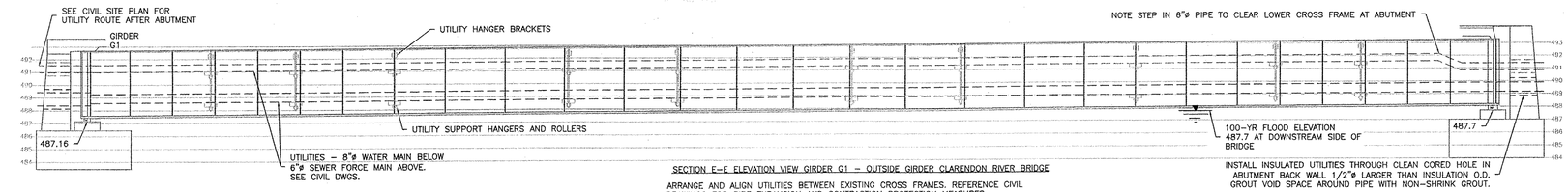

SECTION E–E ELEVATION VIEW GIRDER G1 – OUTSIDE GIRDER CLARENDON RIVER BRIDGE

ARRANGE AND ALIGN UTILITIES BETWEEN EXISTING CROSS FRAMES. REFERENCE CIVIL DRAWINGS FOR PIPE EXPANSION AND CONTRACTION PROTECTION MEASURES

S – SPACING BETWEEN STIFFENERS PRESUMED FROM PLANS, FIELD MEASURE

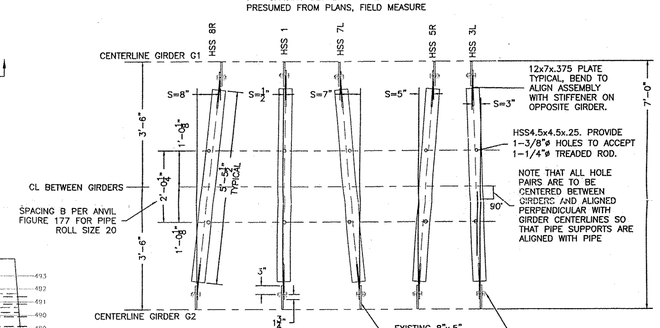

PIPE SUPPORT ASSEMBLIES FOR CLARENDON RIVER BRIDGE
FIELD MEASURE AND BEND PLATES PRIOR TO GALVANIZING.
NO HORIZONTAL SCALE. SEE PLAN VIEW FOR SUPPORT BRACKET LOCATIONS.
SEE SECTION F–F FOR ADDITIONAL DETAILS.

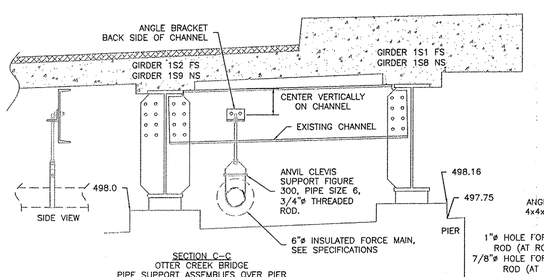

SECTION C–C
OTTER CREEK BRIDGE
PIPE SUPPORT ASSEMBLIES OVER PIER
SIMILAR BOTH CHANNELS – TOTAL 2

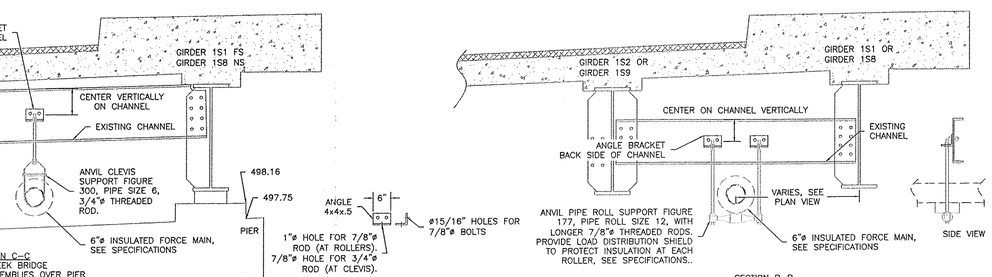

SECTION B–B
OTTER CREEK BRIDGE
PIPE SUPPORT ASSEMBLIES AT INTERMEDIATE LOCATIONS

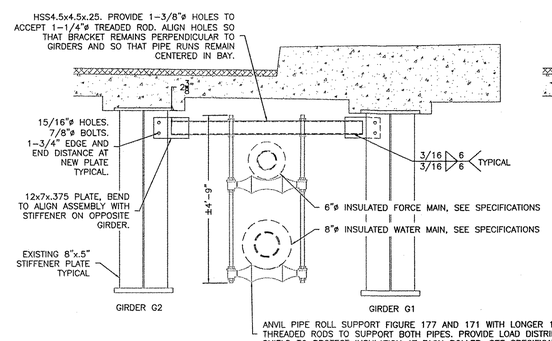

SECTION F–F
CLARENDON RIVER BRIDGE
UTILITY SUPPORT ASSEMBLIES
CONTRACTOR TO CONFIRM THAT THE PIPE ROLL SIZES ARE COMPATIBLE WITH THE PIPE INSULATION MATERIAL AND LOAD DISTRIBUTION SHIELDS CALLED OUT BY THE PROJECT SPECIFICATIONS.

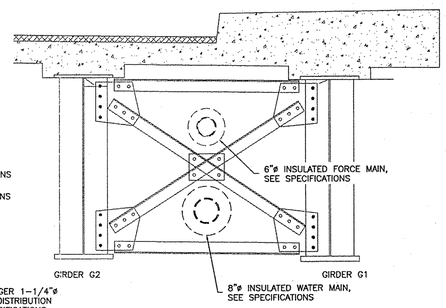

SECTION D–D
CLARENDON RIVER BRIDGE
PIPE LOCATIONS AT EXISTING INTERIOR CROSS BRACING, ADJUST SO THAT PIPES DO NOT LAY ON EXISTING INTERIOR CROSS FRAMES AND SO THAT PIPES CLEAR CROSS FRAMES AT ABUTMENT.

GENERAL NOTES:
FIELD CLEAN, PRIME AND PAINT NEW DRILLED HOLES BEFORE INSTALLING HANGERS.
ALL NEW MATERIAL TO BE HOT DIPPED GALVANIZED AFTER FABRICATION.
BOLTS GALVANIZED ASTM A325 7/8" DIAMETER WITH A563 NUTS AND F436 WASHERS. PRETENTION BY TURN OF THE NUT METHOD.
BRIDGE CAMBER IS NOT SHOWN, ADJUST SUPPORT ELEVATIONS AS NECESSARY TO ACCOMMODATE CAMBER.
NEW UTILITIES TO BE SUFFICIENTLY CONNECTED TO EXISTING ABUTMENTS SO THAT THEY CANNOT MOVE DOWNWARD OR EXERT LONGITUDINAL FORCE ON BRIDGE. SEE CIVIL DRAWINGS FOR NECESSARY DETAILS.
NEW UTILITIES TO HAVE SUFFICIENT JOINTS AND CONNECTIONS TO RESTRAIN INTERNAL FORCES AND TO RESOLVE EXPANSION AND CONTRACTION FORCES. SEE CIVIL DRAWINGS FOR NECESSARY DETAILS.
DIMENSIONS AND ELEVATIONS SHOWN ARE APPROXIMATE AND INTENDED FOR RELATIVE REFERENCE OF THE PROPOSED WORK. FIELD MEASURE AND ADJUST AS NECESSARY.
PIPE JOINTS TO BE LOCATED WITHIN 3 FEET OF A HANGER SUPPORT AND AT LEAST ONE HANGER IS TO BE PROVIDED PER PIPE SECTION.

REFERENCE SCALE OF ORIGINAL PAPER: 0" 1" 2" 3" 4"

PLAN AND PROFILE SCALE 3/16"=1'–0": 0" 5' 10' 15' 20'

DETAIL SCALE 1/2"=1'–0": 0" 12" 24" 36" 48"

404 East Main Street
P.O. Box 712
East Middlebury, VT 05740
Telephone: 802 382-8522
Fax: 802 382-8640
~
110 Merchants Row
4th Floor, Suite 15
Rutland, VT 05701
Telephone: 802 747-3080
Fax: 802 747-4820
~
E-mail: info@ottercrk.com

Project Partner:
HERITAGE ENGINEERING
Heritage Engineering, P.C.
P.O. Box 255
7290 VT Route 131, Suite 4A
Perkinsville, VT 05151
Ph/Fax (802) 263-5400
heritageengineering@tds.net
www.heritageengineeringvt.com

STAMP AND SIGNATURE:

STATE OF VERMONT — DAVID L. THURSTON — 04/24/2015 — NO. 8928 — STRUCTURAL — LICENSED PROFESSIONAL ENGINEER

DESIGN ENGINEER

THESE DRAWINGS SHALL NOT BE ALTERED IN ANY WAY WITHOUT THE WRITTEN APPROVAL OF THE ENGINEER. ANY REVISIONS SHALL BE MADE BY THE ENGINEER AND NOTED IN THE REVISION BLOCK. © 2015
OTTER CREEK ENGINEERING, INC.

TOWN OF WEST RUTLAND

ROUTE 4 WATER AND SEWER EXTENSIONS
CENTER RUTLAND, VERMONT

PERMITTING

DATE ISSUED:	4/27/15
REVISIONS:	
DRAWN BY:	DTH
CHECKED BY:	DTH
SCALE:	AS NOTED
PROJECT NO.:	168-017
CADD FILE:	

TITLE:
PROPOSED UTILITY CONNECTIONS TO EXISTING BRIDGES

DRAWING NO.
S-1