INDEX OF SHEETS

1. Title Sheet
2. Preliminary Information
3-4. Quantity Sheet
5. Tie Sheet
6. Layout Sheet
7. "B" Street Profile
8. Traffic Sign Summary
9. Boring Information Sheet
10. Boring Log
11. Plan and Elevation
12. General Notes
13. Miscellaneous Details
14. Typical Section & Deck Reinforcing
15. Framing Plan & Girder Elevation
16. Structural Steel Details
17. Bearing Details
18. Abutment No. 1 Details
19. Abutment No. 2 Details
20. Backwall Details & Corner Details
21. Footing Reiforcing Details
22. Wingwall #1 & #2 Details
23. Wingwall #4 Details
24. Reinforcing Steel Schedule
25. Utility layout
26. Utility Bridge Details
27. Utility Typical Details
28-35. "B" Street Cross Section Sheets
36-41. Main / "A" Street Cross Section Sheets
42-48. Erosion Control Plans

STATE OF VERMONT
AGENCY OF TRANSPORTATION

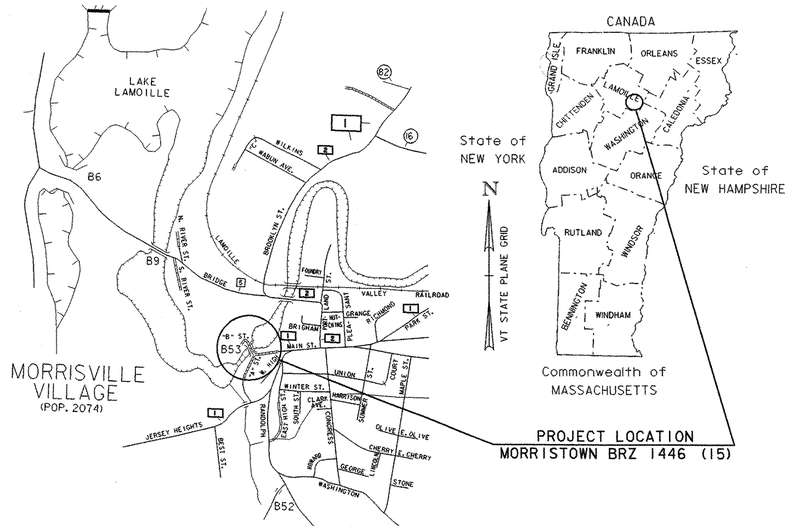

PROPOSED IMPROVEMENT
BRIDGE PROJECT

TOWN OF MORRISTOWN
COUNTY OF LAMOILLE
ROUTE NO : "B" STREET (CL 3) BRIDGE NO : 53

PROJECT LOCATION : BEGINNING AT THE INTERSECTION OF "B" STREET WITH MAIN STREET AND "A" STREET AND PROCEEDING NORTHWESTERLY ALONG "B" STREET FOR 0.025 MILES.

PROJECT DESCRIPTION : CONSTRUCTION OF A NEW STRUCTURE WITH RELATED ROADWAY APPROACH WORK.

LENGTH OF STRUCTURE : 103.00 FEET
LENGTH OF ROADWAY : 27.00 FEET
LENGTH OF PROJECT : 130.00 FEET

STANDARDS

B-5	6/1/94
E-100	1/2/04
E-100a	1/2/04
E-107	6/30/03
E-107a	8/8/95
E-121	8/8/95
E-141	9/20/95
E-143	6/15/04
E-160	5/20/99
E-191	2/1/99
G-1	1/3/00
G-1d	1/3/00
SB-R6-82	1/6/95

CONVENTIONAL SYMBOLS

COUNTY LINE
TOWN LINE
LIMITS OF ACCESS
POINT OF ACCESS
FENCE LINE
STONE WALL
TRAVELED WAY
GUARD RAIL
RAILROAD
SURVEY LINE
CULVERT
POWER POLE
TELEPHONE POLE
TREES
CONTROL OF ACCESS
PROPERTY LINE
R.O.W. TAKING LINE
SLOPE RIGHTS
TOP OF CUT
TOE OF SLOPE

SURVEYED BY : GILMAN
SURVEYED DATE : 4/89

DATUM
VERTICAL NGVD 1929
HORIZONTAL N/A

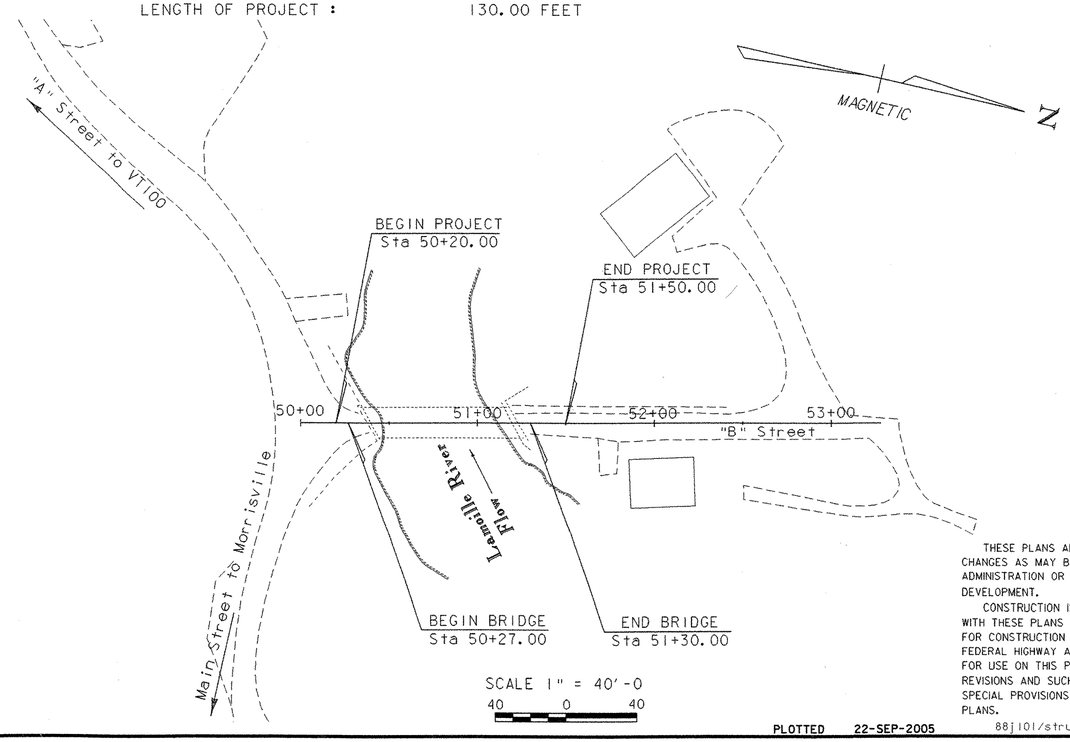

RECORD PLANS

CONTRACTOR: A.L. ST. ONGE CONTRACTOR, INC. – MONTGOMERY, VT
RESIDENT ENGINEER: JEFF COTA
CONSTRUCTION BEGAN:
CONSTRUCTION COMPLETE: NOVEMBER 2, 2006
RECORD PLANS BY: J. COTA & N GARBACIK

I HEREBY CERTIFY THAT ALL THE CONSTUCTION REQUIRED BY THIS SET OF DRAWINGS HAS BEEN ACCOMPLISHED AS INDICATED HEREIN.

BY _____ RESIDENT ENGINEER
DATE 11-03-08

NOTE: Any further information concerning final quantities, amounts or other details relative to this project may be found at Central Files in the electronic archives.

THESE PLANS ARE SUBJECT TO SUCH ENGINEERING CHANGES AS MAY BE REQUIRED BY THE FEDERAL HIGHWAY ADMINISTRATION OR THE DIRECTOR OF PROGRAM DEVELOPMENT.

CONSTRUCTION IS TO BE CARRIED ON IN ACCORDANCE WITH THESE PLANS AND THE STANDARD SPECIFICATIONS FOR CONSTRUCTION DATED 2001, AS APPROVED BY THE FEDERAL HIGHWAY ADMINISTRATION ON JANUARY 4, 2001 FOR USE ON THIS PROJECT, INCLUDING ALL SUBSEQUENT REVISIONS AND SUCH REVISED SPECIFICATIONS AND SPECIAL PROVISIONS AS ARE INCORPORATED IN THESE PLANS.

DIRECTOR OF PROGRAM DEVELOPMENT
APPROVED Richard Tetreault DATE 9/22/05

PROJECT MANAGER : CHRIS WILLIAMS

PROJECT NAME : MORRISTOWN
PROJECT NUMBER : BRZ 1446 (15)

SHEET 1 OF 48 SHEETS

PLOTTED 22-SEP-2005 88j101/structures/sj101bdr.dgn sj101tit.i

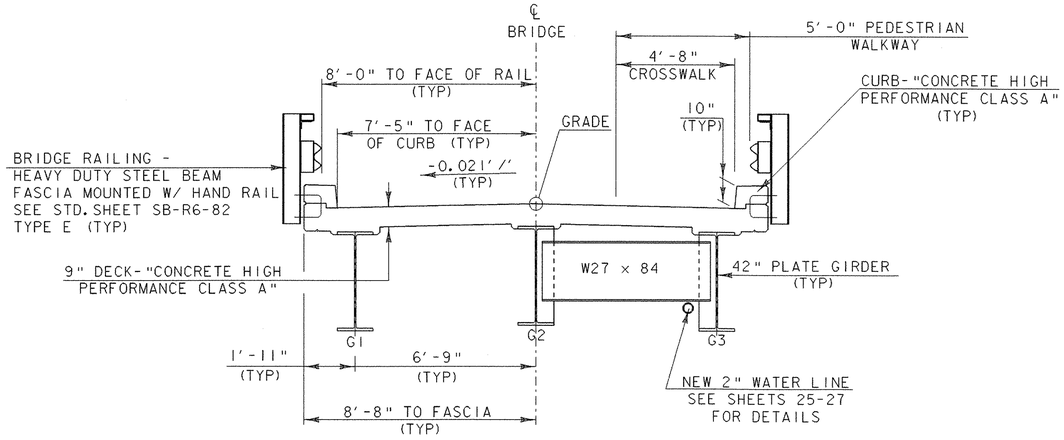

TYPICAL BRIDGE SECTION

SCALE 3/8" = 1'-0

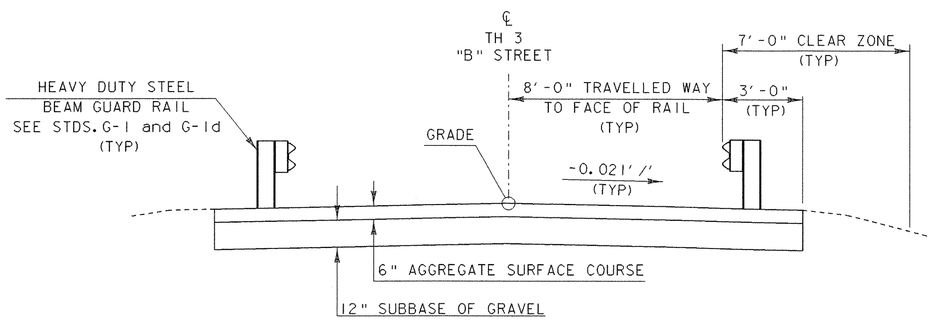

TYPICAL ROADWAY SECTION

SCALE 3/8" = 1'-0

MATERIAL ITEM	TOLERANCE
PAVEMENT	±1/4" TOTAL THICKNESS
AGGREGATE SURFACE COURSE	± 1/2"
BASE COURSE	± 1/2"
SUBBASE	± 1"
SAND BORROW	± 1"
GRANULAR BORROW	± 1"

FINAL HYDRAULICS REPORT

HYDROLOGIC DATA

DRAINAGE AREA: 239 sq. mi. (619 sq. km)
CHARACTER OF TERRAIN: Rolling hills to mountainous, mostly forested
CHARACTER & TYPE OF STREAM: The bridge spans a natural ledge gorge. The stream is straight.
NATURE OF STREAMBED: Ledge

Q2.33= 5950 cfs (168 cms) Q50= 16180 cfs (458 cms)
Q10= 9620 cfs (272 cms) Q100=19550 cfs (554 cms)
Q25= 12600 cfs (357 cms) Q500=33000 cfs (935 cms)

DATE OF FLOOD OF RECORD: November 1927
WATER SURFACE ELEV.: Unknown ESTIMATED DISCHARGE: Unknown
NATURAL STREAM VELOCITY @ Q25 = 31.0 fps (9.45 mps)
ICE CONDITIONS: Slight DEBRIS: Slight
DOES THE STREAM REACH MAXIMUM HIGHWATER ELEVATION RAPIDLY? No
IS ORDINARY RISE RAPID? No
IS STAGE AFFECTED BY UPSTREAM OR DOWNSTREAM CONDITIONS? Yes
IF YES, DESCRIBE. The Morrisville Dam is about 150' (45 m) upstream. Operation of the dam can affect the hydraulics at the bridge.
WATERSHED STORAGE 2% HEADWATERS ___ UNIFORM THROUGHOUT WATERSHED X IMMEDIATELY ABOVE SITE ___

EXISTING STRUCTURE

STRUCTURE TYPE: Single span steel pony truss bridge YEAR BUILT: 1900
CLEAR SPAN (NORMAL TO STREAM): 70 ft. (21.3 m)
VERTICAL CLEARANCE ABOVE STREAMBED: 28 ft. (8.5 m)
WATERWAY OF FULL OPENING: 1800 sq. ft. (167 sq. m)
DISPOSITION OF STRUCTURE: Truss already removed, abutments remain

TYPE OF MATERIAL UNDER SUBSTRUCTURE: Ledge

WATER SURFACE ELEV. @ Q2.33= 606.3 VELOCITY= 25.7 fps (7.8 mps)
Q10= 607.4 " = 29.0 fps (8.8 mps)
Q25= 608.3 " = 31.0 fps (9.5 mps)
Q50= 609.2 " = 32.8 fps (10.0 mps)
Q100= 610.0 " = 34.3 fps (10.5 mps)

LONG TERM STREAM BED CHANGES: None

IS THE ROADWAY OVERTOPPED BELOW THE Q100? No FREQUENCY: ___
RELIEF ELEVATION: ___ DISCHARGE OVER ROAD @ Q100: None

UPSTREAM STRUCTURE: TOWN: Morrisville DISTANCE: 900 ft. (274 m)
HIGHWAY NO.: Vt 100 STRUCTURE NO.: 215
STRUCTURE TYPE: Single span steel through truss bridge.
CLEAR SPAN: 120 ft (36.6 m) CLEAR HEIGHT: 15 ft (4.6 m)
YEAR BUILT: 1926 FULL WATERWAY: 1800 sq. ft. (167 sq. m)

DOWNSTREAM STRUCTURE: TOWN: Morrisville DISTANCE: 3000 ft. (914 m)
HIGHWAY NO.: TH 3 STRUCTURE NO.: 9
STRUCTURE TYPE: Two span plate girder bridge.
CLEAR SPAN: 270 ft (82.3 m) CLEAR HEIGHT: 22 ft (6.7 m)
YEAR BUILT: 1982 FULL WATERWAY: 5470 sq. ft. (508 sq. m)

PROPOSED STRUCTURE

STRUCTURE TYPE: Single span plate girder bridge

CLEAR SPAN (NORMAL TO STREAM): 97 ft (29.6 m)
VERTICAL CLEARANCE ABOVE STREAMBED: 28 ft (8.5 m)
WATERWAY OF FULL OPENING: 1900 sq. ft (177 sq. m)

WATER SURFACE ELEV. @ Q2.33= 606.3 VELOCITY= 25.7 fps (7.8 mps)
Q10= 607.4 " = 29.0 fps (8.8 mps)
Q25= 608.3 " = 31.0 fps (9.5 mps)
Q50= 609.2 " = 32.8 fps (10.0 mps)
Q100= 610.0 " = 34.3 fps (10.5 mps)

IS THE ROADWAY OVERTOPPED BELOW THE Q100? No FREQUENCY: N/A
RELIEF ELEVATION: N/A DISCHARGE OVER ROAD @ Q100: N/A

AVERAGE LOW ELEVATION OF SUPERSTRUCTURE: 621.4
VERTICAL CLEARANCE @ Q100 = 11.4 ft (3.47 m)

SCOUR: None, due to ledge.
REQUIRED CHANNEL PROTECTION: N.A., no channel work anticipated.

PERMIT INFORMATION

AVERAGE DAILY FLOW: 500 cfs (14.2 cms)
ORDINARY LOW WATER: 220 cfs (6.2 cms) DEPTH: 2.0 ft (0.6 m)
ORDINARY HIGH WATER: 2550 cfs (72.2 cms) DEPTH: 4.0 ft (1.2 m)

DESIGN CRITERIA:
1. DESIGN LIVE LOAD AASHTO HS - 25
2. DESIGN SPAN 99'-0"
3. ALLOWABLE LOAD FOR SPREAD FOOTINGS ON SOIL ----- ON LEDGE 10 KSI
4. ALLOWABLE LOAD FOR PILING ----- TYPE ----- ESTIMATED LENGTH -----
5. STRUCTURAL STEEL AASHTO GRADE M270 Gr 50W
6. REINFORCING STEEL GRADE 60
7. CONCRETE HIGH PERFORMANCE CLASS A f'c = 4000 Psi
   CONCRETE HIGH PERFORMANCE CLASS B f'c = 3500 Psi

TRAFFIC MAINTENANCE:
1. IS TRAFFIC TO BE MAINTAINED? NO IF YES, ON EXISTING STRUCTURE ----- OR ON TEMPORARY BRIDGE -----
2. TEMPORARY BRIDGE REQUIREMENTS: ONE OR TWO WAY ----- TRAFFIC CONTROL SIGNALS REQUIRED -----
   MINIMUM ----- -----
   ARE SIDEWALKS REQUIRED? ----- IF SO, ON WHAT SIDE? -----

LOAD FACTOR LOAD RATING (TONS)

LOADING LEVELS (LOAD FACTOR)	TRUCK						
	H	HS	3S2	6 AXLE	3A. STR.	4A. STR.	5A. SEMI
INVENTORY A=2.17; B=1.00	38	53					
POSTED A=1.55; B=1.40	53	74	88		70	71	81
OPERATING A=1.30; B=1.67		88	105	113	83	85	

STRENGTH RF= $\frac{\phi M_N - 1.3\, M_{DL}}{A \times M_{LL+I}}$ SERVICEABILITY RF= $B\left[\frac{.95\, F_Y S_{LL+I} - M_{DL}\frac{S_{LL+I}}{S_{DL}} - M_{SDL}\frac{S_{LL+I}}{S_{SDL}}}{1.67\, M_{LL+I}}\right]$

TRAFFIC DATA

YEAR	ADT	DHV	% D	% T	% ADTT
1992	10	-----	50	<1	--
2012	15	-----	50	<1	--

18 Kip ESAL for flexible pavement from --- to --- : ---
18 Kip ESAL for flexible pavement from --- to --- : ---
Design speed: 25 MPH

STATE OF VERMONT
AGENCY OF TRANSPORTATION

Town Of MORRISTOWN	Bridge No. 53
Highway No. "B" STREET	Log Sta. / Surv. Sta. 50+79
PRELIMINARY INFORMATION	
"B" STREET OVER THE LAMOILLE RIVER	
Designed By K.M. HIGGINS	Drawn By P.G. JARVIS
Checked By K.M. HIGGINS Date 9/98	Bridge Design Supervisor C.P. WILLIAMS Date 10/98
PROJECT MORRISTOWN	PROJECT NO. BRZ 1446 (15)
I.G.C. Info. 88j101/structures/sj101pi.dgn	sj101pi.i
Bridge Sheet No.	Sheet 2 of 48

PLOTTED 03-NOV-2005

STATE OF VERMONT
AGENCY OF TRANSPORTATION

QUANTITY SHEET

SUMMARY OF ESTIMATED QUANTITIES																	TOTALS			DESCRIPTIONS				DETAILED SUMMARY OF QUANTITIES		
Roadway				Super structure		Abutment #1		Abutment #2		Channel		Erosion Control		E & C Items		BRIDGE QUANTITY	ROUND	GRAND TOTAL	FINAL	UNIT	ITEMS		ITEM NUMBER	QUANTITIES	UNIT	ITEMS
1																		1		LS	CLEARING AND GRUBBING (INCL. INDIV. TREES & STUMPS)		201.10			
250																		250		CY	COMMON EXCAVATION		203.15			
						5		10										15		CY	SOLID ROCK EXCAVATION		203.16			
20																		20		CY	TRENCH EXCAVATION OF EARTH (MOD.)		204.20			
20												10						30		CY	TRENCH EXCAVATION OF EARTH		204.20			
						590		50										640		CY	STRUCTURE EXCAVATION		204.25			
						390		10										400		CY	GRANULAR BACKFILL FOR STRUCTURES		204.30			
150												10						160		CY	SUBBASE OF GRAVEL		301.15			
70																		70		CY	AGGREGATE SURFACE COURSE		401.10			
				65														65		CY	CONCRETE, HIGH PERFORMANCE CLASS A		501.33			
						160		20										180		CY	CONCRETE, HIGH PERFORMANCE CLASS B		501.34			
				61000														61000		LB	STRUCTURAL STEEL (PLATE GIRDER)		506.55			
						15710		1360										17070		LB	REINFORCING STEEL		507.15			
						98		48										146		LF	DRILLING AND GROUTING DOWELS		507.16			
				14450		660		890										16000		LB	EPOXY COATED REINFORCING STEEL		507.17			
				1														1		LS	SHEAR CONNECTORS (600 - 7/8" DIAMETER x 7")		508.15			
				20		14		2										36		GAL	WATER REPELLENT (MOD - SILANE)		514.10			
				212														212		LF	BRIDGE RAILING-HDSB / FASCIA MOUNTED/ HAND RAIL		525.43			
1																		1		EACH	REMOVAL OF STRUCTURE		529.15			
				6														6		EACH	BEARING DEVICE ASSEMBLY		531.10			
												5						5		HR	ALL PURPOSE EXCAVATOR RENTAL, TYPE I		608.25			
1																		1		TON	DUST & ICE CONTROL WITH CALCIUM CHLORIDE		609.15			
												10						10		CY	STONE FILL, TYPE I		613.10			
												10						10		CY	STONE FILL, TYPE I (MOD - CONSTRUCTION ENTRANCE)		613.10			
120																		120		LF	REMOVAL OF EXISTING CURB		616.41			
												180						180		LF	SNOW FENCE (MOD-PDF)		620.70			
243																		243		LF	HVY DUTY STEEL BEAM GUARD RAIL (GALVANIZED)		621.21			
4																		4		EACH	ANCHOR FOR STEEL BEAM RAIL		621.60			
1.2																		1.2		MFBM	INSULATION BOARD		622.10			
2																		2		EACH	GATE VALVE WITH VALVE BOX		629.27			
100																		100		LF	STEEL WATER PIPE, GALVANIZED-2" (MOD)		629.34			
1																		1		LS	TRANSFER TO NEW SYSTEM-WATER SYSTEM		629.42			
1																		1		LS	WATER MAIN ON BRIDGE (MOD 1 - Temp.)		629.60			
				1														1		LS	WATER MAIN ON BRIDGE - 2" (MOD 2)		629.60			
														1				1		LS	FIELD OFFICE-ENGINEERS		631.10			
														1				1		LS	TESTING EQUIPMENT - CONCRETE		631.16			
														1				1		LU	FIELD OFFICE - TELEPHONE (NABI)		631.25			
1																		1		LS	MOBILIZATION/DEMOBILIZATION		635.11			
				103														103		LF	CROSSWALK MARKING W/DIAGONAL LINE (MOD - 4'-5")		646.31			
												80						80		SY	GEOTEXTILE FOR SILT FENCE		649.51			
												10						10		LB	SEED		651.15			

PROJECT NAME: MORRISTOWN
PROJECT NUMBER: BRZ1446 (15)

FILE NAME: sj101qty.xls
PROJECT LEADER: C. P. WILLIAMS
DESIGNED BY: P. R. ROWE
QUANTITY SHEET #1

PLOT DATE: 10/28/2005
DRAWN BY: K. M. HIGGINS
CHECKED BY: R. S. YOUNG
SHEET 3 OF 48

STATE OF VERMONT
AGENCY OF TRANSPORTATION

QUANTITY SHEET

SUMMARY OF ESTIMATED QUANTITIES																	TOTALS			DESCRIPTIONS			DETAILED SUMMARY OF QUANTITIES		
Roadway				Super structure		Abutment #1		Abutment #2		Channel		Erosion Control		E & C Items		BRIDGE QUANTITY	ROUND	GRAND TOTAL	FINAL	UNIT	ITEMS	ITEM NUMBER	QUANTITIES	UNIT	ITEMS
												10						10		LB	SEED-WINTER RYE	651.17			
												100						100		LB	FERTILIZER	651.18			
												1						1		TON	AGRICULTURAL LIMESTONE	651.20			
												1						1		TON	HAYMULCH	651.25			
												50						50		EACH	HAYBALES FOR EROSION CONTROL	651.26			
												10						10		CY	TOPSOIL	651.35			
												1						1		LS	EROSION & SEDIMENT CONTROL PLAN	652.10			
												30						30		HR	MONITORING EROSION & SEDIMENT CONTROL	652.20			
												1						1		LU	FIELD MAINTENANCE OF EROSION & SEDIMENT CONTROL PLAN (NABI)	652.30			
11.25																		11.25		SF	TRAFFIC SIGNS. TYPE A	675.20			
28																		28		LF	FLANGED CHANNEL SIGN POST	675.301			
1																		1		EACH	REMOVING SIGNS	675.50			

PROJECT NAME: MORRISTOWN
PROJECT NUMBER: BRZ1446 (15)

FILE NAME: sj101qty.xls
PROJECT LEADER: C. P. WILLIAMS
DESIGNED BY: P. R. ROWE
QUANTITY SHEET #2

PLOT DATE: 10/28/2005
DRAWN BY: K. M. HIGGINS
CHECKED BY: R. S. YOUNG
SHEET 4 OF 48

TRAVERSE TIE INFORMATION

PT #1
IRON PIN

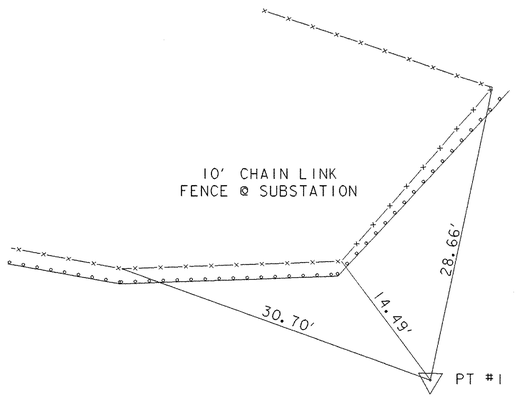

N: 10000.00 *
E: 50000.00 *

* COORDINATES ARE ASSUMED. ALL OTHER COORDINATES ARE RELATIVE TO PT #1

PT #2
IRON PIN

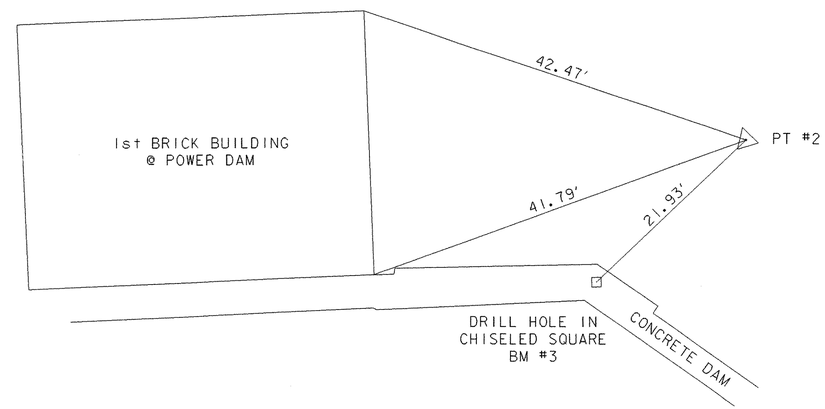

N: 10274.81
E: 50028.90

NEW ALIGNMENT TIE INFORMATION

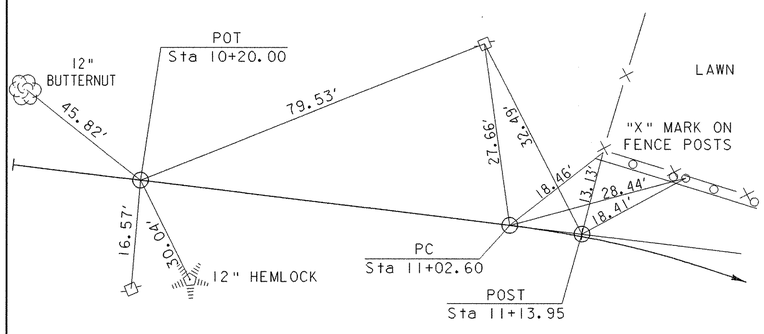

POT
N: 9853.83
E: 49911.38

DATUM
VERTICAL NGVD 1929
HORIZONTAL N/A

PC
N: 9925.58
E: 49952.29

POST
N: 9935.44
E: 49957.91

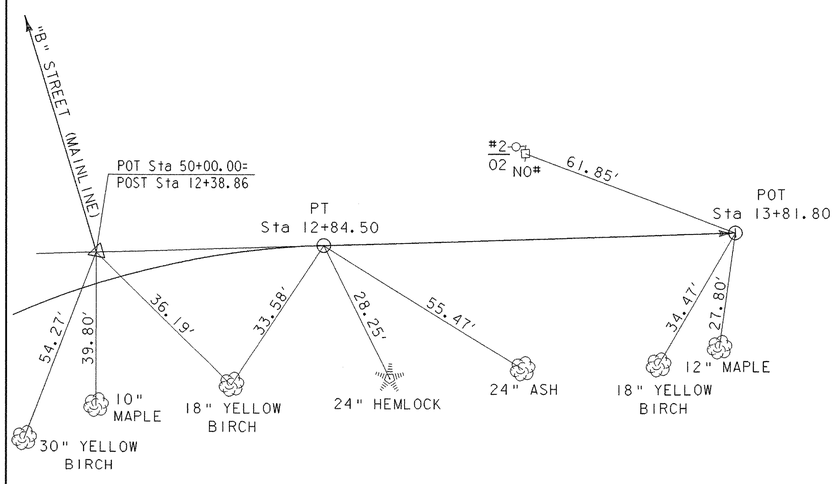

POST
N: 10011.80
E: 50057.58

PT
N: 10010.58
E: 50103.20

POT
N: 10008.03
E: 50200.42

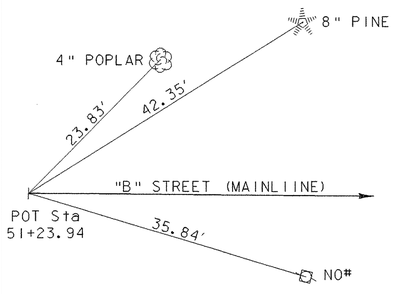

POT
N: 10132.28
E: 50028.50

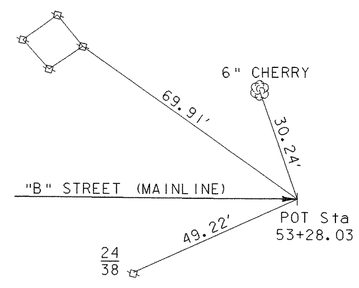

POT
N: 10330.67
E: 49980.62

ALL TIES SHOWN NOT TO SCALE

PROJECT: MORRISTOWN	PROJECT NO.: BRZ 1446 (15)
DESIGN FILE NAME: 88j101/structures/sj101tie.dgn	
IPARM FILE NAME: sj101tie.i	PLOT DATE: 03-NOV-2005
SURVEYED BY: GILMAN	SURVEY DATE: 4/89
SQUAD LEADER: C.P. WILLIAMS	DRAWN BY: P.G. JARVIS
TIE SHEET	SHEET: 5 OF 48

PLOTTED 03-NOV-2005

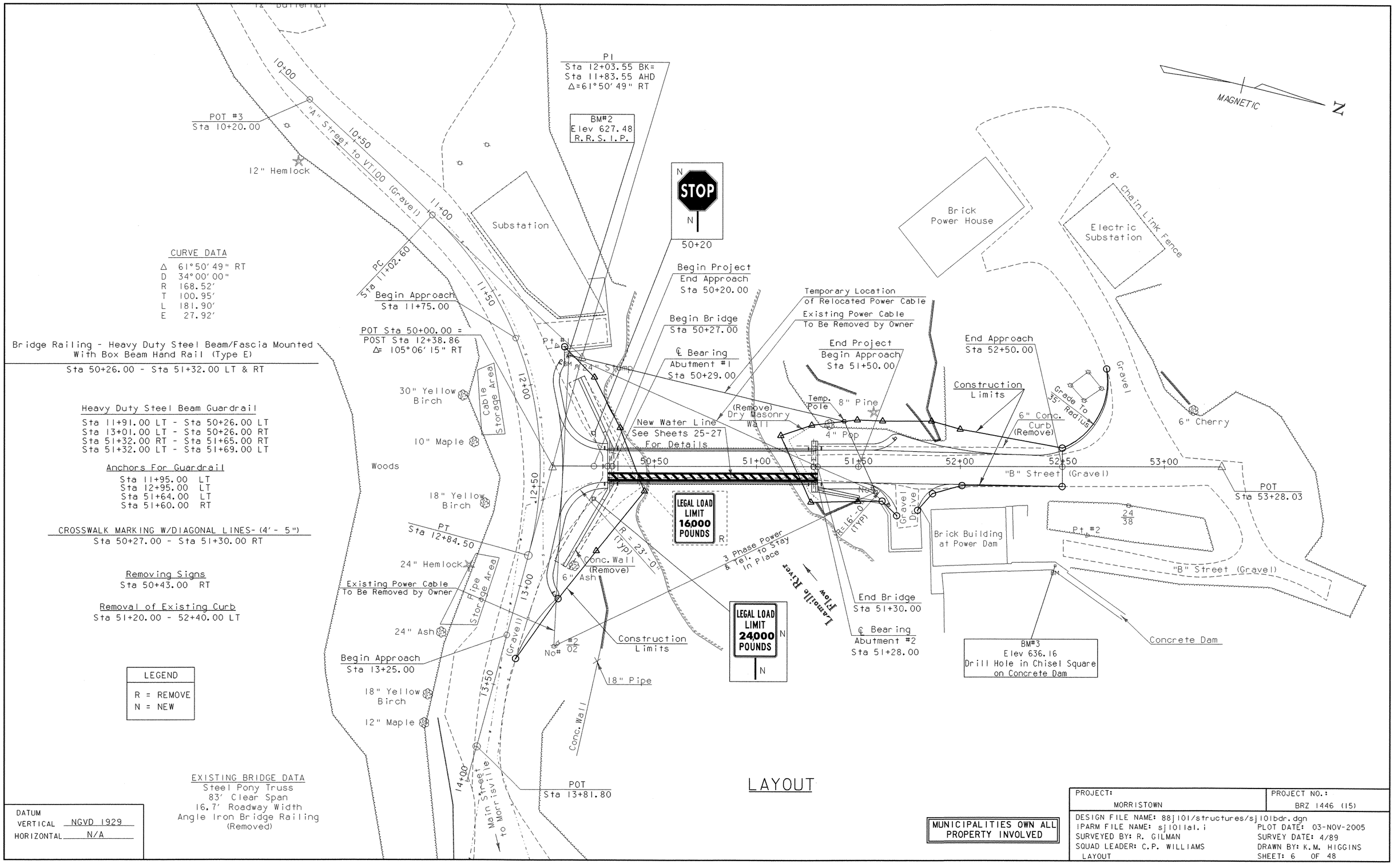
MAGNETIC
N
PI
Sta 12+03.55 BK=
Sta 11+83.55 AHD
Δ=61°50'49" RT
BM#2
Elev 627.48
R.R.S.I.P.
POT #3
Sta 10+20.00
12" Hemlock
"A" Street to VT100 (Gravel)
10+00
10+50
11+00
11+50
12+00
12+50
13+00
13+50
14+00
PC
Sta 11+02.60
Begin Approach
Sta 11+75.00
POT Sta 50+00.00 =
POST Sta 12+38.86
Δ= 105°06'15" RT
Substation
Brick
Power House
Electric
Substation
8' Chain Link Fence
Begin Project
End Approach
Sta 50+20.00
Begin Bridge
Sta 50+27.00
℄ Bearing
Abutment #1
Sta 50+29.00
Temporary Location
of Relocated Power Cable
Existing Power Cable
To Be Removed by Owner
End Project
Begin Approach
Sta 51+50.00
End Approach
Sta 52+50.00
Construction
Limits
Temp.
Pole
8" Pine
(Remove)
Dry Masonry
Wall
New Water Line
See Sheets 25-27
For Details
4" Pop
6" Conc.
Curb
(Remove)
Grade To
35' Radius
Gravel
6" Cherry
30" Yellow
Birch
Cable
Storage Area
10" Maple
Woods
18" Yellow
Birch
50+50
51+00
51+50
52+00
52+50
53+00
"B" Street (Gravel)
POT
Sta 53+28.03
Gravel
Drive
Brick Building
at Power Dam
24
38
Pt #2
"B" Street (Gravel)
PT
Sta 12+84.50
24" Hemlock
Existing Power Cable
To Be Removed by Owner
Pipe
Storage Area
24" Ash
Begin Approach
Sta 13+25.00
18" Yellow
Birch
12" Maple
Conc. Wall
(Remove)
6" Ash
R=23'-0"
(TYP)
R=16'-0"
(TYP)
3 Phase Power
& Tel. to Stay
In Place
Lamoille River
Flow
End Bridge
Sta 51+30.00
℄ Bearing
Abutment #2
Sta 51+28.00
Construction
Limits
18" Pipe
Conc. Wall
POT
Sta 13+81.80
Main Street
to Morrisville
BM#3
Elev 636.16
Drill Hole in Chisel Square
on Concrete Dam
Concrete Dam
STOP
50+20
LEGAL LOAD
LIMIT
16,000
POUNDS
LEGAL LOAD
LIMIT
24,000
POUNDS
CURVE DATA
Δ 61°50'49" RT
D 34°00'00"
R 168.52'
T 100.95'
L 181.90'
E 27.92'
Bridge Railing - Heavy Duty Steel Beam/Fascia Mounted
With Box Beam Hand Rail (Type E)
Sta 50+26.00 - Sta 51+32.00 LT & RT
Heavy Duty Steel Beam Guardrail
Sta 11+91.00 LT - Sta 50+26.00 LT
Sta 13+01.00 LT - Sta 50+26.00 RT
Sta 51+32.00 RT - Sta 51+65.00 RT
Sta 51+32.00 LT - Sta 51+69.00 LT
Anchors For Guardrail
Sta 11+95.00 LT
Sta 12+95.00 LT
Sta 51+64.00 LT
Sta 51+60.00 RT
CROSSWALK MARKING W/DIAGONAL LINES-(4'-5")
Sta 50+27.00 - Sta 51+30.00 RT
Removing Signs
Sta 50+43.00 RT
Removal of Existing Curb
Sta 51+20.00 - 52+40.00 LT
LEGEND
R = REMOVE
N = NEW
EXISTING BRIDGE DATA
Steel Pony Truss
83' Clear Span
16.7' Roadway Width
Angle Iron Bridge Railing
(Removed)
DATUM
VERTICAL NGVD 1929
HORIZONTAL N/A
LAYOUT
MUNICIPALITIES OWN ALL
PROPERTY INVOLVED
PROJECT:
MORRISTOWN
PROJECT NO.:
BRZ 1446 (15)
DESIGN FILE NAME: 88j101/structures/sj101bdr.dgn
IPARM FILE NAME: sj101lal.i
PLOT DATE: 03-NOV-2005
SURVEYED BY: R. GILMAN
SURVEY DATE: 4/89
SQUAD LEADER: C.P. WILLIAMS
DRAWN BY: K.M. HIGGINS
LAYOUT
SHEET: 6 OF 48

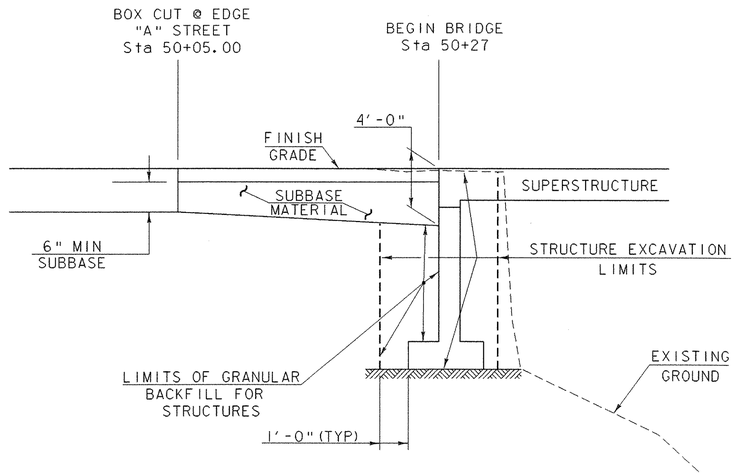

ABUTMENT NO. 1

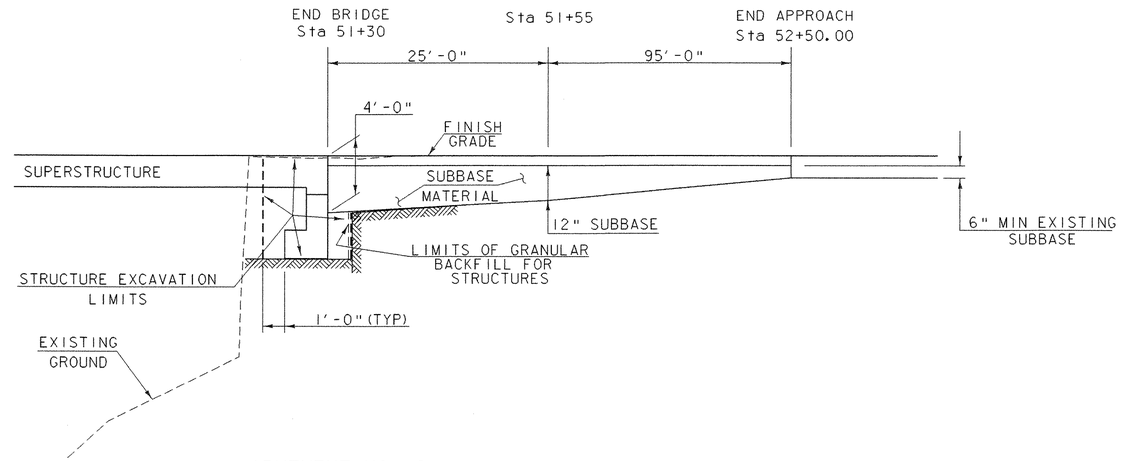

ABUTMENT NO. 2

ABUTMENT EARTHWORK DETAIL AND SUBBASE TAPER @ BEGIN/END PROJECT

(NOT TO SCALE)

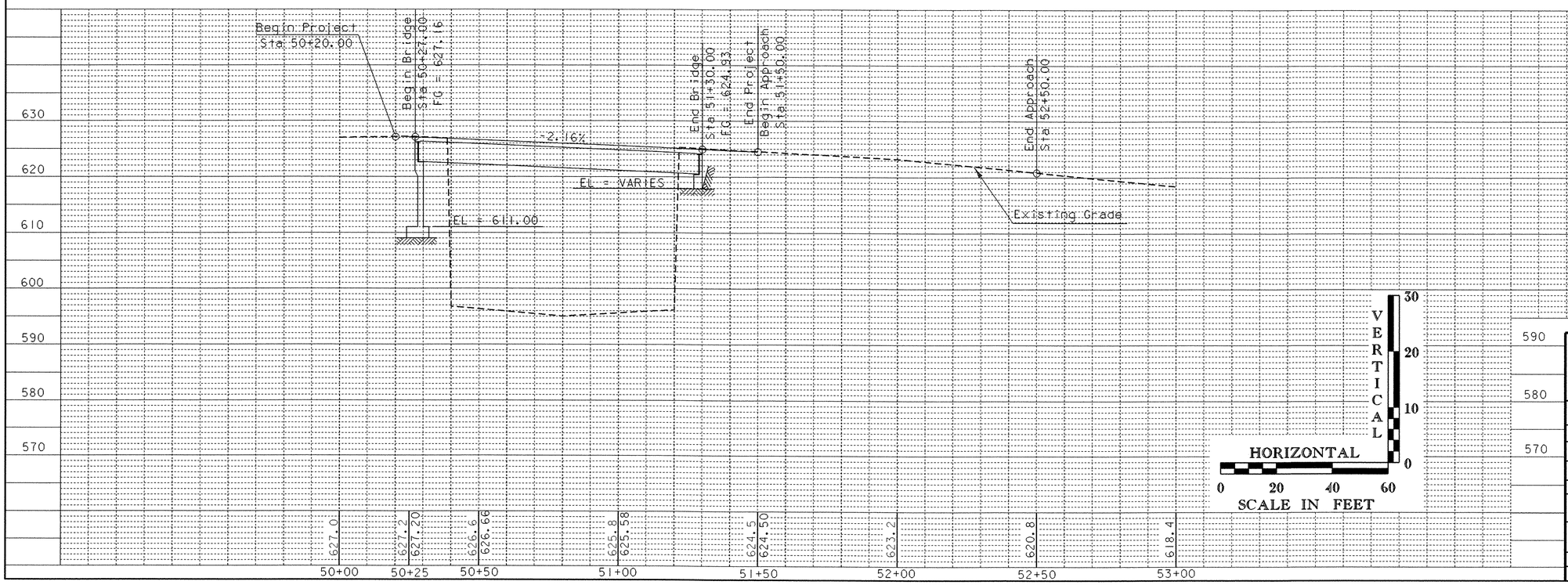

STATE OF VERMONT
AGENCY OF TRANSPORTATION

Town Of MORRISTOWN		Bridge No. 53	
Highway No. "B" STREET		Log Sta. / Surv. Sta. 50+79	
PROFILE			
"B" STREET OVER THE LAMOILLE RIVER			
Designed By K.M. HIGGINS		Drawn By P.G. JARVIS	
Checked By K.M. HIGGINS	Date 9/98	Bridge Design Supervisor C.P. WILLIAMS	Date 10/98
PROJECT MORRISTOWN		PROJECT NO. BRZ 1446 (15)	
I.G.C. Info. 88j101/structures/sj101pro.dgn sj101pro.i			
Bridge Sheet No.		Sheet 7 of 48	

STATE OF VERMONT
AGENCY OF TRANSPORTATION

TRAFFIC SIGN SUMMARY SHEET

MILEMARKER, STATION, OR SIGN NUMBER	SIGN LEGEND	SIGN DIMENSIONS EA	SIGN DIMENSIONS WIDTH (in)	SIGN DIMENSIONS HEIGHT (in)	NEW & SALVAGED SIGNS "A"	NEW & SALVAGED SIGNS "B"	NEW & SALVAGED SIGNS SALV SIGN	NEW & SALVAGED SIGNS SALV TIS	EXIST POST RETAIN	EXIST POST SALVAGE	NEW SIGN POSTS NO. OF POSTS	FLANGED CHANNEL lb/ft 1.12	FLANGED CHANNEL lb/ft 2.0	FLANGED CHANNEL lb/ft 3.0	SQUARE STEEL (in) 1.75 lb/ft 1.88	SQUARE STEEL (in) 2.0 lb/ft 2.16	SQUARE STEEL (in) 2.5 lb/ft 3.35	ANCHOR	SLEEVE	TUBULAR ALUMINUM Ø (in) 3.0 lb/ft 1.3	TUBULAR ALUMINUM Ø (in) 4.0 lb/ft 1.7	TUBULAR ALUMINUM Ø (in) 4.0 MOD lb/ft 1.7	FOUNDATION	TUBULAR STEEL Ø (in) 3.0 lb/ft 7.6	TUBULAR STEEL Ø (in) 3.5 lb/ft 9.0	TUBULAR STEEL Ø (in) 4.0 lb/ft 10.8	TUBULAR STEEL Ø (in) 5.0 lb/ft 14.6	W-SHAPE STEEL FTG. SIZE 24"	W-SHAPE STEEL FTG. SIZE 30"	W-SHAPE STEEL WEIGHT	W-SHAPE STEEL POST SIZE	SIGN FRAME REQUIRED	REMARKS	SIGN DETAIL DETAIL ON SHEET NUMBER	SIGN DETAIL STD. SHEET NUMBER
												OPTION ITEMS																							
50+20.00 16' LT	STOP	1	30	30	6.25						1			×			×																RI-1		E-143
50+20.00 16' RT	LEGAL LOAD LIMIT 24,000 POUNDS	1	24	30	5						1			×			×																VR-017		E-141

FINAL POST LENGTHS ARE TO BE DETERMINED IN THE FIELD. POST SIZES ARE COMPUTED BASED ON INFORMATION FURNISHED ON THE STANDARD SHEETS AND THE TRAFFIC & SAFETY DIVISION'S "SIGN POST DESIGN GUIDELINE."

											FT	FT	FT 28	FT	FT	FT 28		EA	LB	LB	LB		LB	LB	LB	LB								
TOTALS		SF 11.25	SF	EA.	SF						FT 28			FT 28					LB			EA.	LB				EA.	EA.	LB					

PROJECT NAME: MORRISTOWN
PROJECT NUMBER: BRZ 1446(15)

FILE NAME: 88j101/structures/sj101nul.dgn
IPARM NAME: sj101tss.i
PROJECT LEADER: C.P. WILLIAMS
DESIGNED BY: W.B. SYMONDS
TRAFFIC SIGN SUMMARY SHEET

PLOT DATE: 03-NOV-2005
DRAWN BY: D.G. BASSETT
CHECKED BY: W.B. SYMONDS
SHEET 8 OF 49

SOIL CLASSIFICATION

AASHTO

A1	Gravel and Sand
A3	Fine Sand
A2	Silty or Clayey Gravel and Sand
A4	Silty Soil - Low Compressibility
A5	Silty Soil - Highly Compressible
A6	Clayey Soil - Low Compressibility
A7	Clayey Soil - Highly Compressible

ROCK QUALITY DESIGNATION

R.Q.D. (%)	ROCK DESCRIPTION
<25	Very Poor
25 to 50	Poor
51 to 75	Fair
76 to 90	Good
>90	Excellent

SHEAR STRENGTH

UNDRAINED SHEAR STRENGTH IN P.S.F.	CONSISTENCY
<250	Very Soft
250-500	Soft
500-1000	Med. Stiff
1000-2000	Stiff
2000-4000	Very Stiff
>4000	Hard

CORRELATION GUIDE OF "N" TO DENSITY/CONSISTENCY

DENSITY (GRANULAR SOILS)

N	DESCRIPTIVE TERM
<5	Very Loose
5-10	Loose
11-24	Med. Dense
25-50	Dense
>50	Very Dense

CONSISTENCY (COHESIVE SOILS)

N	DESCRIPTIVE TERM
<2	Very Soft
2-4	Soft
5-8	Med. Stiff
9-15	Stiff
16-30	Very Stiff
31-60	Hard
>60	Very Hard

COMMONLY USED SYMBOLS

▼	Water Elevation
⊗	Standard Penetration Boring
⊕	Auger Boring
⊙	Rod Sounding
S	Sample
N	Standard Penetration Test Blow Count Per Foot For: 2" O. D. Sampler 1 3/8" I. D. Sampler Hammer Weight Of 140 Lbs. Hammer Fall Of 30"
VS	Field Vane Shear Test
US	Undisturbed Soil Sample
B	Blast
DC	Diamond Core
MD	Mud Drill
WA	Wash Ahead
HSA	Hollow Stem Auger
AX	Core Size 1 1/8"
BX	Core Size 1 5/8"
NX	Core Size 2 1/8"
M	Double Tube Core Barrel Used
LL	Liquid Limit
PL	Plastic Limit
PI	Plasticity Index
NP	Non Plastic
w	Moisture Content (Dry Wgt. Basis)
D	Dry
M	Moist
MTW	Moist To Wet
W	Wet
Sat	Saturated
Bo	Boulder
Gr	Gravel
Sa	Sand
Si	Silt
Cl	Clay
HP	Hardpan
Le	Ledge
NLTD	No Ledge To Depth
CNPF	Can Not Penetrate Further
TLOB	To Ledge Or Boulder
NR	No Recovery
Rec.	Recovery
%Rec.	Percent Recovery
RQD	Rock Quality Designation
CBR	California Bearing Ratio
<	Less Than
>	Greater Than
R	Refusal (N > 100)

COLOR

blk	Black	pnk	Pink
bl	Blue	pu	Purple
brn	Brown	rd	Red
dk	Dark	tn	Tan
gry	Gray	wh	White
gn	Green	yel	Yellow
lt	Light	mltc	Multicolored
or	Orange		

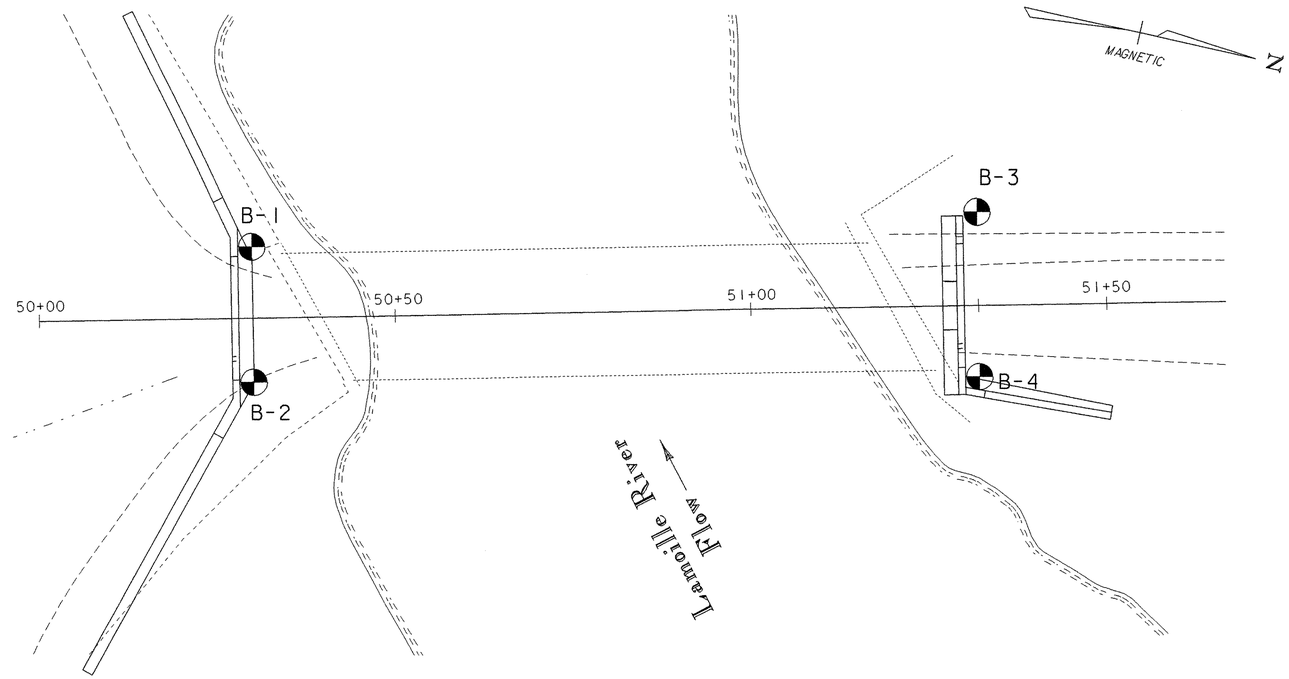

BORING CHART

HOLE NO.	SURV. STATION	OFFSET (FT)	GROUND ELEV.	ELEV. TLOB
B-1	50+30	10 LT	626.8	609.8
B-2	50+30	9 RT	627.2	608.7
B-3	51+32	13 LT	625.6	621.1
B-4	51+32	10 RT	625.5	620.5

PLAN

SCALE 1" = 10'-0

10 0 10

DEFINITIONS (AASHTO)

BEDROCK (LEDGE) - Rock in its native location of indefinite thickness.

BOULDER - A rock fragment with an average dimension > 12 inches.

COBBLE - Rock fragments with an average dimension between 3 and 12 inches.

GRAVEL - Rounded particles of rock < 3" and > 0.0787" (#10 sieve).

SAND - Particles of rock < 0.0787" (#10 sieve) and > 0.0029" (#200 sieve).

SILT - Soil < 0.0029" (#200 sieve), non or slightly plastic and exhibits no strength when air-dried.

CLAY - Fine grained soil, exhibits plasticity when moist and considerable strength when air-dried.

VARVED - Alternate layers of silt and clay.

HARDPAN - Extremely dense soil, cemented layer, not softened when wet.

MUCK - Soft organic soil (containing > 10% organic material.

MOISTURE CONTENT - Weight of water divided by dry weight of soil.

FLOWING SAND - Granular soil so saturated (loose) that it flows into drill casing during extraction of wash rod.

STRIKE - Angle from magnetic north to line of intersection of bed with a horizontal plane.

DIP - Inclination of bed with a horizontal plane.

GENERAL NOTES

1. The subsurface explorations shown herein were made between **3/94** and **4/94** by the Agency.
2. Soil and rock classifications, properties and descriptions are based on engineering interpretation from available subsurface information by the Agency and may not necessarily reflect actual variations in subsurface conditions that may be encountered between individual boring or sample locations.
3. Observed water levels and/or conditions indicated are as recorded at the time of exploration and may vary according to the prevailing rainfall, methods of exploration and other factors.
4. Engineering judgement was exercised in preparing the subsurface information presented herein. Analysis and interpretation of subsurface data was performed and interpreted for Agency design and estimating purposes. Presentation of the information in the Contract is intended to provide the Contractor access to the same data available to the Agency. The subsurface information is presented in good faith and is not intended as a substitute for personal investigation, independent interpretation, independent analysis or judgement by the Contractor.
5. Pictorial structure details shown on the boring plan layout or soils profile are for illustrative purposes only and may not accurately portray final contract details.
6. Terminology used on boring logs to describe the hardness, degree of weathering, and spacing of fractures, joints and other discontinuities in the bedrock is defined in the AASHTO Manual on Subsurface Investigations, 1988.

STATE OF VERMONT
AGENCY OF TRANSPORTATION

Town Of MORRISTOWN	Bridge No. 53
Highway No. "B" STREET	Log Sta. Surv. Sta. 50+79

"B" STREET OVER THE LAMOILLE RIVER

BORING INFORMATION SHEET

Designed By K.M. HIGGINS	Drawn By P.G. JARVIS
Checked By K.M. HIGGINS Date 9/98	Bridge Design Supervisor C.P. WILLIAMS Date 10/98
PROJECT MORRISTOWN	PROJECT NO. BRZ 1446 (15)
I.G.C. info. 88j101/structures/sj101bor.dgn	sj101bor.i
Bridge Sheet No.	Sheet 9 of 48

PLOTTED 03-NOV-2005

STATE OF VERMONT
AGENCY OF TRANSPORTATION
MATERIALS & RESEARCH DIVISION
SUBSURFACE INFORMATION

HOLE NO.: B-1
SHEET 1 OF 1
DATE STARTED: 3/24/94
DATE COMPLETED: 3/25/94

PROJECT NAME: MORRISVILLE
SITE NAME: LAMOILLE R.
STATION: 50+30
GROUND EL.: 626.80

PROJECT NUMBER: BRZ 1446(15)
SITE NO.: MAIN ST.
OFFSET: -10.00
G.W. DEPTH:

BORING CREW
CREW CHIEF: RAYMOND
DRILLER: POWERS
LOGGER: RAYMOND

BORING RIG: TRUCK
BORING TYPE: WASH BORE
SAMPLE TYPE: SPLIT BARREL

Top of Footing Abutment No. 1
Elevation = 611.00

DEPTH	SYMBOL	CLASSIFICATION OF MATERIALS (Description)	BLOWS PER FOOT	M.C. %	GRAVEL %	SAND %	FINES %	LL	PI
5		A-2-4, Sa, Brn, MTW, Rec. = 1.2'	32	20.0	7.8	76.0	16.2		
10		A-2-4, Sl Gr Sa, Brn, MTW, Rec. = 1.0'	37	25.7	27.6	51.0	21.4		
15		Concrete							
20		Run #1BXDC 17.0' - 18.5' Rec. = 1.3' Run #2 BXMDC 18.5' - 19.5' Rec. = 1.0' Run #3 BXMDC 19.5' - 24.5' Rec. = 5.0'	Top of Bedrock @ 17.0' See Geologist's Report Below						
25		Run #4 BXMDC 24.5' - 27.5' Rec. = 2.8'							
30		Geologist's Report Run Rec.% Rqd.% 1 87 87 2 100 100 3 100 92 4 93 93 Core consists of quartz - sericite - chlorite schist. The rock is slightly weathered in the top 1 foot of core but is otherwise unweathered and competent.	Hole Stopped @ 27.5' in Bedrock						
35									
40									
45									

STATE OF VERMONT
AGENCY OF TRANSPORTATION
MATERIALS & RESEARCH DIVISION
SUBSURFACE INFORMATION

HOLE NO.: B-2
SHEET 1 OF 1
DATE STARTED: 3/22/94
DATE COMPLETED: 3/24/94

PROJECT NAME: MORRISVILLE
SITE NAME: LAMOILLE R.
STATION: 50+30
GROUND EL.: 627.22

PROJECT NUMBER: BRZ 1446(15)
SITE NO.: MAIN ST.
OFFSET: 9.00
G.W. DEPTH:

BORING CREW
CREW CHIEF: RAYMOND
DRILLER: POWERS
LOGGER: RAYMOND

BORING RIG: TRUCK
BORING TYPE: WASH BORE
SAMPLE TYPE: SPLIT BARREL

Top of Footing Abutment No. 1
Elevation = 611.00

DEPTH	SYMBOL	CLASSIFICATION OF MATERIALS (Description)	BLOWS PER FOOT	M.C. %	GRAVEL %	SAND %	FINES %	LL	PI
5		A-1-b, Gr Sa, Brn, WET, Rec. = 0.2'	20	16.2	38.2	49.9	11.8		
		Very little resistance to advance the casing.							
10		No Recovery	2						
15		No Recovery	6						
20		18.0' - 18.5' Broken Rock Run #1BXMDC 19.5' - 24.5' Rec. = 4.8'	Top of Bedrock @ 19.5' See Geologist's Report Below						
25		Run #2 24.5' - 29.5' Rec. = 5.0'							
30		Geologist's Report Run Rec.% Rqd.% 1 96 96 2 104 104 Core consists of quartz - sericite - chlorite schist. The rock is slightly weathered in the top 2 feet of core. The remainder of the core is unweathered. The rock is competent.	Hole Stopped @ 29.5' in Bedrock						
35									
40									
45									

STATE OF VERMONT
AGENCY OF TRANSPORTATION
MATERIALS & RESEARCH DIVISION
SUBSURFACE INFORMATION

HOLE NO.: B-3
SHEET 1 OF 1
DATE STARTED: 3/17/94
DATE COMPLETED: 3/21/94

PROJECT NAME: MORRISVILLE
SITE NAME: LAMOILLE R.
STATION: 51+32
GROUND EL.: 625.60

PROJECT NUMBER: BRZ 1446(15)
SITE NO.: MAIN ST.
OFFSET: -13.00
G.W. DEPTH:

BORING CREW
CREW CHIEF: RAYMOND
DRILLER: POWERS
LOGGER: RAYMOND

BORING RIG: TRUCK
BORING TYPE: WASH BORE
SAMPLE TYPE: SPLIT BARREL

Top of Footing Abutment No. 2
Elevation = 619.92

DEPTH	SYMBOL	CLASSIFICATION OF MATERIALS (Description)	BLOWS PER FOOT	M.C. %	GRAVEL %	SAND %	FINES %	LL	PI
		A-3, Sa, Brn, WET, Rec. = 0.8'	13	15.8	11.8	78.5	9.6		
5		Run #1BXDC 4.5' - 5.5' Rec. = 0.8' Run #2 BXMDC 5.5' - 10.5' Rec. = 4.9'	Top of Bedrock @ 4.5'						
10		Run #3 BXMDC 10.5' - 15.5' Rec. = 5.1'							
15		Run #4 BXMDC 15.5' - 20.5' Rec. = 5.0'	See Geologist's Report Below						
20		Run #5 BXMDC 20.5' - 25.5' Rec. = 4.9'							
25		Run #6 BXMDC 25.5' - 30.5' Rec. = 5.0'							
30		Geologist's Report Run Rec.% Rqd.% 1 80 0 2 98 98 3 100 100 4 100 98 5 98 97 6 100 100 Core consists of quartz - sericite - chlorite schist. The rock is unweathered and is competent.	Hole Stopped @ 30.5' in Bedrock						
35									
40									
45									

STATE OF VERMONT
AGENCY OF TRANSPORTATION
MATERIALS & RESEARCH DIVISION
SUBSURFACE INFORMATION

HOLE NO.: B-4
SHEET 1 OF 1
DATE STARTED: 3/21/94
DATE COMPLETED: 3/21/94

PROJECT NAME: MORRISVILLE
SITE NAME: LAMOILLE R.
STATION: 51+32
GROUND EL.: 625.50

PROJECT NUMBER: BRZ 1446(15)
SITE NO.: MAIN ST.
OFFSET: 10.00
G.W. DEPTH:

BORING CREW
CREW CHIEF: RAYMOND
DRILLER: POWERS
LOGGER: RAYMOND

BORING RIG: TRUCK
BORING TYPE: WASH BORE
SAMPLE TYPE: SPLIT BARREL

Top of Footing Abutment No. 2
Elevation = 619.92

DEPTH	SYMBOL	CLASSIFICATION OF MATERIALS (Description)	BLOWS PER FOOT	M.C. %	GRAVEL %	SAND %	FINES %	LL	PI
		Silty Sandy Material	R						
5		No Recovery Run #1BXMDC 5.5' - 10.5' Rec. = 5.0'	Top of Bedrock @ 5.5'						
10		Run #2 BXMDC 10.5' - 15.5' Rec. = 4.9'	See Geologist's Report Below						
15		Geologist's Report Run Rec.% Rqd.% 1 100 95 2 98 96 Core consists of quartz - sericite - chlorite schist. The rock is slightly weathered in the top 2 feet and unweathered for the remainder of the run. The rock is competent overall.	Hole Stopped @ 15.5' in Bedrock						
20									
25									
30									
35									
40									
45									

Note: All Units in Feet

DATUM
VERTICAL NGVD 1929
HORIZONTAL N/A

SURVEYED BY R. GILMAN DATE 4/89
DRAWN BY N. GARBACIK DATE 7/07/93
SQUAD LEADER C. P. WILLIAMS
DESIGN FILE NO. 88J101/materialsresearch/mj101bor.dgn
IPARM FILE 88J101/structures/sj101bol.1
PROJ. NAME MORRISTOWN
PROJ. NO. BRZ 1446(15)
SHEET 10 OF 48 SHEETS

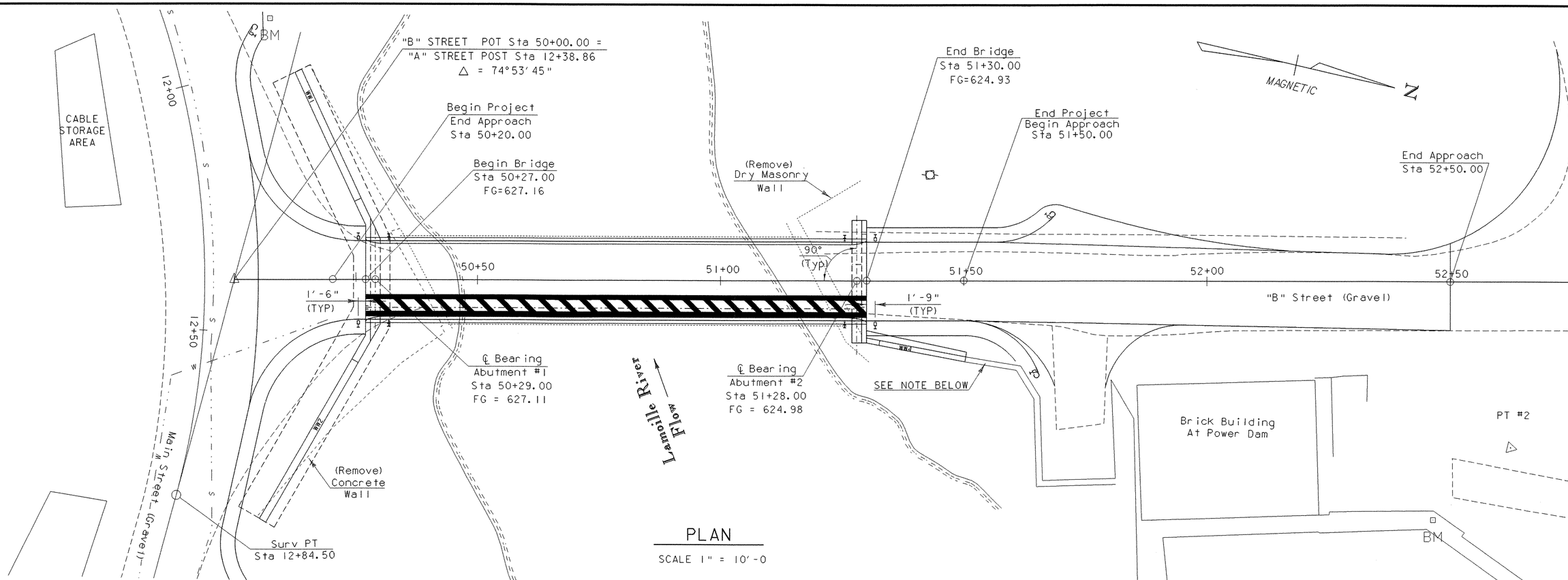

PLAN

SCALE 1" = 10′-0

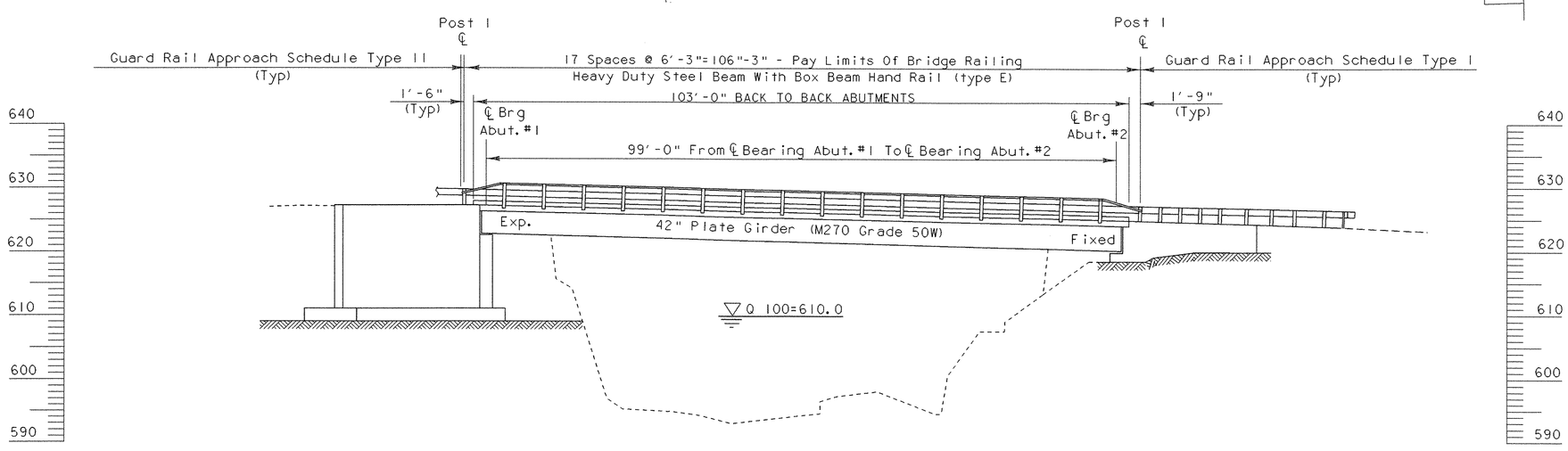

ELEVATION @ UPSTREAM FASCIA

SCALE 1" = 10′-0

10 0 10

SCALE 1" = 10′-0

NOTE:
WINGWALL NO. 4 TO MATCH INTO AN EXISTING WALL THAT WAS NOT IN PLACE AT THE TIME OF THE ORIGINAL SURVEY. ALL DIMENSIONS AND ELEVATIONS MUST BE VERIFIED IN THE FIELD BY THE CONTRACTOR.

STATE OF VERMONT
AGENCY OF TRANSPORTATION

Town Of MORRISTOWN	Bridge No. 53
Highway No. "B" STREET	Log Sta. / Surv. Sta. 50+79
PLAN & ELEVATION	
"B" STREET OVER THE LAMOILLE RIVER	
Designed By K.M. HIGGINS	Drawn By P.G. JARVIS
Checked By K.M. HIGGINS Date 9/98	Bridge Design Supervisor C.P. WILLIAMS Date 10/98
PROJECT MORRISTOWN	PROJECT NO. BRZ 1446 (15)
I.G.C. Info. 88j101/structures/sj101pe.dgn sj101pe.i	
Bridge Sheet No.	Sheet 11 of 48

PLOTTED 03-NOV-2005

GENERAL NOTES:

1. ALL MATERIALS AND CONSTRUCTION SHALL CONFORM TO STATE OF VERMONT , AGENCY OF TRANSPORTATION STANDARD SPECIFICATIONS FOR CONSTRUCTION, DATED 2001, AND IT'S LATEST REVISIONS, AND THE AASHTO STANDARD SPECIFICATIONS FOR HIGHWAY BRIDGES, DATED 1996, AND IT'S LATEST REVISIONS.

2. DESIGN IS FOR HS-25-44 LIVE LOADING.

3. ALL DIMENSIONS ARE HORIZONTAL OR VERTICAL AND ARE GIVEN AT 68 DEGREES F OR AS NOTED OTHERWISE.

4. ITEM 529.15 "REMOVAL OF STRUCTURE" SHALL BE USED TO REMOVE ALL PORTIONS OF THE EXISTING SUBSTRUCTURE NOT REMOVED UNDER THE ITEM 204.25 "STRUCTURE EXCAVATION" INCLUDING PORTIONS OF THE WINGWALL AT ABUTMENT 1 AND THE DRY MASONRY WALL AT ABUTMENT 2.

5. EXISTING SIGNS NOT REUSED SHALL REMAIN THE PROPERTY OF THE TOWN OF MORRISTOWN. THESE SIGNS SHALL BE STOCKPILED ON THE PROJECT AND THEN LOADED ON A TRUCK SUPPLIED BY THE TOWN. CONTACT THE TOWN ROAD FOREMAN TO ARRANGE REMOVAL FROM THE PROJECT.

6. THE CONTRACTOR SHALL SUPPLY THE TOWN WITH ONE NEW VALVE WRENCH, PAYMENT IS INCIDENTAL TO ITEM 629.27 - GATE VALVE WITH VALVE BOX.

SUBSTRUCTURES ON LEDGE

7. FOR ALL SUBSTRUCTURES, WHERE LEDGE IS BETWEEN 2' AND 4' BELOW THE DESIGN TOP OF FOOTING ELEVATION, THE FOOTING SHALL BE POURED TO THE TOP OF LEDGE AS SHOWN USING "CONCRETE CLASS B (HPC-B)".

8. THE SUBSTRUCTURE UNITS HAVE BEEN DESIGNED FOR THE TOP OF FOOTING ELEVATIONS AS SHOWN ON THE PLANS. IF THE LEDGE ELEVATION IS GREATER THAN 4' BELOW THE DESIGN TOP OF FOOTING, THE PROJECT MANAGER SHALL BE NOTIFIED AND PROVIDED WITH A LEDGE PROFILE. NO FURTHER WORK SHALL BE DONE UNTIL A REPLY IS RECEIVED.

9. THE FOOTING SHALL BE FOUNDED ON LEDGE, WHICH HAS BEEN CLEANED OF ALL LOOSE ROCK AND OTHER DEBRIS. THE LEDGE SHALL BE REMOVED AS REQUIRED TO ENSURE THE FOOTINGS ARE PLACED ON COMPETENT ROCK.

10. #8 DOWELS SHALL BE DRILLED AND GROUTED INTO LEDGE AS SHOWN ON THE PLANS. THE DOWELS SHALL HAVE 2'-0" EMBEDMENT IN THE LEDGE AND SHALL EXTEND INTO THE FOOTING A MINIMUM OF 1'-6" UNLESS NOTED OTHERWISE. THE DRILLING AND GROUTING SHALL BE PAID FOR UNDER THE ITEM 507.16 "DRILLING AND GROUTING DOWELS", HOWEVER THE DOWELS SHALL BE PAID FOR UNDER THE ITEM 507.15 "REINFORCING STEEL".

11. FOR ALL SUBSTRUCTURE UNITS, WHERE THE LEDGE ELEVATION IS BETWEEN THE DESIGN TOP OF FOOTING AND 2'-0" BELOW THE DESIGN TOP OF FOOTING ELEVATION, THE LEDGE SHALL BE EXCAVATED DOWN TO 2'-0" BELOW THE DESIGN TOP OF FOOTING. ALL OVERBREAKAGE BELOW THIS ELEVATION SHALL BE REPLACED WITH "CONCRETE CLASS B (HPC-B)". A MAXIMUM OF 6" AVERAGE DEPTH OF OVERBREAKAGE REPLACEMENT SHALL BE PAID FOR AS "CONCRETE CLASS B (HPC-B)". ANY ADDITIONAL CONCRETE SHALL BE AT THE CONTRACTORS EXPENSE.

12. IF LEDGE IS ABOVE THE DESIGN TOP OF FOOTING AT ABUTMENT NO. 1, THE FOOTING ELEVATION MAY BE RAISED. BEFORE ANY ADJUSTMENT IS MADE IN THE FOOTING ELEVATIONS THE PROJECT MANAGER SHALL BE CONTACTED FOR APPROVAL OF THE CONFIGURATION.

13. IF BLASTING IS REQUIRED AND/OR PERMISSIBLE IN THIS LOCATION THEN THE CONTRACTOR SHALL ACT IN ACCORDANCE WITH VERMONT STANDARD SPCIFICATION 501.10 (f).

14. WINGWALL NO. 4 SHALL MATCH INTO THE FRONT FACE OF AN EXISTING RETAINING WALL THAT WAS NOT IN PLACE AT THE TIME OF THE ORIGINAL SURVEY. ALL DIMENSIONS SHOWN ON THE PLANS FOR WINGWALL 4 SHALL BE VERIFIED IN THE FIELD BY THE CONTRACTOR PRIOR TO CONSTRUCTION.

CONCRETE NOTES:

15. THE MINIMUM COVER FOR REINFORCING STEEL IN THE SUBSTRUCTURES SHALL BE TWO INCHES ALONG WALL FACES AGAINST EARTH, AND THREE INCHES ELSEWHERE UNLESS DETAILED OTHERWISE.

16. REINFORCING STEEL PLACEMENT TOLERANCES SHALL BE AS FOLLOWS:

SPACING	+/- 1"
CLEARANCE	+/- 1/4"

17. THE KEY IN THE CONCRETE CONSTRUCTION JOINTS SHALL BE MONOLITHIC AND CONTINUOUS FOR THE FULL LENGTH OF THE JOINT. UPWARD KEYS SHALL BE PLACED INTEGRALLY WITH THE CONCRETE BELOW THE JOINT.

18. JOINTS AND SCORE MARKS IN THE CONCRETE SHALL BE CONSTRUCTED AS INDICATED ON THE PLANS OR AS DIRECTED BY THE ENGINEER.

19. ALL EXPOSED EDGES OF CONCRETE SHALL BE CHAMFERED 1" X 1".

20. ALL REINFORCING STEEL IN THE CONCRETE DECK, BRIDGE CURBS AND BACKWALLS SHALL BE EPOXY COATED AND PAID FOR UNDER THE ITEM 507.17. WHEN EPOXY COATED REINFORCING STEEL IS CUT THE UNCOATED ENDS SHALL BE REPAIRED WITH MATERIALS AND PROCEDURES APPROVED BY THE COATING MANUFACTURER. FLAME CUTTING OF EPOXY COATED REINFORCING STEEL WILL NOT BE PERMITTED.

21. WATER REPELLENT SHALL BE APPLIED TO ALL EXPOSED CONCRETE SURFACES, EXCEPT THE UNDERSIDES OF THE BRIDGE BETWEEN DRIP NOTCHES.

22. THE DECK SHALL BE GIVEN A LIGHT BROOM FINISH NORMAL TO THE CENTERLINE OF THE BRIDGE. BROOMING SHALL PROGRESS WITH THE SCREED MACHINE WITH A MAXIMUM LAG TIME OF 10 MINUTES WITH THE WET CURE APPLICATION TO FOLLOW IMEDIATELY. IF WET CURE APPLICATION IS DELAYED THEN A SURFACE RETARDER SHALL BE APPLIED AFTER THE BROOMING WITH WET CURE TO BE APPLIED WITH IN 15 MINUTES. IF A DELAY OCCURS IN THE CONCRETING OPPERATION, ANY EXPOSED CONCRETE SHALL BE PROTECTED WITHIN 20 MINUTES OF DISCHARGE ONTO THE STRUCTURE FROM EVAPORATION BY APPLICATION OF FOGGING, WET CURE, OR OTHER APPROVED METHOD.

23. THE DECK AND CURB CONCRETE SHALL BE CONCRETE, CLASS "A" (HPC-A). ALL OTHER CONCRETE SHALL BE CLASS "B" (HPC-B) UNLESS NOTED OTHERWISE.

STRUCTURAL STEEL NOTES:

24. ALL STRUCTURAL STEEL INCLUDING BUT NOT LIMITED TO GIRDERS, DIAPHRAGMS AND CONNECTION PLATES, SHALL CONFORM TO AASHTO M 270M/M 270 GRADE 50W. ALL STRUCTURAL STEEL SHALL BE PAID UNDER THE ITEM 506.55 "STRUCTURAL STEEL (PLATE GIRDER)".

25. ALL FIELD CONNECTIONS IN UNPAINTED AREAS SHALL BE MADE USING 7/8" DIAMETER TYPE 3 BOLTS MEETING THE AASHTO M 164, TYPE 3 SPECIFICATION. IN PAINTED AREAS ALL FIELD CONNECTIONS SHALL BE MADE USING 7/8" DIAMETER GALVANIZED TYPE 1 BOLTS MEETING THE AASHTO M 164 SPECIFICATION. ANY CONNECTIONS NOT DESIGNATED SHALL BE DETAILED BY THE FABRICATOR AND SUBMITTED TO THE PROJECT MANAGER FOR APPROVAL.

26. ANY HOLES IN THE FASCIA BEAMS NOT OTHERWISE FILLED SHALL BE FITTED WITH BOLTS CONFORMING TO AASHTO M 164, TYPE 3.

27. ALL MEMBERS AND OR PLATES MARKED (CVN) AND ONLY THOSE MEMBERS MUST MEET THE CHARPY V-NOTCH REQUIREMENTS FOR MAIN MEMBERS AS INDICATED IN SECTION 714 OF THE VERMONT AGENCY OF TRANSPORTATION SPECIFICATIONS FOR CONSTRUCTION.

28. FOR WATERMAIN DETAILS SEE SPECIAL PROVISIONS & SHEETS 25 - 27.

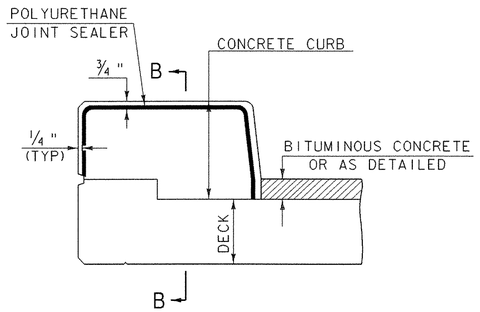

TYPICAL SECTION THROUGH CONCRETE CURB CONSTRUCTION JOINT

(NTS)

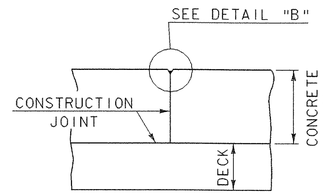

SECTION B-B

(NTS)

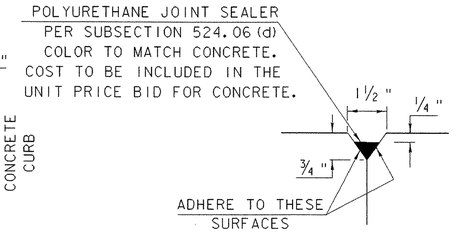

DETAIL "B"

(NTS)

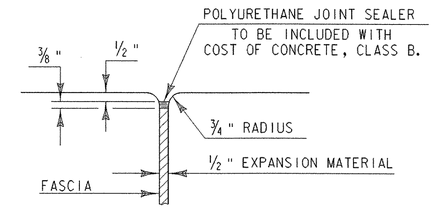

JOINT BETWEEN FASCIA AND WINGWALL

(NTS)

NOTES:

1. CONSTRUCTION JOINTS THROUGH CONCRETE CURBS SHALL BE SPACED A MAXIMUM 15'-0" CENTER TO CENTER AND SHALL BE 1'-6" MINIMUM FROM THE CENTER OF THE NEAREST BRIDGE RAIL POST. CONCRETE SHALL BE PLACED IN ALTERNATING SECTIONS WITH A MINIMUM OF 48 HOURS DELAY BETWEEN ADJACENT POURS.
2. LONGITUDINAL REINFORCING SHALL PASS THROUGH CONCRETE CURB CONSTRUCTION JOINTS.
3. CONSTRUCTION JOINTS THROUGH SIDEWALKS SHALL BE SIMILAR TO CONCRETE CURB CONSTRUCTION JOINTS.

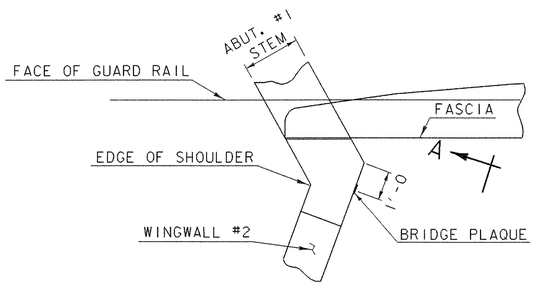

PLAN

(NTS)

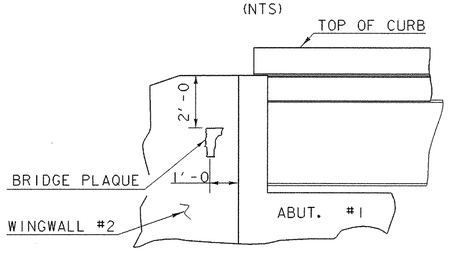

VIEW "A-A"

(NTS)

LOCATE BRIDGE PLAQUE

THE BRIDGE PLAQUE WILL BE SUPPLIED BY THE AGENCY OF TRANSPORTATION AND SHALL BE INSTALLED BY THE CONTRACTOR AT ABUTMENT #1 ON THE RIGHT SIDE AS SHOWN OR AS DIRECTED BY THE ENGINEER.

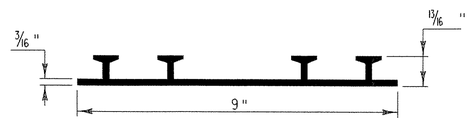

P.V.C. WATERSTOP FOR CONSTRUCTION JOINTS

(NTS)

THE COSTS FOR P.V.C. WATERSTOP SHALL BE INCLUDED IN THE UNIT PRICE BID FOR CONCRETE. OTHER CONFIGURATIONS MAY BE USED UPON APPROVAL OF THE PROJECT MANAGER.

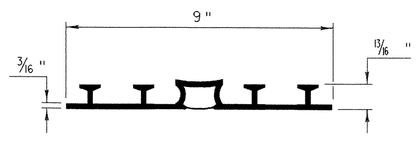

P.V.C. WATERSTOP FOR EXPANSION JOINTS

(NTS)

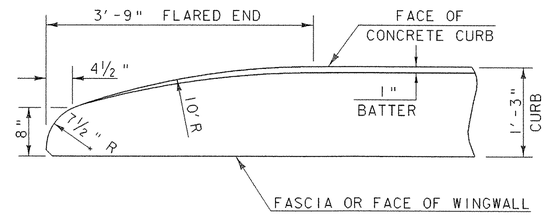

FLARED END DETAIL FOR 1'-3" CURB

(NTS)

CURB REINFORCING STIRRUP BARS SHALL BE TURNED AS REQUIRED TO FIT FLARED ENDS.

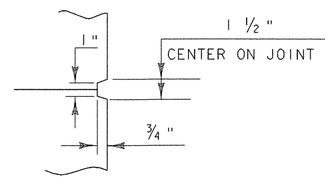

SCORE MARK DETAIL

(NTS)

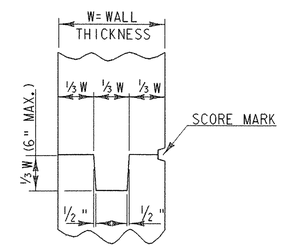

TYPICAL CONCRETE CONSTRUCTION JOINT

(NTS)

PROJECT NAME: MORRISTOWN	
PROJECT NUMBER: BRZ 1446 (15)	
FILE NAME: 88j101/structures/sj101sup.dgn IPARM NAME: sj101misc1.i PROJECT LEADER: C.P. WILLIAMS DESIGNED BY: P. ROWE MISCELLANEOUS DETAILS	PLOT DATE: 03-NOV-2005 DRAWN BY: P. ROWE CHECKED BY: K.M. HIGGINS SHEET 13 OF 48

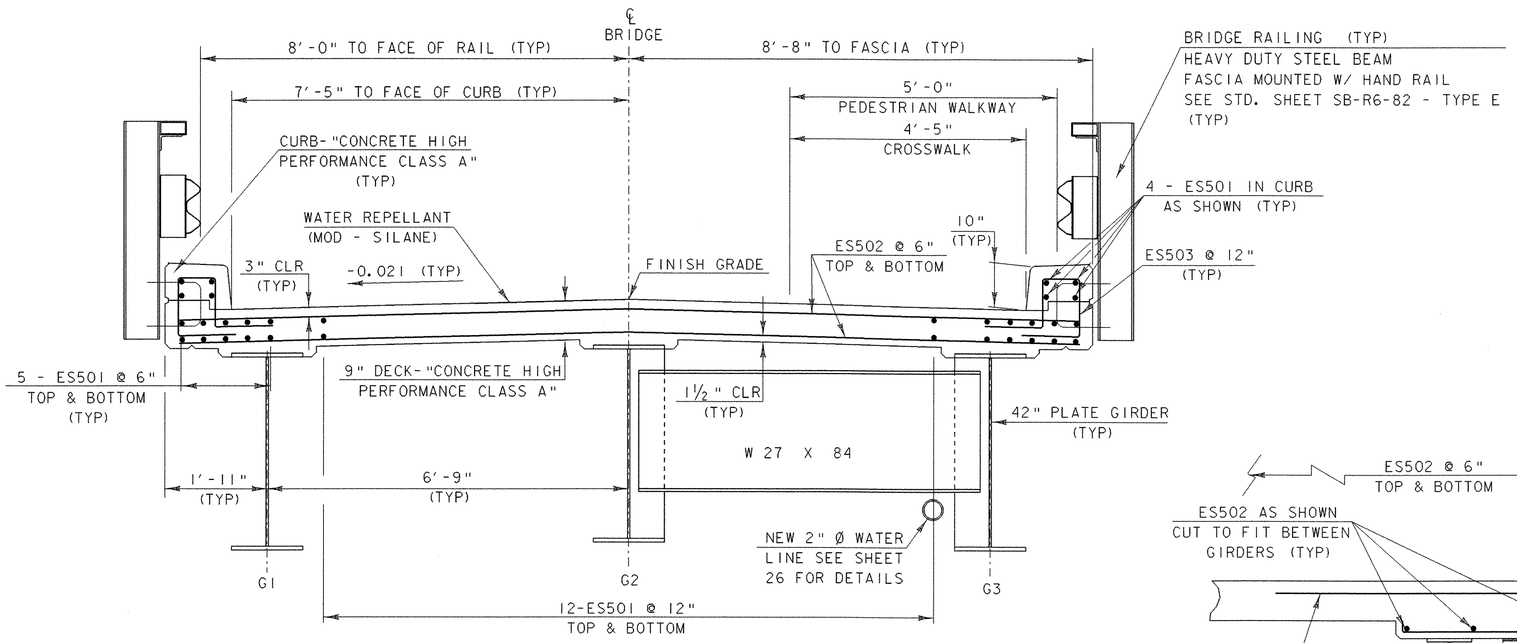

TYPICAL BRIDGE SECTION

SCALE ¾" = 1'-0

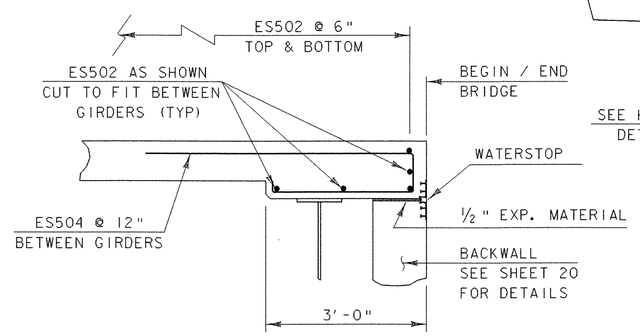

SECTION A-A

SCALE ¾" = 1'-0

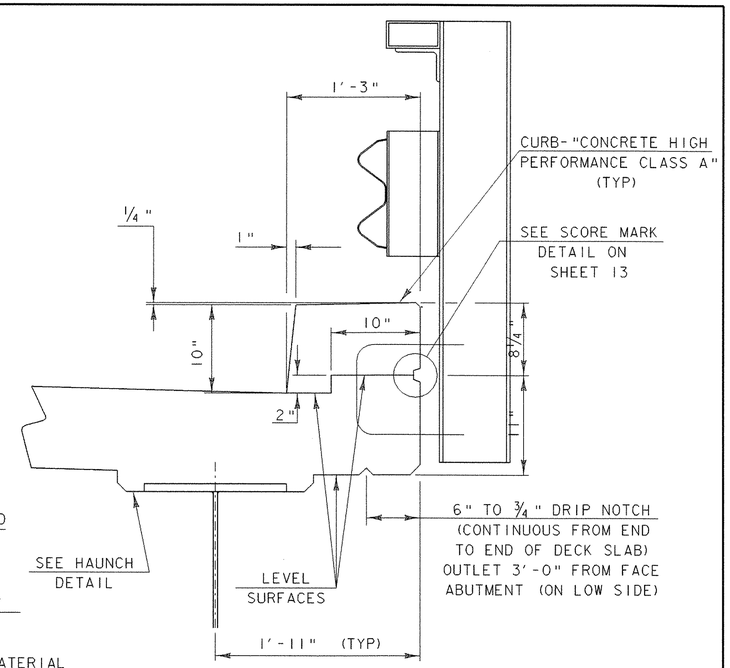

CURB DETAIL

SCALE 1½" = 1'-0

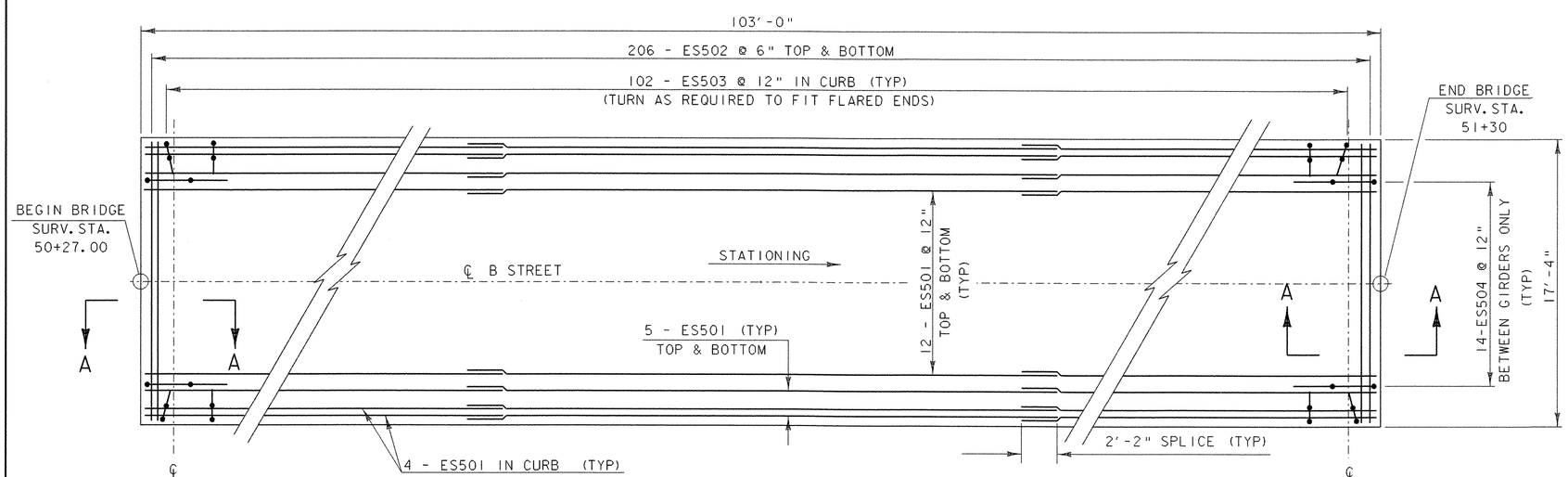

DECK REINFORCING PLAN

SCALE ¼" = 1'-0

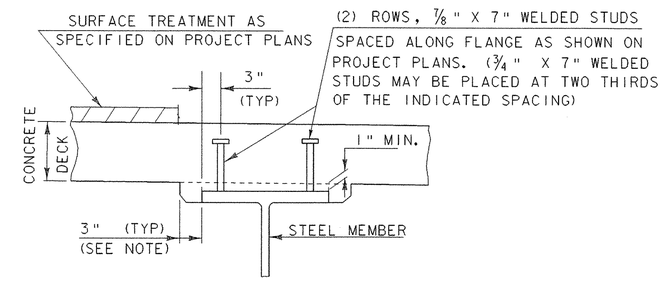

NOTE: THE 3" HORIZONTAL SECTION MAY BE ELIMINATED FOR FORMING SYSTEMS DESIGNED FOR THE CONSTRUCTION OF VERTICAL HAUNCHES. SYSTEMS SHALL BE SUBMITTED FOR APPROVAL TO THE STRUCTURES ENGINEER. ALL VOIDS SHALL BE FILLED WITH MORTAR, TYPE IV OR AN EQUIVALENT PRODUCT FROM THE APPROVED PRODUCTS LIST.

HAUNCH AND SHEAR CONNECTOR DETAILS

NTS

PROJECT NAME: MORRISTOWN	
PROJECT NUMBER: BRZ 1446 (15)	
FILE NAME: 88j101/structures/sj101sup.dgn	PLOT DATE: 03-NOV-2005
IPARM NAME: sj101deck.i	DRAWN BY: T.G. ANDERSON
PROJECT LEADER: C.P. WILLIAMS	CHECKED BY: K.M. HIGGINS
DESIGNED BY: P. ROWE	SHEET 14 OF 48
TYPICAL SECTION & DECK REINFORCING	

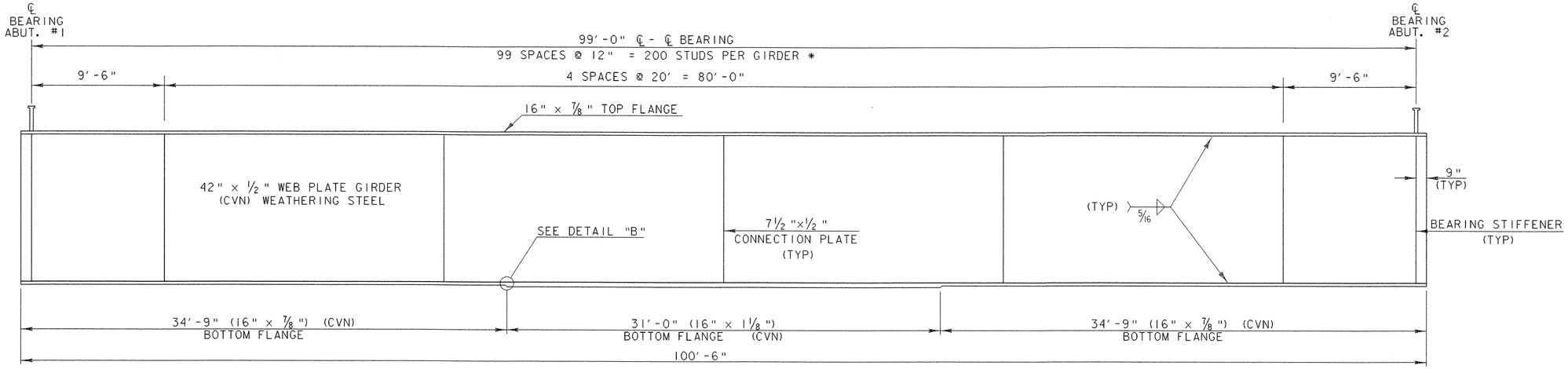

NOTE: THE CONTRACTOR/FABRICATOR MAY SUBSTITUTE 1 1/8" PLATE FOR THE ENTIRE BOTTOM FLANGE TO ELIMINATE THE TRANSITION. HOWEVER, NO EXTRA PAYMENT WILL BE MADE FOR ADDITIONAL WEIGHT OF STEEL.

GIRDER ELEVATION

HORIZONTAL SCALE: 1/4" = 1'-0"
VERTICAL SCALE: 3/4" = 1'-0"

* SEE HAUNCH DETAIL SHEET 14

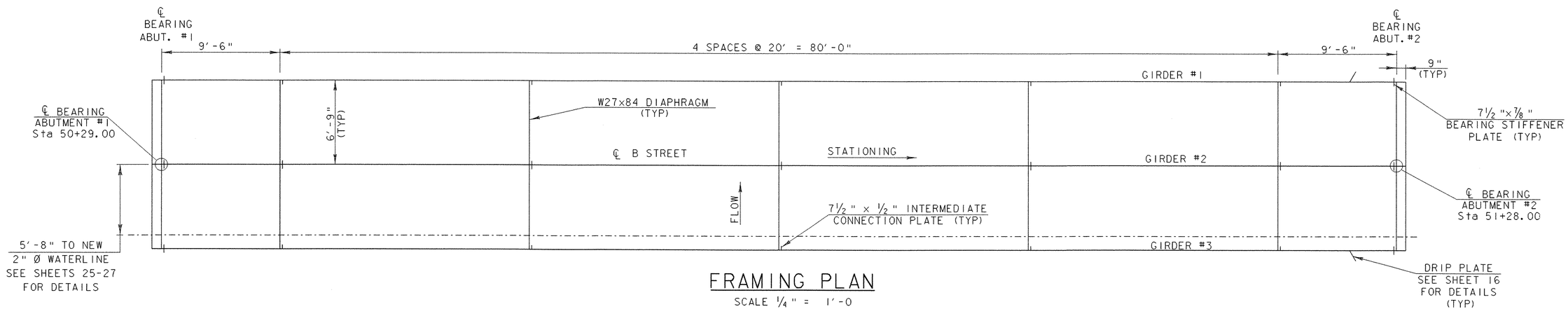

FRAMING PLAN

SCALE 1/4" = 1'-0

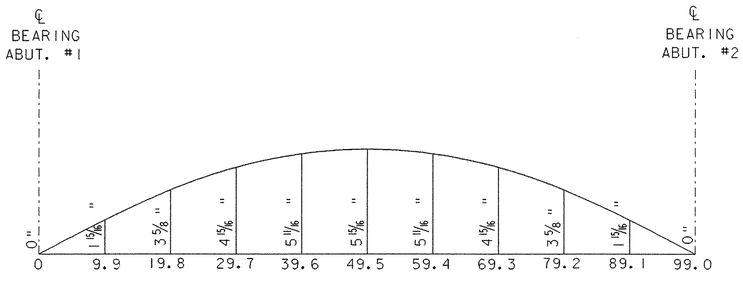

CAMBER DIAGRAM

HORIZONTAL & VERTICAL
(NTS)

NOTE: CAMBER DIAGRAM INCLUDES 3/4" DEAD LOAD DEFLECTION @ MIDSPAN DUE TO BEAM SELFWEIGHT. TOTAL CAMBER @ MIDSPAN MEASURED WHEN BEAM IS SUPPORTED ONLY AT ℄ BEARING POINTS SHALL BE 5 3/16".

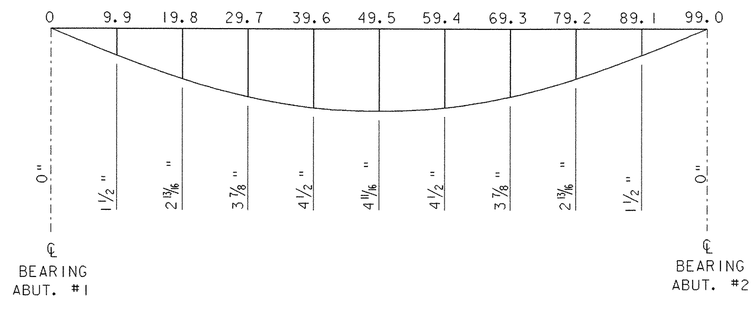

DEAD LOAD DEFLECTION DIAGRAM

HORIZONTAL & VERTICAL
(NTS)

DETAIL "B"

(NTS)

1 0 2 4 6
SCALE 1/4" = 1'-0

1 0 1 2
SCALE 3/4" = 1'-0

PROJECT NAME: MORRISTOWN	
PROJECT NUMBER: BRZ 1446 (15)	
FILE NAME: 88j101/structures/sj101sup.dgn	PLOT DATE: 03-NOV-2005
IPARM NAME: sj101fraplan.i	DRAWN BY: P. ROWE
PROJECT LEADER: C.P. WILLIAMS	CHECKED BY: K.M. HIGGINS
DESIGNED BY: P. ROWE	SHEET 15 OF 48
FRAMING PLAN & GIRDER ELEVATION	

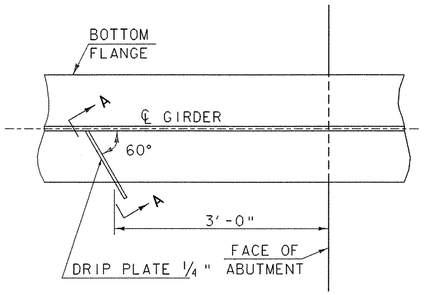

PLAN DRIP PLATE

(NTS)

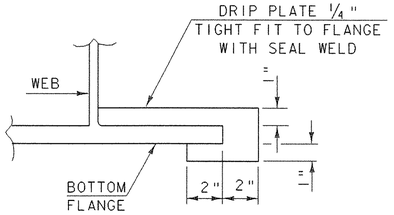

SECTION A - A

(NTS)

NOTE: DRIP PLATES SHALL BE PLACED ON OUTSIDE EDGE OF FASCIA GIRDERS ON THE HIGH SIDE OF ALL PIERS AND ABUTMENTS OR AS INDICATED ON PROJECT PLANS.

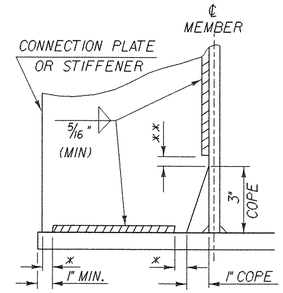

* NO WELD FOR 1/4" MIN. 1/2" MAX. (EXCEPT MUST MAINTAIN 1" MINIMUM FROM EDGE OF FLANGE)

** 1/2" ± 1/4" FOR CONNECTION PLATE OR STIFFENER TO WEB WELDS ONLY.

WELD TERMINATION AND COPING DETAILS FOR STEEL MEMBERS

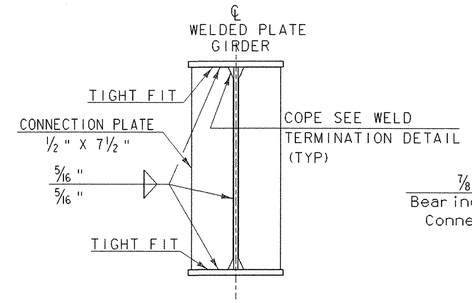

INTERMEDIATE CONNECTION PLATES

(NTS)

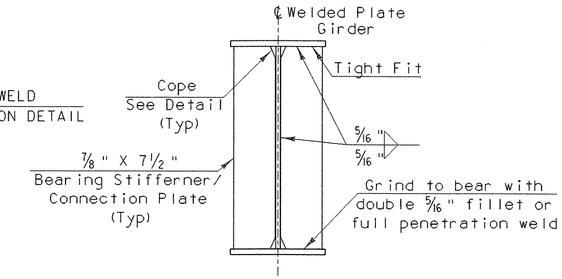

ABUTMENT BEARING STIFFENERS/ CONNECTION PLATE

(NTS)

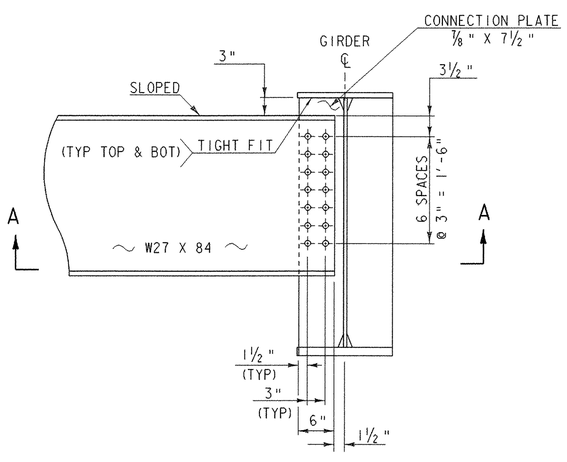

ABUTMENT DIAPHRAGM

SCALE: 1" = 1'-0"

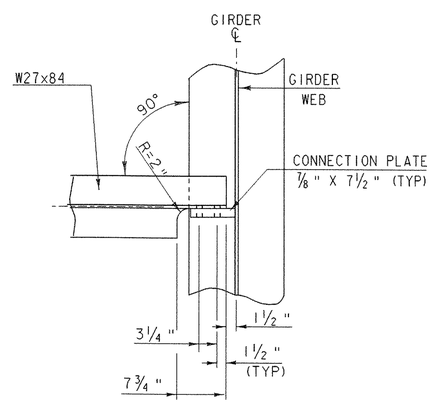

SECTION A-A

SCALE: 1" = 1'-0"

ALL CONNECTIONS SHALL BE MADE USING 7/8" DIAMETER, AASHTO M164 BOLTS. ALL HOLES IN THE DIAPHRAGMS SHALL BE 5/8" DIAMETER. ALL HOLES IN THE CONNECTION PLATES SHALL BE 1" DIAMETER.

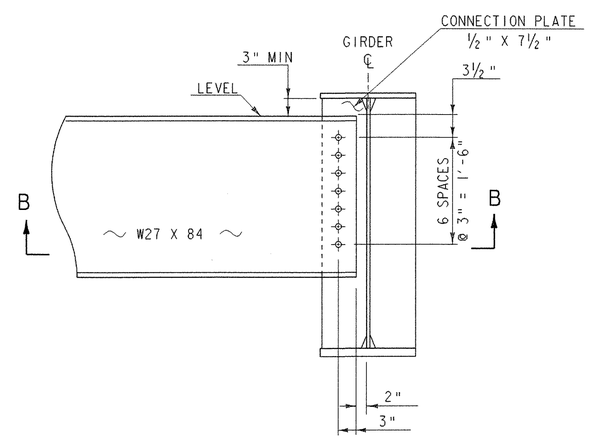

INTERMEDIATE DIAPHRAGM

SCALE: 1" = 1'-0"

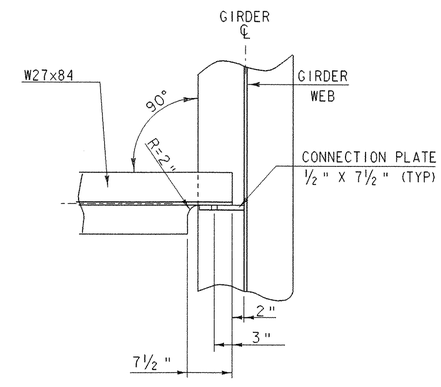

SECTION B-B

SCALE: 1" = 1'-0"

ALL CONNECTIONS SHALL BE MADE USING 7/8" DIAMETER, AASHTO M164 BOLTS. ALL HOLES IN THE DIAPHRAGMS SHALL BE 5/8" DIAMETER. ALL HOLES IN THE CONNECTION PLATES SHALL BE 1" DIAMETER.

1 9 6 3 0 1 2

SCALE 1" = 1'-0

PROJECT NAME: MORRISTOWN	
PROJECT NUMBER: BRZ 1446 (15)	
FILE NAME: 88J101/structures/sj101sup.dgn IPARM NAME: sj101ssd. i PROJECT LEADER: C.P. WILLIAMS DESIGNED BY: P. ROWE STRUCTURAL STEEL DETAILS	PLOT DATE: 03-NOV-2005 DRAWN BY: T.G. ANDERSON CHECKED BY: K.M. HIGGINS SHEET 16 OF 48

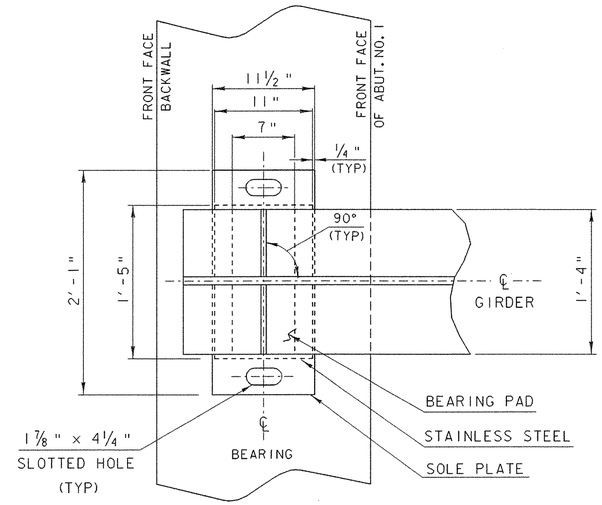

PLAN

SCALE 1 1/2 " = 1' - 0

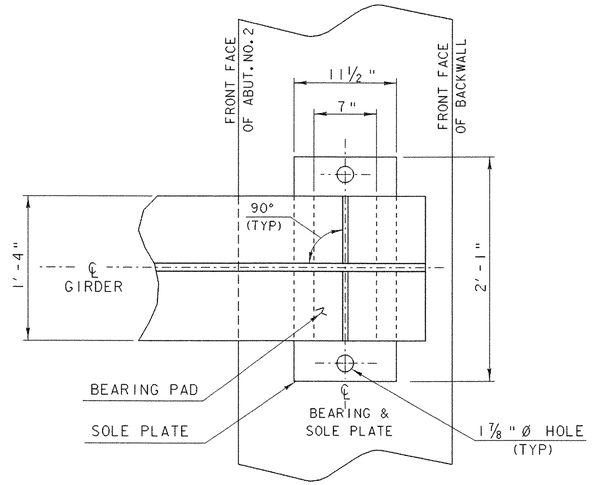

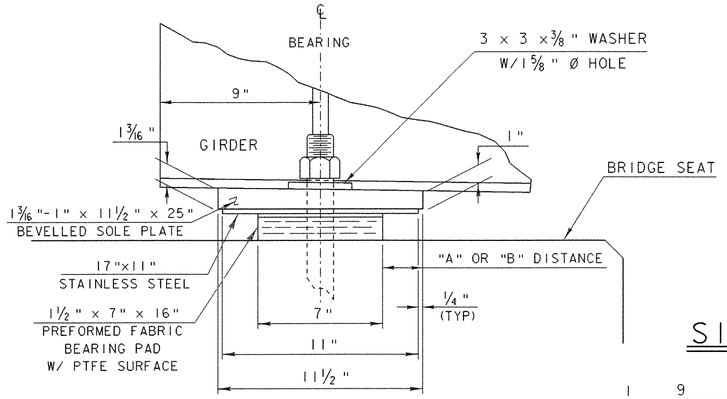

SIDE ELEVATION

SCALE 3" = 1' - 0

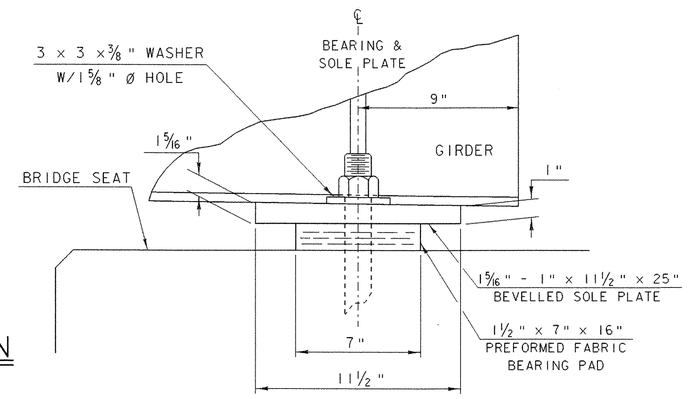

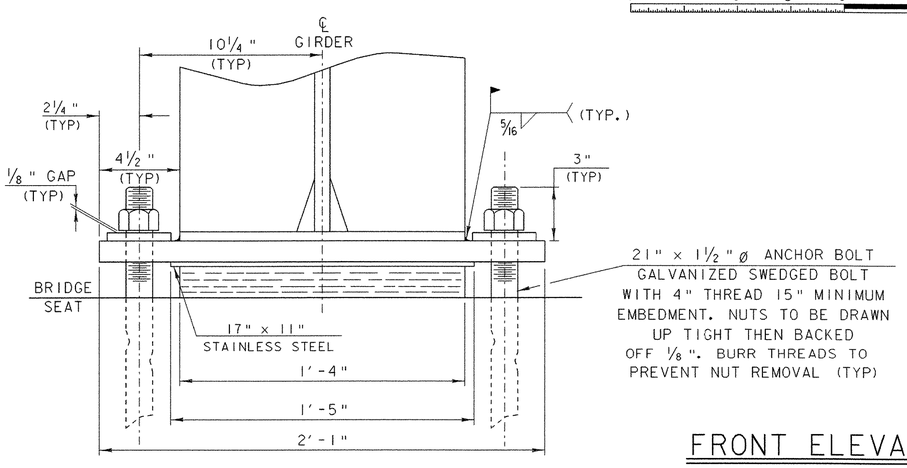

FRONT ELEVATION

SCALE 3" = 1' - 0

EXPANSION BEARING @ ABUT. #1

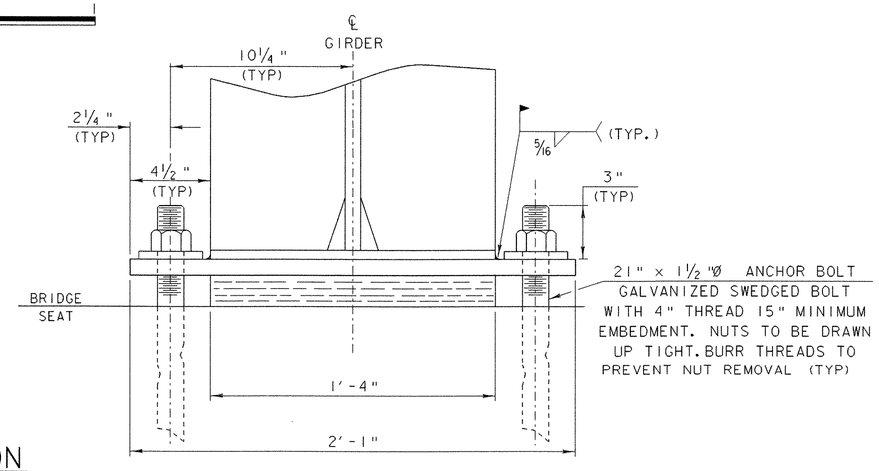

FIXED BEARING @ ABUT. #2

BEARING NOTES

1. BEARINGS SHALL BE PAID FOR UNDER THE ITEM 531.10 "BEARING DEVICE ASSEMBLY" AND SHALL CONFORM TO APPLICABLE SUBSECTIONS OF SECTION 531 AND 731.
2. THE FIELD WELD CONNECTING THE BOTTOM FLANGE WITH THE BEARING DEVICE SHALL BE MADE WITH E7018 RODS. AREAS OF GALVANIZING OR METALIZING DAMAGE BY WELDING AND/OR HANDLING SHALL BE PAINTED WITH AN APPROVED SEALANT
3. ALTERNATE CONFIGURATIONS FOR BEARINGS MAY BE SUBMITTED FOR APPROVAL. ANY ALTERNATE SUBMITTED SHALL BE DESIGNED AND CERTIFIED TO MEET THE DESIGN LOADS AND CRITERIA SHOWN ON THIS SHEET, AND SHALL MAINTAIN THE ANCHORAGE SYSTEM SHOWN.
4. BRIDGE SEAT ELEVATIONS MAY BE REVISED TO ACCOMMODATE AN ALTERNATE CONFIGURATION.
5. THE "A" DISTANCE IS THE SOLE PLATE ADJUSTMENT TO BE USED BEFORE DEAD LOAD IS ADDED TO THE GIRDERS. THE "B" DISTANCE IS THE SOLE PLATE ADJUSTMENT TO BE USED AFTER THE DECK AND CURBS HAVE BEEN POURED. THE DIFFERENCE IS THE THEORETICAL ELONGATION OF THE BOTTOM FLANGE DUE TO DEAD LOAD DEFLECTION FROM THE DECK AND CURBS. THE FINAL "B" DISTANCE MUST BE REACHED WITHIN 1/8 ".
6. DESIGN CRITERIA:
   - A. BASE PLATE TO CONCRETE DESIGN PRESSURE = 1000 PSI MAXIMUM.
   - B. MINIMUN ALLOWABLE DESIGN ROTATION = 0.015 RADIANS.
   - C. HORIZONTAL CAPACITY SHALL BE A MINIMUN 10% OF VERTICAL LOAD.
   - D. DESIGN LOAD PER BEARING = 111.37 KIPS.

   DL + SDL = 55.53 K
   LL = 55.84 K
   TOTAL = 111.37 K
7. SHOP DRAWINGS CONFORMING TO SUBSECTION 531.03 SHALL BE SUBMITTED AND INCLUDE ANY NECESSARY WELDING OR BONDING PROCEDURES.
8. SOLE PLATES, ANCHOR BOLTS, NUTS AND WASHERS SHALL BE GALVANIZED OR METALIZED AS PER SECTION 531.04 (b) AND 506.15 (a) & (b). IF THE BEARINGS ARE METALIZED, THEY SHALL BE SEALED WITH AN APPROVED PRIMER AS SPECIFIED IN SUBSECTION 506.15 (b) ALL WASHERS SHALL BE 3/8 " PLATE MINIMUM. PAYMENT FOR ANCHOR BOLTS, NUTS AND WASHERS SHALL BE INCLUDED IN THE UNIT BID PRICE FOR "BEARING DEVICE ASSEMBLY".
9. THE CONCRETE SURFACE AROUND THE BEARING SHALL SLOPE TOWARDS THE FACE OF ABUTMENT AT A MINIMUM RATE OF 1/4 " PER FOOT OR AS PRACTICAL. THE CONCRETE SURFACE DIRECTLY UNDER THE BEARING SHALL BE LEVEL.
10. ALL STEEL IN BEARING DEVICES (EXCEPT STAINLESS STEEL) SHALL BE AASHTO M 270/M 270M GRADE 36
11. FABRICATION DRAWINGS SHALL IDENTIFY THE NUMBER OF LAYERS OF VULCANIZED SHEETS AND CORRESPONDING SHEET THICKNESSES TO BE USED FOR FABRICATING THE BEARING PAD AND SHALL INCLUDE DETAILED PROCEDURES FOR BONDING THESE SHEETS TOGETHER.

ABUTMENT NO. 1

TEMP	"A" DIST	"B" DIST
0° F	3 3/16 "	2 5/8 "
15° F	3 1/16 "	2 1/2 "
30° F	2 15/16 "	2 3/8 "
45° F	2 13/16 "	2 1/4 "
60° F	2 11/16 "	2 1/8 "
75° F	2 9/16 "	2 "
90° F	2 7/16 "	1 7/8 "
105° F	2 5/16 "	1 3/4 "

PROJECT NAME: MORRISTOWN
PROJECT NUMBER: BRZ 1446 (15)

FILE NAME: 88j101/STRUCTURES/sj101 bear.dgn
IPARM NAME: 88j101/STRUCTURES/sj101 bear.i
PROJECT LEADER: C.P. WILLIAMS
DESIGNED BY: P. ROWE
BEARING DETAILS

PLOT DATE: 03-NOV-2005
DRAWN BY: P. ROWE
CHECKED BY: K.M. HIGGINS
SHEET 17 OF 48

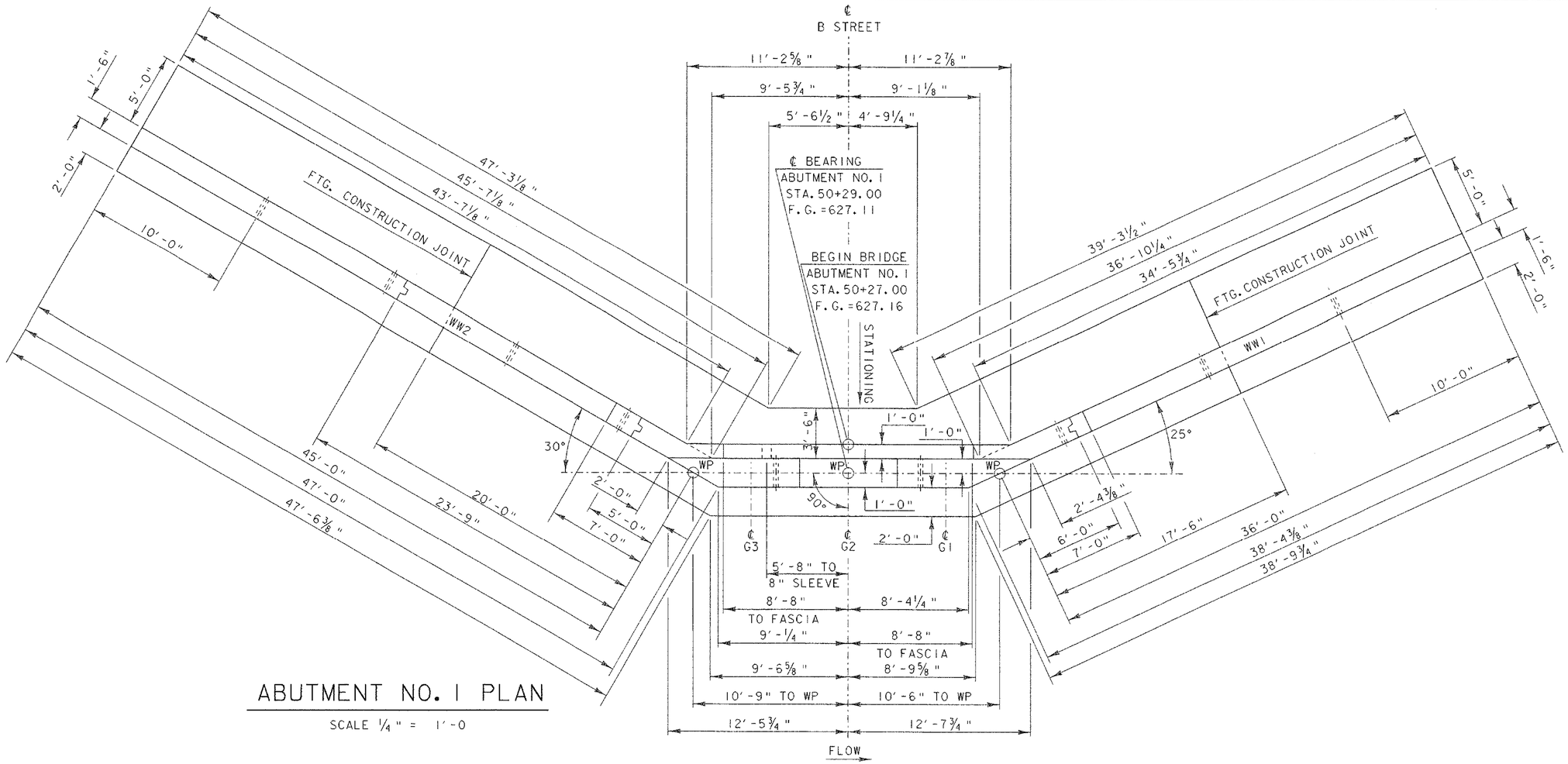

ABUTMENT NO. 1 PLAN

SCALE ¼" = 1'-0

NOTE:

NF = NEAR FACE
FF = FAR FACE
EF = EACH FACE
▲ = CUT TO FIT IN FIELD

3" CLR. UNLESS OTHERWISE SPECIFIED ON THE PLANS

ALL LAPS SHALL BE 2'-2" UNLESS NOTED OTHERWISE

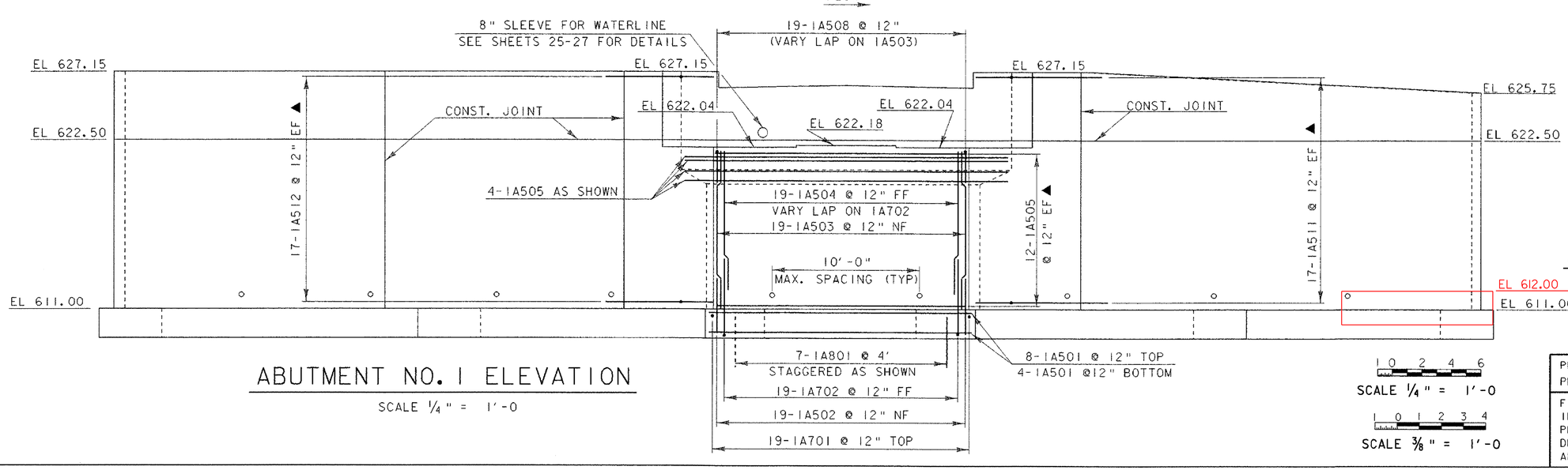

ABUTMENT NO. 1 ELEVATION

SCALE ¼" = 1'-0

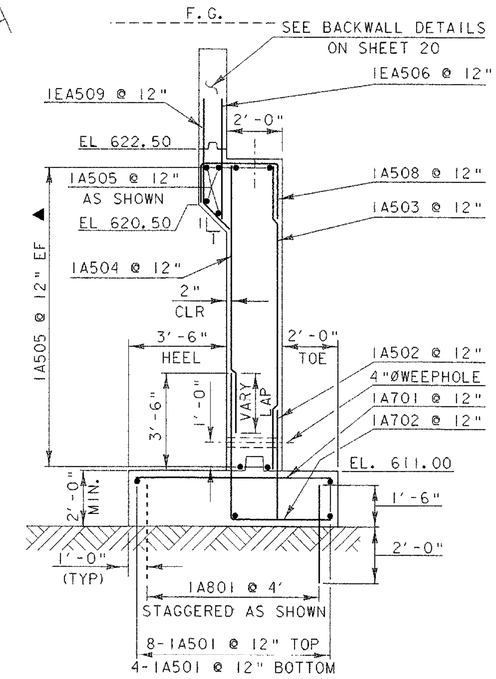

ABUTMENT NO. 1 TYP. SECTION

SCALE ⅜" = 1'-0

1 0 2 4 6
SCALE ¼" = 1'-0

1 0 1 2 3 4
SCALE ⅜" = 1'-0

PROJECT NAME:	MORRISTOWN
PROJECT NUMBER:	BRZ 1446 (15)

FILE NAME: 88j101/structures/sj101sub.dgn
IPARM NAME: 88j101/structures/sj101ab1.i
PROJECT LEADER: C.P. WILLIAMS
DESIGNED BY: P. ROWE
ABUTMENT NO. 1 DETAILS

PLOT DATE: 03-NOV-2005
DRAWN BY: P. ROWE
CHECKED BY: K.M. HIGGINS
SHEET 18 OF 48

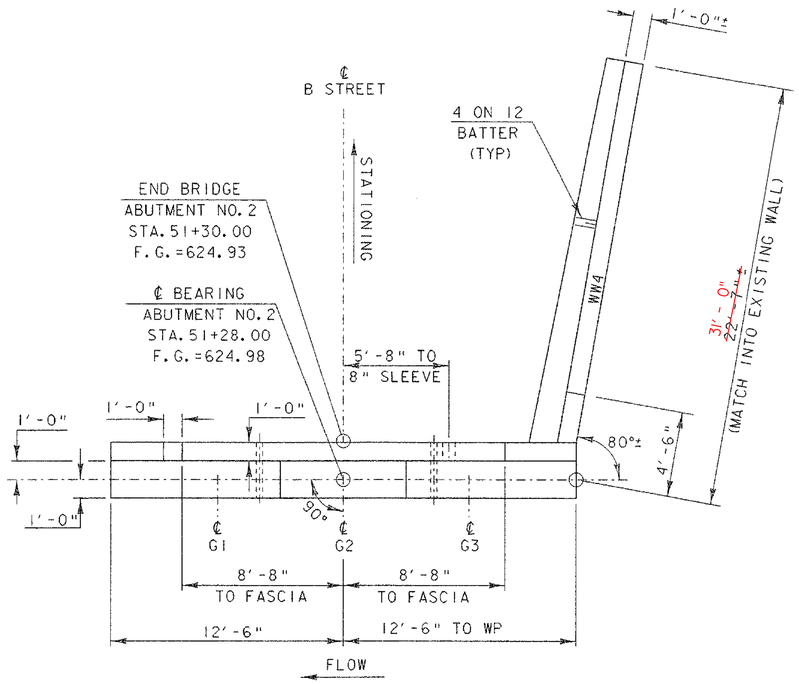

ABUTMENT NO. 2 PLAN

SCALE 1/4" = 1'-0"

NOTE:

WINGWALL #4 SHALL MATCH INTO AN EXISTING WALL.
ALL DIMENSIONS LABELLED ± MAY BE ADJUSTED IN THE FIELD BY THE RESIDENT ENGINEER.

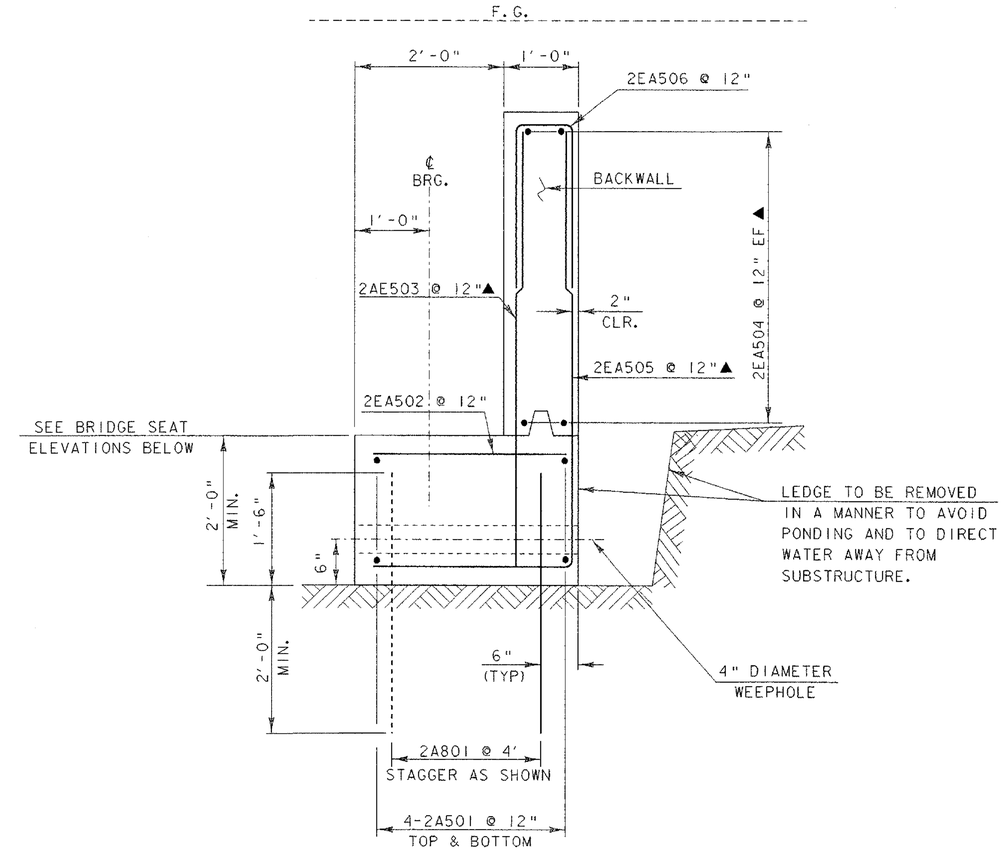

ABUTMENT NO. 2 TYPICAL SECTION

SCALE 1" = 1'-0"

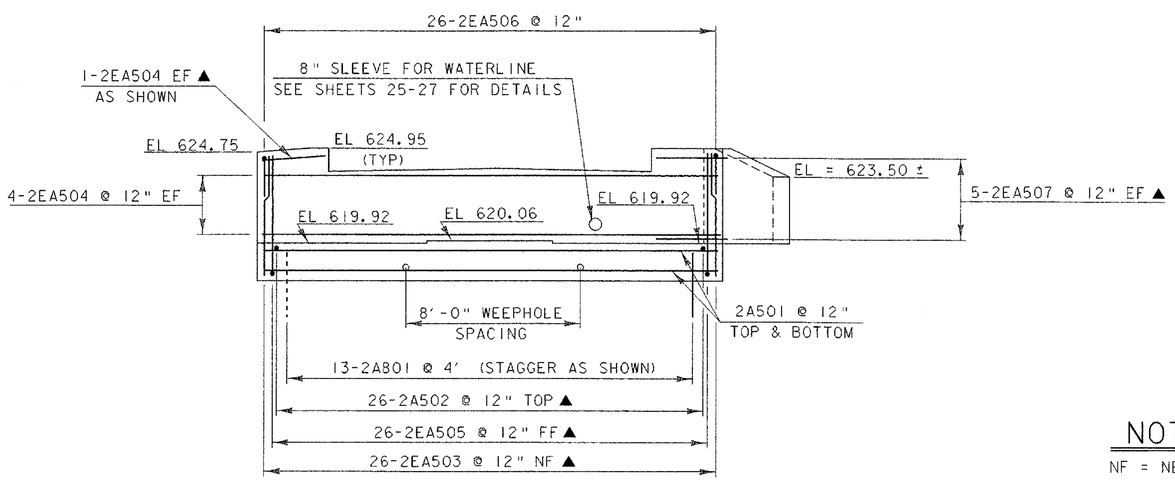

ABUTMENT NO. 2 ELEVATION

SCALE 1/4" = 1'-0"

NOTE:

NF = NEAR FACE
FF = FAR FACE
EF = EACH FACE
▲ = CUT TO FIT IN FIELD

3" CLR. UNLESS OTHERWISE SPECIFIED ON THE PLANS

ALL LAPS SHALL BE 2'-2" UNLESS NOTED OTHERWISE

1 0 2 4 6
SCALE 1/4" = 1'-0

1 9 6 3 0 1 2
SCALE 1" = 1'-0

PROJECT NAME: MORRISTOWN	
PROJECT NUMBER: BRZ 1446 (15)	
FILE NAME: 88j101/structures/sj101sub.dgn	PLOT DATE: 03-NOV-2005
IPARM NAME: 88j101/structures/sj101ab2.i	DRAWN BY: P. ROWE
PROJECT LEADER: C.P. WILLIAMS	CHECKED BY: K.M. HIGGINS
DESIGNED BY: P. ROWE	SHEET 19 OF 48
ABUTMENT NO. 2 DETAILS	

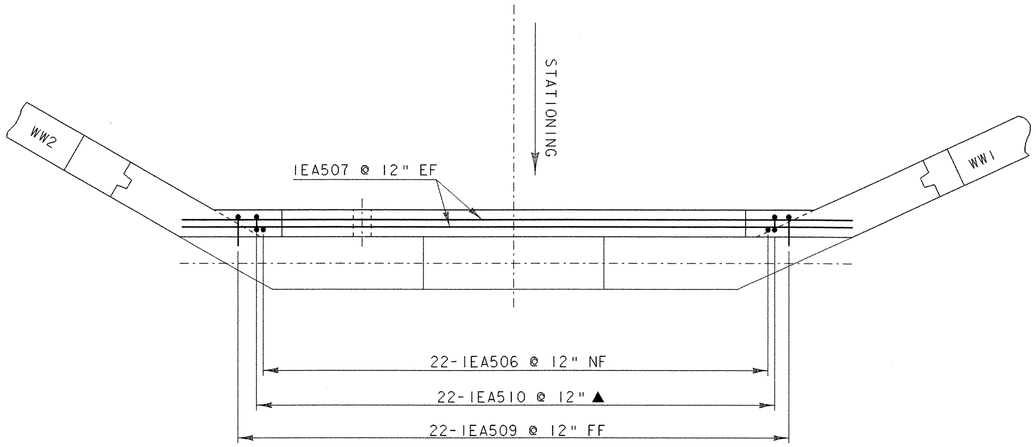

ABUTMENT NO. 1 BACKWALL PLAN

SCALE 3/8" = 1'-0

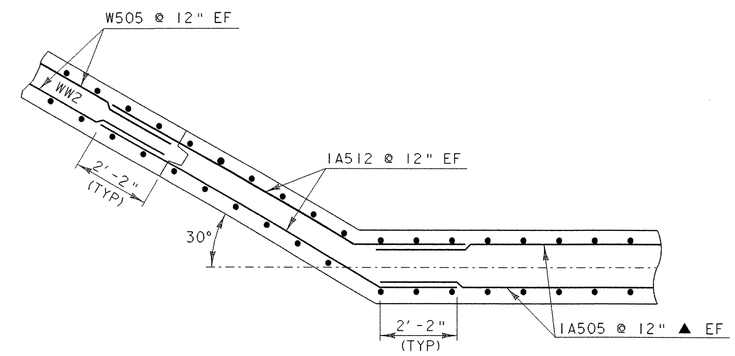

ABUTMENT NO. 1 CORNER DETAILS BELOW BRIDGE SEAT

(WINGWALL #1 SIMILAR)
NTS

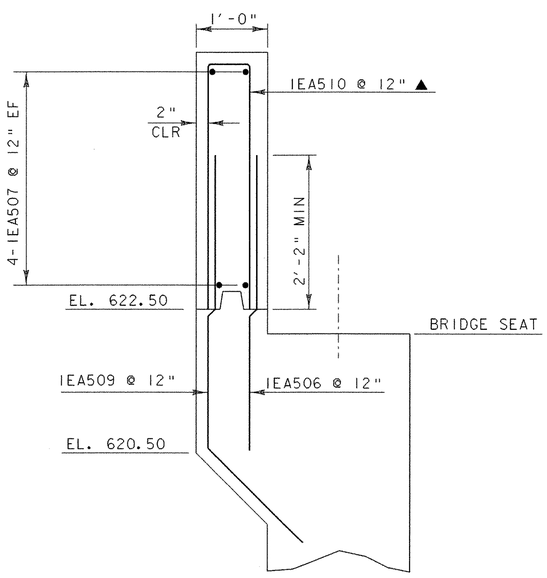

ABUTMENT NO. 1 BACKWALL TYPICAL SECTION

SCALE 1" = 1'-0

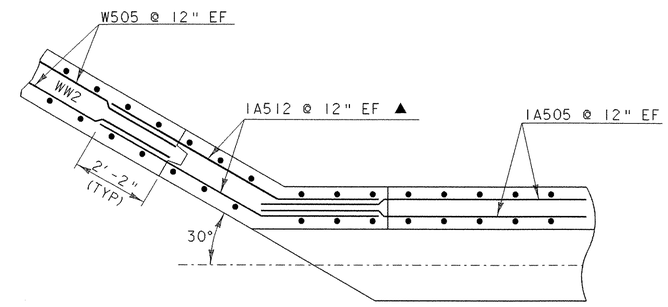

ABUTMENT NO. 1 CORNER DETAILS ABOVE BRIDGE SEAT

(WINGWALL #1 SIMILAR)
NTS

NOTE:

NF = NEAR FACE
FF = FAR FACE
EF = EACH FACE
▲ = CUT TO FIT IN FIELD

3" CLR. UNLESS OTHERWISE SPECIFIED ON THE PLANS

ALL LAPS SHALL BE 2'-2" UNLESS NOTED OTHERWISE

1 9 6 3 0 1 2

SCALE 1" = 1'-0

1 0 1 2 3 4

SCALE 3/8" = 1'-0

NOTE:
REINFORCING FOR BACKWALL NO. 2 SHOWN WITH ABUTMENT 2 DETAILS

PROJECT NAME: MORRISTOWN
PROJECT NUMBER: BRZ 1446 (15)

FILE NAME: 88j101/structures/sj101sub.dgn
IPARM NAME:88j101/structures/sj101bw.i
PROJECT LEADER: C.P. WILLIAMS
DESIGNED BY: P. ROWE
BACKWALL DETAILS & CORNER DETAILS

PLOT DATE: 03-NOV-2005
DRAWN BY: P. ROWE
CHECKED BY: K.M. HIGGINS
SHEET 20 OF 48

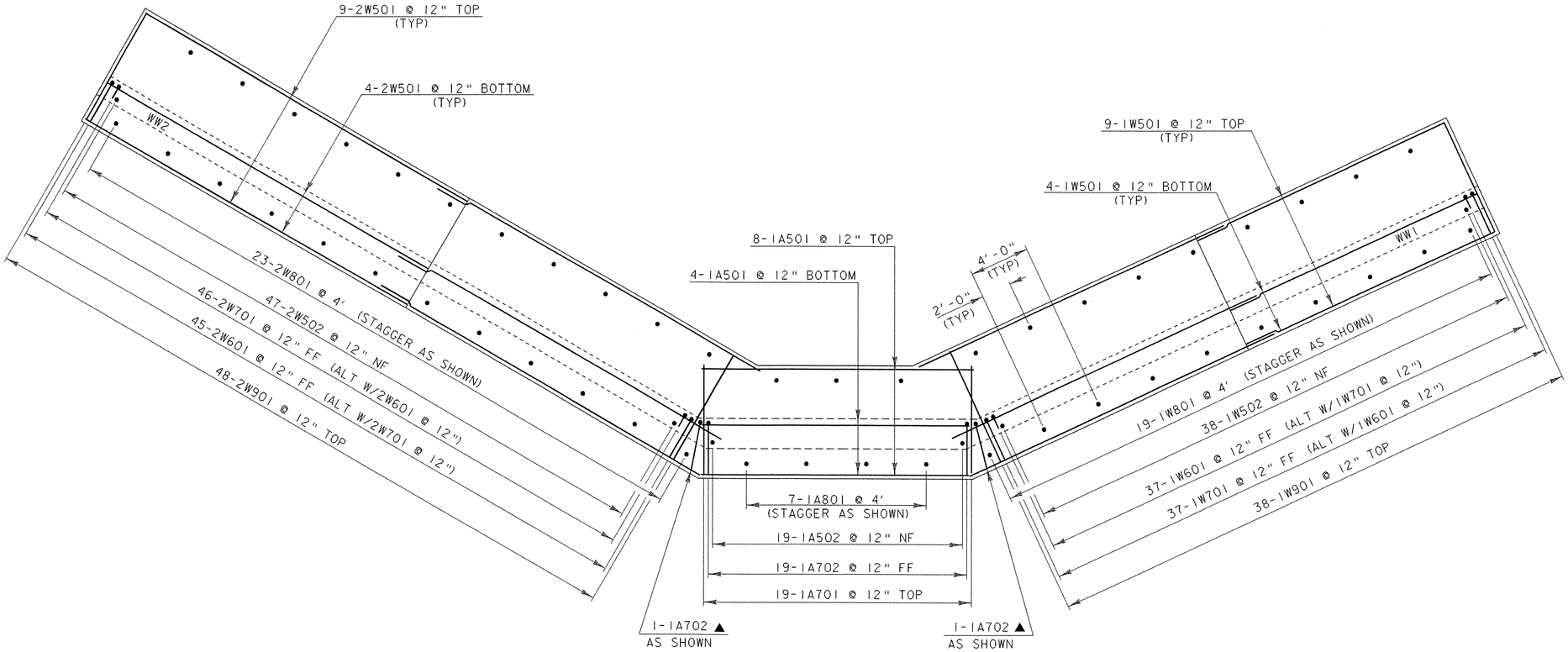

ABUTMENT NO. 1 PLAN

SCALE 1/4" = 1'-0

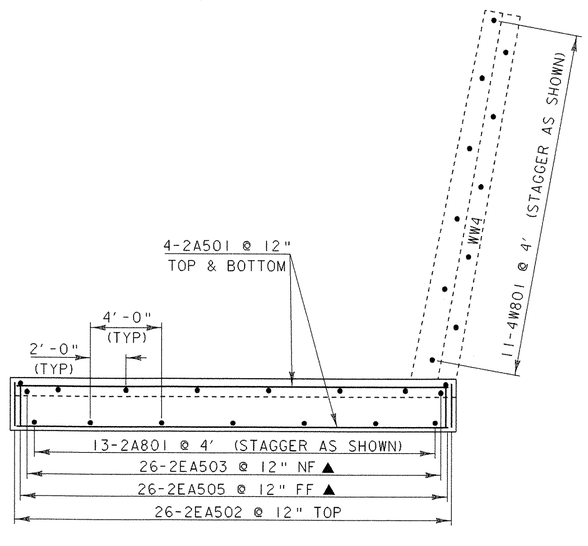

ABUTMENT NO. 2 PLAN

SCALE 1/4" = 1'-0"

NOTE:

NF = NEAR FACE
FF = FAR FACE
EF = EACH FACE
▲ = CUT TO FIT IN FIELD

3" CLR. UNLESS OTHERWISE SPECIFIED ON THE PLANS

ALL LAPS SHALL BE 2'-2" UNLESS NOTED OTHERWISE

1 0 2 4 6
SCALE 1/4" = 1'-0

PROJECT NAME: MORRISTOWN	
PROJECT NUMBER: BRZ 1446 (15)	
FILE NAME: 88j101/structures/sj101sub.dgn IPARM NAME: 88j101/structures/sj101ft.i PROJECT LEADER: C.P. WILLIAMS DESIGNED BY: P. ROWE FOOTING REINFORCING DETAILS	PLOT DATE: 03-NOV-2005 DRAWN BY: P. ROWE CHECKED BY: K.M. HIGGINS SHEET 21 OF 48

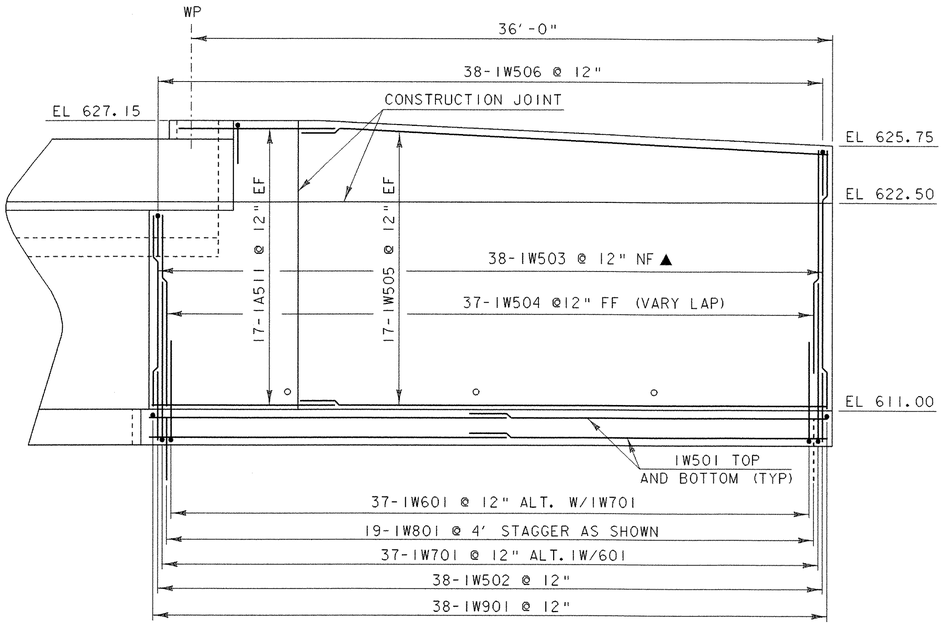

WINGWALL NO. 1 ELEVATION

SCALE 1/4" = 1'-0"

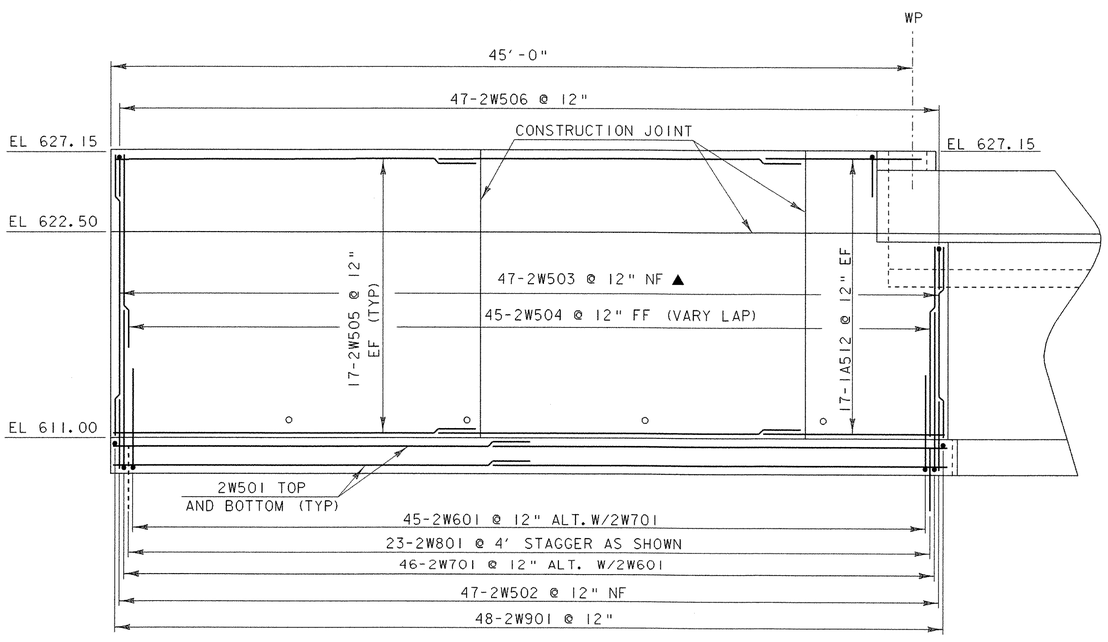

WINGWALL NO. 2 ELEVATION

SCALE 1/4" = 1'-0"

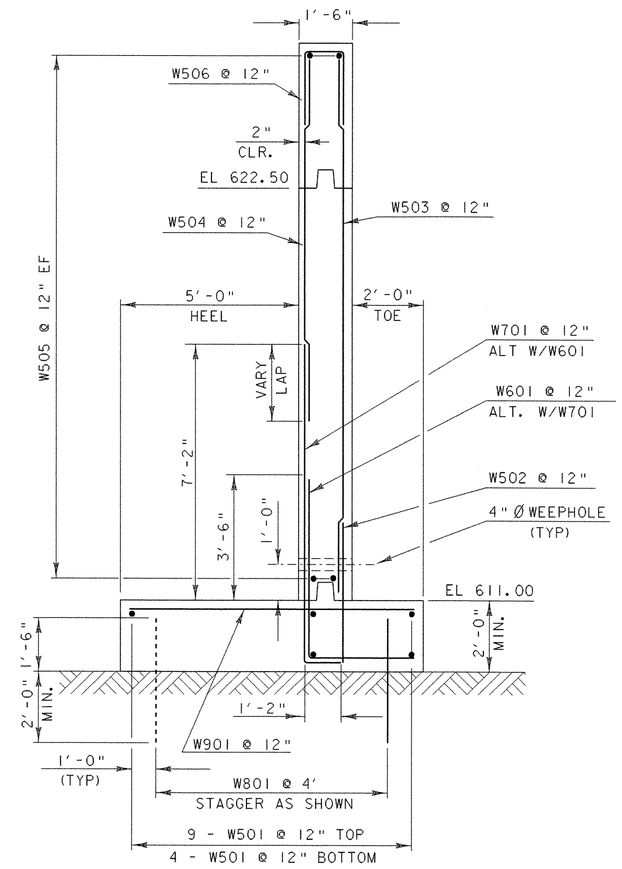

WINGWALL NO. 1 & 2 TYPICAL SECTION

SCALE 1/2" = 1'-0"

NOTE:

NF = NEAR FACE
FF = FAR FACE
EF = EACH FACE
▲ = CUT TO FIT IN FIELD

3" CLR. UNLESS OTHERWISE SPECIFIED ON THE PLANS

ALL LAPS SHALL BE 2'-2" UNLESS NOTED OTHERWISE

1 0 1 2
SCALE 1/2" = 1'-0

1 0 2 4 6
SCALE 1/4" = 1'-0

PROJECT NAME: MORRISTOWN	
PROJECT NUMBER: BRZ 1446 (15)	
FILE NAME: 88j101/structures/sj101sub.dgn IPARM NAME: 88j101/structures/sj101ww1&2.i PROJECT LEADER: C.P. WILLIAMS DESIGNED BY: P. ROWE WINGWALL NO. 1 & NO. 2 DETAILS	PLOT DATE: 03-NOV-2005 DRAWN BY: T. ANDERSON CHECKED BY: K.M. HIGGINS SHEET 22 OF 48

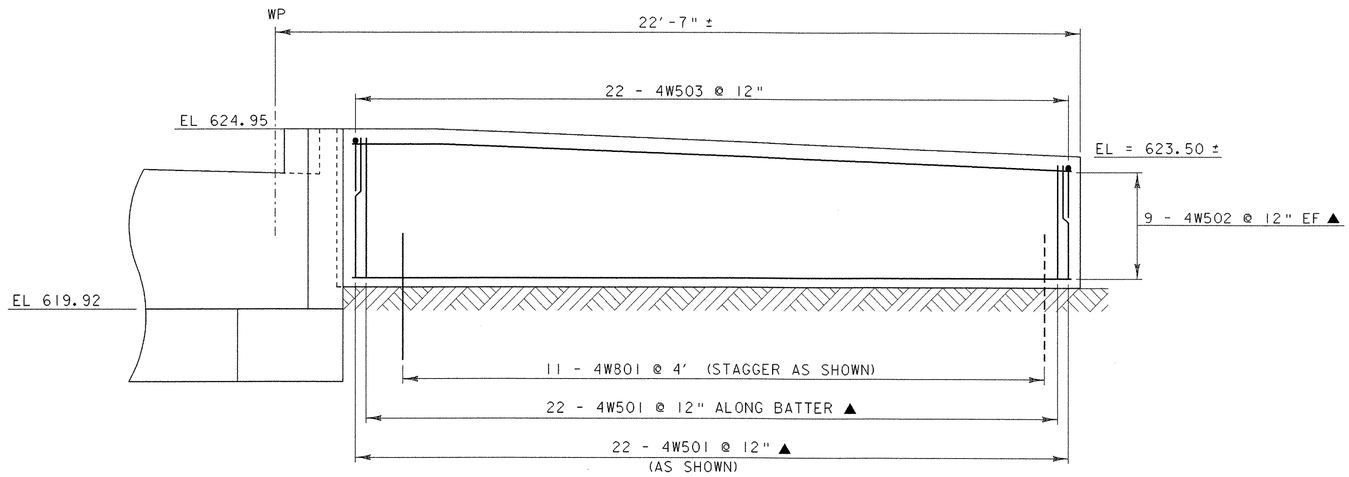

WINGWALL NO. 4 ELEVATION

SCALE ½" = 1'-0

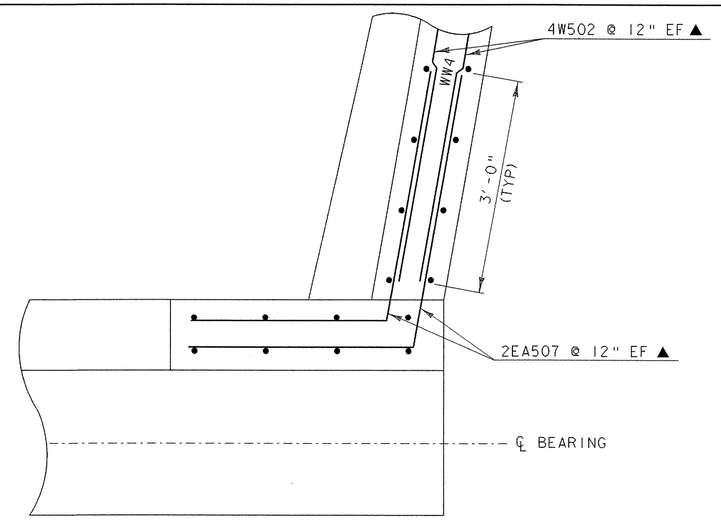

ABUTMENT NO. 2 CORNER DETAILS
(ABOVE BRIDGE DECK SEAT)

SCALE 1" = 1'-0"

NOTE:

WINGWALL #4 SHALL MATCH INTO AN EXISTING WALL. ALL DIMENSIONS LABELLED ± MAY BE ADJUSTED IN THE FIELD BY THE RESIDENT ENGINEER.

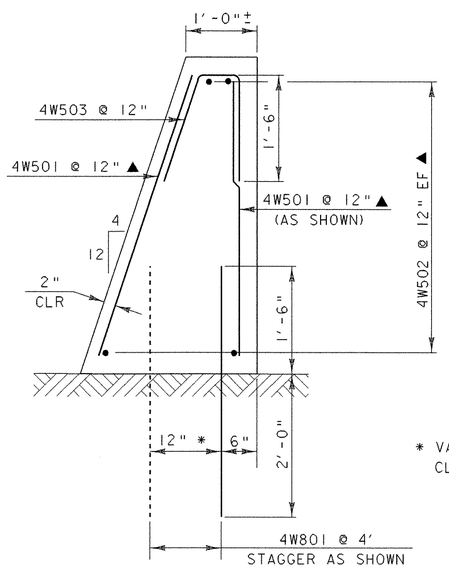

* VARY SPACE AS REQUIRED TO PROVIDE CLEAR COVER ON BATTERED SIDE

WINGWALL NO. 4 TYPICAL SECTION

SCALE 1" = 1'-0"

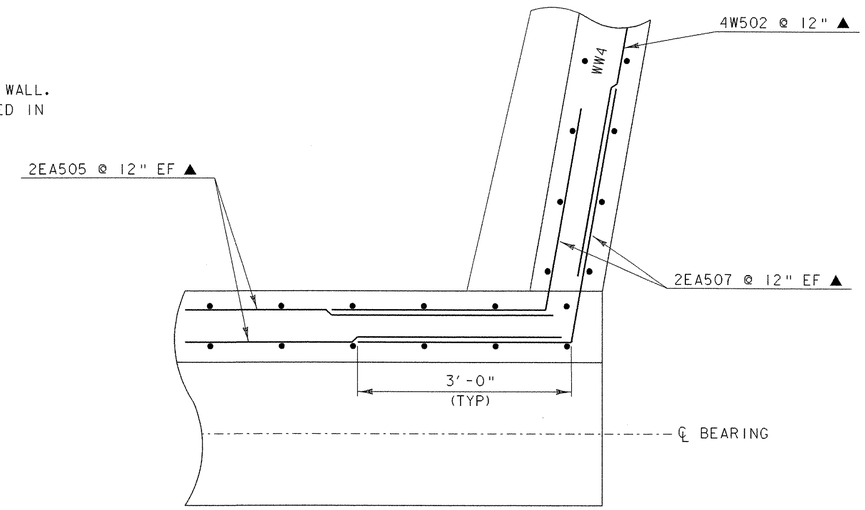

ABUTMENT NO. 2 CORNER DETAILS
(BELOW BRIDGE DECK SEAT)

SCALE 1" = 1'-0"

NOTE:

NF = NEAR FACE
FF = FAR FACE
EF = EACH FACE
▲ = CUT TO FIT IN FIELD
3" CLR. UNLESS OTHERWISE SPECIFIED ON THE PLANS
ALL LAPS SHALL BE 2'-2" UNLESS NOTED OTHERWISE

1 0 1 2
SCALE ½" = 1'-0

1 9 6 3 0 1 2
SCALE 1" = 1'-0

PROJECT NAME: MORRISTOWN	
PROJECT NUMBER: BRZ 1446 (15)	
FILE NAME: 88j101/structures/sj101sub.dgn IPARM NAME:88j101/structures/sj101ww4.i PROJECT LEADER: C.P. WILLIAMS DESIGNED BY: P. ROWE WINGWALL NO. 4 DETAILS	PLOT DATE: 03-NOV-2005 DRAWN BY: T. ANDERSON CHECKED BY: K.M. HIGGINS SHEET 23 OF 48

STATE OF VERMONT
AGENCY OF TRANSPORTATION

REINFORCING STEEL SCHEDULE

ITEM	EACH	SIZE	LENGTH	MARK	TYPE	A	B	C	D	E	F	G	H	J	K	R	O
SUPERSTRUCTURE																	
	156	5	35'- 8"	ES501	STR												
△	420	5	16'- 10"	ES502	STR												
	204	5	4'- 8"	ES503	S5	1'- 0"	0'- 11"	0'- 8"	1'- 1"			1'- 0"					
	28	5	9'- 0"	ES504	S5	0'- 6"	2'- 6"	0'- 9"	5'- 3"			---					
ABUTMENT NO. 1																	
	12	5	18'- 3"	1A501	STR												
	19	5	3'- 11"	1A502	STR												
	19	5	10'- 9"	1A503	STR												
✳	20	5	9'- 10"	1A504	STR												
▲	28	5	22'- 6"	1A505	STR												
	22	5	4'- 2"	1EA506	STR												
	8	5	25'- 0"	1EA507	STR												
✳	20	7	7'- 0"	1A701	STR												
△	9	8	3'- 6"	1A801	STR												
	19	5	7'- 8"	1A508	16	2'- 4"	2'- 7"	1'- 3"	1'- 6"				---		---		
	22	5	5'- 7"	1EA509	22		1'- 6"	4'- 1"	---				---		---		
▲	22	5	9'- 7"	1EA510	S10		4'- 6"	0'- 7"	4'- 6"								
▲	34	5	14'- 2"	1A511	22		3'- 8"	10'- 6"	---				1'- 7"	---	3'- 3"	---	
▲	34	5	12'- 9"	1A512	22		3'- 3"	9'- 6"	---				2'- 11"	---	1'- 1"	---	
✳	20	7	8'- 10"	1A702	17		3'- 7"	5'- 3"	---								
WINGWALL NO. 1																	
	26	5	20'- 5"	1W501	STR												
	38	5	3'- 11"	1W502	STR												
▲	38	5	15'- 11"	1W503	STR												
✳	38	5	11'- 0"	1W504	STR												
	34	5	29'- 9"	1W505	STR												
	19	8	3'- 6"	1W801	STR												
△	40	9	8'- 0"	1W901	STR												
	38	5	5'- 5"	1W506	S10		2'- 2"	1'- 1"	2'- 2"								
△	39	6	8'- 4"	1W601	17		3'- 1"	5'- 3"	---								
	37	7	10'- 1"	1W701	17		1'- 2"	8'- 11"	---								
WINGWALL NO. 2																	
	26	5	24'- 9"	2W501	STR												
	47	5	3'- 11"	2W502	STR												
▲	47	5	15'- 11"	2W503	STR												
	45	5	11'- 0"	2W504	STR												
	68	5	20'- 9"	2W505	STR												
	23	8	3'- 6"	2W801	STR												
	48	9	8'- 0"	2W901	STR												
	47	5	5'- 5"	2W506	S10		2'- 2"	1'- 1"	2'- 2"								
	45	6	8'- 4"	2W601	17		3'- 1"	5'- 3"	---								
	46	7	10'- 1"	2W701	17		1'- 2"	8'- 11"	---								

ITEM	EACH	SIZE	LENGTH	MARK	TYPE	A	B	C	D	E	F	G	H	J	K	R	O
ABUTMENT NO. 2																	
	8	5	24'- 6"	2A501	STR												
	26	5	2'- 6"	2A502	STR												
△ ▲	28	5	6'- 6"	2EA503	STR												
▲	10	5	24'- 6"	2EA504	STR												
▲	15	8	3'- 6"	2A801	STR												
▲	26	5	9'- 1"	2EA505	17		2'- 7"	6'- 6"	---								
	26	5	4'- 11"	2EA506	22		2'- 2"	0'- 7"	2'- 2"								
▲	10	5	6'- 0"	2EA507	22		3'- 0"	3'- 0"	---				2'- 11"	---	0'- 7"	---	
WINGWALL NO. 4																	
▲	66	5	4'- 3"	4W501	STR												
▲	18	5	25'- 0"	4W502	STR												
	11	8	3'- 6"	4W801	STR												
	22	5	3'- 7"	4W503	16	---	1'- 6"	0'- 7"	1'- 6"				0'- 6"		1'- 5"		

~ NOTES ~

1. UNLESS OTHERWISE DESIGNATED, ALL BAR REINFORCEMENT FOR CONCRETE IN SIZES UP TO AND INCLUDING NO. 18 SHALL CONFORM TO THE REQUIREMENTS OF THE "SPECIFICATIONS FOR DEFORMED BILLET-STEEL BARS FOR CONCRETE REINFORCEMENT", AASHTO M 31 (ASTM A 615-SI). ALL BARS SHALL BE GRADE 60, UNLESS OTHERWISE DESIGNATED.
2. FOR TYPICAL BENDING DETAILS, RECOMMENDED PIN DIAMETER "D" OF BENDS AND HOOKS, AND OTHER STANDARD PRACTICE, SEE CURRENT CONCRETE REINFORCING STEEL INSTITUTE "MANUAL OF STANDARD PRACTICE".
3. BARS WHICH REQUIRE MORE ACCURATE BENDING THAN STANDARD PRACTICES SHOULD HAVE LIMITS INDICATED.
4. ALL DIMENSIONS ARE OUT TO OUT OF BAR EXCEPT "A" AND "G" ON STANDARD 180 DEGREE AND 135 DEGREE HOOKS.
5. "J" DIMENSION ON 180 DEGREE HOOKS TO BE SHOWN ONLY WHERE NECESSARY TO RESTRICT HOOK SIZE. OTHERWISE, STANDARD HOOKS ARE TO BE USED.
6. "H" DIMENSION ON STIRRUPS TO BE SHOWN ONLY WHEN NECESSARY TO MAINTAIN CLEARANCES.
7. WHERE SLOPE DIFFERS FROM 45 DEGREES, DIMENSIONS "H" AND "K" MUST BE SHOWN.
8. ▲ DENOTES BARS TO BE CUT IN FIELD.
9. ✳ DENOTES ONE EXTRA BAR ADDED FOR TESTING PURPOSES.
10. △ DENOTES TWO EXTRA BARS ADDED FOR TESTING PURPOSES.
11. E IN BAR MARK PREFIX DENOTES EPOXY COATED REINFORCING STEEL.

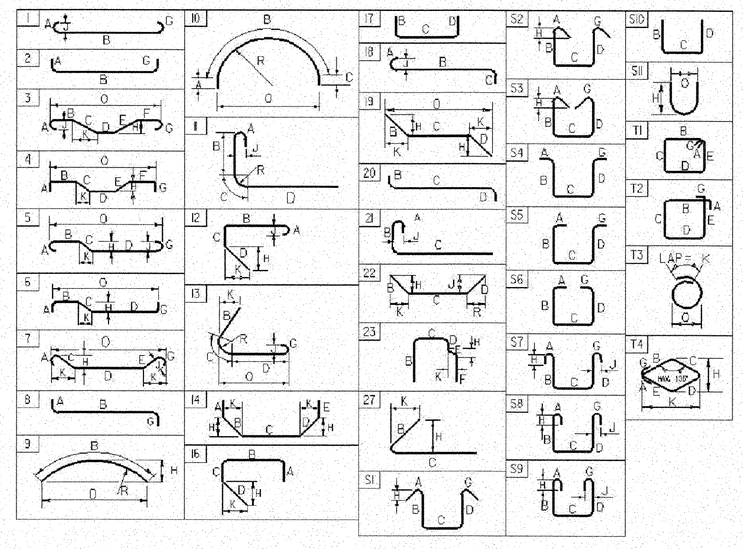

ASTM STANDARD REINFORCING BARS

BAR SIZE DESIGNATION	WEIGHT POUNDS PER FOOT	NOMINAL DIMENSIONS ROUND SECTION		
		DIAMETER INCHES	AREA INCHES ^{2}	PERIMETER INCHES
#3	0.376	0.375	0.11	1.178
#4	0.668	0.500	0.20	1.571
#5	1.043	0.625	0.31	1.963
#6	1.502	0.750	0.44	2.356
#7	2.044	0.875	0.60	2.749
#8	2.670	1.000	0.79	3.142
#9	3.400	1.128	1.00	3.544
#10	4.303	1.270	1.27	3.990
#11	5.313	1.410	1.56	4.430
#14	7.65	1.693	2.25	5.32
#18	13.60	2.257	4.00	7.09

PROJECT NAME: MORRISTOWN
PROJECT NUMBER: BRZ 1446 (15)

FILE NAME: sj101rss.xls
PROJECT MANAGER: C.P. Williams
DESIGNED BY: D. A. Eckstein
REINFORCING STEEL SCHEDULE SHEET #1

PLOT DATE: 9/7/2005
DRAWN BY: D. A. Eckstein
CHECKED BY: K. M. HIGGINS
SHEET 24 OF 48

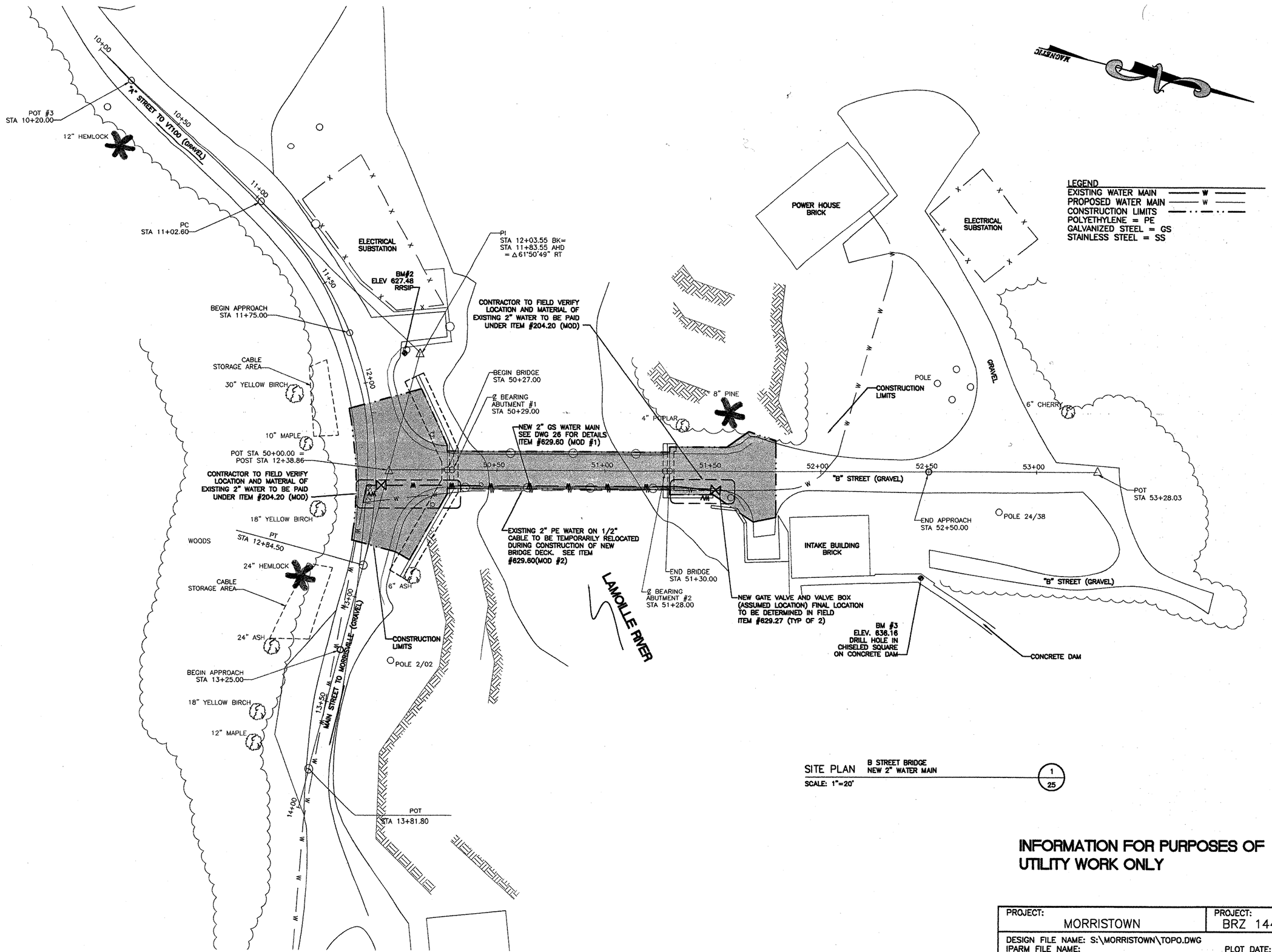

SITE PLAN B STREET BRIDGE NEW 2" WATER MAIN

SCALE: 1"=20'

1/25

INFORMATION FOR PURPOSES OF UTILITY WORK ONLY

PROJECT: MORRISTOWN	PROJECT: BRZ 1446 (15)
DESIGN FILE NAME: S:\MORRISTOWN\TOPO.DWG	
IPARM FILE NAME:	PLOT DATE: 12/01
SURVEYED BY: R. GILMAN	SURVEY DATE: 4/89
SQUAD LEADER: C.P. WILLIAMS	DRAWN BY: B. TERHUNE
SITE PLAN	SHEET: 1 OF 3

Dufresne-Henry
Williston, Vermont
Tel. (802) 846-1430 • FAX (802) 846-1435
www.dufresne-henry.com

Rev.	Description	By	Date

VERMONT

MORRISVILLE B STREET BRIDGE REPLACEMENT

SITE PLAN

MORRISTOWN

Project No.	6513004
Proj. Manager	AGT
Proj. Designer	BAT
Drawn By	BAT
Checked By	AGT
Scale	AS SHOWN
Approved	AGT
Date	10/02

25

scan_ut1

Sheet 1 of 3

D 6513004

K:\6513004 (MORRISTOWN)\TOPO.dwg, Site Plan, 02/12/2003 10:24:18 AM, bterhune

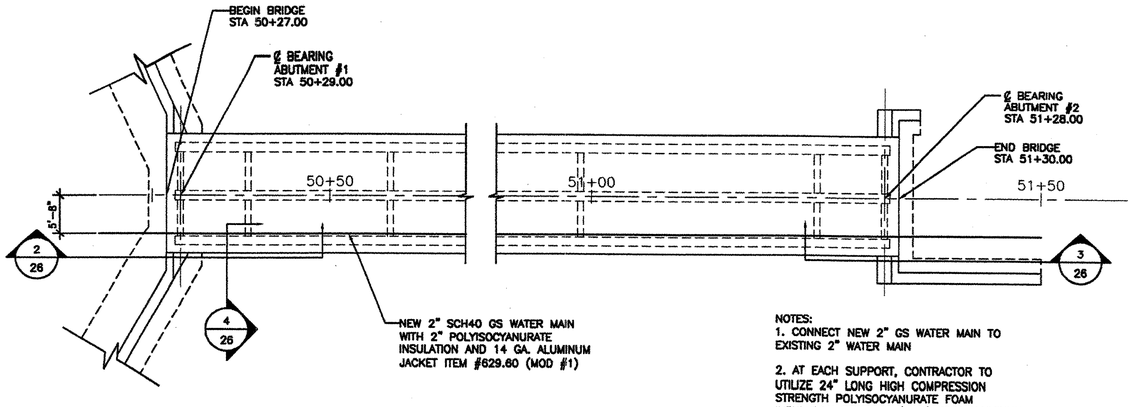

NOTES:
1. CONNECT NEW 2" GS WATER MAIN TO EXISTING 2" WATER MAIN

2. AT EACH SUPPORT, CONTRACTOR TO UTILIZE 24" LONG HIGH COMPRESSION STRENGTH POLYISOCYANURATE FOAM INSULATION SECTIONS (360°) WITH ALUMINUM 14 GAUGE 360° INSULATION PROTECTION SHIELD, 24" LONG TOP AND BOTTOM AND CENTERED ON SUPPORT.

PARTIAL PLAN NEW BRIDGE 2" WATER MAIN PIPING (1/26)
SCALE: 1"=20'

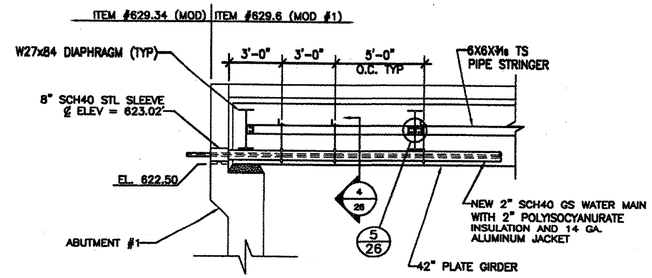

SECTION ABUTMENT #1 2" WATER MAIN SUPPORT STEEL (2/26)
SCALE: 1/4"=1'-0"

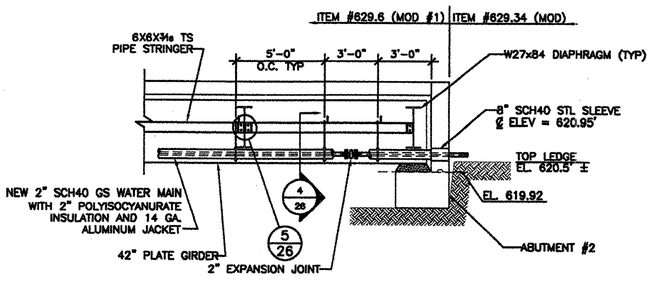

SECTION ABUTMENT #2 2" WATER MAIN SUPPORT STEEL (3/26)
SCALE: 1/4"=1'-0"

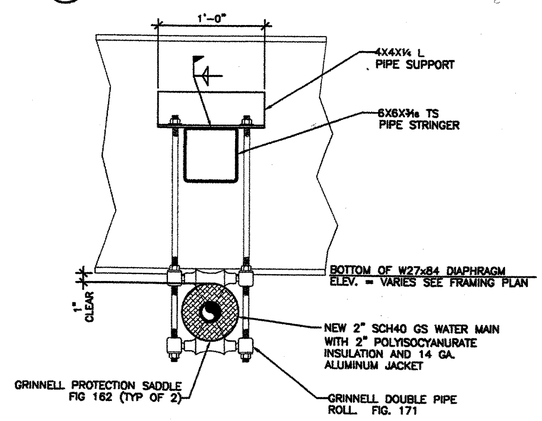

DETAIL TYPICAL PIPE SUPPORT (4/26)
SCALE: 1-1/2"=1'-0"

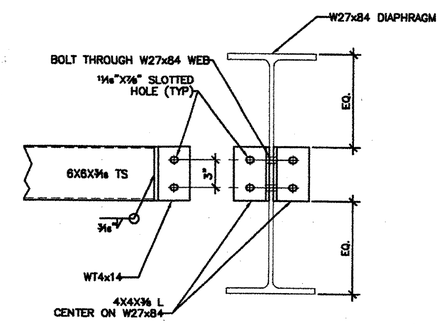

DETAIL TYPICAL PIPE STRINGER DIAPHRAGM CONNECTION (5/26)
SCALE: 1-1/2"=1'-0"

PIPE HANGER NOTES:
1. ALL STRUCTURAL ANGLES,TEES, AND PLATES SHALL CONFORM TO AASHTO M270 GRADE 50W, UNLESS NOTED OTHERWISE

2. ALL STRUCTUAL STEEL TUBES SHALL CONFORM TO ASTM A-847 UNLESS NOTED OTHERWISE.

3. ALL CONNECTIONS TO BE MADE USING 5/8"ø AASHTO M164 (TYPE 3) BOLTS, UNLESS NOTED OTHERWISE.

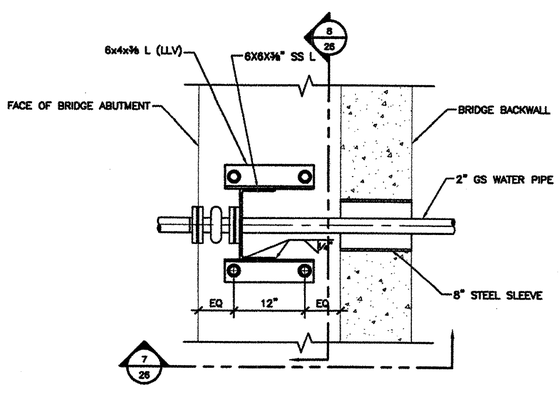

DETAIL TYPICAL PIPE RESTRAINT (6/26)
SCALE: 1-1/2"=1'-0"

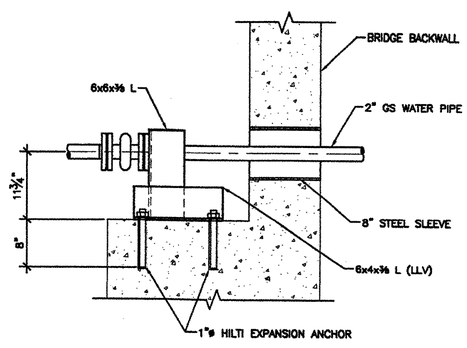

DETAIL TYPICAL PIPE RESTRAINT (7/26)
SCALE: 1-1/2"=1'-0"

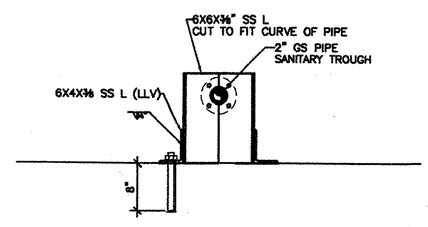

DETAIL TYPICAL PIPE RESTRAINT BOLT EMBEDDMENT (8/26)
SCALE: NTS

INFORMATION FOR PURPOSES OF UTILITY WORK ONLY

PROJECT: MORRISTOWN	PROJECT: BRZ 1446 (15)
DESIGN FILE NAME: S:\MORRISTOWN\PIPESUPPORT.DWG	
IPARM FILE NAME:	PLOT DATE: 12/01
SURVEYED BY: R. GILMAN	SURVEY DATE: 4/89
SQUAD LEADER: C.P. WILLIAMS	DRAWN BY: B. TERHUNE
BRIDGE PIPING DETAILS	SHEET: 2 OF 3

Dufresne-Henry
Williston, Vermont
Tel. (802) 846-1436 • FAX (802) 846-1435
www.dufresne-henry.com

Rev.	Description	By	Date

VERMONT

MORRISVILLE B STREET
BRIDGE REPLACEMENT

BRIDGE PIPING DETAILS

MORRISTOWN

Project No.	6503004
Proj. Manager	AGT
Proj. Designer	BAT
Drawn By	BAT
Checked By	AGT
Scale	AS SHOWN
Approved	AGT
Date	10/02

26

Scan_ut2

Sheet 2 of 3

D 6513004

K:\6513004 (MORRISTOWN)\PIPESUPPORT.dwg, SHT 26, 02/12/2003 09:59:42 AM, bterhune

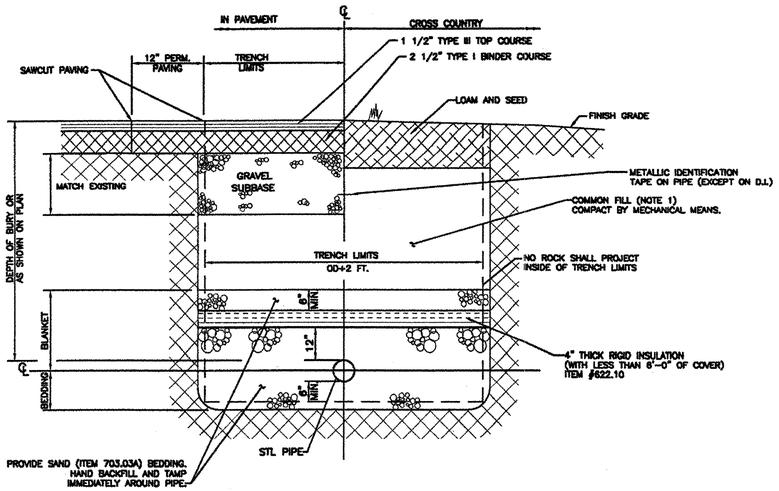

MATERIAL NOTES:
1. COMMON FILL – MATERIAL EXCAVATED ON SITE WHICH IS FRIABLE, NATURAL SOIL COMPOSED OF GRAVEL, SAND, OR SILTY OR CLAYEY GRAVEL AND SAND; FREE FROM DEBRIS, CONCRETE OR OTHER RUBBLE, ORGANIC MATTER, MUCK, PEAT, EXCAVATED ROCK AND BOULDERS OF 6 INCHES IN MAXIMUM DIMENSION OR GREATER.

2. CRUSHED GRAVEL: CLEAN HARD CRUSHED GRAVEL; FREE FROM SILT, TOPSOIL, CLAY, AND ORGANIC MATTER, UNIFORMLY GRADED FROM COARSE TO FINE WITHIN THE LIMITS SPECIFIED IN ASTM C136.

ROAD SURFACE RESTORATION NOTES:
3. WIDTH OF TRENCH AT STREET LEVEL SHALL BE KEPT AS NARROW AS POSSIBLE.

4. PAVEMENT UNDER THE ITEMS OF WORK SPECIFIED IN THE CONTRACT DOCUMENTS ARE TO THE LINES SHOWN. ADDITIONAL PAVEMENT WILL BE MADE WHERE WORK EXCEEDING THESE LINES IS ORDERED BY THE ENGINEER.

5. DEPTHS OF GRAVEL SHOWN ARE MINIMUM COMPACTED THICKNESSES.

DETAIL PIPE TRENCH FOR OPEN EXCAVATION (1/27)
SCALE: NTS

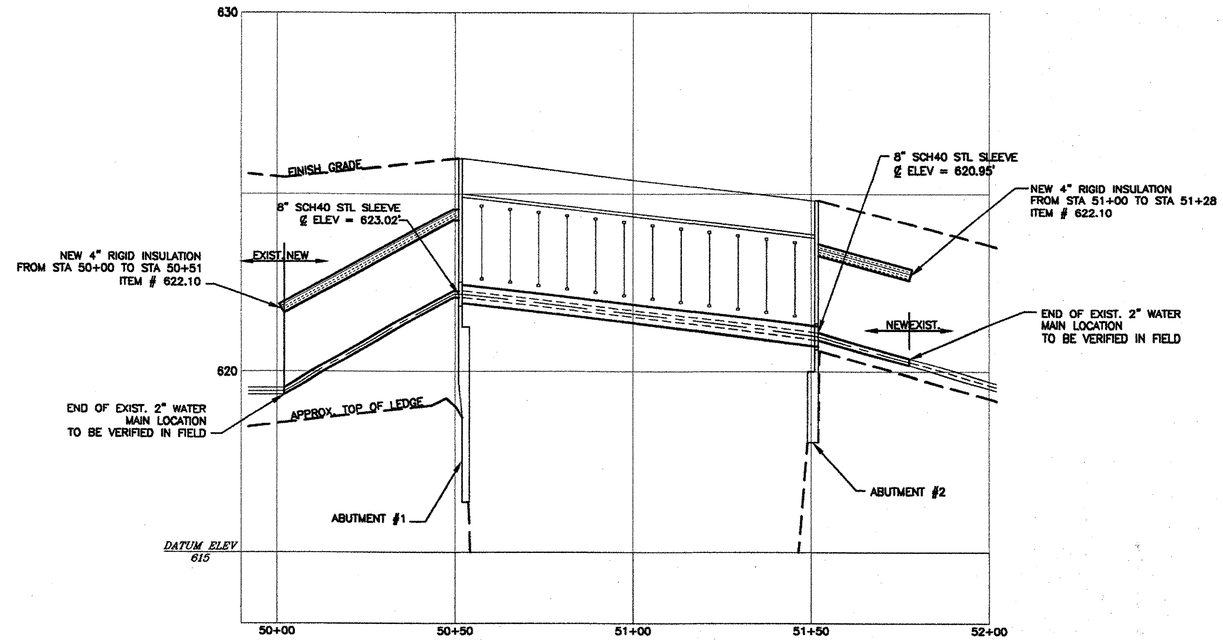

PROFILE NEW 2" WATER MAIN FACING DOWNSTREAM (2/27)
HORIZONTAL SCALE: 1"=20'
VERTICAL SCALE: 1"=2'

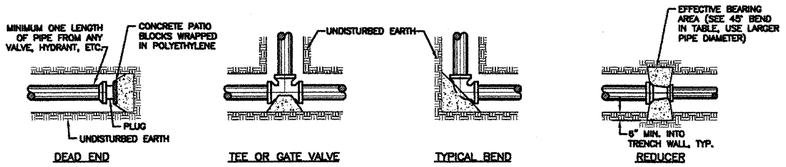

BEARING AREA IN SQUARE FEET FOR TYPICAL THRUST BLOCKS (DESIGN PRESSURE = 200 PSI)																		
FITTING/PIPE SIZE⇒	90° ELBOW						45° OR 22.5° ELBOW						TEE OR END					
SOIL TYPE ⇓	2"	4"	6"	8"	10"	12"	2"	4"	6"	8"	10"	12"	2"	4"	6"	8"	10"	12"
CLAY	1	5.5	11	19	28	40	1	3	6	10	15	22	1	4	8	13	22	28
SAND	1	3	5.5	9.5	14	20	1	1.5	3	5	8	11	1	2	4	6.5	11	14
SAND/GRAVEL	1	2	4	6.5	9.5	14	1	1	2	3.5	5	7.5	1	1.5	2.5	5	8	10
SAND/GRAVEL CEMENTED W/CLAY	1	2	3	5	7	10	1	1	1.5	2.5	4	6	1	1	2	4	5.5	7
HARD SHALE	1	1	1	2	3	4	1	1	1	1	1.5	1.5	1	1	1	1.5	2.5	3

NOTES:

1. POUR THRUST BLOCKS AGAINST UNDISTURBED MATERIAL. WHERE TRENCH WALL HAS BEEN DISTURBED, EXCAVATE LOOSE MATERIAL AND EXTEND THRUST BLOCK TO UNDISTURBED MATERIAL. NO JOINTS SHALL BE COVERED WITH CONCRETE. USE MINIMUM 3500 PSI CONCRETE.
2. ON BENDS AND TEES, EXTEND THRUST BLOCKS FULL LENGTH OF FITTING.
3. PLACE CONCRETE PATIO BLOCKS IN FRONT OF ALL PLUGS BEFORE POURING THRUST BLOCK.
4. MEGA-LUG RETAINER GLANDS ARE REQUIRED FOR ALL MECHANICAL JOINTS. THESE GLANDS DO NOT REDUCE THE REQUIREMENTS FOR THRUST RESTRAINT.
5. ALL FITTINGS SHALL BE WRAPPED IN 4 MIL POLYETHYLENE OR BUILDING PAPER PRIOR TO INSTALLATION OF CONCRETE RESTRAINT.
6. THREADED ROD SHALL BE ANSI A242 FY50 PIPE RESTRAINT NUTS TO MATCH AWWA C111. THREADED RODS AND NUTS TO BE FIELD COATED WITH BITUMINOUS PAINT.
7. THRUST RESTRAINT IS REQUIRED FOR ALL TEES, BENDS, REDUCERS, CAPS, PLUGS, OR CROSSES.
8. INSTALL LIFT HOOKS INTO THRUST BLOCKS AT END CAPS AND PLUGS.

DETAIL THRUST BLOCK (3/27)
SCALE: NTS

INFORMATION FOR PURPOSES OF UTILITY WORK ONLY

PROJECT: MORRISTOWN	PROJECT: BRZ 1446 (15)
DESIGN FILE NAME: S:\MORRISTOWN\TYPICAL DETAILS.DWG	
IPARM FILE NAME:	PLOT DATE: 12/01
SURVEYED BY: R. GILMAN	SURVEY DATE: 4/89
SQUAD LEADER: C.P. WILLIAMS	DRAWN BY: B. TERHUNE
TYPICAL DETAILS	SHEET: 3 OF 3

Dufresne-Henry
Tel: (802) 846-1400 • FAX (802) 846-1435
Williston, Vermont
www.dufresne-henry.com

Rev.	Description	By	Date

VERMONT

MORRISVILLE B STREET BRIDGE REPLACEMENT
TYPICAL DETAILS
MORRISTOWN

Project No.	6513004
Proj. Manager	AGT
Proj. Designer	BAT
Drawn By	BAT
Checked By	AGT
Scale	AS SHOWN
Approved	AGT
Date	02/12/2003

27
scan_ut3
Sheet 3 of 3
D 6513004

K:\6513004 (MORRISTOWN)\Typical Details.dwg, 27, 02/12/2003 10:24:57 AM, bterhune

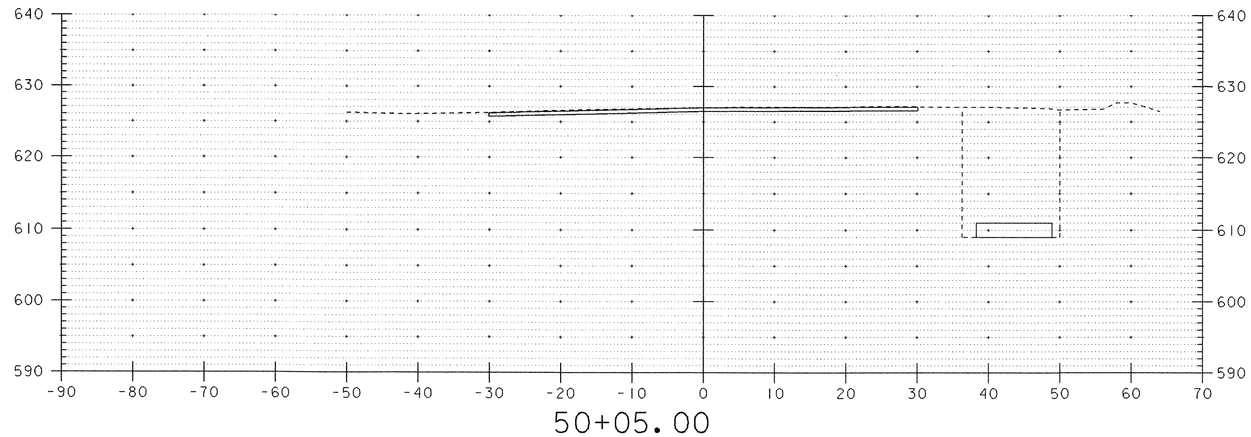

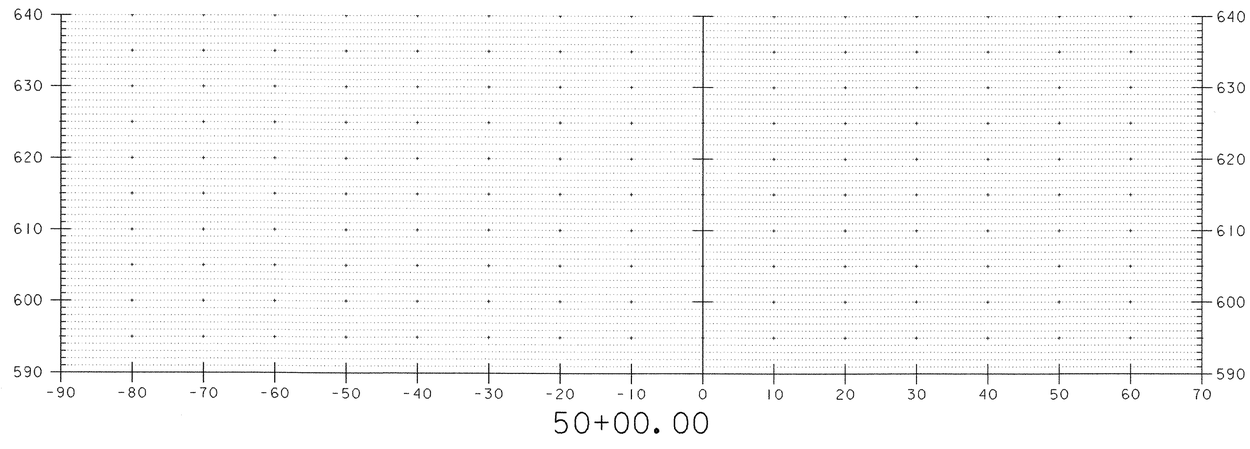

SCALE 1" = 10'-0
10 0 10

PROJECT: MORRISTOWN	PROJECT NO. : BRZ 1446 (15)
DESIGN FILE NAME: 88j101/structures/sj101xs1.dgn IPARM FILE NAME: sj101b1.i	PLOT DATE: 03-NOV-2005
"B" STREET CROSS SECTIONS	
SECTION 50+00 THROUGH 50+05	SHEET: 28 OF 48

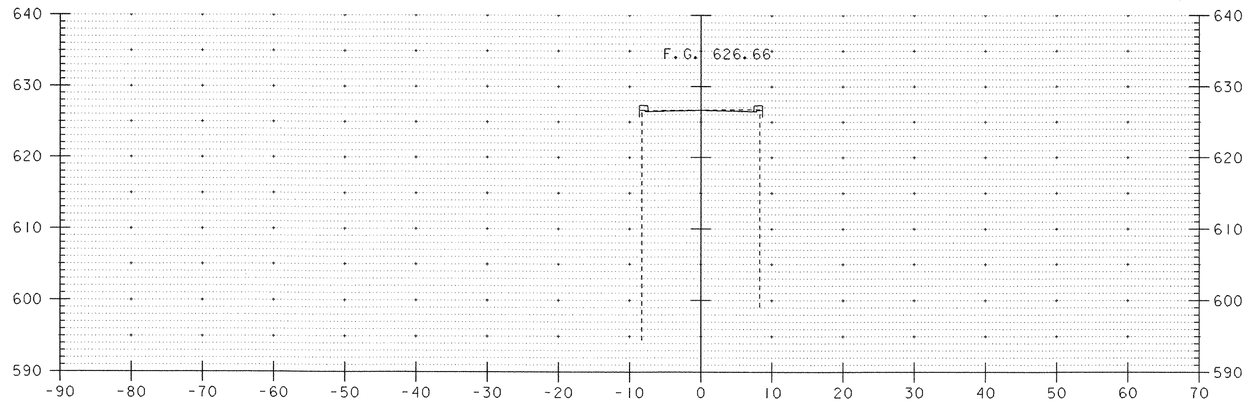

50+50.00

STATION 50+27.00
BEGIN BRIDGE

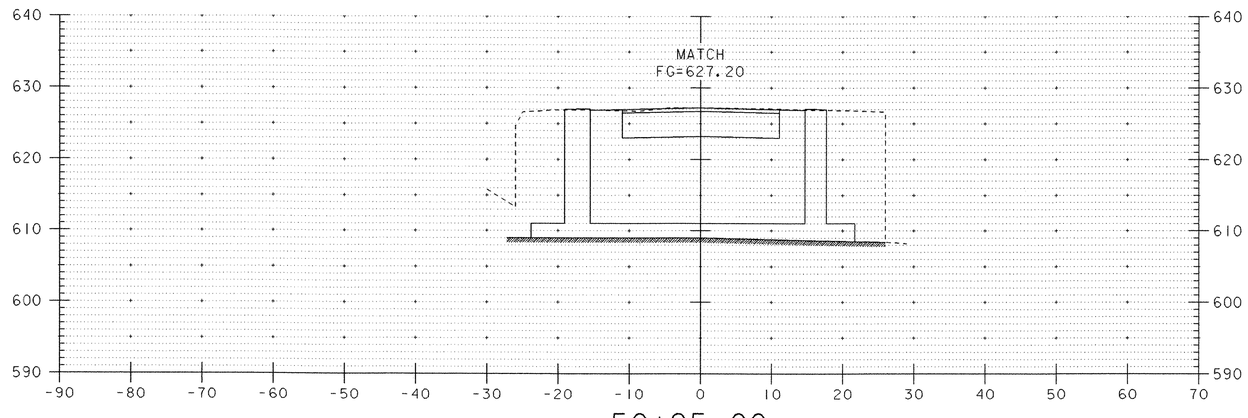

50+25.00

STATION 50+20.00
BEGIN PROJECT
END APPROACH

SCALE 1" = 10'-0
10 0 10

PROJECT: MORRISTOWN	PROJECT NO. : BRZ 1446 (15)
DESIGN FILE NAME: 88j101/structures/sj101xs1.dgn IPARM FILE NAME: sj101b2.i	PLOT DATE: 03-NOV-2005
"B" STREET CROSS SECTIONS	
SECTION 50+25 THROUGH 50+50	SHEET: 29 OF 48

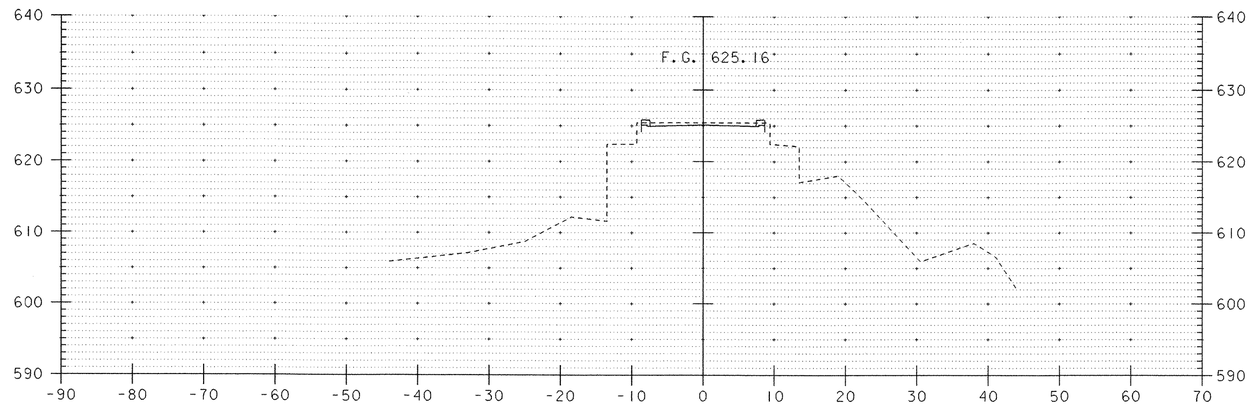

51+19.50

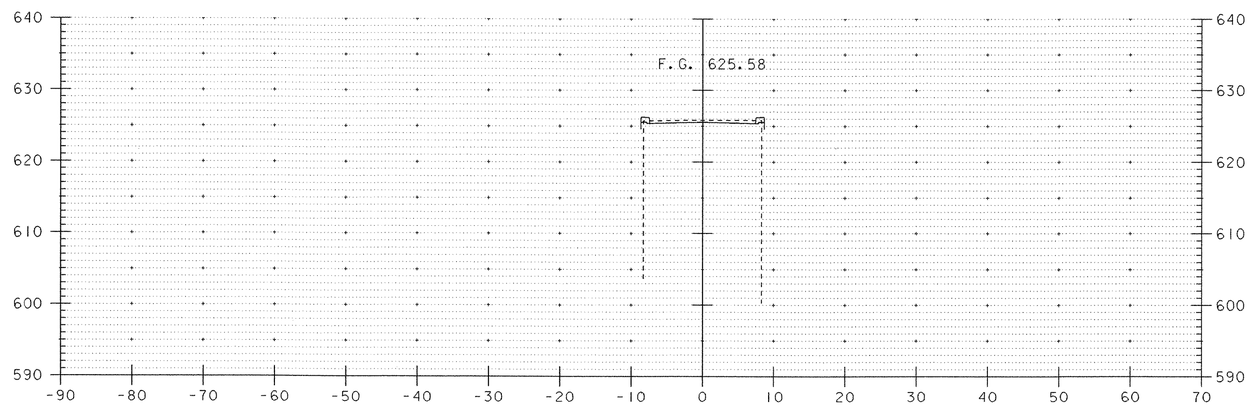

51+00.00

SCALE 1" = 10'-0
10 0 10

PROJECT: MORRISTOWN	PROJECT NO. : BRZ 1446 (15)
DESIGN FILE NAME: 88j101/structures/sj101xs1.dgn	
IPARM FILE NAME: sj101b3.i	PLOT DATE: 03-NOV-2005
"B" STREET CROSS SECTIONS	
SECTION 51+00 THROUGH 51+19.50	SHEET: 30 OF 48

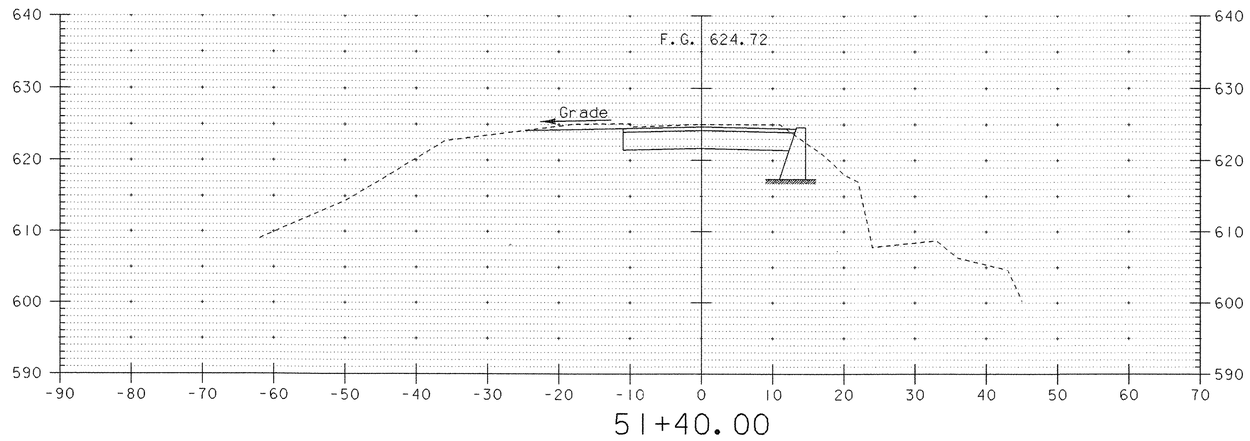

STATION 51+30.00
END BRIDGE

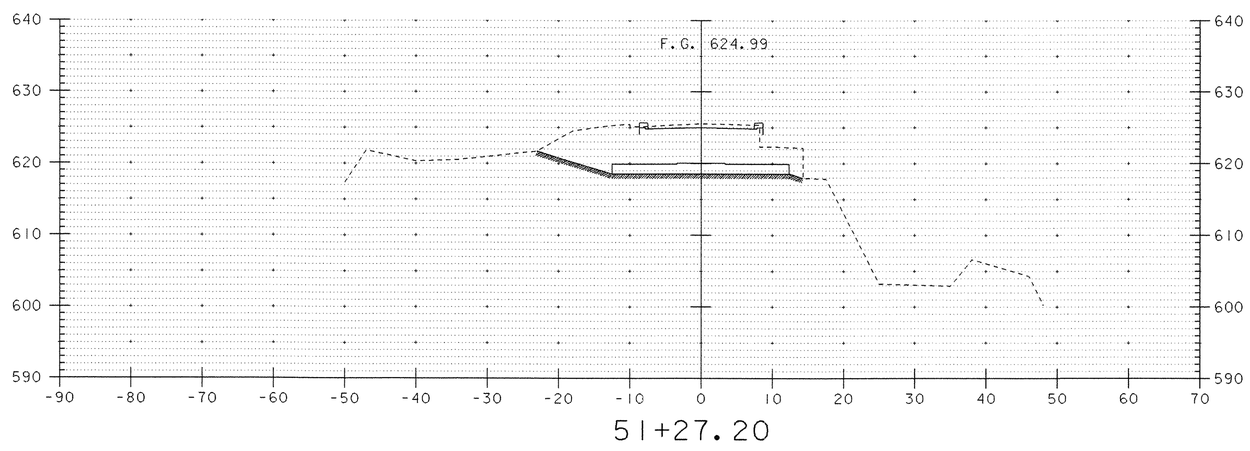

SCALE 1" = 10'-0
10 0 10

PROJECT: MORRISTOWN	PROJECT NO. : BRZ 1446(15)
DESIGN FILE NAME: 88j101/structures/sj101xs1.dgn IPARM FILE NAME: sj101b4.i	PLOT DATE: 03-NOV-2005
"B" STREET CROSS SECTIONS	
SECTION 51+27.20 THROUGH 51+40	SHEET: 31 OF 48

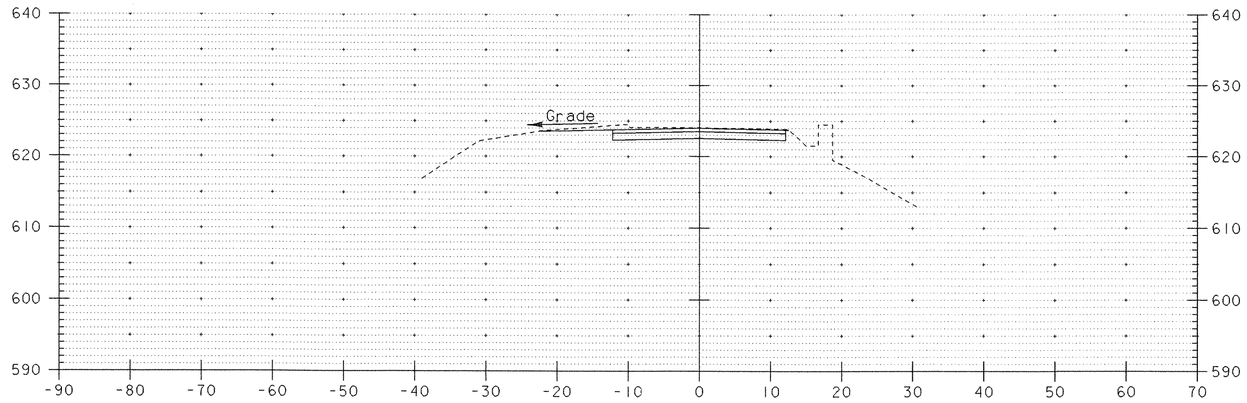

51+62.00

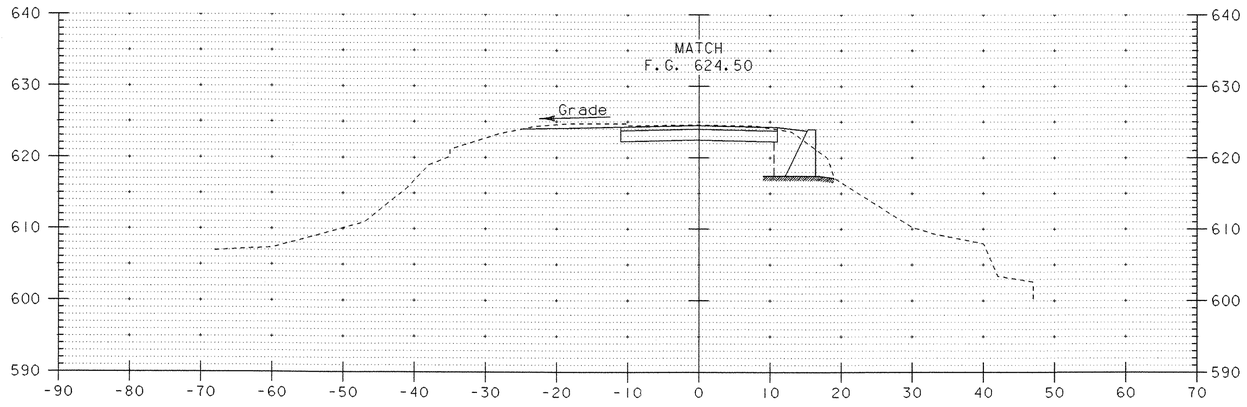

51+50.00

STATION 51+50.00
END PROJECT
BEGIN APPROACH

SCALE 1" = 10'-0
10 0 10

PROJECT: MORRISTOWN	PROJECT NO. : BRZ 1446 (15)
DESIGN FILE NAME: 88j101/structures/sj101xs1.dgn IPARM FILE NAME: sj101b5.i	PLOT DATE: 03-NOV-2005
"B" STREET CROSS SECTIONS	
SECTION 51+50 THROUGH 51+62	SHEET: 32 OF 48

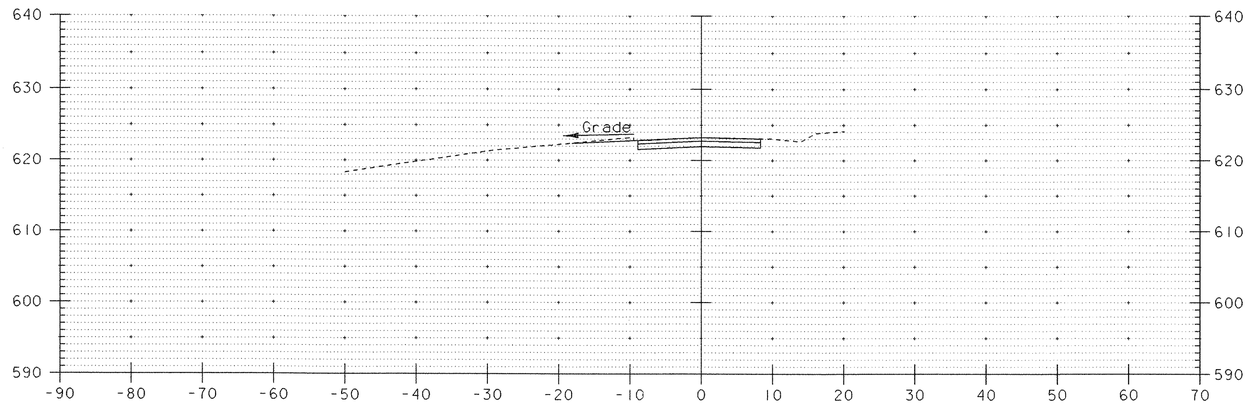

52+00.00

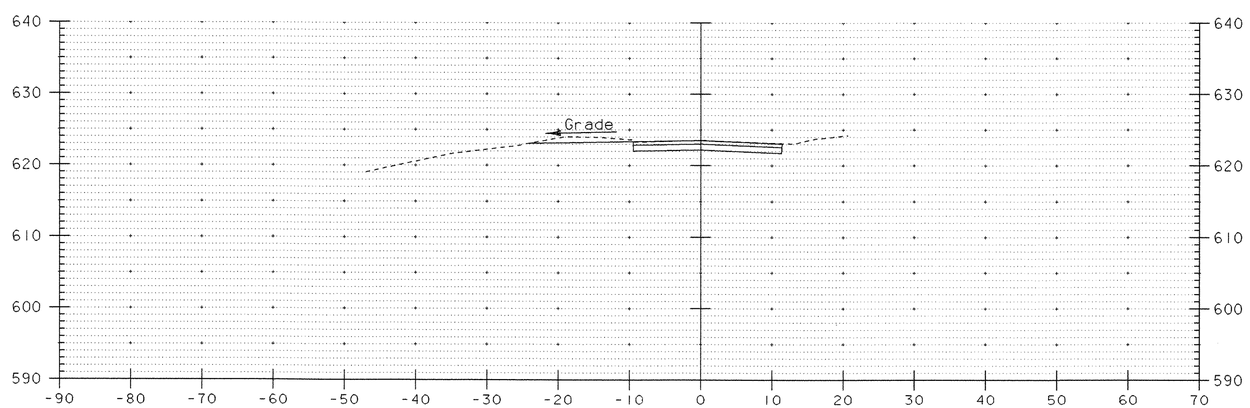

51+86.00

SCALE 1" = 10'-0
10 0 10

PROJECT: MORRISTOWN	PROJECT NO. : BRZ 1446 (15)
DESIGN FILE NAME: 88j101/structures/sj101xs1.dgn IPARM FILE NAME: sj101b6.i	PLOT DATE: 03-NOV-2005
"B" STREET CROSS SECTIONS	
SECTION 51+86 THROUGH 52+00	SHEET: 33 OF 48

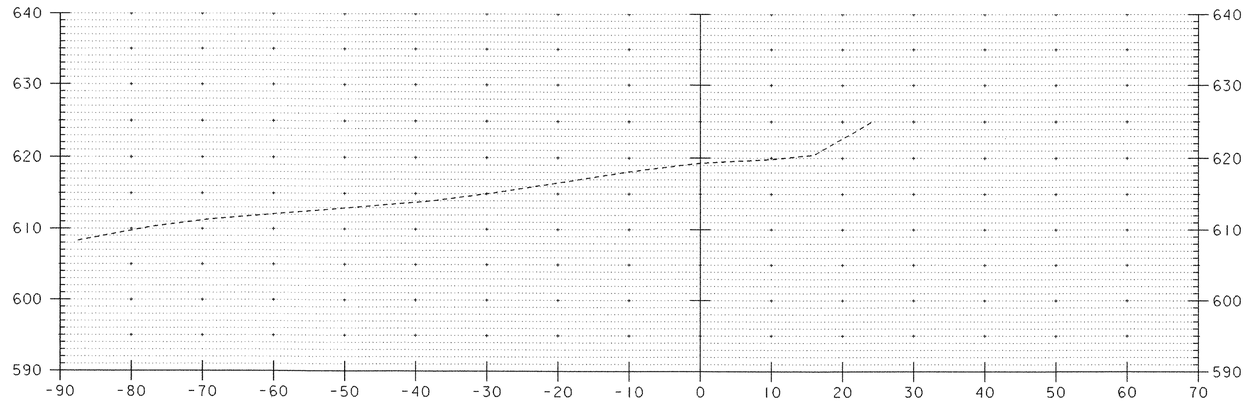

52+75.00

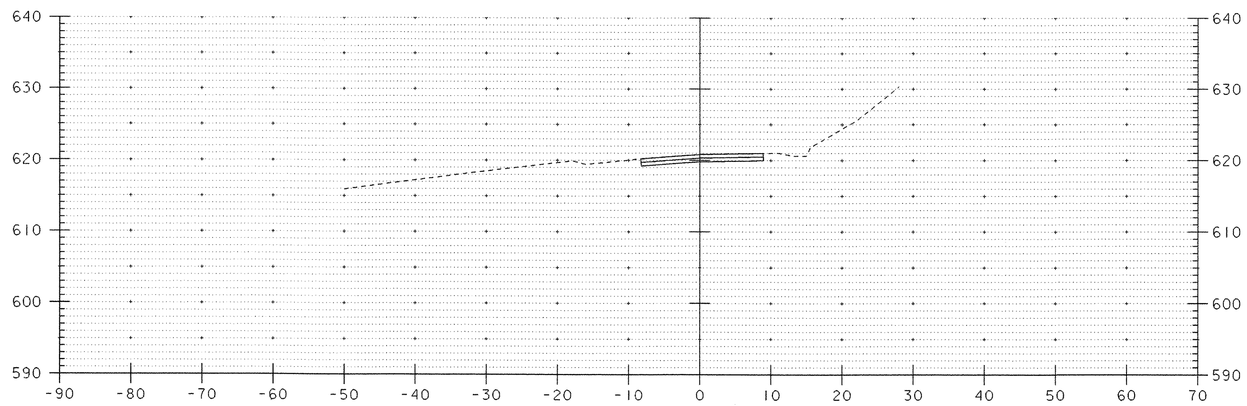

52+50.00

STATION 52+50.00
END APPROACH

SCALE 1" = 10'-0
10 0 10

PROJECT: MORRISTOWN	PROJECT NO. : BRZ 1446 (15)
DESIGN FILE NAME: 88j101/structures/sj101xs1.dgn IPARM FILE NAME: sj101b7.i	PLOT DATE: 03-NOV-2005
"B" STREET CROSS SECTIONS	
SECTION 52+50 THROUGH 52+75	SHEET: 34 OF 48

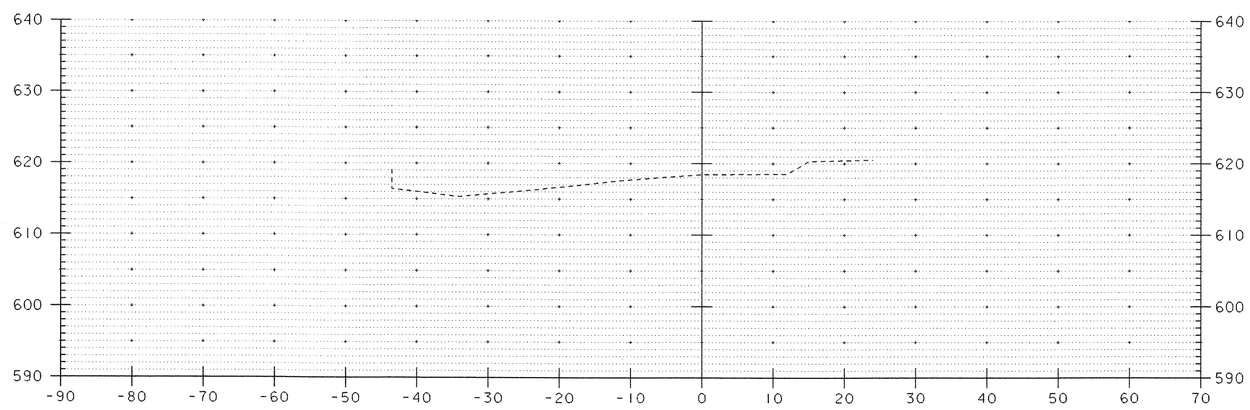

53+00.00

SCALE 1" = 10'-0

10 0 10

PROJECT: MORRISTOWN	PROJECT NO. : BRZ 1446 (15)
DESIGN FILE NAME: 88j101/structures/sj101xs1.dgn IPARM FILE NAME: sj101b8.i	PLOT DATE: 03-NOV-2005
"B" STREET CROSS SECTIONS	
SECTION 53+00	SHEET: 35 OF 48

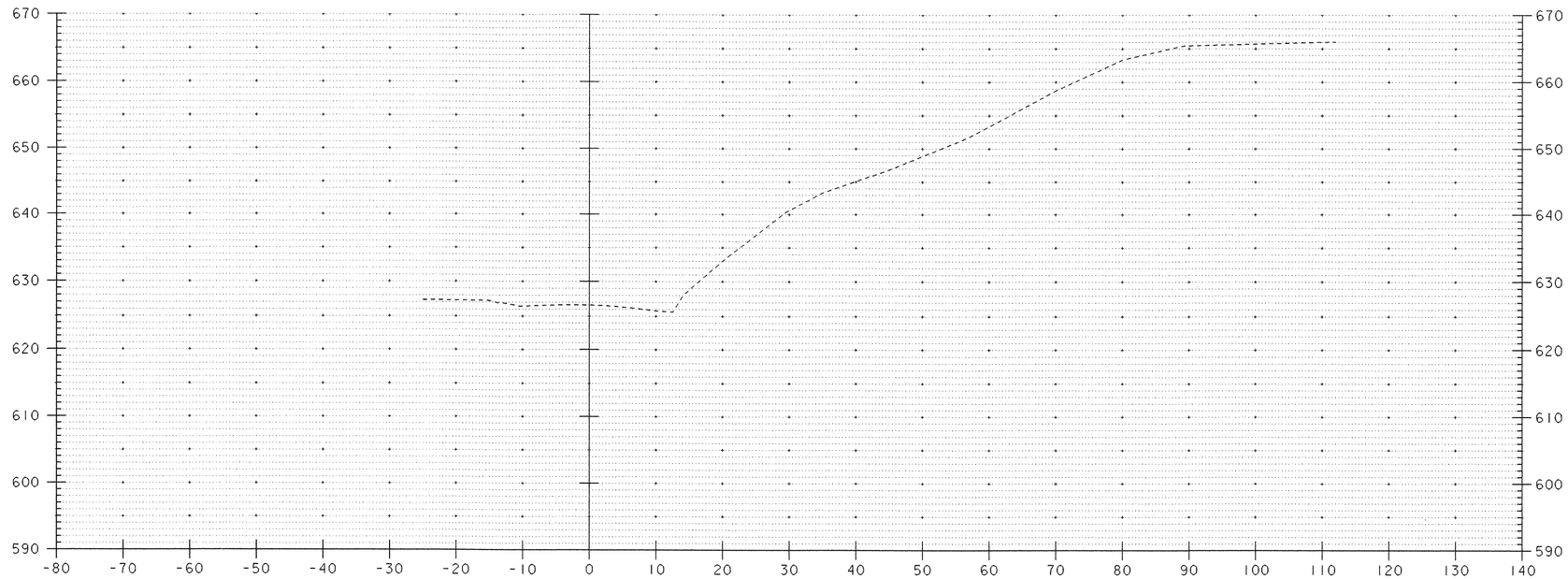

11+50.00

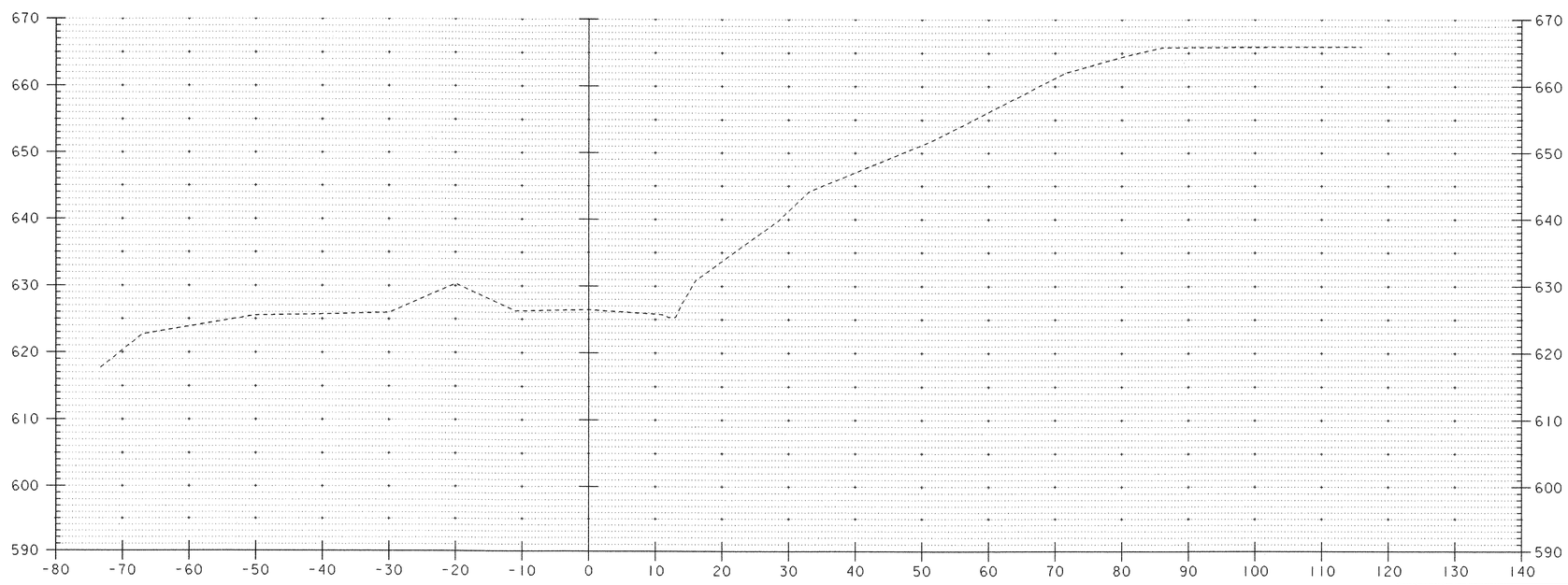

11+00.00

SCALE 1" = 10'-0
10 0 10

PROJECT: MORRISTOWN	PROJECT NO. : BRZ 1446 (15)
DESIGN FILE NAME: 88j101/structures/sj101xs1.dgn IPARM FILE NAME: sj101a1.i	PLOT DATE: 03-NOV-2005
MAIN/"A" STREET CROSS SECTIONS	
SECTION 11+00 THROUGH 11+50	SHEET: 36 OF 48

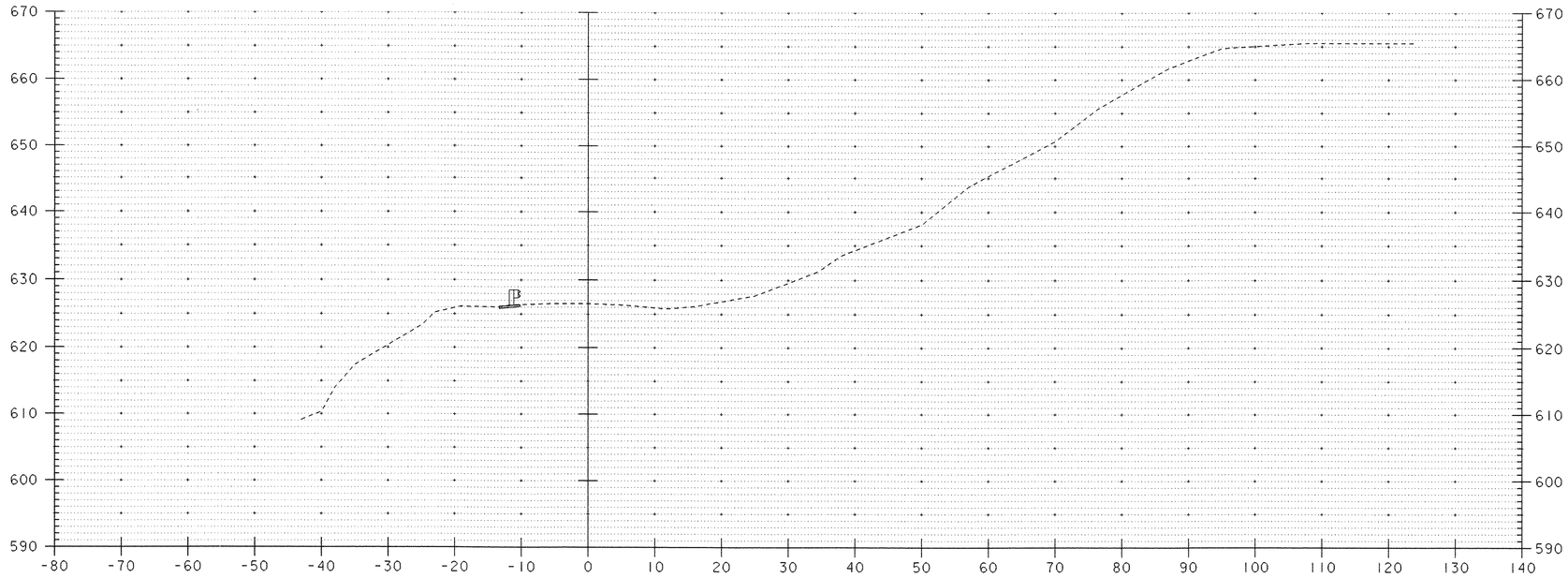

12+00.00

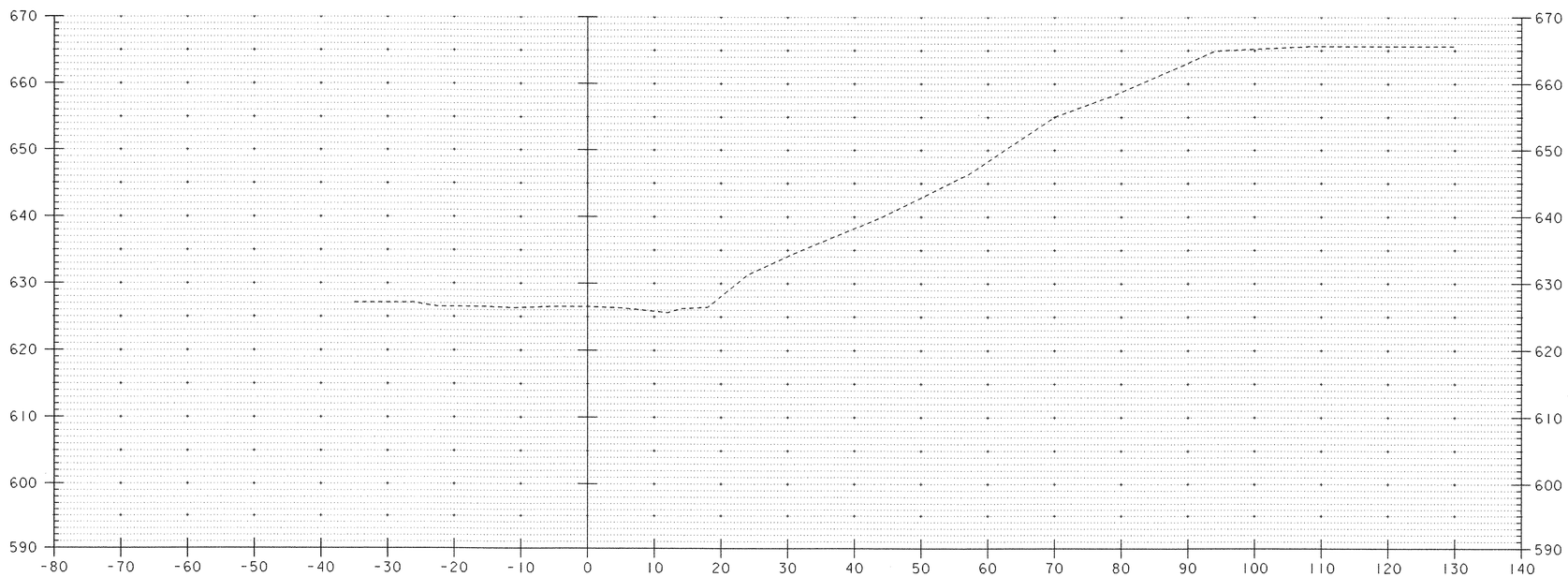

11+75.00

SCALE 1" = 10'-0
10 0 10

PROJECT: MORRISTOWN	PROJECT NO. : BRZ 1446 (15)
DESIGN FILE NAME: 88j101/structures/sj101xs1.dgn IPARM FILE NAME: sj101a2.i	PLOT DATE: 03-NOV-2005
MAIN/"A" STREET CROSS SECTIONS	
SECTION 11+75 THROUGH 12+00	SHEET: 37 OF 48

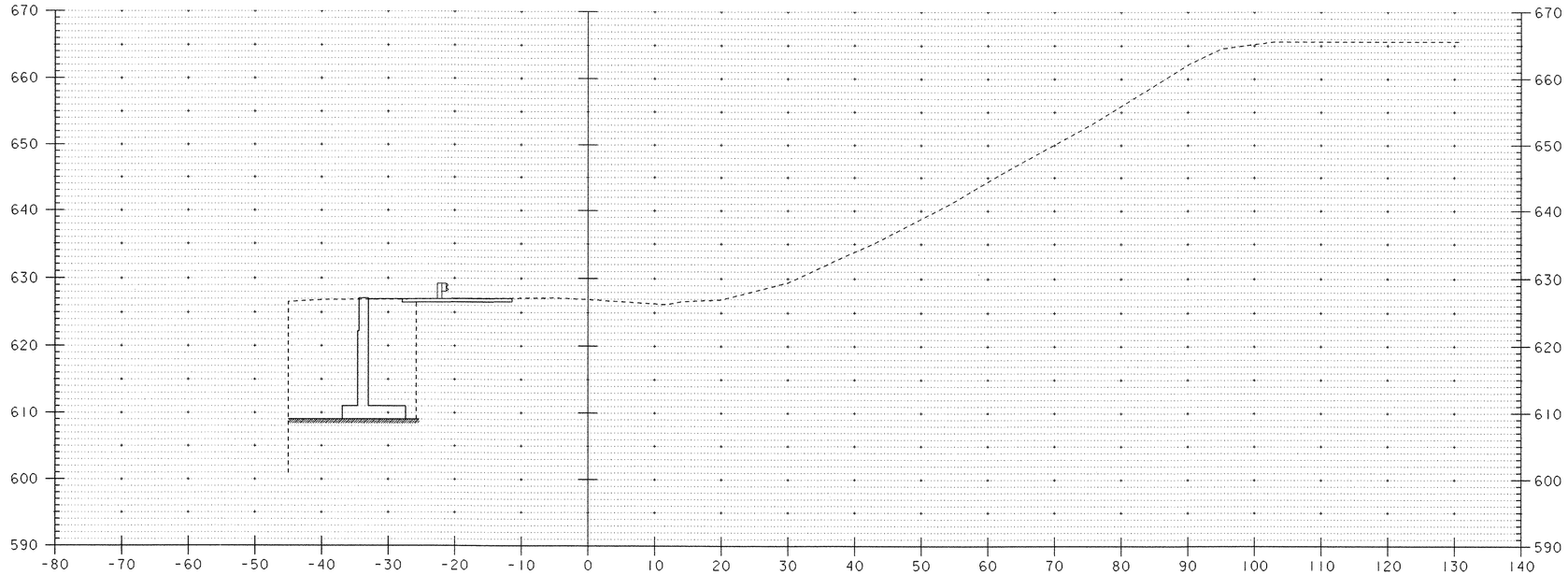

12+50.00

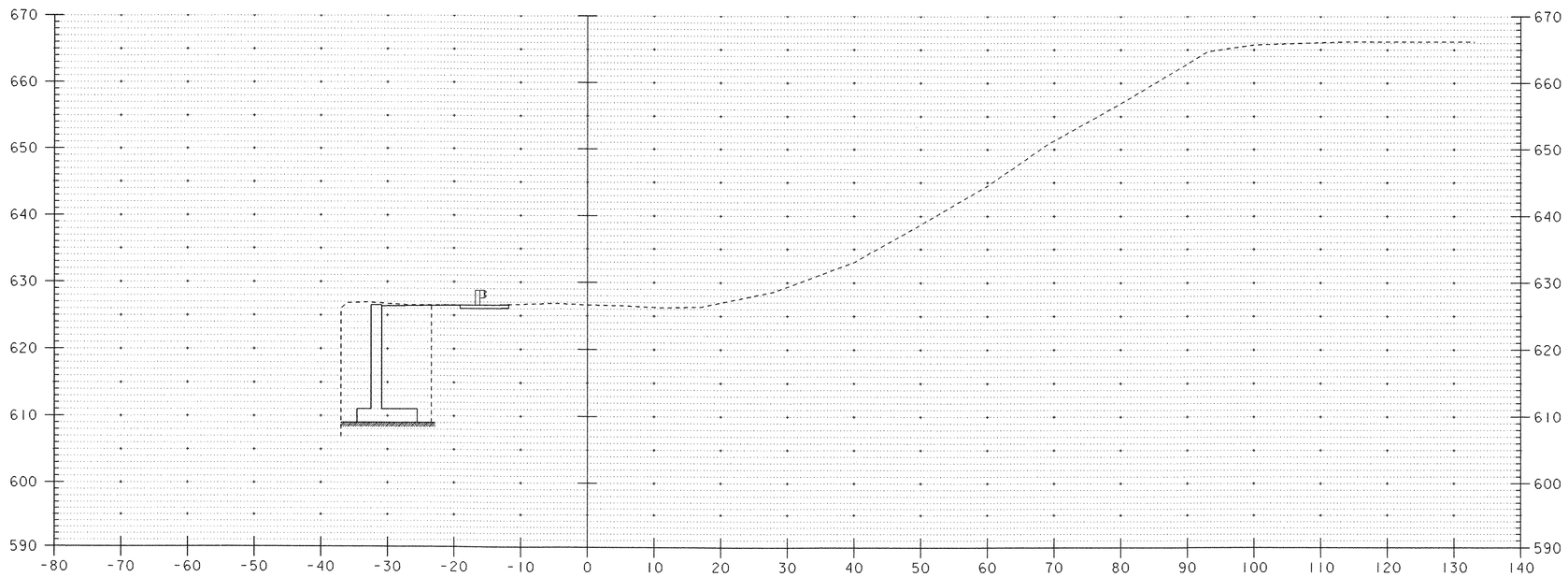

12+25.00

SCALE 1" = 10'-0
10 0 10

PROJECT: MORRISTOWN	PROJECT NO. : BRZ 1446 (15)
DESIGN FILE NAME: 88j101/structures/sj101xs1.dgn IPARM FILE NAME: sj101a3.i	PLOT DATE: 03-NOV-2005
MAIN/"A" STREET CROSS SECTIONS	
SECTION 12+25 THROUGH 12+50	SHEET: 38 OF 48

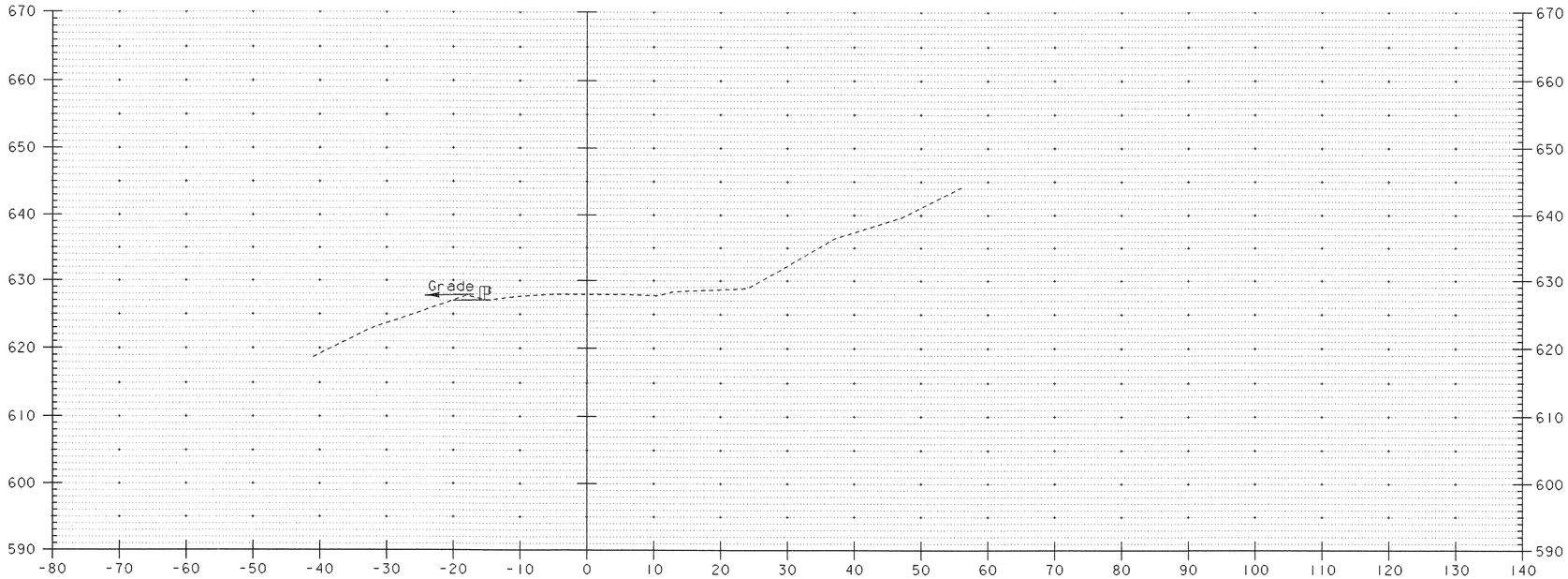

13+00.00

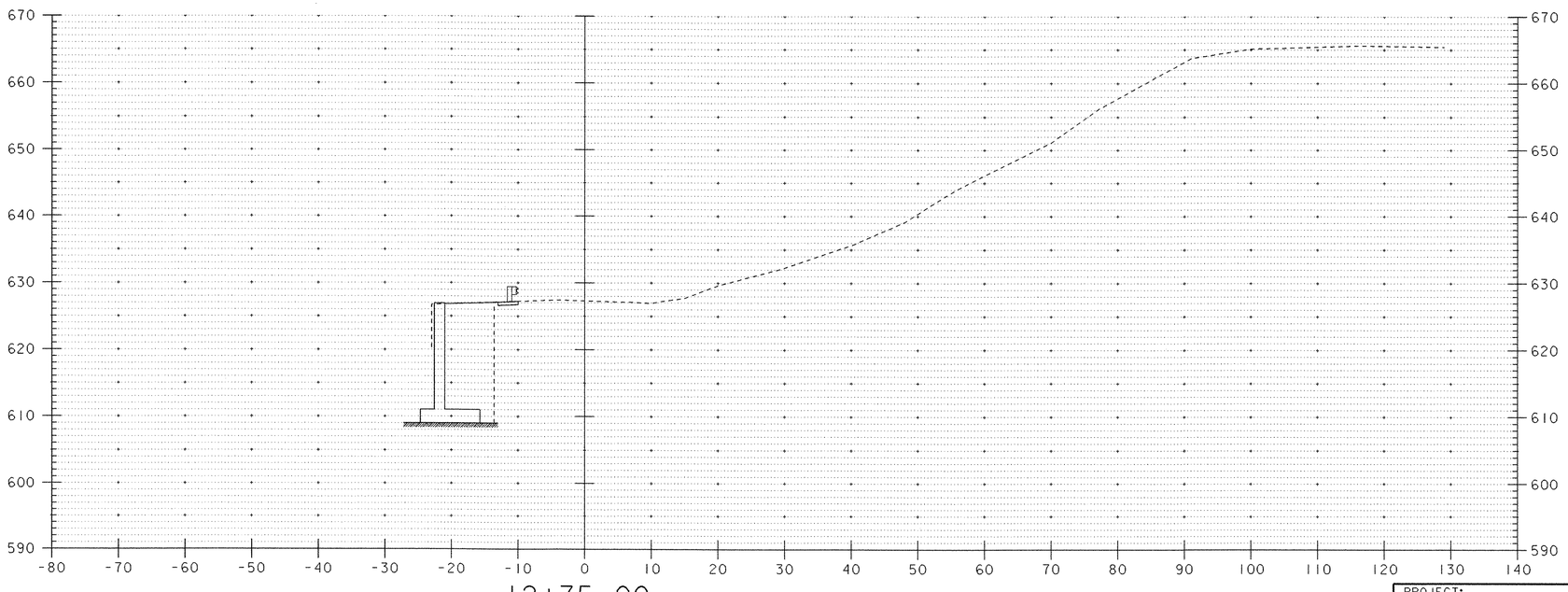

12+75.00

SCALE 1" = 10'-0
10 0 10

PROJECT: MORRISTOWN	PROJECT NO. : BRZ 1446 (15)
DESIGN FILE NAME: 88j101/structures/sj101xs1.dgn IPARM FILE NAME: sj101a4.i	PLOT DATE: 03-NOV-2005
MAIN/"A" STREET CROSS SECTIONS	
SECTION 12+75 THROUGH 13+00	SHEET: 39 OF 48

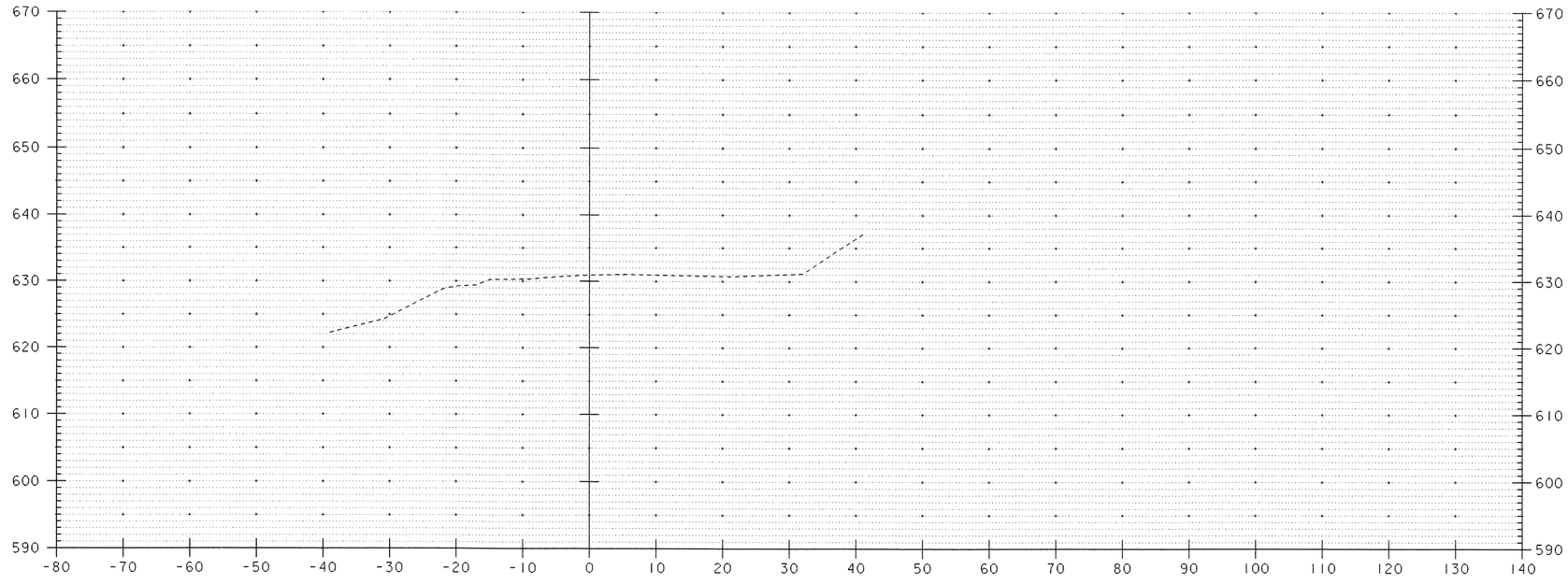

13+50.00

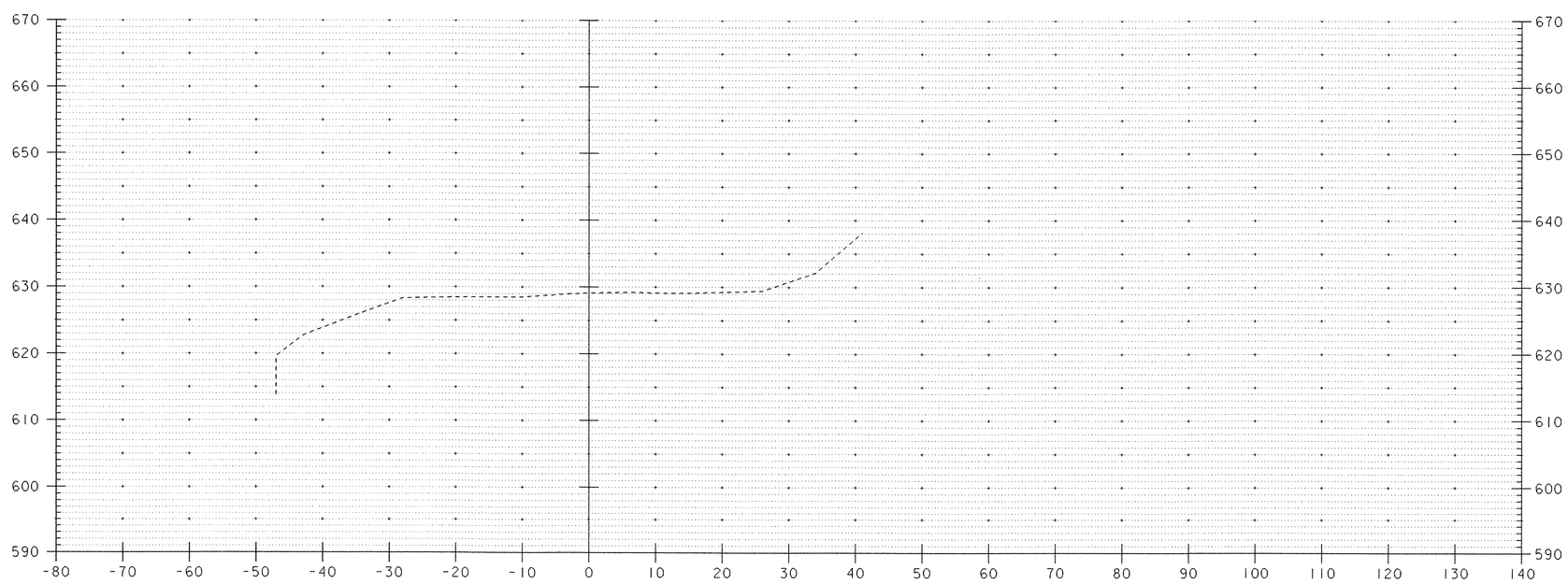

13+25.00

SCALE 1" = 10'-0
10 0 10

PROJECT: MORRISTOWN	PROJECT NO. : BRZ 1446 (15)
DESIGN FILE NAME: 88j101/structures/sj101xsl.dgn IPARM FILE NAME: sj101a5.i	PLOT DATE: 03-NOV-2005
MAIN/"A" STREET CROSS SECTIONS	
SECTION 13+25 THROUGH 13+50	SHEET: 40 OF 48

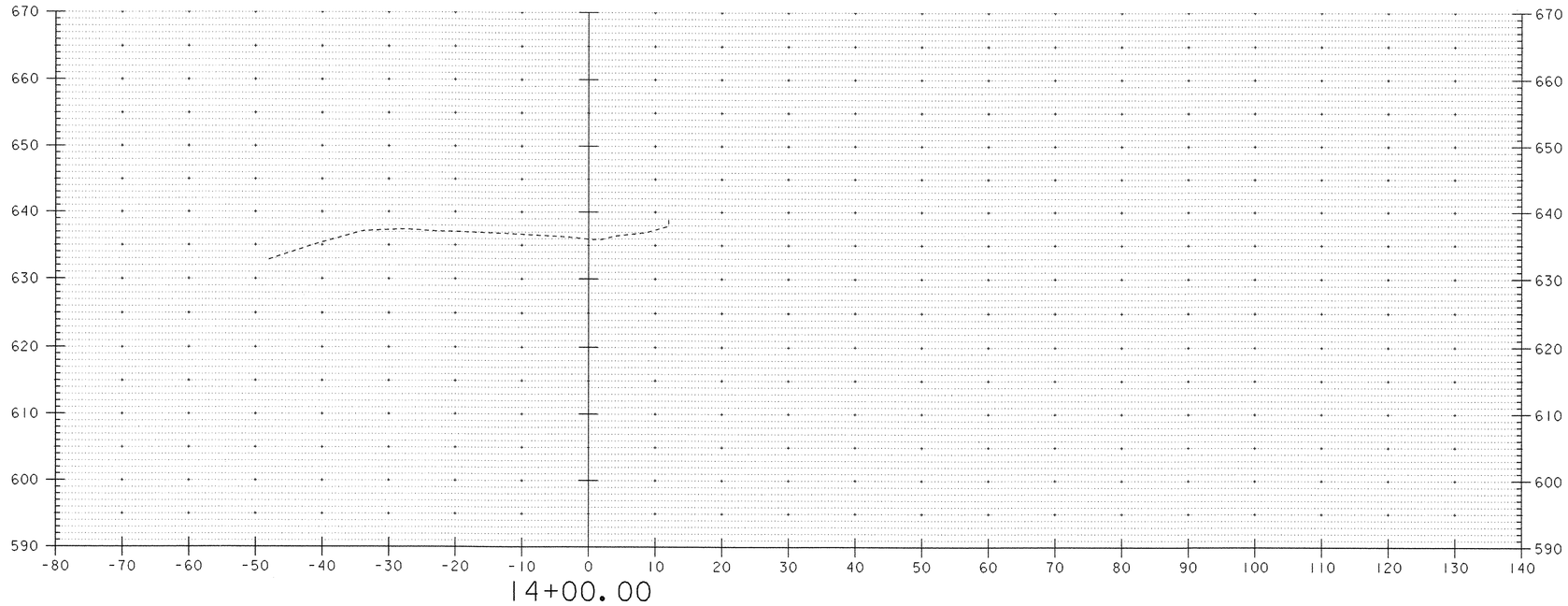

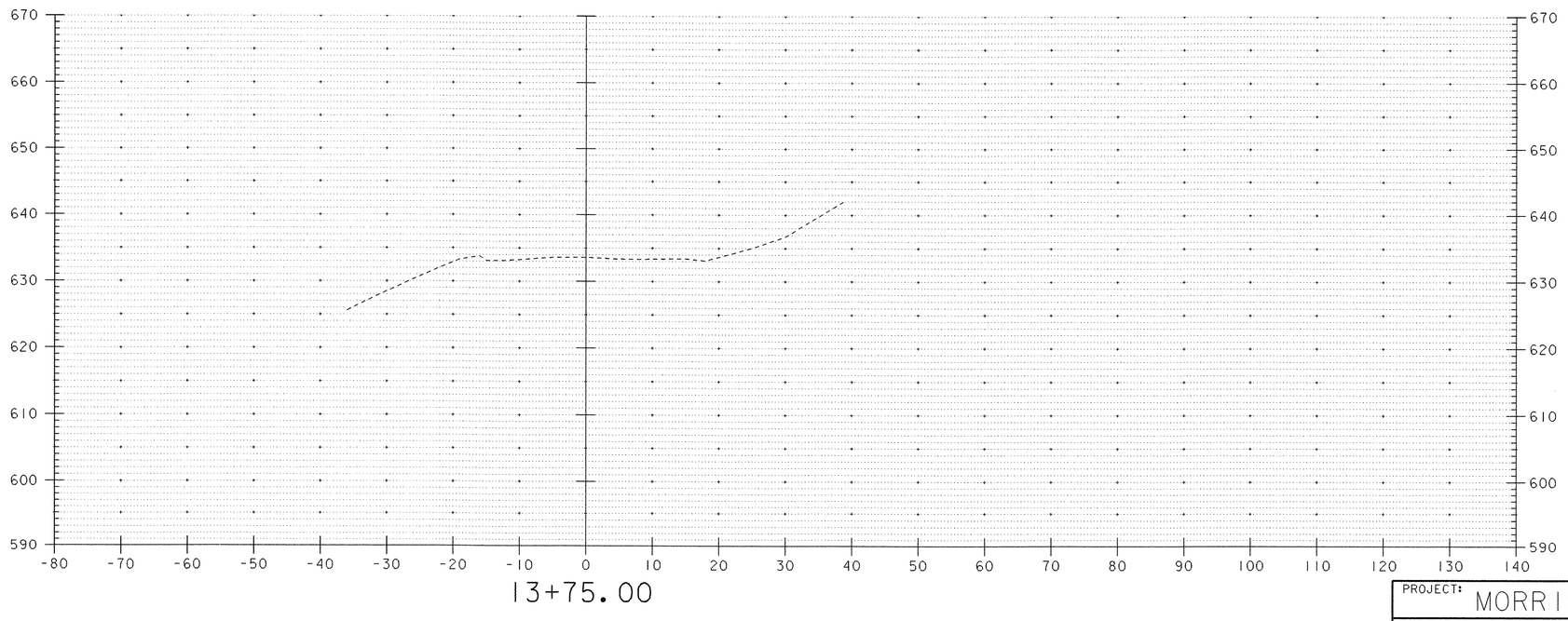

DATUM

VERTICAL NGVD 1929

HORIZONTAL N/A

SCALE 1" = 10'-0

10 0 10

PROJECT: MORRISTOWN	PROJECT NO. : BRZ 1446 (15)
DESIGN FILE NAME: 88j101/structures/sj101xs1.dgn IPARM FILE NAME: sj101a6.i	PLOT DATE: 03-NOV-2005
MAIN/"A" STREET CROSS SECTIONS	
SECTION 13+75 THROUGH 14+00	SHEET: 41 OF 48

EROSION PREVENTION AND SEDIMENT CONTROL NARRATIVE

PROJECT DESCRIPTION:

This project involves the replacement of Bridge #53, removal and replacement of the abutments, removal of a long concrete wall at abutment #1, the removal of a dry masonry wall at abutment #2, removal of a 6" curb and some minor approach work. Bridge #53 is located in the town of Morristown, on "B" street, just after the intersection of "A" and "B" street. The new bridge is going to be a single span plate girder bridge, crossing over the Lamoille River. The new bridge is on the same horizontal and vertical alignment as what is existing.

It is anticipated that this project will last one construction season.

SITE INVENTORY AND ANALYSIS:

OFF SITE DRAINAGE CHARACTERISTICS
The property surrounding the project site consists of well established vegetation and moderate slopes with steep slopes at the outer reaches of the project location. The property surrounding the project site is mostly dense growth with woods surrounding the project. Do to the nature of the surrounding terrain the project site could receive a minimal amount of runoff water on to the project site, from slopes along "A" street.

DRAINAGE, WATERWAYS, BODIES OF WATER:
The Lamoille River is the only water source in or near the project location. The river is classified as a straight stream that is a natural ledge gorge. The tributary area at the bridge crossing is 239 sq. mi. This river doesn't have a tendency of rising fast. The Morrisville dam is 150 ft. upstream of the bridge and the operation of the dam affects the hydraulics at the bridge. There is no ditch work associated with this project. However, the contractor may construct temporary ditches to divert water during construction.

TOPOGRAPHY, EXISTING ROADS, BUILDINGS, UTILITIES:
The topography of the project site is found mostly on a wooded hill. The land at the project site is mostly flat but the land going down to the river is very steep, with a high drop off. The Morrisville Water and Light Department power plant is located on "B" street, just after the bridge. Many power lines are found surrounding the bridge, running down both "A" and "B" street. See the 20 scale layout for removal of utility lines.

VEGETATION:
The vegetation in the project area is made up of grass, small tress and bushes. The impact to vegetation will be limited to that which is affected by construction of the new bridge and the removal and replacement of the new abutments. After the project is finished the slopes will be stabilized with vegetation which will be reestablished with standard seed and mulch practices.

SOILS:
The soil found near the abutments is croghan fine sand with a 2-8% slope and a "k" value of 0.17. Boothbay silt loam sits on a slope of 15-25% and has a "k" value of 0.32, and is found in areas away from the abutments. There is also a large presence of ledge around and under the bridge abutments. All substructures are founded on ledge.

Note: Generally, K-values indicate the following: 0.0 – 0.23 = low erode ability; 0.24 – 0.36 = moderate erode ability; 0.37 and higher = higher erode ability.

SENSITIVE RESOURCE AREAS:
There are no 'Threatened & Endangered Species' living on or near the project site and there are no historical, archeological or archeologically sensitive areas on or near the project site.

PROXIMTY TO NATURAL OR MAN-MADE FEATURES:
Disturbance of soils near natural or man-made waters consists of replacement of Bridge #53, removal and replacement of abutments, some minor approach work, and extending water pipe from existing to run underneath the replaced bridge. Water and Sewer lines run down the center of "A" street, the sewer line runs down the length of "A" street, while the water turns to run down "B" street. The existing power pole that cross' over the bridge is to be replaced (removal is to be done by owner) with a temporary pole. With the dam being 150ft. upstream, this has made for a gorge to form under the bridge. The existing power plant is being leased and used as an art gallery.

TEMPORARY EROSION PREVENTION & SEDIMENT CONTROL

TEMPORARY EROSION PREVENTION MEASURES TO BE UTILIZED INCLUDE:
"Project Demarcation Fencing," denoted -PDF- on the plans, will be used to delineate the limits the contractor can access with construction equipment. This measure limits the area that can be disturbed and exposed to erosion.

Seeding, mulching, and biodegradable erosion control matting or equivalent product is needed at for slopes greater then 3:1. All slopes shall be stabilized within 48 hours of reaching final grade or during intermittent phases of construction activity.

Tracking of all exposed slopes, combined with temporary mulching, will also be utilized on a regular basis. Any slopes to be several days prior to final grading shall be tracked and mulched. The forecast of rainfall events shall also trigger protection of exposed slopes.

If temporary ditches are necessary during construction, stone check dams will be utilized to reduce flow velocities and thus reduce the potential for erosion. Check dams will be placed along the ditches such that the elevation of the top of each check dam corresponds with the elevation of the toe of the preceding upslope check dam. See "Erosion Control Details" sheet. The check dams may be removed once the stone lining of the ditch is complete and the surrounding area stabilized.

TEMPORARY MEASURES TO CONTROL SEDIMENT TRANSPORT INCLUDE:
Silt fence will be installed a distance of 5' to 10' (1500-3000) from the toe of slopes to prevent sediment transport to down gradient areas. Each line of silt fence will be placed along the contour with ends turned slightly uphill to create a ponding effect should water try to run along the fencing and around the ends. The maximum slope length between separate runs of silt fence is 100' (30,000). Silt fence shall be installed prior to any upslope earthwork.

Sand bags filled with clean, small diameter stone, or an equivalent barrier, will be utilized around ledge embankments where it is impossible to use silt fence, to create a temporary ponding area for particles to settle out as water drains through the barrier. Inlet protection shall be installed as soon as there is the possibility of water flowing to the structure. The height of the barrier shall be limited such that the ponding area does not present a hazard to the traveling public. Alternative inlet control measures shall be approved by the engineer prior to implementation.

Measures such as temporary stone check dams (if deemed necessary), silt fence, and sand bags shall be checked regularly for accumulation of sediment. Sediment build-up shall be removed when the level of sediment reaches one-half the height of the control measure. Sediments shall be disposed of in an area such that they will not be subject to erosion.

Stabilized construction entrances to the project site, staging areas, as well as to waste and barrow areas shall be established. The minimum size of a stabilized construction entrance is 12'X50' (3700X15, 000). All surface water flowing to or diverted toward a construction entrance shall be piped under the stone. Pipes shall be appropriately sized for the contributing area, however, no pipe smaller then 6" (150) diameter shall be used. See typical detail on 'Erosion & Sediment Control Plan' sheet for materials and construction method to be utilized when constructing a stabilized entrance.

PERMANENT EROSION CONTROL MEASURES

There is no stone fill used as stream bank protection because both abutments are on ledge.
Vegetation will be reestablished where disturbance has occurred.

GENERAL EROSION & SEDIMENT CONTROL GUIDELINES

The Erosion Control Plans are meant as a guideline for preventing erosion and controlling sediment transportation. The work outlined in this narrative consists of applying measures throughout the life of the project to control erosion and minimize the sediment of receiving waters. The measures include stabilization and structural practices, storm water controls and other pollution prevention controls.

Coordinate the installation, use, and removal of erosion and sediment control measures with construction activities to ensure economical, effective and continuous erosion and sediment control. Employ temporary stabilization practices in incremental stages as construction proceeds. The contractor will use additional erosion control measures as necessitated by the sequence of construction and as directed be the engineer. See section 105.23 of the Vermont AOT Standard Specifications for Construction, dated 2001.

Install all erosion and sediment control measures as shown in the Erosion Control Plan or as directed by the engineer. Do not modify the type, size or location of any control or practice without approval of the engineer. Any changes shall be noted on the plans, in the weekly inspection report, and reported to the appropriate authority in a timely manner. Inspect all control measures weekly and after each rainfall event. Repair measures shall be taken as needed.

Preventing initial soil erosion is much more effective than treating eroded sediment. Therefore, stabilize all disturbed areas promptly after construction activity has temporarily or permanently ceased. Temporary vegetation shall be established if the area is to be without construction activity for a period of 14 days. Perimeter control measures shall be installed following clearing, but prior to the start of any grubbing or grading activity, install other temporary controls in incremental stages as construction proceeds.

Maintaining vegetated buffers along stream banks, wetlands or other sensitive areas is a crucial erosion and sediment control measure that should be established wherever possible.

Control only sediment-laden runoff generated by the project site using diversion berms, diversion channels, culverts and/or temporary pipes.

Do not allow construction equipment to operate on the down slope side of perimeter control measures.

SEDIMENT SETTLING BASIN SIZING CRITERIA

PUMP FLOW RATE		REQUIRED SURFACE AREA		LENGTH / WIDTH = 2:1			
Q(gpm)	Q(m^3/s)	(ft^2)	(m^2)	L (ft)	W (ft)	L (m)	W (m)
50	0.0032	595	55	35.0	17.0	10.6	5.3
100	0.0063	1200	111	49.0	24.5	15.0	7.5
150	0.0095	1776	165	59.6	29.8	18.2	9.1
200	0.0126	2368	220	68.8	34.4	21.0	10.5
250	0.0158	2970	276	77.0	38.5	23.4	11.7
300	0.0189	3560	330	84.4	42.2	25.8	12.9
350	0.0221	4155	386	91.2	45.6	27.8	13.9

PROJECT: MORRISTOWN	PROJECT NO.: BRZ 1446 (15)
DESIGN FILE NAME: 88j101/structures/sj101ecnotes.dgn	
IPARM FILE NAME: sj101ecnarr.i	PLOT DATE: 03-NOV-2005
SURVEYED BY: R. GILMAN	SURVEY DATE: 4/89
SQUAD LEADER: C.P. WILLIAMS	DRAWN BY: J. WHITE
EROSION CONTROL NARRATIVE	SHEET: 42 OF 48

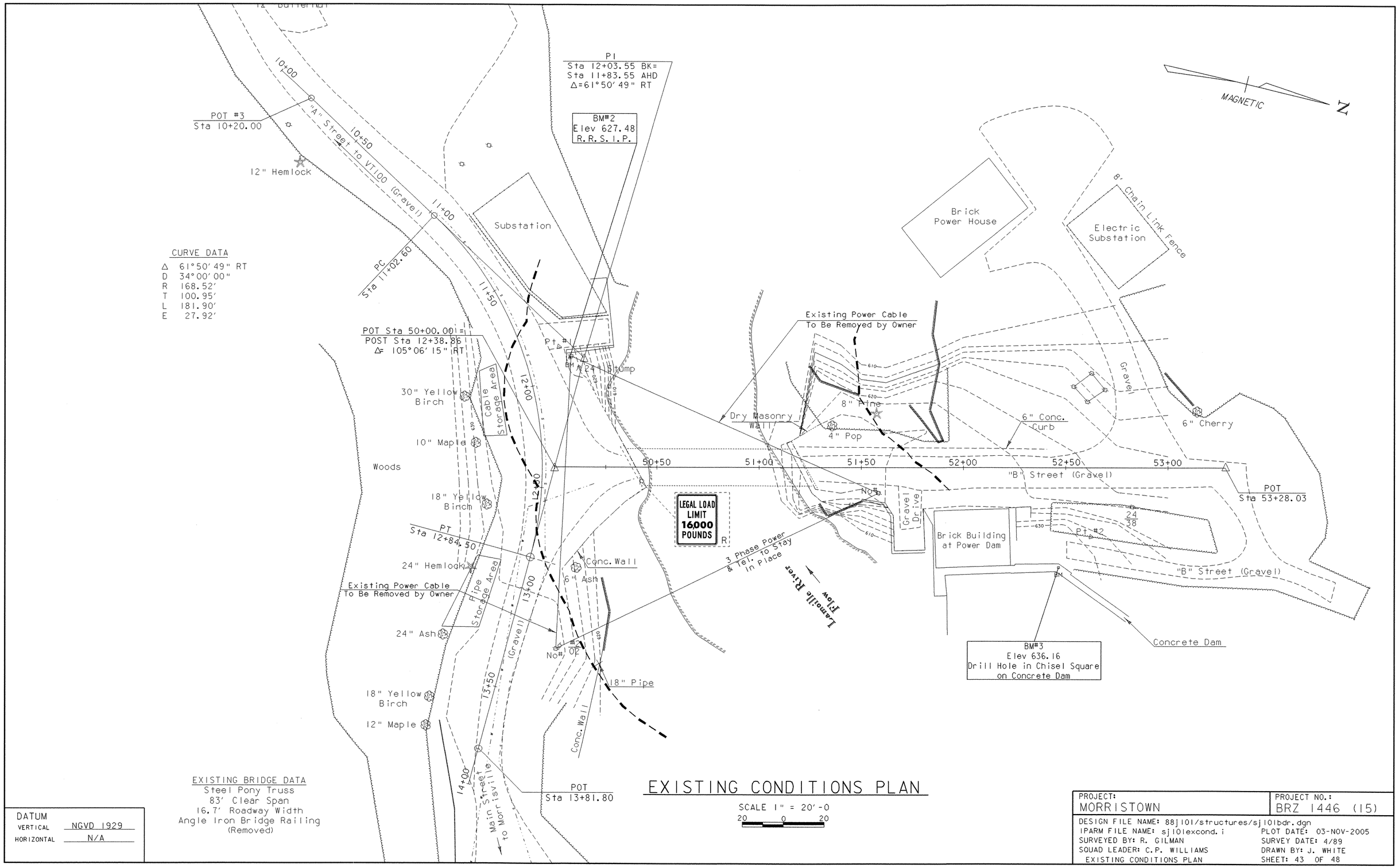

EXISTING BRIDGE DATA
Steel Pony Truss
83′ Clear Span
16.7′ Roadway Width
Angle Iron Bridge Railing
(Removed)

EXISTING CONDITIONS PLAN

SCALE 1" = 20′-0
20 0 20

DATUM	
VERTICAL	NGVD 1929
HORIZONTAL	N/A

PROJECT: MORRISTOWN	PROJECT NO.: BRZ 1446 (15)
DESIGN FILE NAME: 88j101/structures/sj101bdr.dgn	
IPARM FILE NAME: sj101excond.i	PLOT DATE: 03-NOV-2005
SURVEYED BY: R. GILMAN	SURVEY DATE: 4/89
SQUAD LEADER: C.P. WILLIAMS	DRAWN BY: J. WHITE
EXISTING CONDITIONS PLAN	SHEET: 43 OF 48

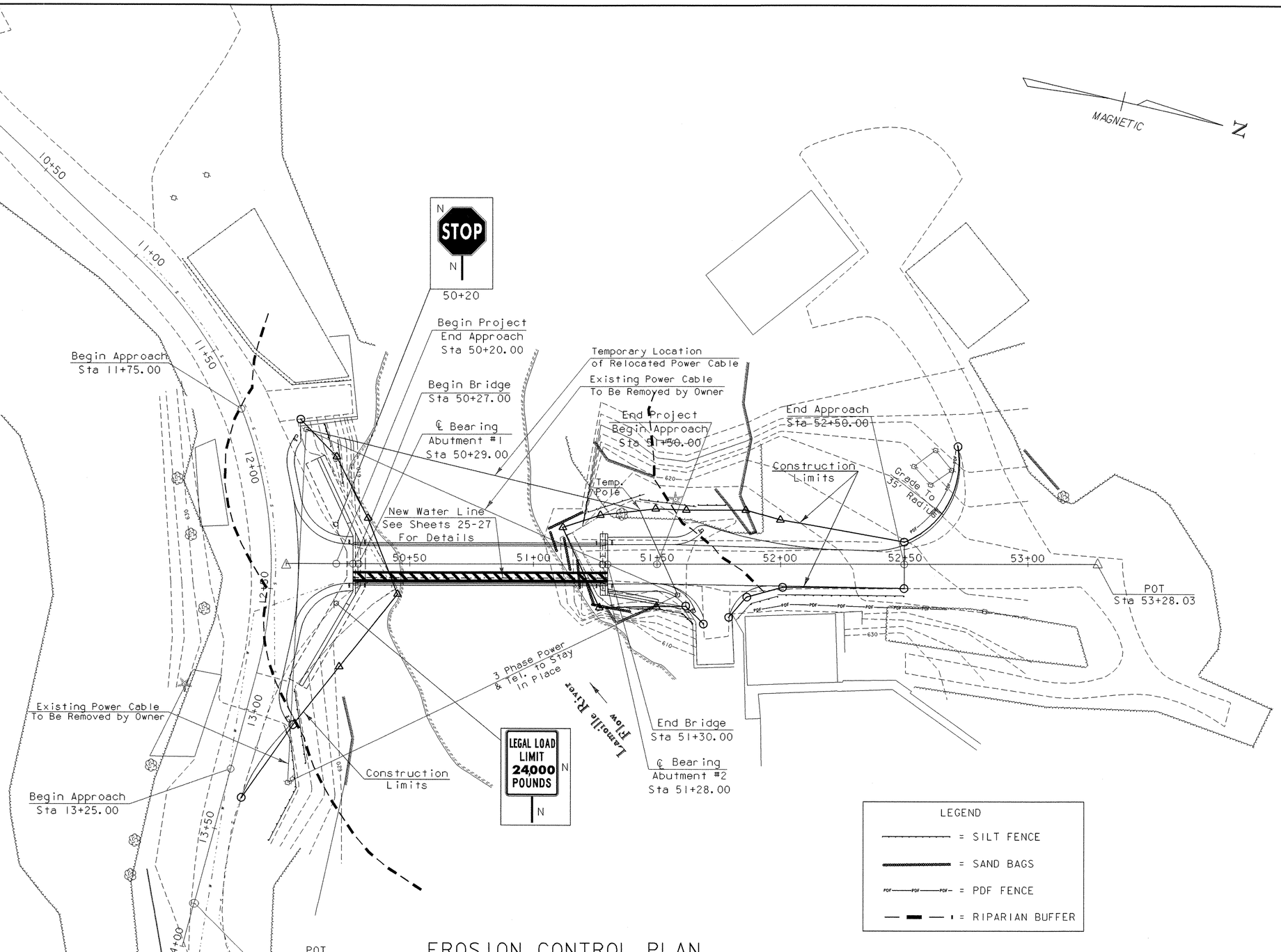

EROSION CONTROL PLAN

SCALE 1" = 20'-0

20 0 20

DATUM	
VERTICAL	NGVD 1929
HORIZONTAL	N/A

PROJECT:	PROJECT NO.:
MORRISTOWN	BRZ 1446 (15)

DESIGN FILE NAME: 88j101/structures/sj101bdr.dgn
IPARM FILE NAME: sj101eroplan.i
PLOT DATE: 03-NOV-2005
SURVEYED BY: R. GILMAN
SURVEY DATE: 4/89
SQUAD LEADER: C.P. WILLIAMS
DRAWN BY: J. WHITE
EROSION CONTROL PLAN
SHEET: 44 OF 48

EROSION PREVENTION AND SEDIMENT CONTROL NOTES:

1. THE AREA OF DISTURBANCE IS 8,509 SQ. FT. (0.195 ACRES)
2. AN UPGRADED TEMPORARY EROSION PREVENTION AND SEDIMENT CONTROL PLAN SHALL BE SUBMITTED BY THE CONTRACTOR FOR APPROVAL BY THE AGENCY OF TRANSPORTATION.
3. TIME ALL GRADING TO MINIMIZE SOIL EXPOSURE.
4. AT THE END OF EACH DAY'S GRADING OPERATIONS, SHAPE EARTHWORK TO MINIMIZE THE EROSION FROM STORM RUNOFF.
5. PREPARE TEMPORARY DRAINAGEWAYS TO HANDLE CONCENTRATED FLOW UNTIL PERMANENT DRAINAGE IS CONSTRUCTED AND STABILIZED.
6. AFTER COMPLETION OF THE SUBSTRUCTURE, THE SEDIMENT IN THE TRAPS SHALL BE REMOVED AND THE GROUND RESTORED TO ITS ORIGINAL SLOPES OR GRADED AS SHOWN ON THE CONSTRUCTION DRAWINGS.
7. SEE SHEETS 41-45 FOR EROSION PREVENTION AND SEDIMENT CONTROL DETAILS.
8. ASK FOR ASSISTANCE AND RECOMMENDATIONS AS NEEDED.

PERIMETER CONTROL NOTES:

1. IDENTIFY SENSITIVE AREAS AND AREAS PRONE TO EROSION BASED ON SITE EVALUATION.
2. CLEARLY DEMARCATE SENSITIVE AREAS TO AVOID DISTURBANCE USING BRIGHTLY COLORED SNOW FENCE, MIN. 8" WIDE FLAGGING OR SIMILAR.
3. PROTECT ALL SENSITIVE AREAS AND WATER FEATURES FROM SEDIMENT.
4. DIVERT OR OTHERWISE KEEP ALL CONCENTRATED OFF-SITE "RUN-ON" FROM AREAS TO BE DISTURBED.
5. PERIMETER CONTROLS (SILT FENCE, TURBIDITY CURTAIN, ETC.) TO BE INSTALLED PRIOR TO SOIL DISTURBANCE AND MAINTAINED UNTIL SITE IS PERMANENTLY STABILIZED TO THE SATISFACTION OF THE ENGINEER AND ON-SITE COORDINATOR.
6. SODDING SHALL BE APPLIED IMMEDIATELY TO ALL LAWNS DISTURBED BEYOND THE WORK AREA DELINEATED ON THESE PLANS.
7. PREVENT SEDIMENT FROM LEAVING THE SITE BY MAINTAINING AND MODIFYING PERIMETER CONTROLS AS NEEDED.

GENERAL NOTES:

1. PRIOR TO CONSTRUCTION, THE CONTRACTOR SHALL PROVIDE THE FOLLOWING ADDITIONAL INFORMATION FOR APPROVAL AND INCLUSION IN THE COMPLETE EROSION PREVENTION AND SEDIMENT CONTROL PLANS:
   - LOCATION OF WASTE, BORROW AND STAGING AREAS, MATERIAL STOCKPILES, REFUELING AND MAINTENANCE AREAS AND CONCRETE TRUCK WASHOUT LOCATION (ATTACH MAP IF NECESSARY). A DISCUSSION AND ADDITIONAL DETAILS NEEDED FOR PROTECTION AND STABILIZATION OF THESE AREAS SHALL BE INCLUDED AS WELL.
   - MODIFICATIONS REQUIRED TO THESE EROSION PREVENTION AND SEDIMENT CONTROL PLANS.
   - GRADING PLAN / CONSTRUCTION SEQUENCE (INCLUDING PROPOSED DATES ASSOCIATED WITH JOB MILESTONES AS INDICATED ON THE SEQUENCE CONSISTENT WITH PROJECT CRITICAL PATH METHOD SCHEDULE.)
   - REVISED NARRATIVE MATCHING THE GRADING PLAN AND CONSTRUCTION SEQUENCE (RE: TEMPORARY SEEDING AND MULCHING / STABILIZATION).
   - NAME, ADDRESS, PHONE NUMBER AND BASIC QUALIFICATIONS OF "ON-SITE COORDINATOR".
2. WORK SHALL BE GENERALLY CONSISTENT WITH GUIDANCE PROVIDED IN THE LATEST REVISION OF THE VERMONT HANDBOOK FOR SOIL EROSION AND SEDIMENT CONTROL ON CONSTRUCTION SITES AND THE ASSOCIATED GENERAL CONTRACTORS OF VERMONT FIELD HANDBOOK.

SEEDING FORMULA
RURAL AREAS

% WT.	kg/ha	NAME	PUR %	GERM %
37.5	26.0	CREEPING RED FESCUE	98	85
37.5	26.0	TALL FESCUE	95	90
5.0	4.0	RED TOP	95	90
15.0	10.0	BIRDSFOOT TREFOIL	98	85
5.0	4.0	ANNUAL RYE GRASS	95	85
100.0	70.0			

GENERAL NOTES

SEED MIXTURE: SHALL NOT HAVE A WEED CONTENT EXCEEDING 0.40% BY WEIGHT AND SHALL BE FREE OF ALL NOXIOUS SEED.

SEED: TO BE APPLIED PER SEEDING FORMULAS OR AS DIRECTED BY THE ENGINEER.

FERTILIZER: FORMULA 10-20-10, TO BE USED WITH SEED, APPLIED AT THE RATE OF 560 kg/ha. (HYDRO SEEDERS MAY USE 19-19-19 FORMULA).

AGRICULTURAL LIMESTONE: TO BE APPLIED AT THE RATE OF 4500 kg/ha, OR AS DIRECTED BY THE ENGINEER.

HAY MULCH: TO BE PLACED ON EARTH SLOPES AT THE RATE OF 4500 kg/ha, OR AS DIRECTED BY THE ENGINEER.

TOPSOIL: TO BE USED WITH SEED AS INDICATED ON THE PLANS, OR AS DIRECTED BY THE ENGINEER.

PROJECT: MORRISTOWN	PROJECT NO.: BRZ 1446 (15)
DESIGN FILE NAME: 88j101/structures/sj101ecnotes.dgn	
IPARM FILE NAME: sj101ecnotes.i	PLOT DATE: 03-NOV-2005
SURVEYED BY: R. MOREAU	SURVEY DATE: 3/93
SQUAD LEADER: C.P. WILLIAMS	DRAWN BY: J. WHITE
EROSION CONTROL NOTES	SHEET: 45 OF 48

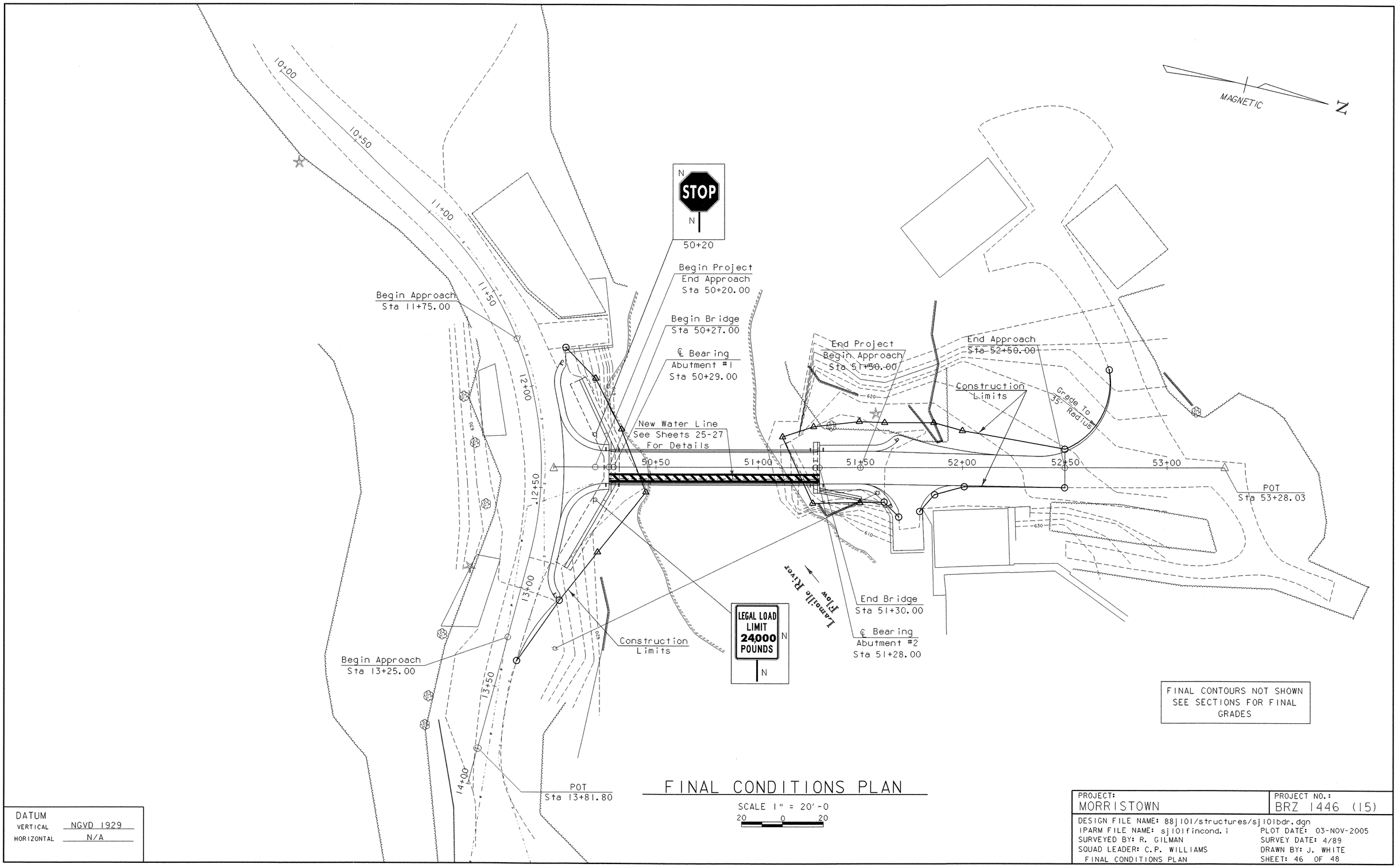

FINAL CONDITIONS PLAN

SCALE 1" = 20'-0

20 0 20

DATUM
VERTICAL NGVD 1929
HORIZONTAL N/A

PROJECT: MORRISTOWN	PROJECT NO.: BRZ 1446 (15)
DESIGN FILE NAME: 88j101/structures/sj101bdr.dgn	
IPARM FILE NAME: sj101fincond.i	PLOT DATE: 03-NOV-2005
SURVEYED BY: R. GILMAN	SURVEY DATE: 4/89
SQUAD LEADER: C.P. WILLIAMS	DRAWN BY: J. WHITE
FINAL CONDITIONS PLAN	SHEET: 46 OF 48

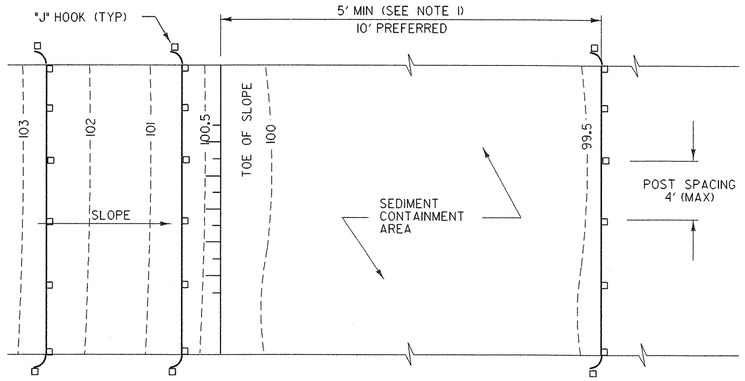

PLAN

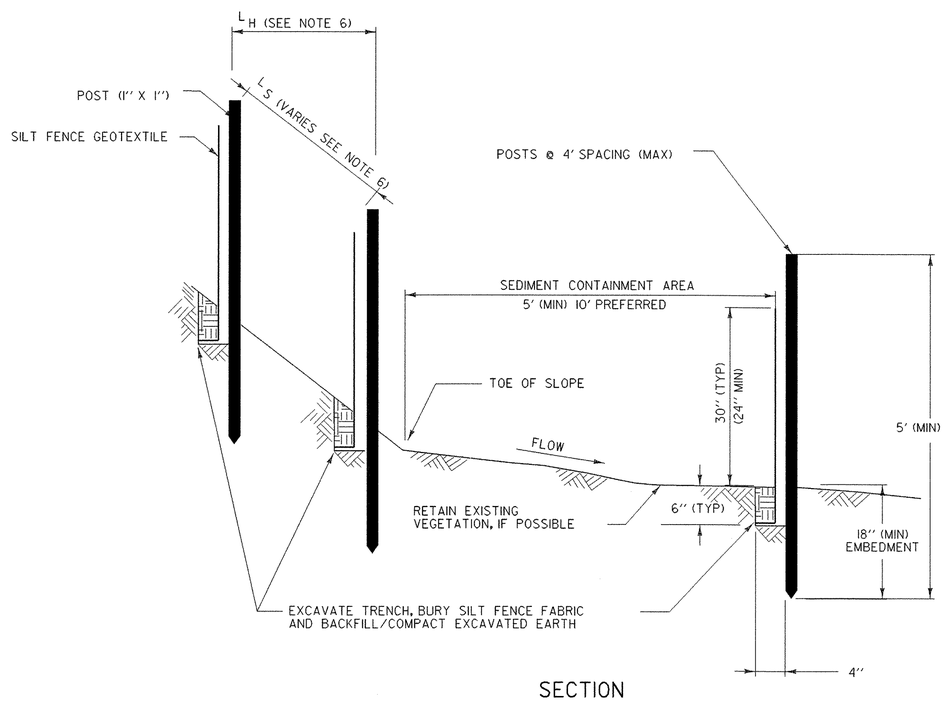

SECTION
SILT FENCE - TEMPORARY

SILT FENCE

APPLICATION NOTES:

A. THE PRIMARY PURPOSE OF SILT FENCE IS TO REDUCE RUNOFF VELOCITY AND TRAP SEDIMENT. VELOCITY IS REDUCED, WATER IS IMPOUNDED BEHIND THE MEASURE, AND SEDIMENT FALLS OUT OF SUSPENSION.

B. SILT FENCE SHALL BE INSTALLED ON A LINE OF EQUAL ELEVATION (CONTOUR). IT MAY BE INSTALLED AT INTERMEDIATE POINTS UP SLOPES AS WELL AS AT THE BOTTOM, AS SHOWN IN THE DETAIL.

C. SILT FENCE SHALL NOT BE USED ACROSS CONCENTRATED FLOW.

D. WHERE LEDGE IS EXPOSED SAND BAGS MAY BE USED TO PREVENT SEDIMENT RUNOFF. PAYMENT FOR SAND BAGS SHALL BE MADE UNDER THE ITEM 620.70 SNOW FENCE (MOD-PDF).

GENERAL NOTES:

1. SILT FENCE SHALL GENERALLY BE PLACED A MINIMUM OF 5 FEET BEYOND TOE OF SLOPE, 10 FEET PREFERRED, TO PROVIDE ADEQUATE AREA FOR SEDIMENT STORAGE AND FACILITATE MAINTENANCE OF SEDIMENT CONTAINMENT AREA.
2. ALL ENDS SHALL BE "J" HOOKED TO TRAP SEDIMENT.
3. IN AREAS WITH TWO SLOPES, SILT FENCE SHALL BE USED TO ERECT A DAM AND TRAP SEDIMENT AT THE BASE OF THE STEEPER SLOPE.
4. THE BOTTOM EDGE OF SILT FENCE SHALL BE BURIED A MINIMUM OF 6 INCHES BELOW GROUND, AND KEYED IN 4 INCHES. THE FENCE SHALL BE INSTALLED WITH THE POSTS ON THE DOWNSTREAM SIDE OF THE FABRIC.
5. MAXIMUM DRAINAGE AREA TRIBUTARY TO 100 FEET OF SILT FENCE SHALL BE 0.25 ACRES.
6. THE FOLLOWING ARE MAXIMUM SLOPE LENGTHS FOR THESE MEASURES:

CONSTRUCTED SLOPE	SLOPE LENGTH (LS) FT	HORIZONTAL LENGTH (LH) FT
3 : 1	80	75
4 : 1	130	125
5 : 1	200	200
> 5 : 1	250	250

7. MEASURES SHALL BE INSPECTED EVERY SEVEN (7) CALENDAR DAYS AND WITHIN 24 HOURS OF A STORM EVENT GREAT ENOUGH TO CAUSE WATER TO LEAVE THE CONSTRUCTION SITE.
8. MEASURES SHALL BE CLEANED AND REPAIRED AS NEEDED. SEDIMENT SHALL BE REMOVED WHEN ACCUMULATION REACHES ONE-HALF OF THE MEASURE HEIGHT. SEDIMENT SHALL BE DISPOSED OF AS UNSUITABLE MATERIAL.
9. SILT FENCE SHALL BE REMOVED WHEN THE AREA HAS BEEN STABILIZED. AT TIME OF REMOVAL OF THE SILT FENCE, THE DISTURBED AREA SHALL BE REPAIRED AND STABILIZED.
10. PAYMENT FOR INSTALLATION AND REMOVAL OF SILT FENCE SHALL BE MADE UNDER THE GEOTEXTILE FOR SILT FENCE ITEM.
11. PAYMENT FOR MONITORING SILT FENCE SHALL BE MADE UNDER THE MONITORING EROSION & SEDIMENT CONTROL PLAN ITEM.
12. PAYMENT FOR MAINTAINING SILT FENCE SHALL BE MADE UNDER THE FIELD MAINTENANCE OF EROSION & SEDIMENT CONTROL PLAN ITEM, UNLESS MAINTENANCE IS REQUIRED DUE TO POOR INSTALLATION PRACTICES.

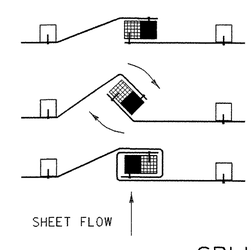

1. PLACE THE END POST OF ONE FENCE INSIDE THE END POST OF THE OTHER FENCE.
2. ROTATE BOTH POSTS AT LEAST 180 DEGREES IN A CLOCKWISE DIRECTION TO CREATE A TIGHT SEAL WITH THE FABRIC MATERIAL
3. DRIVE BOTH POSTS 18 INCHES INTO THE GROUND AND BURY THE FLAP IN THE TRENCH.

SPLICING DETAIL

EROSION PREVENTION & SEDIMENT CONTROL DETAILS SILT FENCE

PROJECT: MORRISTOWN	PROJECT NO.: BRZ 1446 (15)
DESIGN FILE NAME: 88j101/structures/sj101ecs.dgn	
IPARM FILE NAME: sj101epsc-1m.i	PLOT DATE: 03-NOV-2005
SURVEYED BY: R. GILMAN	SURVEY DATE: 4/89
SQUAD LEADER: C.P. WILLIAMS	DRAWN BY: J. WHITE
SILT FENCE DETAILS	SHEET: 47 OF 48

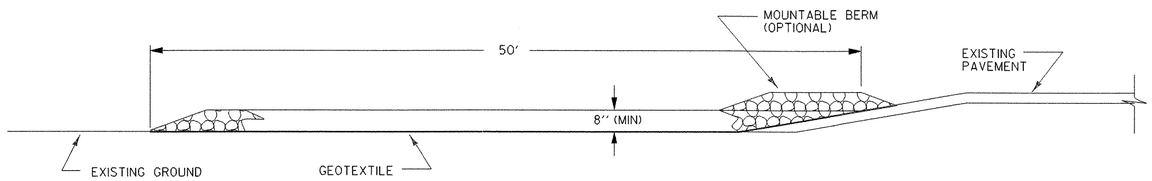

TYPICAL CONSTRUCTION ENTRANCE PROFILE
(CUT AND DITCH SECTIONS)

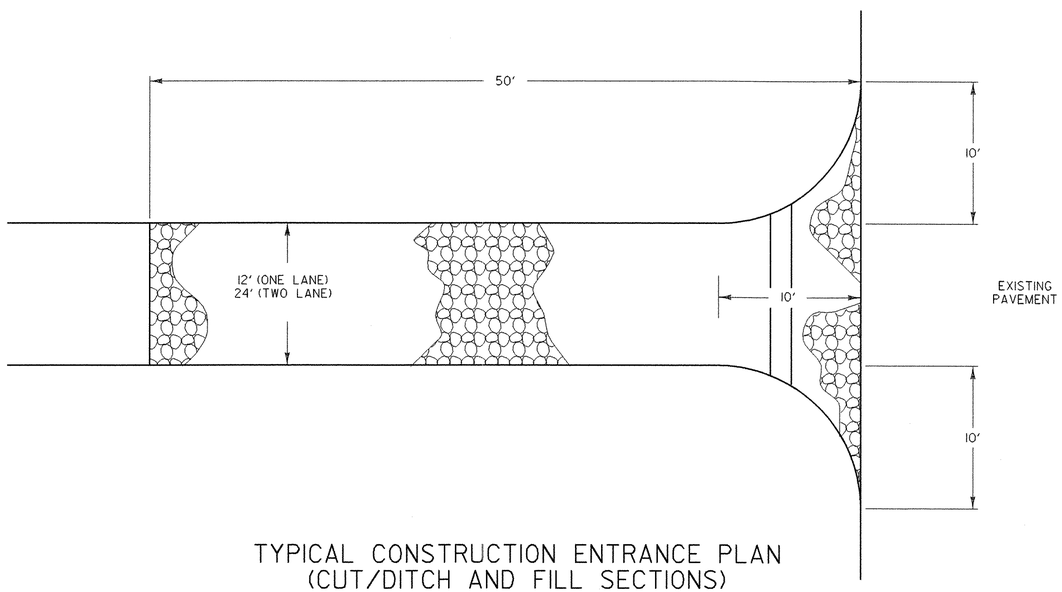

TYPICAL CONSTRUCTION ENTRANCE PLAN
(CUT/DITCH AND FILL SECTIONS)

STABILIZED CONSTRUCTION ENTRANCE

APPLICATION NOTES:

A. THE PURPOSE OF A STABILIZED CONSTRUCTION ENTRANCE IS TO REDUCE OR ELIMINATE THE TRACKING OF SEDIMENT ONTO PUBLIC RIGHTS OF WAY OR STREETS.

B. DUE TO THE LOCATION OF THE PROJECT, A STABILIZED CONSTRUCTION ENTRANCE MAY OR MAY NOT BE NECECESSARY. THE RESIDENT ENGINEER WILL DETERMINE IF A CONSTRUCTION ENTRANCE IS REQUIRED.

GENERAL NOTES:

1. STONE SIZE - USE CLEAN STONE WITH GRADATION BETWEEN 2 INCHES AND 4 INCHES .
2. LENGTH - 50 FEET (MIN)
3. THICKNESS - 18 INCHES (MIN)
4. WIDTH - 12 FEET (MIN)
5. GEOTEXTILE UNDER STONE WILL BE PLACED OVER THE ENTIRE AREA PRIOR TO PLACING OF STONE.
6. SURFACE WATER - ALL SURFACE WATER FLOWING OR DIVERTED TOWARD CONSTRUCTION ENTRANCES SHALL BE PIPED ACROSS THE ENTRANCE AS DIRECTED BY THE ENGINEER. IF PIPING IS IMPRACTICAL, A MOUNTABLE BERM WITH 5:1 SLOPES WILL BE PERMITTED.
7. PROPOSED DRAINAGE PIPES SHALL BE SIZED WITH SUFFICIENT CAPACITY TO CARRY DITCH FLOWS. ALTERNATIVE WAYS OF TRANSPORTING DITCH DRAINAGE ACROSS CONSTRUCTION ENTRANCES MAY BE PROPOSED BY THE CONTRACTOR FOR APPROVAL BY THE ENGINEER.
8. WHEN WASHING OF VEHICLE IS NECESSARY, IT SHALL BE DONE ON AN AREA STABILIZED WITH STONE WHICH DRAINS INTO AN APPROVED SEDIMENT TRAPPING DEVICE.
9. MEASURES SHALL BE INSPECTED EVERY SEVEN (7) CALENDAR DAYS AND WITHIN 24 HOURS OF A STORM EVENT GREAT ENOUGH TO CAUSE WATER TO LEAVE THE CONSTRUCTION SITE.
10. MAINTENANCE- THE ENTRANCE SHALL BE MAINTAINED IN A CONDITION WHICH WILL PREVENT TRACKING OR FLOWING OF SEDIMENT ONTO PUBLIC RIGHTS-OF-WAY. ALL SEDIMENT SPILLED, DROPPED, WASHED, OR TRACKED ONTO PUBLIC RIGHTS-OF-WAY MUST BE REMOVED IMMEDIATELY.
11. AT THE TIME OF REMOVAL OF THE STABILIZED CONSTRUCTION ENTRANCE THE DISTURBED AREA SHALL BE REPAIRED AND STABILIZED.
12. PAYMENT OF THE STABILIZED CONSTRUCTION ENTRANCE SHALL BE MADE UNDER APPLICABLE ITEMS INCLUDED IN THE CONTRACT PLANS OR UNDER THE FIELD MAINTENANCE OF EROSION & SEDIMENT CONTROL PLAN ITEM.
13. PAYMENT FOR MONITORING STABILIZED CONSTRUCTION ENTRANCES SHALL BE MADE UNDER THE MONITORING EROSION & SEDIMENT CONTROL PLAN ITEM.
14. PAYMENT FOR MAINTAINING THE CONSTRUCTION ENTRANCE SHALL BE MADE UNDER THE FIELD MAINTENANCE OF EROSION & SEDIMENT CONTROL PLAN ITEM, UNLESS MAINTENANCE IS REQUIRED DUE TO POOR INSTALLATION PRACTICES.

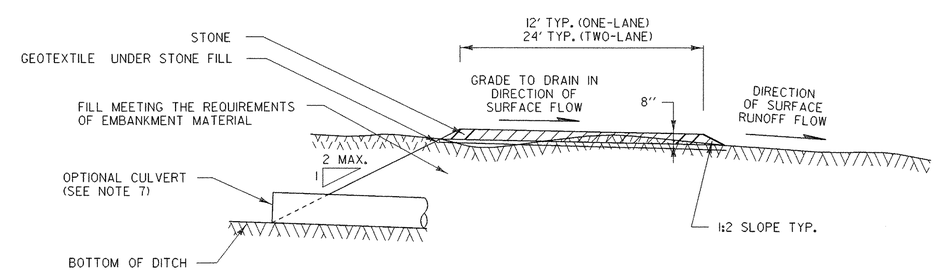

TYPICAL CONSTRUCTION ENTRANCE SECTION

EROSION PREVENTION & SEDIMENT CONTROL DETAILS CONSTRUCTION ENTRANCE

PROJECT: MORRISTOWN	PROJECT NO.: BRZ 1446 (15)
DESIGN FILE NAME: 88j101/structures/sj101ec.dgn	
IPARM FILE NAME: sj101epsc-4.i	PLOT DATE: 03-NOV-2005
SURVEYED BY: R. GILMAN	SURVEY DATE: 4/89
SQUAD LEADER: C.P. WILLIAMS	DRAWN BY: J. WHITE
CONSTRUCTION ENTRANCE DETAILS	SHEET: 48 OF 48

AUCIELLO IRON WORKS, INC.
560 Main Street
Hudson, MA 01749

WELDING PROCEDURE SPECIFICATION (WPS)

Welding Procedure Specification No. W.P.S. #14 Date Thurs. 4-4-91 Approved

Revisions Date Approved

Supporting PQR Numbers P.Q.R.#14

Joints
Fillet
~~Groove~~ Design Sketch

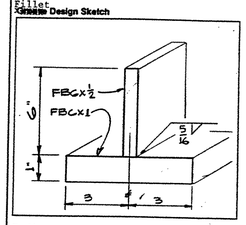

Backing
Type N/A
Permanent
Removed
Other

Base Metals
Group No. M23 Thickness to
Alloy and Temper 6061-T6

Filler Metal
F-No. F22 AWS No. ER5356
Size of electrode .045 ± 1/64 Class
Type of electrode Aluminum
Other

Shielding Gas
Shielding gas(es) Helium - Argon
Percent composition 75% - 25%
Flow rate 45 C.F.H. (+50%, - 20%)
Other

Position
Position of ~~groove~~ Fillet 2 F (Horiz.)
Welding progression Single Pass = 5/16
Other

Preheat
Preheat temperature 150° F - 250° F (Max)
Interpass temperature 200° F - 300° F (Max)

Form E(a)

049 SS wld

AUCIELLO IRON WORKS, INC.
560 Main Street
Hudson, MA 01749

Appendix E/167

WELDING PROCEDURE SPECIFICATION (WPS)

± 25%

Cleaning

Initial cleaning oxide S.S. Wire Brush

Initial cleaning oil and dirt Acetone

Interpass cleaning S.S. Wire Brush

Post Weld Heat Treatment

Original temper N/A

Final temper

Temperature

Time

Quench

Process(es)

Process G.M.A.W (Mig) Type* Manual (R.P.)

Process Type*

Electrode (GTAW)

Technique

Stringer or weave bead Stringer

Orifice or gas cup size 5/8"

Oscillation None

Contact tube to work distance 1/2"

Single pass or multipass Single 5/16" per side

Tungsten extension N/A

Method of back gouging

Other

*Manual, automatic, polarity, pulse, etc.

Pass no.	Welding process	± 15% Amps	± 15% Volts	Travel speed	
1	G.M.A.W	280	33	22.5	I.P.M.

VTRANS
RECEIVED
CK'D BY _____ OK'D BY JWC
MAR 30 2006
RESUBMIT _____ APPROVED ✓
BY _____ DATE 4/10/06

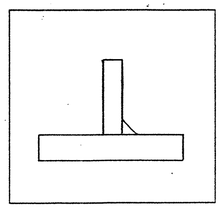

Sketch of welding sequence

Form E(a) (continued)

050sw1d

ALUM.

WELDING PROCEDURE SPECIFICATION (WPS)

Welding Procedure
Specification No. # 53 Date 09-3-2009 Approved PHILIPPE-QC
Revisions _____ Date _____ Approved _____

Supporting PQR Numbers # 40

Joints

Groove Design Sketch

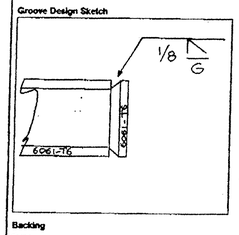

Filler Metal
F-No. F22 AWS No. ER 5356 Class
Size of electrode 3/64
Type of electrode ALUMINUM
Other

Shielding Gas
Shielding gas(es) HELIUM - ARGON
Percent composition 75% - 25%
Flow rate 50 CFH (+50% - 20%)
Other

Backing
Type
Permanent
Removed
Other

Position
Position of groove 6G
Welding progression FOREHAND
Other

Base Metals
Group No. 23 Thickness 1/8" to 1/4"
Alloy and Temper 6061-T6

Preheat
Preheat temperature 50°F MIN
Interpass temperature N/A

Form E(a)

AUCIELLO IRON WORKS, INC.
560 MAIN ST.
HUDSON, MA 01749

05/ ~~04~~ issued

#53

Appendix E/16

WELDING PROCEDURE SPECIFICATION (WPS)

Cleaning

Initial cleaning oxide S.S WIRE BRUSH

Initial cleaning oil and dirt ACETONE

Interpass cleaning

Post Weld Heat Treatment

Original temper

Final temper

Temperature

Time

Quench

Process(es)

Process GMAW Type* SEMI-AUTO

Process Type*

Electrode (GTAW)

Technique

Stringer or weave bead STRINGER

Orifice or gas cup size 5/8"

Oscillation

Contact tube to work distance 1/2"

Single pass or multipass SINGLE per side

Tungsten extension

Method of back gouging

Other

Pass no.	Welding process	Amps	Volts	Travel speed
1	GMAW	175	26	30
		±15%	±15%	±20%

VTRANS
RECEIVED
OK'D BY OK'D BY JWC
MAR 3 0 2006
RESUBMIT APPROVED ✓
BY DATE 4/12/06

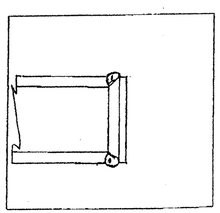

Sketch of welding sequence

*Manual, automatic, polarity, pulse, etc.

Form E(a) (continued)

AUCIELLO IRON WORKS, INC.
560 MAIN ST.
HUDSON, MA 01749

052 ~~[illegible]~~ SSWld

GENERAL NOTES

CONSTRUCTION SPECIFICATIONS

1). ALL MATERIAL AND WORKMANSHIP TO BE IN ACCORDANCE WITH THE STATE OF VERMONT AGENCY OF TRANSPORTATION STANDARD SPECIFICATIONS FOR CONSTRUCTION DATED 2001 WITH LATEST REVISIONS AND THE SPECIAL PROVISIONS.

2). AMERICAN ASSOCIATION OF STATE HIGHWAY AND TRANSPORTATION OFFICIALS (A.A.S.H.T.O) STANDARD SPECIFICATIONS FOR HIGHWAY BRIDGES, 1996 EDITION WITH LATEST REVISIONS.

MATERIAL SPECIFICATIONS

1). ALL STRUCTURAL STEEL TO BE AASHTO M270 GRADE 50W (ASTM A709-50W) (UNPAINTED).

2). MATERIAL NOTED "CVN" OR "H2-3" ON DETAIL DRAWINGS SHALL BE CHARPY V-NOTCH TESTED IN ACCORDANCE WITH THE REQUIREMENTS OF VERMONT STANDARD SPECIFICATIONS SECTION 714.01.

3). HIGH STRENGTH BOLTS: AASHTO M164 TYPE 3 (ASTM A325).

FABRICATION

1). ALL HOLES SHALL BE PUNCHED OR DRILLED FULL SIZE (UN).

2). STUDS ARE FURNISHED AND FIELD APPLIED BY OTHERS.

WELDING

1). THE CONFIGURATION OF THE WELD JOINTS AND ALL WELDING PROCEEDURES SHALL BE IN ACCORDANCE WITH AASHTO/AWS D1.5-02 BRIDGE WELDING CODE AND IN ADDITION TO SPECIFICATIONS SHOWN ABOVE. ALL WELDING WILL BE DETAILED TO PRE-QUALIFIED JOINTS, UNLESS PROHIBITED BY THE DESIGNER.

2). WELDING OF MAIN LOAD CARRYING MEMBERS AND ATTACHMENTS SHALL BE PERFORMED USING THE AUTOMATIC SUBMERGED ARC & SHIELDED METAL ARC PROCESSES. ALL WELDS ARE CONTINUOUS U.N.

3). NON DESTRUCTIVE TESTING OF WELDS SHALL BE IN ACCORDANCE WITH THE REFERENCED SPECIFICATION.

CLEANING

1). ALL STEEL SHALL BE BLAST CLEANED AS PER SSPC SP-10 PER SPEC. 506.14(a)

FIELD CONNECTIONS

1). ALL FIELD CONNECTIONS SHALL BE MADE WITH 7/8" OR 5/8" DIAMETER HIGH STRENGTH A-325 BOLTS, INSTALLED PER SECTION 506.19(c). SEE DWG E1 FOR FIELD BOLT SIZES.

2). BOLTS SHALL HAVE HEAVY HEX NUT, HEX HEAD, AND AT LEAST ONE FLAT WASHER EACH. WASHER TO BE PLACED UNDER TURNED ELEMENT. TWO WASHERS REQUIRED AT OVERSIZED OR SLOTTED HOLE CONNECTIONS.

3). PIECE MARKS WILL BE LOCATED AS SHOWN ON ERECTION DRAWINGS.

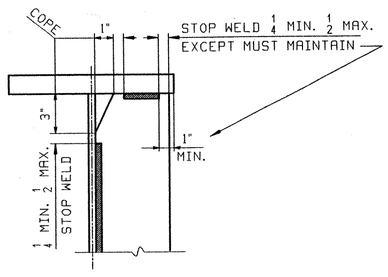

DETAIL "WS1"

(OFFICE COPY)

RECEIVED
CK'D BY EL CK'D BY KMH
MAY 01 2006
RESUBMIT ____ APPROVED ✓
BY CPW DATE 5/2/06

NOTE TO ENGINEER:
THESE NOTES ARE NOT INTENDED TO BE ALL INCLUSIVE AND COMPLIANCE WITH RELEVANT SPECIFICATIONS REMAIN UNCHANGED.

REV.	REMARKS	DATE	DWN	CHK	APP	Q.A.	NO.	DIA.	LGT	TYPE	WASHER
	OUT FOR APPROVAL	3/4/06									
	OUT FOR APPROVAL	4/27/06									
	ISSUED TO SHOP										
	FIELD & OFFICE										

MATERIAL: | ELECTRODES: | HOLES: | SHOP BOLTS:

SURFACE PREP. & PAINT:

DESCRIPTION: GENERAL NOTES

JOB: "B" STREET OVER LAMOILLE RIVER
BRIDGE NO 53
MORRISTOWN, VT. (LAMOILLE COUNTY)

TENSOR 2624

PROJ NO. BRZ 1446(15)

CUSTOMER: A.L. ST. ONGE CONTRACTORS, INC.

DRAWN BY	WL
DATE	01/28
CHKD BY	
DO	02/04
APPROV BY	
SUPERVISOR	W. J. GATTI
Q.A.	

CASCO BAY STEEL STRUCTURES, INC.
75 SPRING HILL ROAD SACO, MAINE 04072
PHONE (207) 282-7360 FAX. (207) 282-1179

JOB NO.	DRG. NO.
292	GN1
05355	REV. △

WL Mon Feb 6 11:59:46 EST 2006 /users/jobs/2624/GN1.dwg

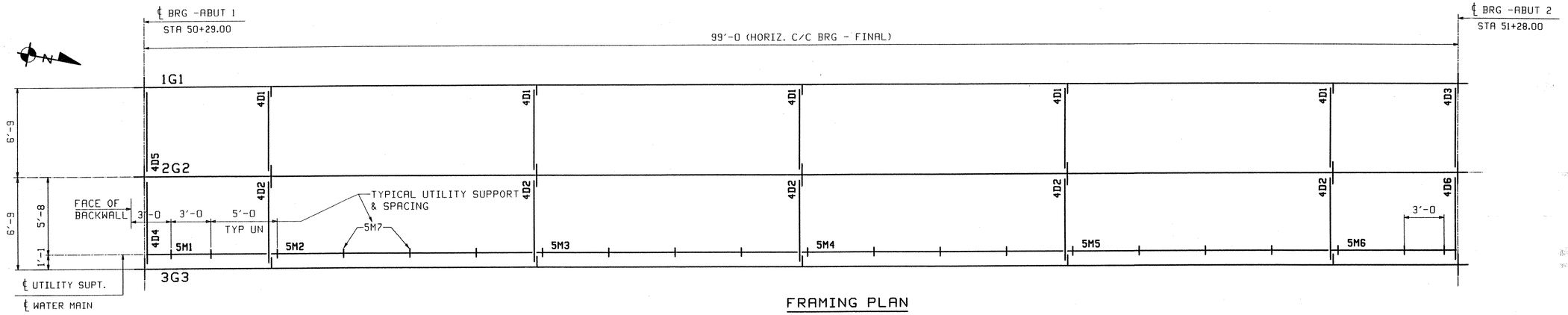

FRAMING PLAN

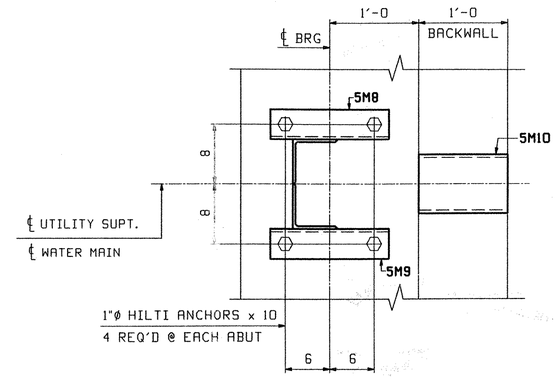

PLAN VIEW - END PIPE RESTRAINT

ABUTMENT 2 - AS SHOWN
ABUTMENT 1 - ROTATE 180°

FIELD BOLT LIST						A325 Type 3 BOLTS								
LINE	NO REQ'D.	BOLT DIAM.	BOLT LEN.	BOLTS /CONN.	# OF CONN.	GRIP	THICKNESS OF PCS. CONNECTED						WASH CODE	PIECES CONNECTED AND REMARKS
1														**INT DIAPHRAGMS**
2	140	7/8	2 1/2	14	10	15/16	7/16	1/2					2	DIAPHRAGM WEB TO CONNECTION PLATE △1
3														
4														**END DIAPHRAGMS**
5	112	7/8	2 3/4	28	4	1 5/16	7/16	7/8					2	DIAPHRAGM WEB TO BRG STIFFENER
6														
7														**UTILITY SUPPORTS**
8	24	5/8	2	2	12	11/16	5/16	3/8					2	CONNECTION TEE TO CONNECTION ANGLE

WASHER CODES

2: 2 Hard Flat Washers

FIELD BOLT SUMMARY			2% ADDED, MIN. 2 EXTRA			
LINE	NO. OF BOLTS	BOLT DIAM.	TYPE	BOLT LEN	ACTUAL COUNT	REMARKS
1	26	5/8	A325 Type 3	2	24	
2						
3	52	Hard Flat Washers		for 5/8 ø	BOLT	
4						
5						
△1 6	143	7/8	A325 Type 3	2 1/2	140	
7	114	7/8	A325 Type 3	2 3/4	112	
8						
△1 9	514	Hard Flat Washers		for 7/8 ø	BOLT	TYPE 436W
10						
11						
12						

RECEIVED
CK'D BY EC CK'D BY KOAH
MAY 0 1 2006
RESUBMIT ____ APPROVED ✓
BY CPW DATE 5/2/06

REV.	REMARKS	DATE	DWN	CHK	APP	Q.A.	NO.	DIA.	LGT	TYPE	WASHER
	OUT FOR APPROVAL	3/6/06									
	OUT FOR APPROVAL	4/27/06									
	ISSUED TO SHOP										
	FIELD & OFFICE										
△1	APVL COMMENTS	4/19	JTB	PCP							

MATERIAL: | ELECTRODES: | HOLES: | SHOP BOLTS:

SURFACE PREP. & PAINT:

DESCRIPTION: FRAMING PLAN

JOB: "B" STREET OVER LAMOILLE RIVER
BRIDGE NO 53
MORRISTOWN, VT. (LAMOILLE COUNTY)

TENSOR 2624

PROJ NO. BRZ 1446(15)

CUSTOMER: A.L. S[illegible]. ONGE CONTRACTORS, INC.

DRAWN BY	DATE
JTB	02/21
CHKD BY	
PCP	02/28
APPROV BY	
SUPERVISOR	W. J. GATTI
Q.A.	

CASCO BAY STEEL STRUCTURES, INC.
75 SPRING HILL ROAD SACO, MAINE 04072
PHONE (207) 282-7360 FAX. (207) 282-1179

JOB NO.	DRG. NO.
292	E1
05455	REV. △1

PCP Tue Apr 25 07:47:16 EDT 2006 /users/jobs/2624/E1 : Rev1

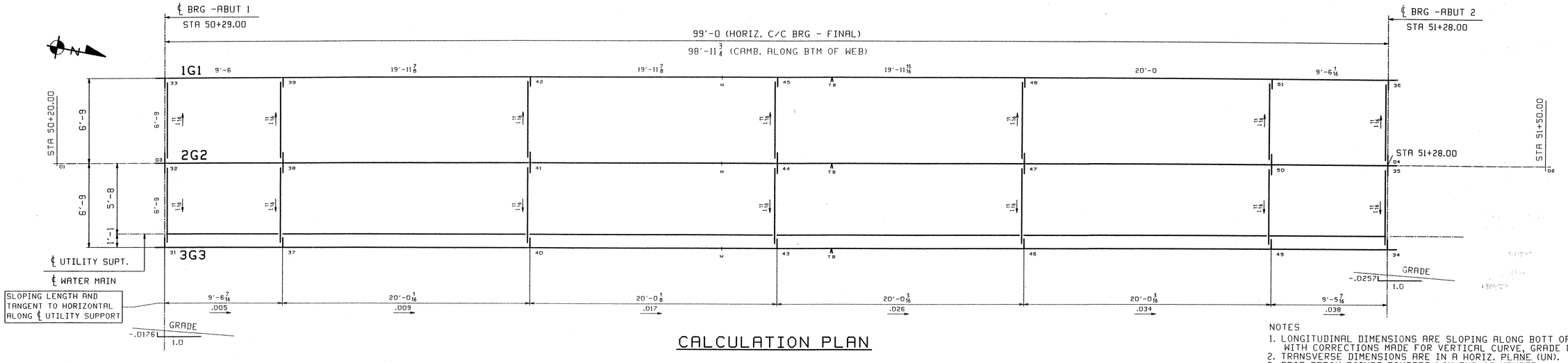

CALCULATION PLAN

NOTES
1. LONGITUDINAL DIMENSIONS ARE SLOPING ALONG BOTT OF WEB WITH CORRECTIONS MADE FOR VERTICAL CURVE, GRADE & DL CAMBER (UN).
2. TRANSVERSE DIMENSIONS ARE IN A HORIZ. PLANE (UN).
3. DROP ARROW POINTS TOWARDS LOW END OF MEMBER.
4. ENDS OF GIRDERS AND BRG. STIFF'S ARE VERTICAL AFTER DL ROTATION.
5. CF STIFF, INT STIFF & FIELD SPLICES ARE NORMAL TO GRADE.
6. BOTT PT NUMBERS =TOP PT NUMBERS + 100.
7. CROSSFRAMES DROPS ARE CALCULATED IN THEIR FINAL POSITION.

**** NOTE ****
THE PURPOSE OF THIS DRAWING IS TO COORDINATE GEOMETRIC CONTROL INFORMATION. THIS DWG IS SUBMITTED FOR INFORMATION ONLY AND IS NOT INTENDED FOR SHOP FABRICATION.

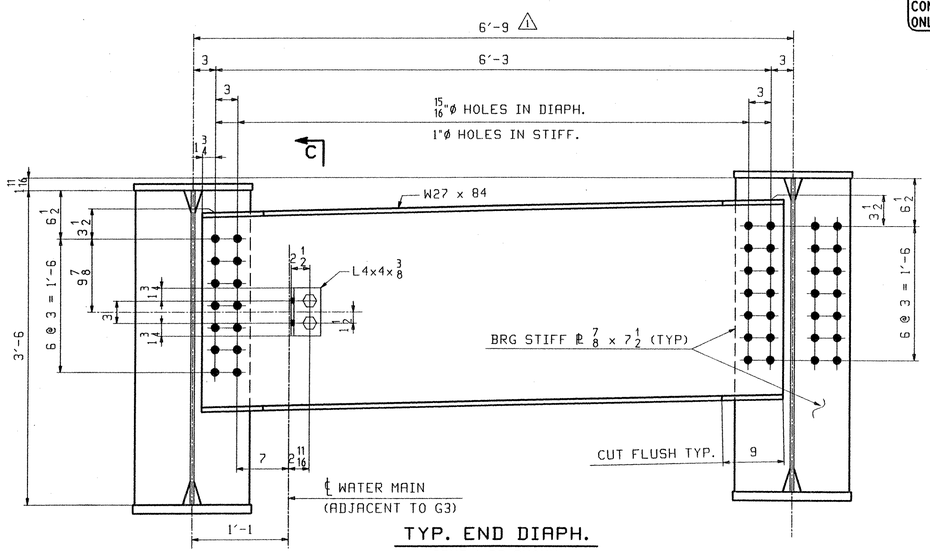

TYP. END DIAPH.
ABUT 1 AS SHOWN
ABUT 2 OPP. HAND

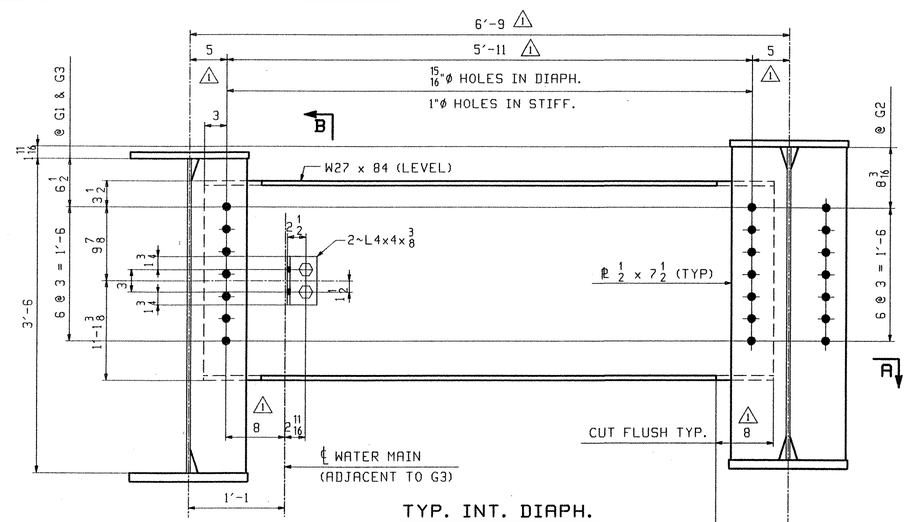

TYP. INT. DIAPH.

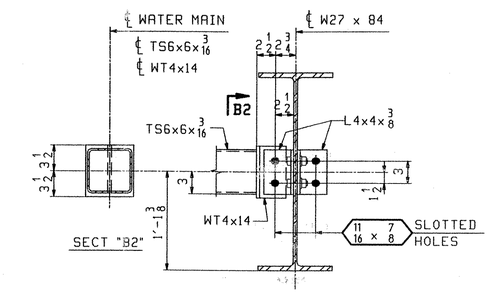

SECT "B"

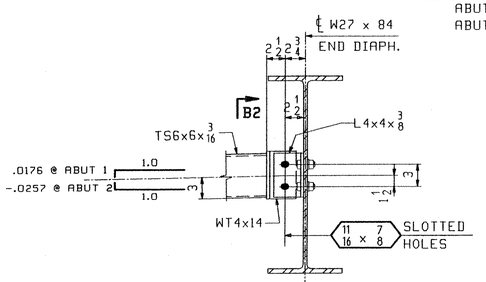

SECT "C"

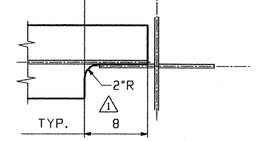

SECT "A"

RECEIVED
CK'D BY ELP OK'D BY KMH
MAY 01 2006
RESUBMIT ____ APPROVED ✓
BY CPW DATE 5/2/06

OUT FOR APPROVAL	3/6/06									
OUT FOR APPROVAL	4/27/06									
ISSUED TO SHOP										
FIELD & OFFICE										
1 APVL COMMENTS	4/17	WL	DO							
REV. REMARKS	DATE	DWN	CHK	APP	Q.A.	NO.	DIA.	LGT	TYPE	WASHER

MATERIAL: M270-50W	ELECTRODES:	HOLES: 15/16Ø (UN)	SHOP BOLTS: NONE
SURFACE PREP. & PAINT:			

DESCRIPTION: CALCULATION PLAN / LAYOUTS	DRAWN BY	DATE
JOB: "B" STREET OVER LAMOILLE RIVER BRIDGE NO 53 MORRISTOWN, VT. (LAMOILLE COUNTY)	WL	01/28
	CHKD BY	
	DO	02/04
	APPROV BY	
TENSOR 2624	SUPERVISOR	H. J. GATTI
PROJ NO. BRZ 1446(15)	Q.A.	
CUSTOMER: A.L. ST. ONGE CONTRACTORS, INC.		
CASCO BAY STEEL STRUCTURES, INC.	JOB NO.	DRG. NO.
75 SPRING HILL ROAD SACO, MAINE 04072	292	WS1
PHONE (207) 23 -7360 FAX. (207) 282-1179	05555	REV. 1

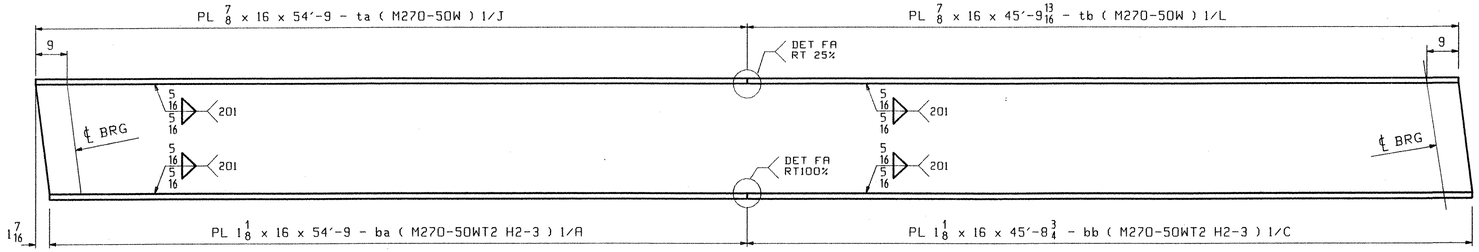

FLANGE DIAGRAM FOR 1G1 THRU 3G3 (3 ALIKE)

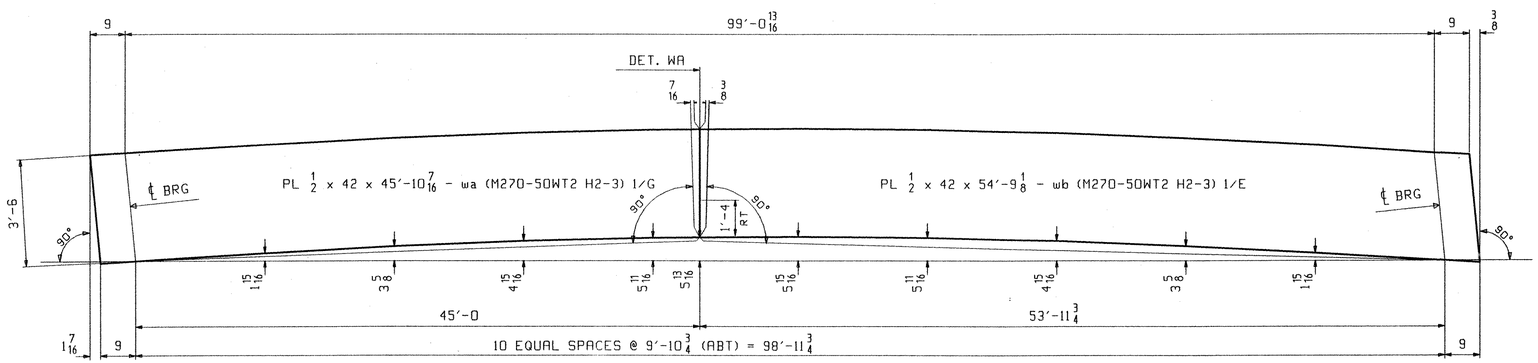

CAMBER DIAGRAM FOR 1G1 THRU 3G3 (3 ALIKE)

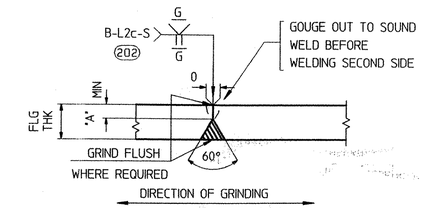

FLANGE PLATE SPLICE DETAIL "FA"

FLG THK	"A"
7/8	1/4
1 1/8	3/8

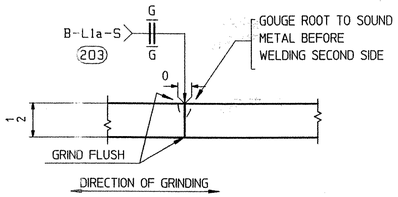

WEB PLATE SPLICE DETAIL "WA"

REV.	REMARKS	DATE	DWN	CHK	APP	Q.A.	NO.	DIA.	LGT	TYPE	WASHER
	OUT FOR APPROVAL	3/6/06									
	OUT FOR APPROVAL	4/27/06									
	ISSUED TO SHOP										
	FIELD & OFFICE										

MATERIAL: | ELECTRODES: | HOLES: | SHOP BOLTS:

SURFACE PREP. & PAINT:

DESCRIPTION: CAMBER & FLANGE DIAGRAM

JOB: "B" STREET OVER LAMOILLE RIVER
BRIDGE NO 53
MORRISTOWN, VT. (LAMOILLE COUNTY)

TENSOR 2624

PROJ NO. BRZ 1446(15)

CUSTOMER: A.L. ST. ONGE CONTRACTORS, INC.

DRAWN BY	DATE
WL	01/28
CHKD BY	
DO	02/04
APPROV BY	
SUPERVISOR	W. J. GATTI
Q.A.	

RECEIVED
CK'D BY ELR CK'D BY RMH
MAY 0 1 2006
RESUBMIT ____ APPROVED ✓
BY CPW DATE 5/2/06

CASCO BAY STEEL STRUCTURES, INC.
75 SPRING HILL ROAD SACO, MAINE 04072
PHONE (207) 282-7360 FAX. (207) 282-1179

JOB NO.	DRG. NO.
292	C1
05655	REV. △

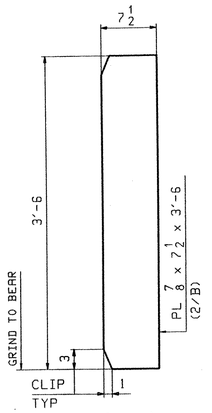

4 ~ x1a
BRG STIFF @ FASCIA

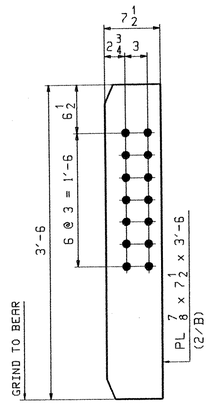

8 ~ x1b
BRG STIFF

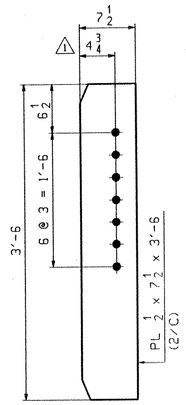

10 ~ x1c
CONN PL - LOW END

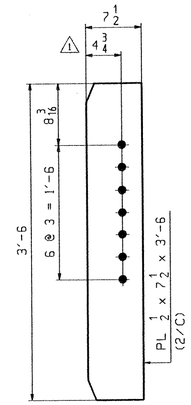

10 ~ x1d
CONN PL - HIGH END

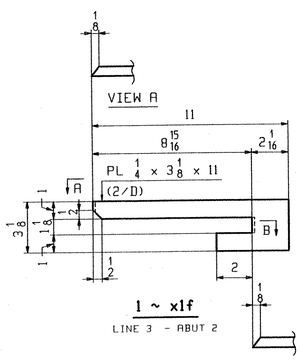

1 ~ x1f
LINE 3 - ABUT 2

SECTION B

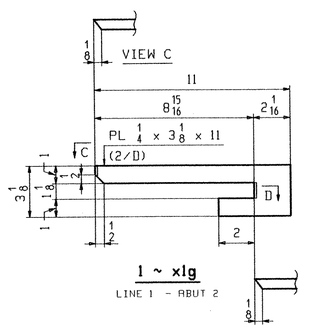

1 ~ x1g
LINE 1 - ABUT 2

SECTION D

NOTES:
ALL MATERIAL SHALL BE M270-50W.
ALL BOLT HOLES SHALL BE 1"ø (OVS) FOR 7/8"ø HSB.
FOR GENERAL NOTES SEE DRAWING GN1.

REV.	REMARKS	DATE	DWN	CHK	APP	Q.A.	NO.	DIA.	LGT	TYPE	WASHER
	OUT FOR APPROVAL	3/6/06									
	OUT FOR APPROVAL	4/27/06									
	ISSUED TO SHOP										
	FIELD & OFFICE										
1	APVL COMMENTS	4/19	JTB	PCP							

MATERIAL:	ELECTRODES:	HOLES:	SHOP BOLTS:
M270-50W		1"ø (OVS)	NONE

SURFACE PREP. & PAINT:
SEE DRAWING GN1

DESCRIPTION: GIRDER STANDARDS

JOB: "B" STREET OVER LAMOILLE RIVER
BRIDGE NO 53
MORRISTOWN, VT. (LAMOILLE COUNTY)

TENSOR 2624

PROJ NO. BRZ 1446(15)

CUSTOMER: A.L. ST. ONGE CONTRACTORS, INC.

	DRAWN BY	DATE
	JTB	02/21
	CHKD BY	
	PCP	02/28
	APPROV BY	
	SUPERVISOR	W. J. GATTI
	Q.A.	

CASCO BAY STEEL STRUCTURES, INC.
75 SPRING HILL ROAD SACO, MAINE 04072
PHONE (207) 282-7360 FAX. (207) 282-1179

JOB NO.	DRG. NO.
292	X1
05755	REV. 1

RECEIVED
CK'D BY EL CK'D BY KMH
MAY 01 2006
RESUBMIT ____ APPROVED ✓
BY GPW DATE 5/2/06

PCP Tue Apr 25 07:48:23 EDT 2006 /users/jobs/292/x1.dgn

ABM INFO		SHIP	BILL OF MATERIAL						JOB NO.	DRAWING NO.	REV.
									292	1	1
PAGE	LINE	MARK	QTY	MARK	MATERIAL	LENGTH FT	LENGTH INCHES	REMARKS	WT	PROCUREMENT NOTES	
		1G1	1		GIRDER				18675		
1	G		1	wa	PL $\frac{1}{2}$×42	45	$10\frac{7}{16}$	(M270-50WT2) (H2-3)			
1	E		1	wb	PL $\frac{1}{2}$×42	54	$9\frac{1}{8}$	(M270-50WT2) (H2-3)			
1	J		1	ta	PL $\frac{7}{8}$×16	54	9				
1	L		1	tb	PL $\frac{7}{8}$×16	45	$9\frac{13}{16}$				
1	A		1	ba	PL $1\frac{1}{8}$×16	54	9	(M270-50WT2) (H2-3)			
1	C		1	bb	PL $1\frac{1}{8}$×16	45	$8\frac{3}{4}$	(M270-50WT2) (H2-3)			
2	B		2	x1a	PL $\frac{7}{8}$×$7\frac{1}{2}$	3	6	MIE			
2	B		2	x1b	PL $\frac{7}{8}$×$7\frac{1}{2}$	3	6	MIE			
2	C		5	x1c	PL $\frac{1}{2}$×$7\frac{1}{2}$	3	6				
2	D		1	x1g	PL $\frac{1}{4}$×$3\frac{1}{8}$	0	11				

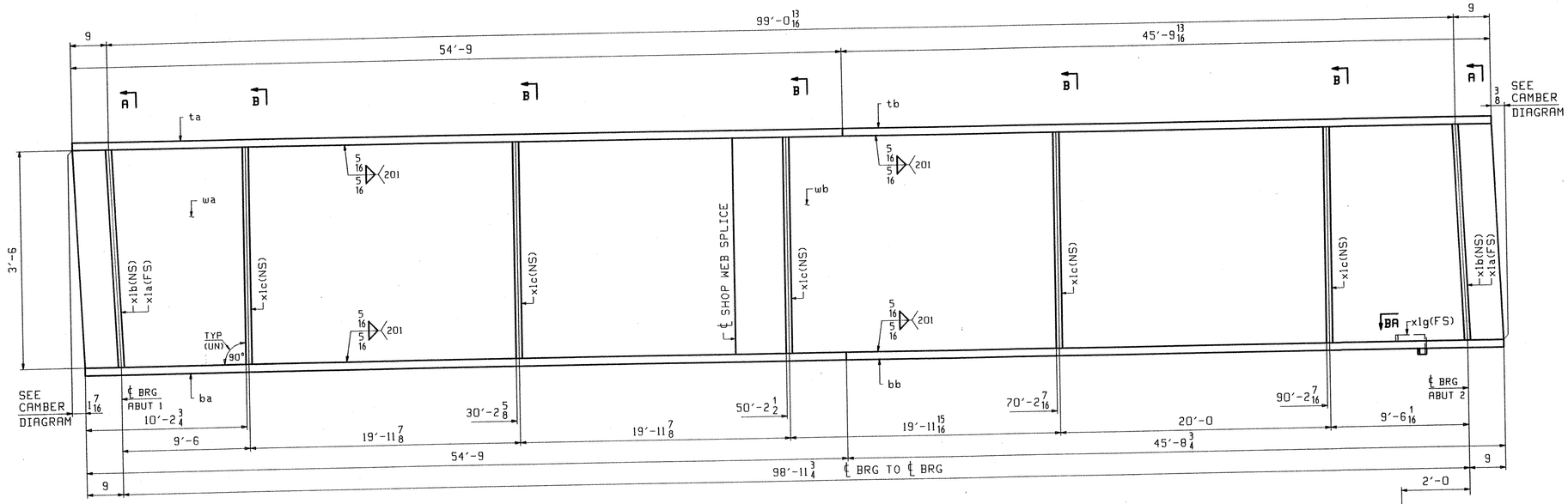

ONE - GIRDER - 1G1

FOR GIRDER STANDARD DETAILS SEE DRAWING X1.
FOR CAMBER DIAGRAM SEE DRAWING C1.
FOR GENERAL NOTES SEE DRAWING GN1.
H2-3 DENOTES MATERIAL SUBJECT TO CHARPY V-NOTCH TESTING.

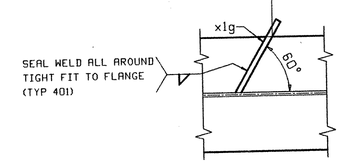

SECTION BA

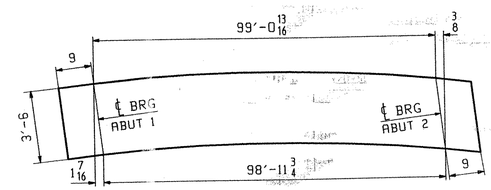

ORIENTATION DIAGRAM
FOR CAMBER SEE DWG C1

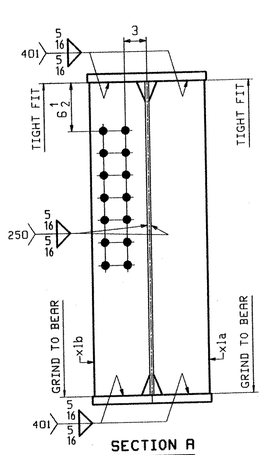

SECTION A

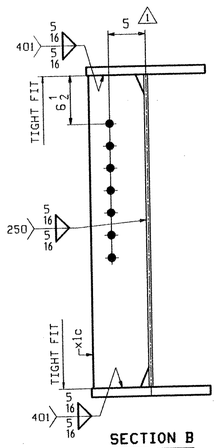

SECTION B

OUT FOR APPROVAL	3/6/06										
OUT FOR APPROVAL	4/27/06										
ISSUED TO SHOP											
FIELD & OFFICE											
1 APVL COMMENTS	4/19	JTB	PCP								
REV. REMARKS	DATE	DWN	CHK	APP	Q.A.	NO.	DIA.	LGT	TYPE	WASHER	

MATERIAL:	ELECTRODES:	HOLES:	SHOP BOLTS:
M270-50W (UN)		1"ø (OVS)	NONE

SURFACE PREP. & PAINT:
SEE DRAWING GN1

DESCRIPTION: GIRDER - 1G1		DRAWN BY	DATE
JOB: "B" STREET OVER LAMOILLE RIVER BRIDGE NO 53 MORRISTOWN, VT. (LAMOILLE COUNTY)		JTB	02/21
		CHKD BY	
		PCP	02/28
		APPROV BY	
TENSOR 2624		SUPERVISOR	W. J. GATT
PROJ NO. BRZ 1446(15)		Q.A.	
CUSTOMER: A.L. ST. ONGE CONTRACTORS, INC.			
CASCO BAY STEEL STRUCTURES, INC.		JOB NO.	DRG. NO
75 SPRING HILL ROAD SACO, MAINE 04072		292	1
PHONE (207) 282-7360 FAX. (207) 282-1179		05855	REV. 1

RECEIVED
CK'D BY ELK OK'D BY Kwil
MAY 01 2006
RESUBMIT ____ APPROVED ✓
BY CPW DATE 5/2/06

PCP Tue Mar 28 07:47:25 EDT 2006 /users/jobs/292/d1 ; Rev1

ABM INFO		SHIP	BILL OF MATERIAL						JOB NO.	DRAWING NO.	REV.
									292	2	1
PAGE	LINE	MARK	QTY	MARK	MATERIAL	LENGTH FT	LENGTH INCHES	REMARKS	WT	PROCUREMENT NOTES	
		2G2	1		GIRDER				18895		
1	G		1	wa	PL $\frac{1}{2}$x42	45	$10\frac{7}{16}$	(M270-50WT2) (H2-3)			
1	E		1	wb	PL $\frac{1}{2}$x42	54	$9\frac{1}{8}$	(M270-50WT2) (H2-3)			
1	J		1	ta	PL $\frac{7}{8}$x16	54	9				
1	L		1	tb	PL $\frac{7}{8}$x16	45	$9\frac{13}{16}$				
1	A		1	ba	PL $1\frac{1}{8}$x16	54	9	(M270-50WT2) (H2-3)			
1	C		1	bb	PL $1\frac{1}{8}$x16	45	$8\frac{3}{4}$	(M270-50WT2) (H2-3)			
2	B		4	x1b	PL $\frac{7}{8}$x$7\frac{1}{2}$	3	6	M1E			
2	C		10	x1d	PL $\frac{1}{2}$x$7\frac{1}{2}$	3	6				

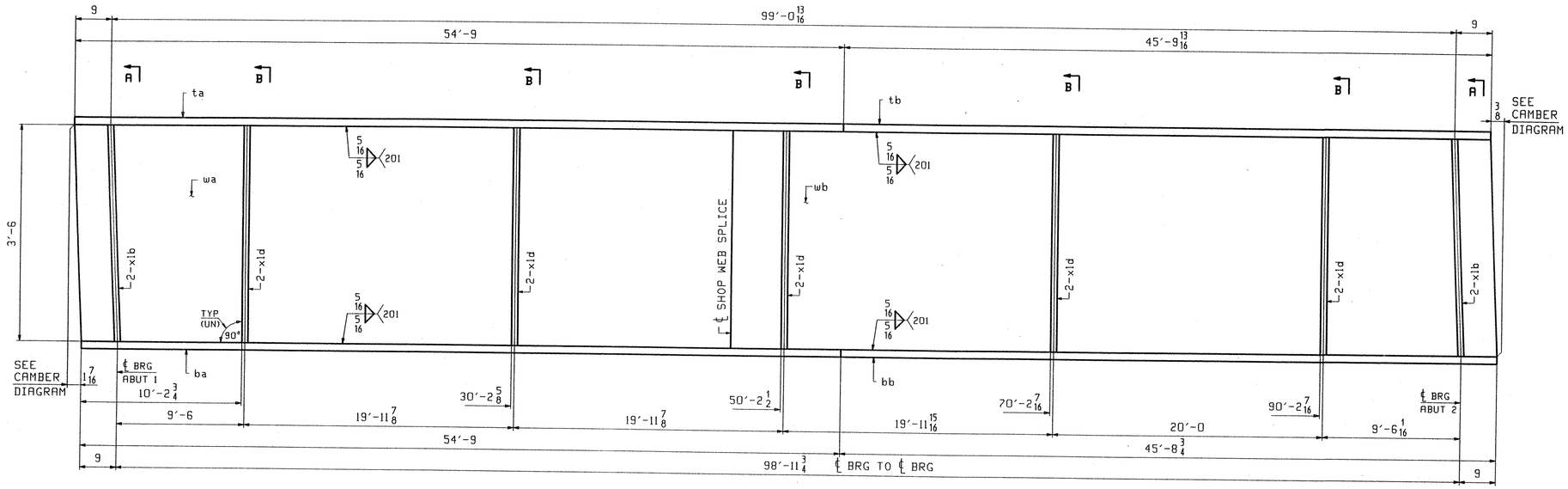

ONE - GIRDER - 2G2

FOR GIRDER STANDARD DETAILS SEE DRAWING X1.
FOR CAMBER DIAGRAM SEE DRAWING C1.
FOR GENERAL NOTES SEE DRAWING GN1.
H2-3 DENOTES MATERIAL SUBJECT TO CHARPY V-NOTCH TESTING.

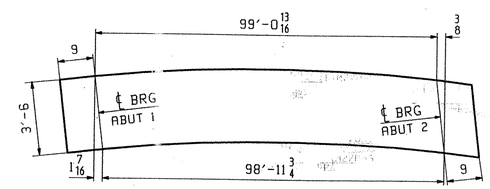

ORIENTATION DIAGRAM
FOR CAMBER SEE DWG C1

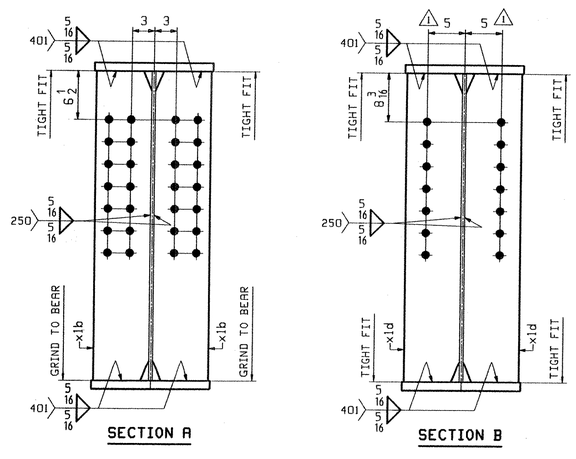

SECTION A

SECTION B

REV.	REMARKS	DATE	DWN	CHK	APP	Q.A.	NO.	DIA.	LGT	TYPE	WASHER
	OUT FOR APPROVAL	3/6/06									
	OUT FOR APPROVAL	4/27/06									
	ISSUED TO SHOP										
	FIELD & OFFICE										
1	APVL COMMENTS	4/19	JTB	PCP							

MATERIAL:	ELECTRODES:	HOLES:	SHOP BOLTS:
M270-50W (UN)		1"Ø (OVS)	NONE

SURFACE PREP. & PAINT:
SEE DRAWING GN1

DESCRIPTION: GIRDER - 2G2

JOB:
"B" STREET OVER LAMOILLE RIVER
BRIDGE NO 53
MORRISTOWN, VT. (LAMOILLE COUNTY)

TENSOR 2624

PROJ NO. BRZ 14 6(15)

CUSTOMER: A.L. ST. ONGE CONTRACTORS, INC.

DRAWN BY	DATE
JTB	02/21
CHKD BY	
PCP	02/28
APPROV BY	
SUPERVISOR	W. J. GATTI
Q.A.	

RECEIVED
CK'D BY ELR OK'D BY
MAY 0 1 2006
RESUBMIT APPROVED
BY CPW DATE 5/2/06

CASCO BAY STEEL STRUCTURES, INC.
75 SPRING HILL ROAD SACO, MAINE 04072
PHONE (207) 282-7360 FAX. (207) 282-1179

JOB NO.	DRG. NO.
292	2
05955	REV. 1

ABM INFO		SHIP	BILL OF MATERIAL						JOB NO.	DRAWING NO.	REV.
									292	3	1
PAGE	LINE	MARK	QTY	MARK	MATERIAL	LENGTH FT	LENGTH INCHES	REMARKS	WT	PROCUREMENT NOTES	
		3G3	1		GIRDER				18675		
1	G		1	wa	PL $\frac{1}{2}$×42	45	$10\frac{7}{16}$	(M270-50WT2) (H2-3)			
1	E		1	wb	PL $\frac{1}{2}$×42	54	$9\frac{1}{8}$	(M270-50WT2) (H2-3)			
1	J		1	ta	PL $\frac{7}{8}$×16	54	9				
1	L		1	tb	PL $\frac{7}{8}$×16	45	$9\frac{13}{16}$				
1	A		1	ba	PL $1\frac{1}{8}$×16	54	9	(M270-50WT2) (H2-3)			
1	C		1	bb	PL $1\frac{1}{8}$×16	45	$8\frac{3}{4}$	(M270-50WT2) (H2-3)			
2	B		2	x1a	PL $\frac{7}{8}$×$7\frac{1}{2}$	3	6	MIE			
2	B		2	x1b	PL $\frac{7}{8}$×$7\frac{1}{2}$	3	6	MIE			
2	C		5	x1c	PL $\frac{1}{2}$×$7\frac{1}{2}$	3	6				
2	D		1	x1f	PL $\frac{1}{4}$×$3\frac{1}{8}$	0	11				

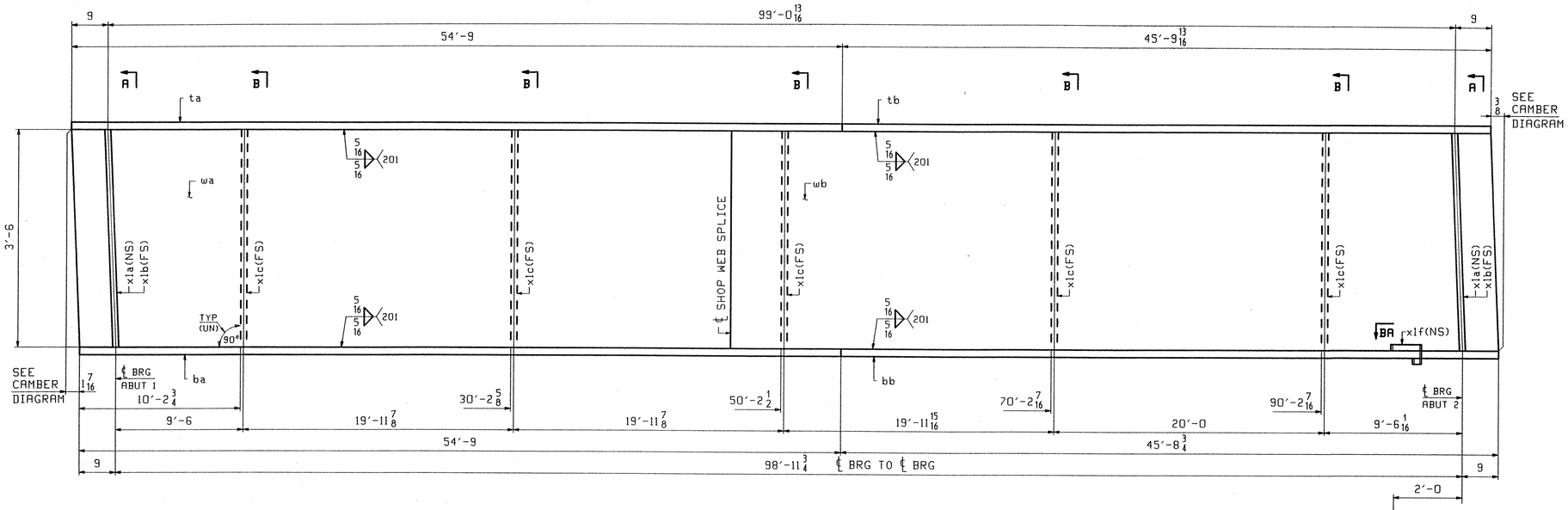

ONE - GIRDER - 3G3

FOR GIRDER STANDARD DETAILS SEE DRAWING X1.
FOR CAMBER DIAGRAM SEE DRAWING C1.
FOR GENERAL NOTES SEE DRAWING GN1.
H2-3 DENOTES MATERIAL SUBJECT TO CHARPY V-NOTCH TESTING.

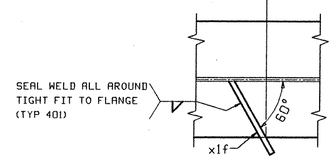

SECTION BA

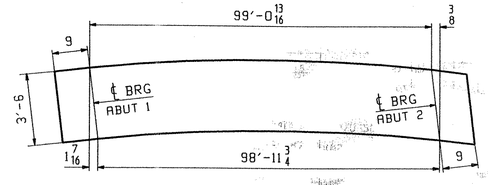

ORIENTATION DIAGRAM
FOR CAMBER SEE DWG C1

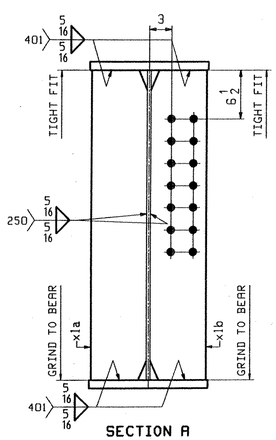

SECTION A

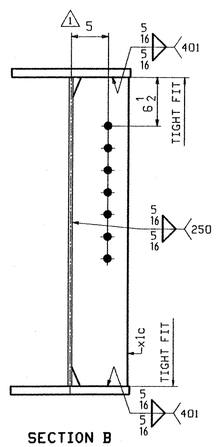

SECTION B

REV.	REMARKS	DATE	DWN	CHK	APP	Q.A.	NO.	DIA.	LGT	TYPE	WASHER
	OUT FOR APPROVAL	3/6/06									
	OUT FOR APPROVAL	4/27/06									
	ISSUED TO SHOP										
	FIELD & OFFICE										
1	APVL COMMENTS	4/19	JTB	PCP							

MATERIAL:	ELECTRODES:	HOLES:	SHOP BOLTS:
M270-50W (UN)		1"ϕ (OVS)	NONE

SURFACE PREP. & PAINT:
SEE DRAWING GN1

DESCRIPTION:	GIRDER - 3G3	DRAWN BY:	DATE
JOB: "B" STREET OVER LAMOILLE RIVER BRIDGE NO 53 MORRISTOWN, VT. (LAMOILLE COUNTY)		JTB	02/21
		CHKD BY	
		PCP	02/28
		APPROV BY	
		SUPERVISOR	W. J. GATTI
PROJ NO. BRZ 1446(15)		Q.A.	
CUSTOMER: A.L. ST ONGE CONTRACTORS, INC.			

TENSOR 2624

CASCO BAY STEEL STRUCTURES, INC.
75 SPRING HILL ROAD SACO, MAINE 04072
PHONE (207) 282-7360 FAX. (207) 282-1179

JOB NO.	DRG. NO.
292	3
060 55	REV. 1

RECEIVED
OK'D BY ELK OK'D BY
MAY 01 2006
RESUBMIT APPROVED ✓
BY CPW DATE 5/2/06

PCP Tue Apr 25 07:47:28 EDT 2006 /users/jobs/2624/3 . Rev1

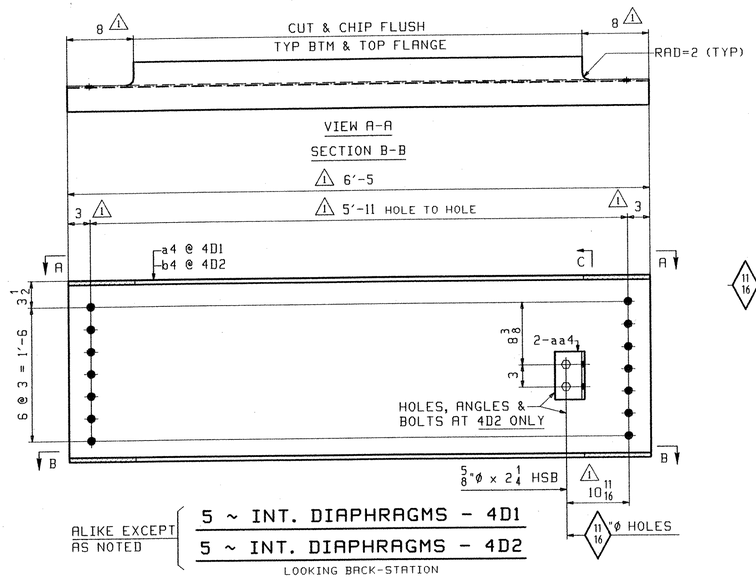

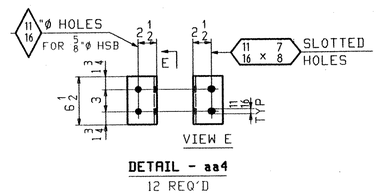

DETAIL - aa4
12 REQ'D

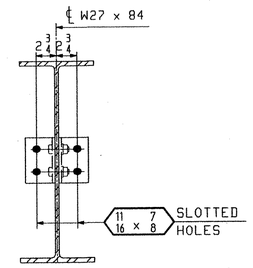

SECTION C

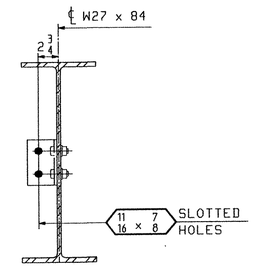

SECTION D

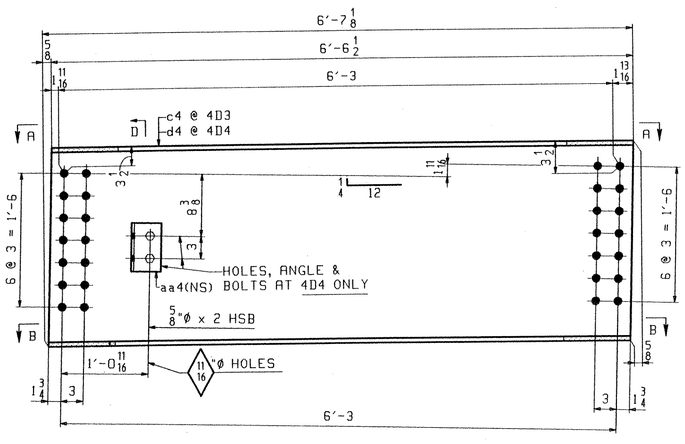

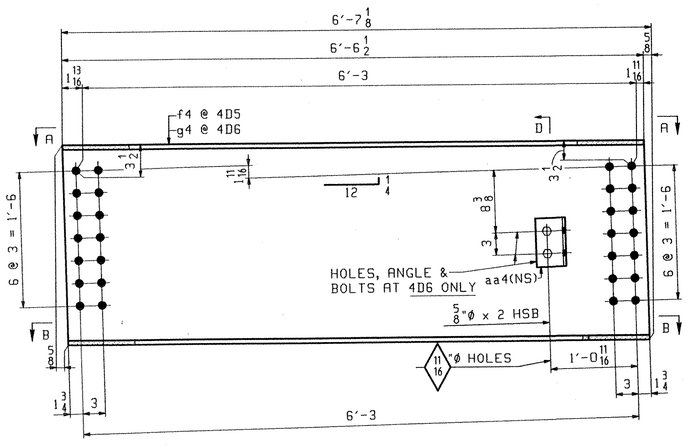

RECEIVED
CK'D BY EL OK'D BY KMH
MAY 0 1 2006
RESUBMIT ____ APPROVED ✓
BY CPW DATE 5/2/06

ABM INFO		SHIP	BILL OF MATERIAL					JOB NO. 292	DRAWING NO. 4	REV. 1
PAGE	LINE	MARK	QTY	MARK	MATERIAL	LENGTH FT	LENGTH INCHES	REMARKS	WT	PROCUREMENT NOTES
		4D1	5		INT DIAPHRAGM				539	
2	H		5	a4	W 27x84	6	5	1		
		4D2	5		INT DIAPHRAGM				550	
2	H		5	b4	W 27x84	6	5	1		
2	R		10	aa4	L 4x4x3/8	0	6 1/2			
3	C		10		5/8 Ø HSB	0	2 1/4	(A325-3)		
3	D		10		5/8 Ø HSW			(F436W)		
		4D3	1		END DIAPHRAGM				554	
2	H		1	c4	W 27x84	6	7 1/8			
		4D4	1		END DIAPHRAGM				560	
2	H		1	d4	W 27x84	6	7 1/8			
2	R		1	aa4	L 4x4x3/8	0	6 1/2			
3	B		2		5/8 Ø HSB	0	2	(A325-3)		
3	D		2		5/8 Ø HSW			(F436W)		
		4D5	1		END DIAPHRAGM				554	
2	H		1	f4	W 27x84	6	7 1/8			
		4D6	1		END DIAPHRAGM				560	
2	H		1	g4	W 27x84	6	7 1/8			
2	R		1	aa4	L 4x4x3/8	0	6 1/2			
3	B		2		5/8 Ø HSB	0	2	(A325-3)		
3	D		2		5/8 Ø HSW			(F436W)		

REV.	REMARKS	DATE	DWN	CHK	APP	Q.A.	NO.	DIA.	LGT	TYPE	WASHER
	OUT FOR APPROVAL	3/4/06									
	OUT FOR APPROVAL	3/27/06									
	ISSUED TO SHOP										
	FIELD & OFFICE										
1	APVL COMMENTS	4/19	JTB	PCP							

MATERIAL: M270-50W (UN)
ELECTRODES:
HOLES: 15/16"Ø (UN)
SHOP BOLTS: AS NOTED
SURFACE PREP. & PAINT: SEE DRAWING GN1

DESCRIPTION: DIAPHRAGMS
JOB: "B" STREET OVER LAMOILLE RIVER
BRIDGE NO 53
MORRISTOWN, VT. (LAMOILLE COUNTY)
TENSOR 2624
PROJ NO. BRZ 446(15)
CUSTOMER: A.L. ST. ONGE CONTRACTORS, INC.

DRAWN BY	DATE
JTB	02/21
CHKD BY	
PCP	02/28
APPROV BY	
SUPERVISOR	W. J. GATTI
Q.A.	

CASCO BAY STEEL STRUCTURES, INC.
75 SPRING HILL ROAD SACO, MAINE 04072
PHONE (207) 282-7360 FAX. (207) 282-1179

JOB NO.	DRG. NO.
292	4
06155	REV. 1

PCP Tue Mar 28 07:47:47 EST 2006 /users/jmk/292x4.1.Rev1

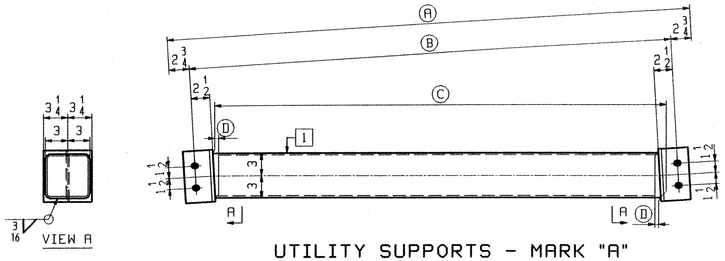

UTILITY SUPPORTS - MARK "A"

MARK "A"	QTY	Ⓐ	Ⓑ	Ⓒ	Ⓓ	I	
5M1	1	9′-5 5/16	8′-11 13/16	8′-6 13/16	0	a5	.005
5M2	1	20′-0 1/16	19′-6 9/16	19′-1 5/8	1/16	b5	.009
5M3	1	20′-0 1/8	19′-6 5/8	19′-1 3/4	1/8	c5	.017
5M4	1	20′-0 3/16	19′-6 11/16	19′-1 15/16	1/8	d5	.026
5M5	1	20′-0 3/16	19′-6 11/16	19′-2	3/16	f5	.034
5M6	1	9′-5 1/4	8′-11 3/4	8′-7 1/16	1/4	g5	.038

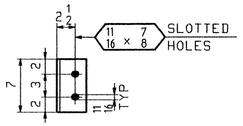

DETAIL - k5
12 REQ'D

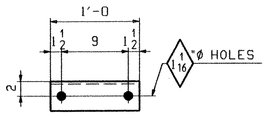

16 ~ PIPE SUPPORT - 5M7

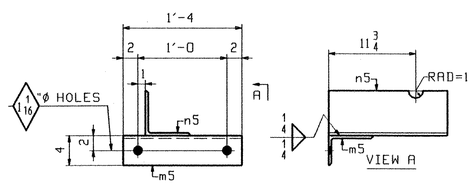

2 ~ PIPE SUPPORT - 5M8

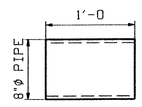

2 ~ STEEL SLEEVE - 5M10

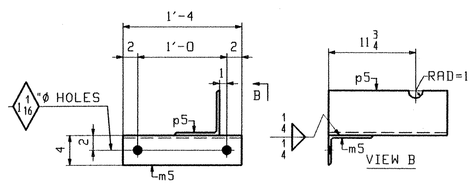

2 ~ PIPE SUPPORT - 5M9

ABM INFO PAGE	ABM INFO LINE	SHIP MARK	QTY	MARK	MATERIAL	LENGTH FT	LENGTH INCHES	REMARKS	WT	PROCUREMENT NOTES
					PIPE SUPORTS					
2	Q	5M7	21		L 4x4x1/4	1	0		7	
		5M8	2		PIPE SUPORTS				36	
2	T		2	m5	L 6x4x3/8	1	4	(A276) STAINLESS STEEL		
2	U		2	n5	L 6x6x3/8	1	4	(A276) STAINLESS STEEL		
		5M9	2		PIPE SUPORTS				36	
2	T		2	m5	L 6x4x3/8	1	4	(A276) STAINLESS STEEL		
2	U		2	p5	L 6x6x3/8	1	4	(A276) STAINLESS STEEL		
					STEEL SLEEVE					
2	Y	5M10	2		8 ø PIPE	1	0	(A53) SCHED 40	29	

BILL OF MATERIAL — JOB NO. — DRAWING NO. 5 — REV.

ABM INFO PAGE	ABM INFO LINE	SHIP MARK	QTY	MARK	MATERIAL	LENGTH FT	LENGTH INCHES	REMARKS	WT	PROCUREMENT NOTES
		5M1	1		UTILITY SUPPORT				141	
2	L		1	a5	TS 6x6x3/16	8	6 13/16	(AB4)		
2	N		2	k5	WT 4x14	0	7			
		5M2	1		UTILITY SUPPORT				294	
2	K		1	b5	TS 6x6x3/16	19	1 5/8	(AB4)		
2	N		2	k5	WT 4x14	0	7			
		5M3	1		UTILITY SUPPORT				295	
2	K		1	c5	TS 6x6x3/16	19	1 3/4	(AB4)		
2	N		2	k5	WT 4x14	0	7			
		5M4	1		UTILITY SUPPORT				295	
2	K		1	d5	TS 6x6x3/16	19	1 15/16	(AB4)		
2	N		2	k5	WT 4x14	0	7			
		5M5	1		UTILITY SUPPORT				295	
2	K		1	f5	TS 6x6x3/16	19	2	(AB4)		
2	N		2	k5	WT 4x14	0	7			
		5M6	1		UTILITY SUPPORT				141	
2	L		1	g5	TS 6x6x3/16	8	7 1/16	(AB4)		
2	N		2	k5	WT 4x14	0	7			

BILL OF MATERIAL — JOB NO. 292 — DRAWING NO. 5 — REV.

REV.	REMARKS	DATE	DWN	CHK	APP	Q.A.	NO.	DIA.	LGT	TYPE	WASHER
	OUT FOR APPROVAL	3/6/06									
	OUT FOR APPROVAL	4/27/06									
	ISSUED TO SHOP										
	FIELD & OFFICE										

MATERIAL: M270-50W (UN)
ELECTRODES:
HOLES: AS NOTED
SHOP BOLTS: NONE
SURFACE PREP. & PAINT: SEE DRAWING GN1

DESCRIPTION: UTILITY SUPPORTS
JOB: "B" STREET OVER LAMOILLE RIVER
BRIDGE NO 53
MORRISTOWN, VT. (LAMOILLE COUNTY)
TENSOR 2624
PROJ NO. BRZ 1446(15)
CUSTOMER: A.L. ST. ONGE CONTRACTORS, INC.

DRAWN BY	DATE
JTB	02/21
CHKD BY	
PCP	02/28
APPROV BY	
SUPERVISOR	W. J. GATTI
Q.A.	

CASCO BAY STEEL STRUCTURES, INC.
75 SPRING HILL ROAD SACO, MAINE 04072
PHONE (207) 282-7360 FAX. (207) 282-1179

JOB NO.	DRG. NO.
292	5
062255	REV. △

RECEIVED
CK'D BY ELR OK'D BY KMH
MAY 01 2006
RESUBMIT ____ APPROVED ✓
BY CPW DATE 5/2/06

PCP Mar 1 10:14:15 EST 2006 C:\PW_WORK\jobs\062255\dwg\062255-5.dwg

AUTHORITY OF TRANSPORTATION
PROJ. NO. BRZ-1446-(15)
MORRISTOWN, VT

EMS-QC-110

COSMEC, INC.
70 SOUTH STREET
WALPOLE, MA 02081
PH# 508-668-6600
FAX# 508-660-1022

ENGINEERING AND MANUFACTURING STANDARD
PTFE FACING AND STEEL
OR PREFORMED FABRIC SUBSTRATE
SURFACE PREPARATION AND ADHESIVE PROCEDURE

The PTFE facing shall be prepared for bonding to a substrate material by chemically etching the face to be bonded using the sodium ammonia process.

The mating surface of the substrate shall be prepared for bonding using a three-step process as follows:

1. preliminary degrease using methyl ethyl ketone.
2. mechanically roughen to approx. 125 RMS and thoroughly brush and clean for final degreasing.
3. final degrease using methyl ethyl ketone

The PTFE and substrate mating surfaces shall be clean and dry with final degreasing performed within 30 minutes of bonding. Adhesive shall consist of a two-part epoxy adhesive system conforming to Military Specification MMM-A-134

The adhesive shall be applied to the full area of the contact surface in an even manner so as to establish a glue line not less than .002 inch nor more than .010 inch thick. Surfaces being bonded are to be assembled immediately with open assembly time not to exceed 20 minutes.

The PTFE material shall be greater in width and length than the substrate material by at least ½ inch when bonded. The PTFE shall be applied with contact starting at one edge and with contact progressing across entire bonded surface to eliminate air entrapment. The PTFE is to be in full contact with the steel or preformed fabric substrate. Curing of the bond shall be done under pressure of approx. 2-100 psi for 10-12 hours at approx. 70°F or other schedules as established by the manufacturer of the adhesive.

The PTFE shall be carefully trimmed to the same size as the substrate after bond curing and all bonds shall be visually inspected for bond retention.

VTRANS
RECEIVED
CK'D BY _____ CK'D BY JWC
MAR 0 1 2006
RESUBMIT _____ APPROVED ✓
BY DATE 3/10/06

063bb

AUTHORITY OF TRANSPORTATION
PROJ. NO. BR2-1446-(15)
MORRISTOWN, VT

COSMEC INC.

WELDING PROCEDURE SPECIFICATION

SPECIFICATIONS AND CODE: D1.6 (D1.3)
MATERIAL SPECIFICATION ASTM A240 TYPE 304 TO ASTM A709 GR 50W
WELDING PROCESS---------- GTAW
MANUAL OR MACHINE------- MANUAL
POSITION OF WELDING----- 1F & 2F
FILLER METAL SPECIFICATION ER309L CLASSIFICATION: A5.9
MANUFACTURER: HARRIS WELCO TRADENAME:
FLUX------ INTERNAL
SHIELDING GAS---------- ARGON FLOW RATE 45 CFH
SINGLE OR MULTIPLE PASS SINGLE
SINGLE OR MULTIPLE ARC SINGLE
WELDING CURRENT---------- DC
POLARITY : REVERSE (EN)
WELDING PROGRESSION----------
ROOT TREATMENT---------- CLEANED & PREPARED BRIGHT METAL
PREHEAT AND INTERPASS TEMPERATURE---------- SEE BELOW
POSTHEAT TEMPERATURE N/A
HEAT IMPUT MIN.---------- MAX.----

WELDING PROCEDURE

PASS NO.	ELECTRODE SIZE	WELDING CURRENT AMPERES	VOLTS	TRAVEL SPEED	JOINT DETAIL
ALL	3/32"	130--155	14-17	6.75--8.5	LAP JOINT
		18 GA THRU 10 GA			
		8M THICKNESS			

PREHEAT TEMPS. ***PREHEAT UNTIL NO MOSITURE PRESENT

THICKNESS	TEMP.
UP TO 3/4"	100 DEG.
OVER 3/4" TO 1 1/2"	100 DEG.
OVER 1 1/2" TO 2 1/2"	100 DEG.
OVER 2 1/2"	100 DEG.

THIS PROCEURE MAY VARY DUE TO FABRICATION SEQUENCE, FIT-UP, PASS SIZE, ETC.
WITHIN THE LIMITATION OF VARIABLES GIVEN IN SECTION 5.
SUPPORTING POR: GTAW-WF-05
PROCEDURE NO. GTAW-WF

CONTRACTOR: COSMEC INC.
AUTHORIZED BY: DONALD VOSE
CWI#:01100851 Donald Vose

REVISION NO. 1

DATE:--- 2/1/2005

VTRANS RECEIVED
OK'D BY_____ OK'D BY J.W.C.
MAR 01 2006
RESUBMIT_____ APPROVED_____
BY DATE 3/10/06

AWS QC 1 DONALD E VOSE 01100851 CWI

TOTAL P.03

064 bb

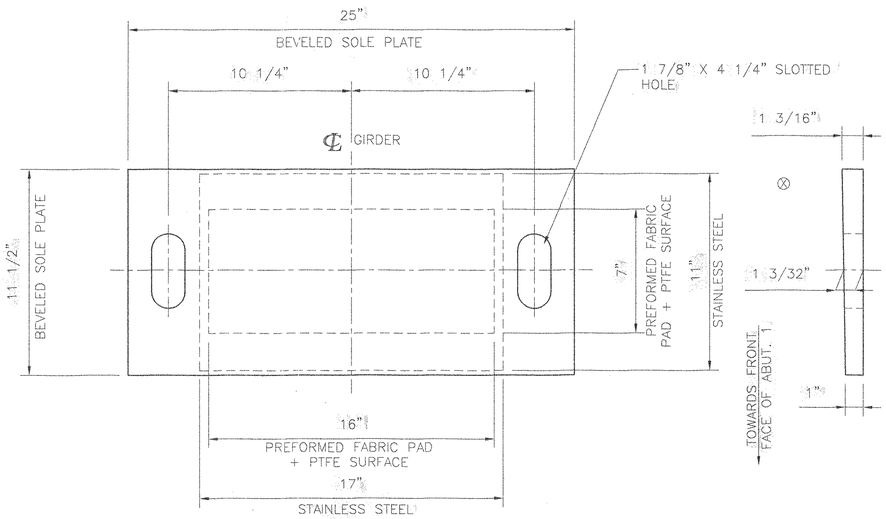

PLAN

SIDE ELEVATION

BEVELED SOLE PLATE ONLY

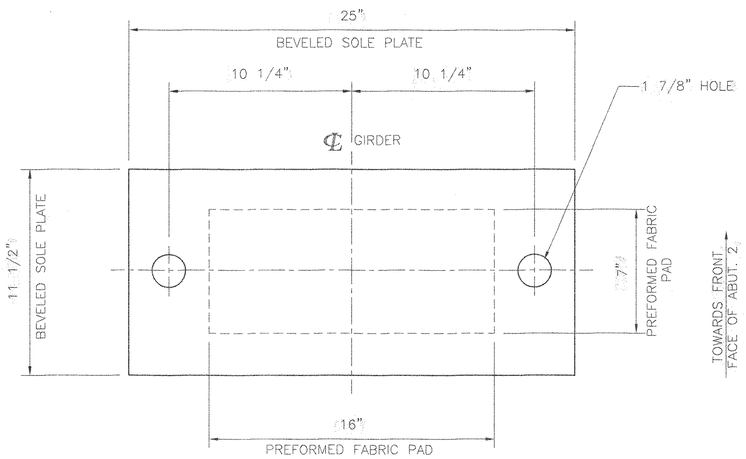

PLAN

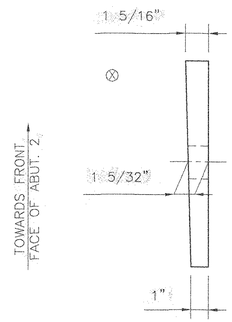

SIDE ELEVATION

BEVELED SOLE PLATE ONLY

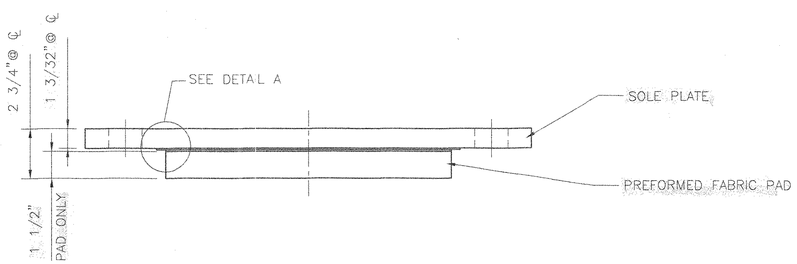

FRONT ELEVATION

COSMEC EXPANSION PREFORMED FABRIC PAD BEARING

LOCATION: ABUTMENT 1
QUANTITY: 3

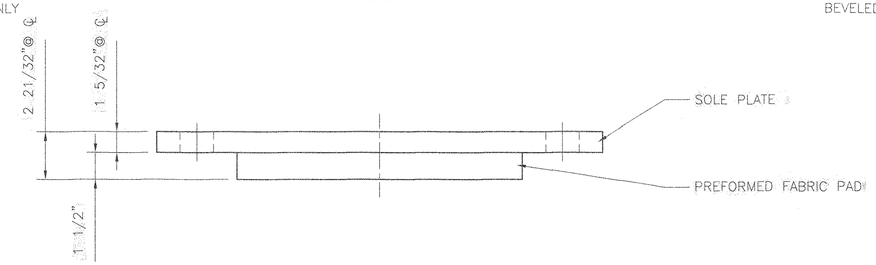

FRONT ELEVATION

COSMEC FIXED PREFORMED FABRIC PAD BEARING

LOCATION: ABUTMENT 2
QUANTITY: 3

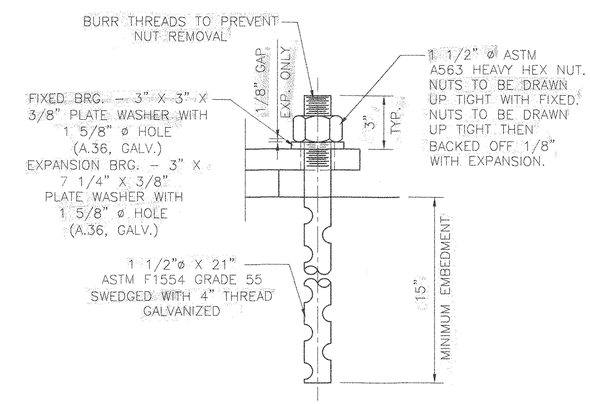

ANCHOR BOLT DETAIL

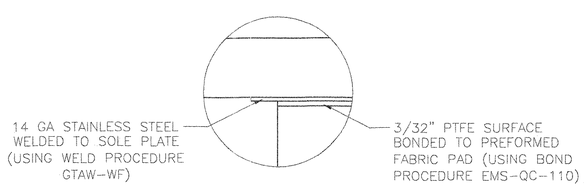

DETAIL A

BEARING NOTES

1. ALL MATERIALS USED IN THE FABRICATION OF THESE BEARINGS SHALL BE MADE IN THE U.S.A.
2. BEARINGS ARE TO BE SHIPPED AS COMPLETE UNITS, STEEL BANDED, AND SHALL BE WRAPPED TO PROTECT FROM MOISTURE AND DIRT DURING TRANSIT AND STORAGE.
3. LOCATION OF FABRICATION PLANT – 70 SOUTH STREET WALPOLE, MA 02081
4. COSMEC, INC. REPRESENTATIVE – MR. MATT McANDREWS (508) 668-6600
5. BEARINGS SHALL BE STORED IN A CLEAN, DRY, LEVEL UPRIGHT POSITION.
6. ⊗ MARKS THE THICK END OF SOLE PLATE
7. ALL EDGES OF STEEL PLATES SHALL HAVE 1/16" MINIMUM RADIUS.
8. DESIGN CRITERIA:
   A. BASE PLATE TO CONCRETE DESIGN PRESSURE = 1000 PSI MAXIMUM.
   B. MINIMUM ALLOWABLE DESIGN ROTATION = 0.015 RADIANS
   C. HORIZONTAL CAPACITY SHALL BE A MINIMUM 10% OF VERTICAL LOAD.
   D. DESIGN LOAD PER BEARING = 111.37 KIPS
      DL + SDL = 55.53 K
      LL = 55.84 K
      TOTAL = 111.37 K

MATERIALS

STEEL – ASTM A709 GR. 36 ZINC METALIZED & SEALED.

STAINLESS STEEL – ASTM A.240 TYPE 304, 10 RMS FINISH OR LESS

PTFE – ASTM D4894 VIRGIN UNFILLED

PREFORMED FABRIC PAD – AASHTO DIV. II SPEC. 18.4.9.1

ANCHOR BOLTS, NUTS & WASHERS – SEE DETAIL, ALL GALV.

STRUCTURES COPY
RECEIVED
CK'D BY KMH OK'D BY HTC
MAR 0 1 2006
RESUBMIT ____ APPROVED ✓
BY CPW DATE 3/9/06

REV.		BY:	DATE	CK'D BY:	DATE

$231.88 $231.88

STATE OF VERMONT
AGENCY OF TRANSPORTATION

PROJECT NO. BRZ-1446-(15)
MORRISTOWN, VT

COSMEC, INC. 70 SOUTH STREET WALPOLE, MA. 02081

SCALE: 1/4"=1"	DRAWN BY: MRR	CHECKED BY: MCM
	DATE: 2/10/06	DATE 2/23/06

COSMEC FABRIC PAD BEARING

CUSTOMER	S.O. NUMBER	DRAWING NUMBER	REV.
A. L. ST. ONGE	60506	4670	

06566

Highway Safety Corporation

Glastonbury, CT

Welding Procedure Specification

Material specification: ASTM A500 Gr B
Welding process: Shielded Metal Arc Welding (SMAW)
Manual, semi-automatic, or automatic: Manual
Position of welding: Flat (1G)
Filler metal specification: AWS A5.1
Filler metal classification: ER7018
Electrode and manufacturer: Lincoln Electric Jet LH 78 MR
Flux and manufacturer: N/A
Shielding gas: N/A Flow rate: N/A
Single or multiple pass: Multiple
Single or multiple arc: Single
Welding current: AC
Polarity: N/A
Welding progression: Stringers
Root treatment: None
Preheat and interpass temperature: 50ºF (min)
Postheat treatment: None
Electrode extension: N/A

WELDING PROCEDURE

Weld size	Pass no.	Electrode size	Welding parameters Amperes	Welding parameters Volts	Travel speed	Joint detail
	ALL	5/32"	150 A to 220 A		VARIES	B-U2a 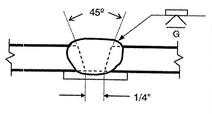

VTRANS RECEIVED JUL 03 2006

CK'D BY ____ OK'D BY JLC
RESUBMIT ____ APPROVED ✓
BY ____ DATE 7-3-06

This procedure may vary due to fabrication sequence, fit-up, pass size, etc. within the limitation of variables given in section 5 of latest edition AWS D1.1

WPS no. W-1540a
Revision no. 0
Supporting PQR no. Pre-Qualified
Project Name Morristown, Vermont

Fabricator: Highway Safety Corporation
Authorized by: Paul Radice
Date: 5/18/06
Project Number: BRZ 1446 (15)

AWS QC 1 PAUL A. RADICE 96076221 CWI

066 brwld

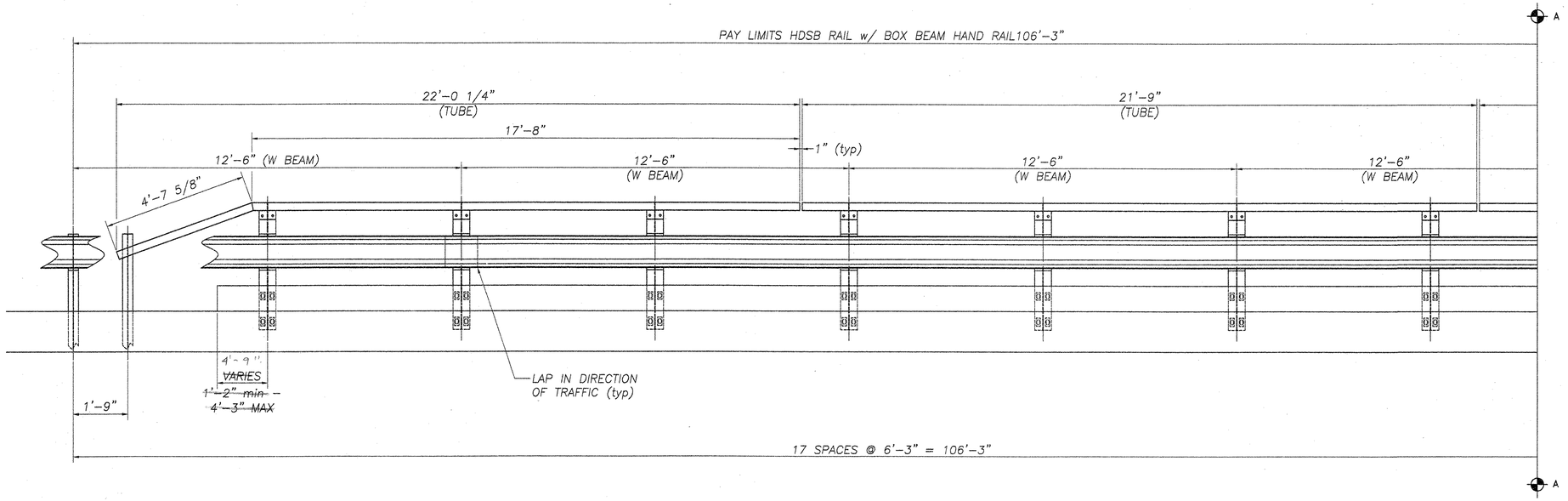

BILL OF MATERIAL				
Qty.	Description	Size/Shape	Length	Material
	POST			
32	fascia mounted post	W8 x 24	4'-1"	A572 gr 345
32	steel blockout	W8 x 24	14"	A572 gr 345
128	hex bolt w/ 2 flat washers & hex nut	5/8"	2"	A307
28	post bolt w/ flat washer & hex nut	5/8"	2"	A307
4	post bolt w/ flat washer & hex nut	5/8"	10"	A307
32	hand rail attachment angle	L5"x3 1/2"x3/8"	6 1/2"	A36
64	hex bolt w/ 2 flat washers & hex nut	5/8"	2"	A307
4	driven post	W6 x 8.5	6'-0"	A36
	W BEAM			
18	w beam rail	6'-3"	12'-6"	M180 b2
144	w beam splice bolt w/ DR nut	5/8"	1 1/4"	A307
	HAND RAIL			
2	hand rail tube w/ drop end	TS 6"x3"x1/4"	22' 0-1/4"	A500 gr B
2	hand rail tube	TS 6"x3"x1/4"	21'-9"	A500 gr B
2	hand rail tube	TS 6"x3"x1/4"	21'-10"	A500 gr B
2	hand rail tube	TS 6"x3"x1/4"	21'-9"	A500 gr B
2	hand rail tube w/ drop end	TS 6"x3"x1/4"	15' 9-1/4"	A500 gr B
16	splice bar	PL 3/4" x 5"	2'-7"	A36
64	hex bolt w/ flat washer & heavy hex nut	3/4"	4 1/2"	A307
	ANCHORS (by others)			
64	anchor u bolt w/ 4 hex nuts and 2 flat washers	1" x 10"	12"	A449
128	plate washer	PL 2 3/16"x1/4"	5"	A36

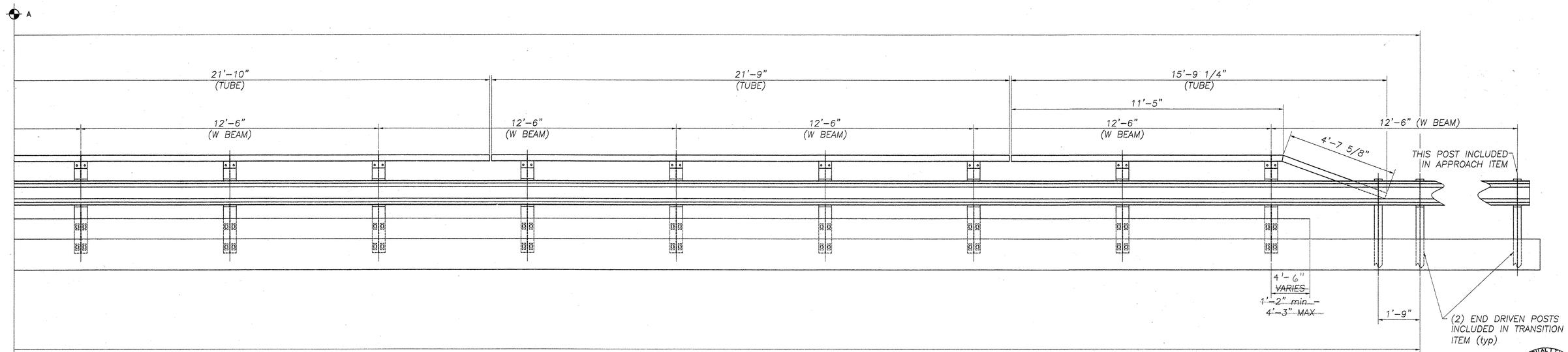

WESTERN ELEVATION LOOKING AT RAIL FROM ℄ OF ROAD
(EAST ELEVATION SIMILAR)
TOTAL PAY LIMIT = 212'-6"

REVISIONS		
No.	Remarks	Date
0	Initial submittal	5/18/06

RECEIVED
CK'D BY Kmm OK'D BY
JUL 03 2006
RESUBMIT APPROVED As Noted
BY DATE

HIGHWAY SAFETY CORP.
GLASTONBURY, CT

ITEM # 525.43 FASCIA MOUNTED HDSB
w/ HAND RAILING
PROJECT # BRZ 1446 (15)
TOWN OF MORRISTOWN
ROUTE NO: "B" STREET BRIDGE NO: 53

DRAWN	C CRAMER
CHECKED	Parks
DATE	4/12/06
SCALE	NTS
HSC REFERENCE NO.	1540
SIZE	D
REVISION	0
SHEET NO.	1 of 2
GENERAL CONTRACTOR	
SUB CONTRACTOR	F.R. LAFAYETTE INC.

067 br

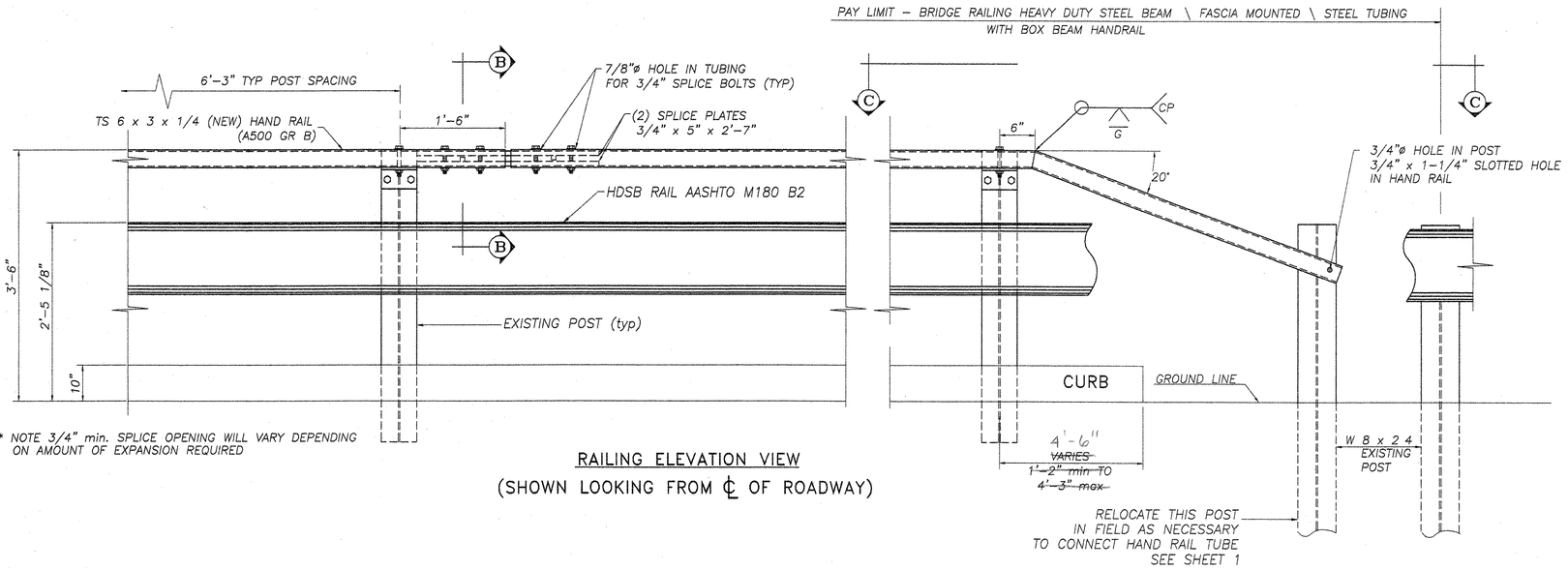

* NOTE 3/4" min. SPLICE OPENING WILL VARY DEPENDING ON AMOUNT OF EXPANSION REQUIRED

RAILING ELEVATION VIEW
(SHOWN LOOKING FROM ℄ OF ROADWAY)

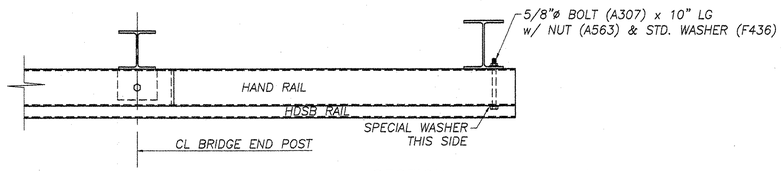

C SECTION

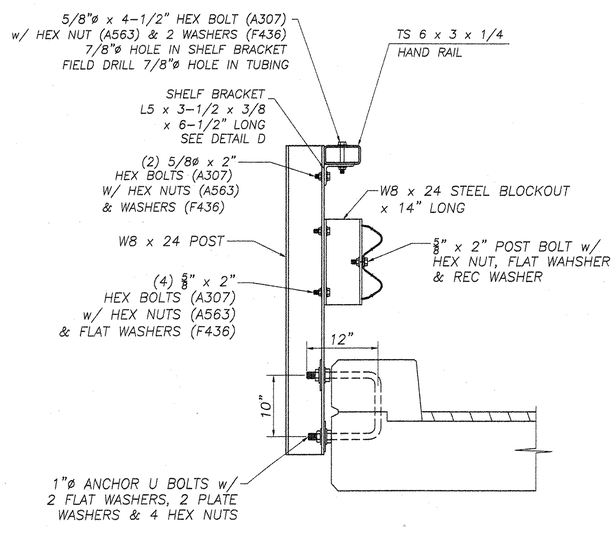

FASCIA MOUNTED POST WITH CURB

W 8 x 24 (A572 GR 50)

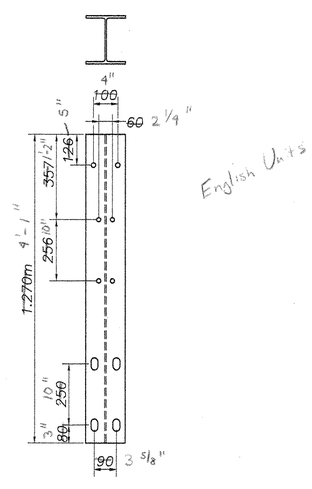

English Units

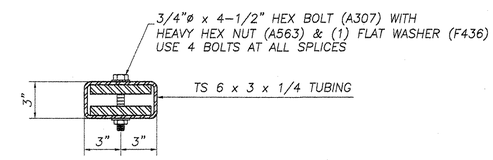

B PARTIAL SECTION
SHOWING HAND RAIL TUBE & SPLICE BARS

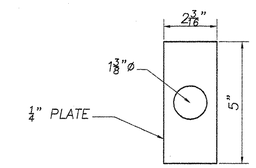

PLATE WASHER DETAIL

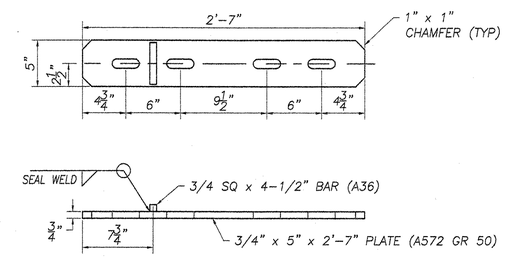

HAND RAIL SPLICE BAR DETAIL

REVISIONS		
No.	Remarks	Date
0	Initial submittal	5/18/06

RECEIVED
CK'D BY KMH OK'D BY
JUL 0 3 2006
RESUBMIT ____ APPROVED As Noted
BY DATE

HIGHWAY SAFETY CORP.
GLASTONBURY, CT

ITEM # 525.43 FASCIA MOUNTED HDSB w/ HAND RAILING
PROJECT # BRZ 1446 (15)
TOWN OF MORRISTOWN
ROUTE NO: "B" STREET BRIDGE NO: 53

DRAWN	C CRAMER
CHECKED	
DATE	5/17/06
SCALE	NONE
HSC REFERENCE NO.	1258
GENERAL CONTRACTOR	
SIZE	D
REVISION	0
SUB CONTRACTOR	F.R. LAFAYETTE, INC.
SHEET NO.	2 of 2

068br