Sheet No.

1	Title Page
2	Quantity Sheet
3	Jacking Details
4	New Portal
5.	Shoes & Masonry Plates
6.	Abutment Details
7.	Wingwall Details
8.	Std. Sheet E-3 Nov. 7, 1973 R
9.	SCB-D1-71 Jan. 28, 1974 R

STATE OF VERMONT
DEPARTMENT OF HIGHWAYS

PROPOSED IMPROVEMENT

BRIDGE PROJECT

TOWN OF MORRISTOWN

COUNTY OF LAMOILLE

ROUTE No VT. 100 BRIDGE No. 215

PROJECT LOCATION: Beginning at a point approximately 480 ft. from the intersection of Portland St. and Brooklyn St. and extending westerly 133'± on Vt. 100.

PROJECT DESCRIPTION: Project to consist of painting the superstructure, replacing the truss portals and repairing the abutments and bearing devices as detailed on these plans.

LENGTH OF STRUCTURE: 125' FEET

LENGTH OF PARTICIPATING ROADWAY: FEET

LENGTH OF NON PARTICIPATING ROADWAY: FEET

LENGTH OF PROJECT: 133' FEET

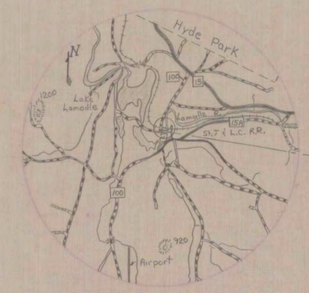

LOCATION MAP
(TRACED FROM GREAT MAP)

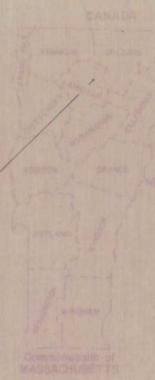

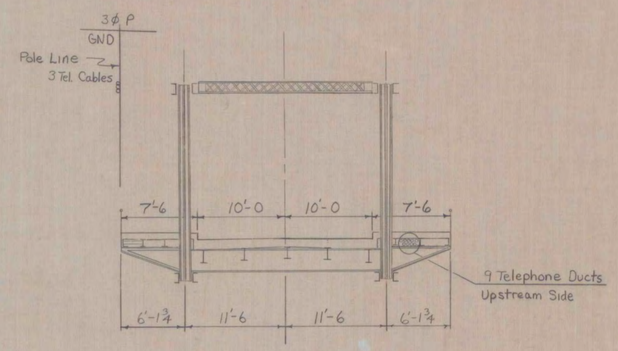

TYPICAL BRIDGE SECTION

GENERAL NOTES:

See Sheet 3

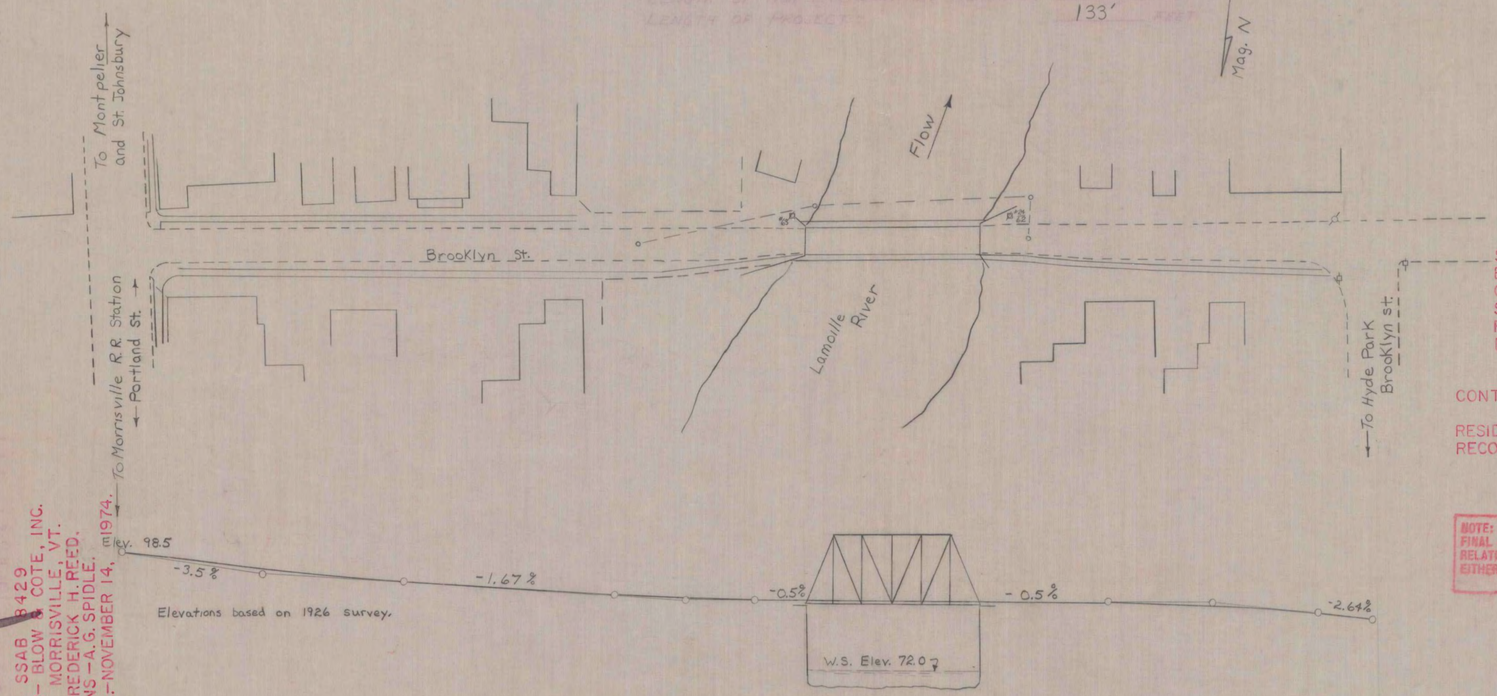

MORRISTOWN SSAB 8429.
RECORD PLANS
MATERIALS

SUBBASE OF GRAVEL—GODFREY'S PIT —MORRISVILLE, VT.
BITUMINOUS CONCRETE PAVEMENT—L.M. PIKE & SON, INC.—LACONIA, N.H.
CONCRETE CLASS B—HUTCH CONCRETE CONTRACTING CORP.-E. MONTPELIER, VT.
STRUCTURAL STEEL—VERMONT STRUCTURAL STEEL CORP.—BURLINGTON, VT.
REINFORCING STEEL—PIONEER VALLEY STEEL CO., INC.— GREENFIELD, MA.
BRIDGE PAINT—CADILAC PAINT & VARNISH CO.— BOSTON, MA.

CONTRACTOR—BLOW & COTE, INC.
MORRISVILLE, VT.
RESIDENT ENGINEER—FREDERICK H. REED.
RECORD PLANS—A.G. SPIDLE.

CONTRACT-DATED-AUGUST 9, 1974.
STARTED-AUGUST 14, 1974.
COMPLETED—NOVEMBER 14, 1974.
ACCEPTED —NOVEMBER 14, 1974.

NOTE: ANY FURTHER INFORMATION CONCERNING FINAL QUANTITIES, AMOUNTS OR OTHER DETAILS RELATIVE TO THIS PROJECT MAY BE FOUND IN EITHER THE FIELD BOOKS OR THE ESTIMATE FILE.

SUBMITTED BY UNDER THE STATE SUPERVISION
APPROVED BY
E. H. Stickney 6/26/74

MORRISTOWN SSAB 8429
CONTRACTOR—BLOW & COTE, INC.
MORRISVILLE, VT.
RES. ENG.—FREDERICK H. REED.
RECORD PLANS—A.G. SPIDLE.
CONST. COMPL.—NOVEMBER 14, 1974.

EARTHWORK

V.C.	% GRD	STATION	GRADES ELEVATION ON TAN.	GRADES ELEVATION ON V.C.	CORR. V.C.	DIST.	AREA	CU. YDS.	AREA	CU. YDS.	AREA	CU. YDS.	AREA	CU. YDS.

BRIDGE QUANTITY SHEET

STATE OF VERMONT
DEPARTMENT OF HIGHWAYS
BRIDGE DIVISION

NO.	ITEM	UNIT	QUANTITY BREAKDOWN	TOTAL	FINAL
202.30	Partial Removal of Structure	Ea.	1	1	1
202.35	Removal of Existing Concrete & Masonry	C.Y.	37	37	50.18
202.36	Removal of Existing Concrete & Masonry	S.Y.	50	50	70.5
204.25	Structure Excavation	C.Y.	20	20	19.4
301.15	Sub base of Gravel	C.Y.	20	20	19
501.25	Concrete Class B	C.Y.	60	60	90.58
502.10	Shoring Superstructure	L.S.	1	1	1
506.93	Structural Steel A 36	LB.	13,400	13,400	12,120
507.15	Reinforcing Steel Grade 40	LB.	5340	5340	8,124
507.16	Drilling & Grouting Dowels	L.F.	315	315	429
513.25	Painting, Hand Tool Cleaning	L.S.	1	1	1
637.10	Maintenance of Traffic for Bridge Projects	L.S.	1	1	1
406.25	Bituminous Concrete Pavement	Ton	2	2	14

BRIDGE (S) AT STATION (S) _____
LOCATION (S) _____

Prepared by: J.R. Guilmette
Checked by: E.L. Oatley 3/14
SUPERVISOR: J. Wood

MORRISTOWN
BR ____ OF ____

PROJECT NO. SSAB 8429
SHEET NO. 2 OF 9

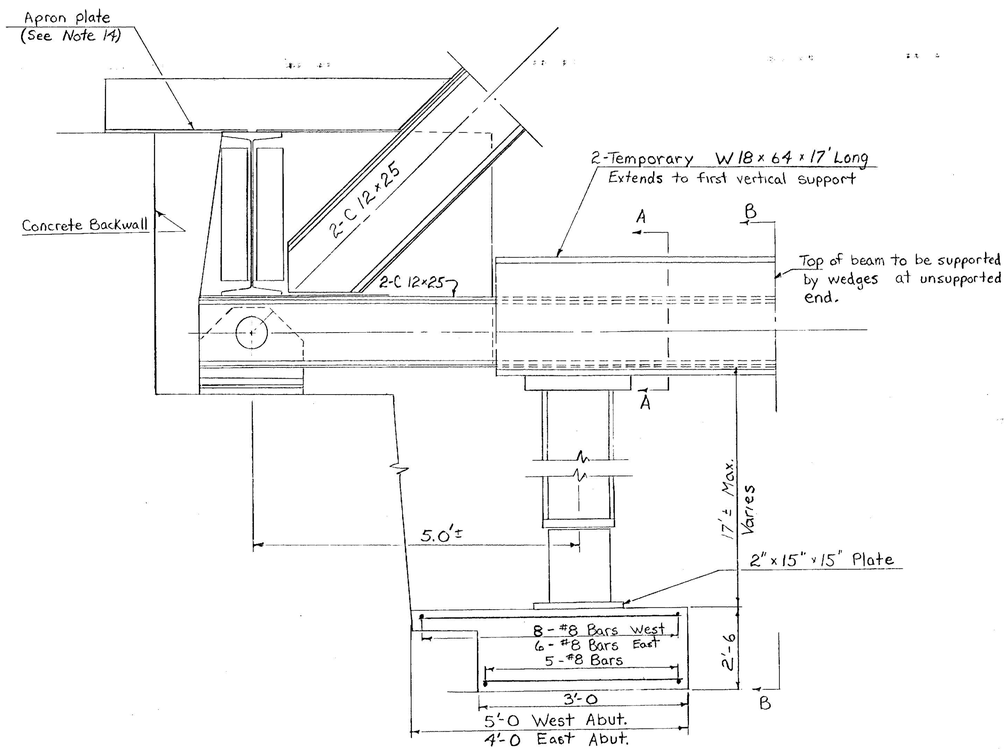

SIDE ELEVATION
N.T.S.

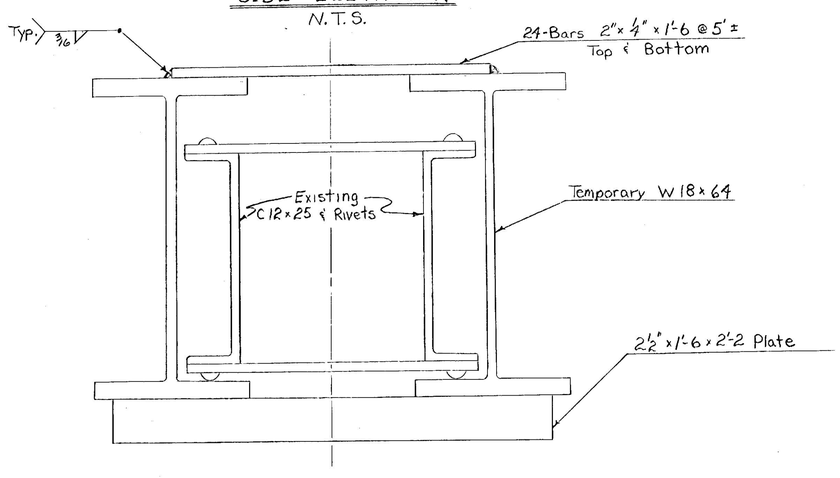

SECTION A-A
Scale : ¼" = 1"

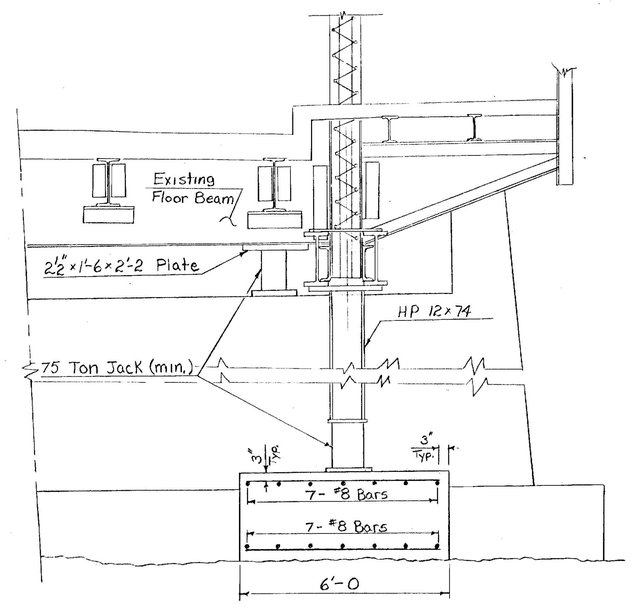

SECTION B-B
Scale : ½" = 1'-0

Jacking Force Required
Ea. Jack

Dead Load	85,000 lb.
Live Load + Impact	25,000 lb.
Total =	110,000 lb

General Notes

1. For additional General Notes see Standard Sheet SCB-DI-71.
2. Costs of all items, labor, and incidentals required for jacking, are included in Item 502.10, Shoring Superstructure.
3. The contractor may choose an alternate method of jacking the truss. Whatever method of jacking is selected the contractor must submit detailed plans of the proposed jacking procedure and must receive written approval of these plans from the Bridge Division before any jacking takes place.
4. If the suggested method of jacking is selected each corner of the truss may be jacked separately.
5. Each corner of the bridge shall be jacked sufficiently to insure that trusses are returned to their original elevation.
6. When jacking superstructure to repair bearings, use one pump per set of jacks to equalize pressure.
7. Bearing devices are to be removed, and cleaned as directed by the Engineer. Payment to be included under Item 513.25, Painting, Hand Tool Cleaning.
8. Bearing plate anchor bolts are to be replaced if damaged, bent or have stripped threads. Payment to be included under Item 506.93 Structural Steel.
9. Two-way traffic to be maintained in accordance with Section 637 of Vermont Specifications.
10. Structural Steel shall be cleaned in accordance with Section 513.03 b of Vermont Specifications.
11. Jacking Footings are designed at a bearing capacity of 5 Tons/S.F.
12. The volume of concrete used in the jacking footings shall be included in bid price for Shoring Superstructure, Item 502.10.
13. Contractor shall contact Telephone Co. before jacking of bridge to obtain necessary information about the 9 telephone ducts under sidewalk on upstream side of bridge.
14. Apron plates shall be supported during backwall repair and jacking operation.

STATE OF VERMONT
DEPARTMENT OF HIGHWAYS

TOWN OF MORRISTOWN	Bridge No. 215
	Log Sta. 295+02
HIGHWAY NO. VT. 100	Surv. Sta.
BROOKLYN STREET OVER LAMOILLE RIVER	
JACKING DETAILS	
Designed by J.R. Guilmette	Drawn by J.R. Guilmette
Checked by R.L. Oatley, date 3/74	Bridge Design Supervisor J. Wood date 3/74
PROJECT MORRISTOWN	PROJECT NO. SSAB 8429
Bridge Sheet No.	Sheet 3 of 9

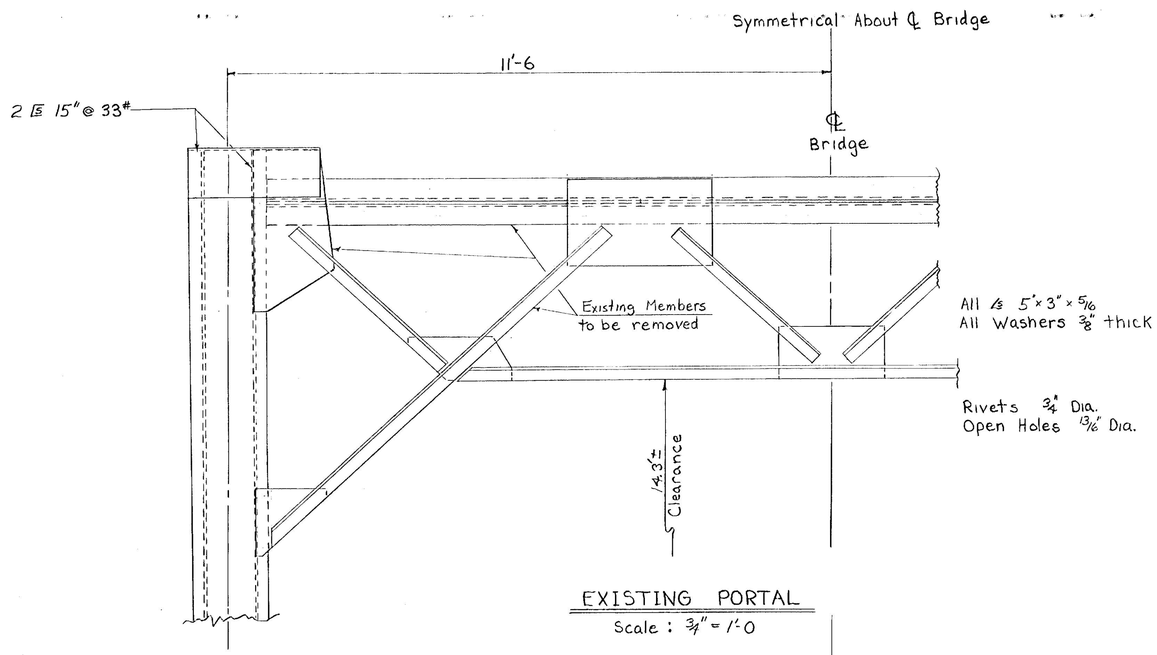

EXISTING PORTAL

Scale : 3/4" = 1'-0

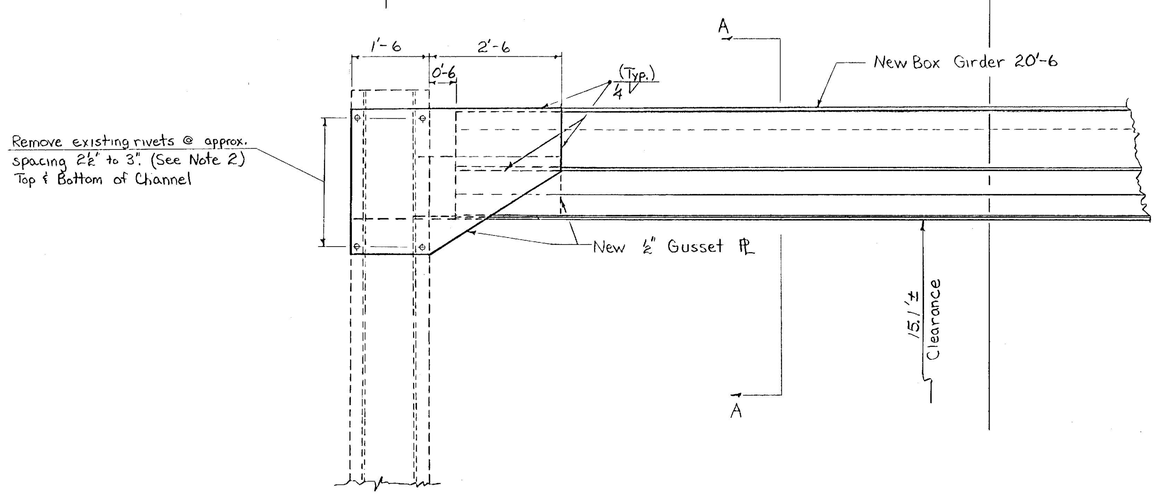

REVISED PORTAL

Scale : 3/4" = 1'-0

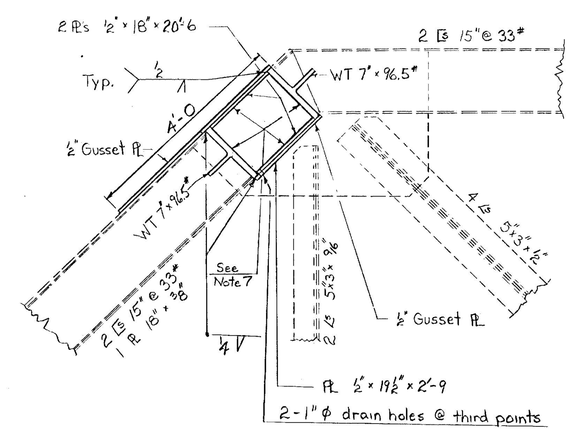

SECTION A-A

Scale: 3/4" = 1'-0

NOTES

1. Remove the existing portals and gusset plates.
2. Use existing 3/4" rivet holes in end post channels to bolt new 1/2" gusset plates using 3/4" ϕ A325 H.S. bolts Holes in gusset plate are to be field drilled.
3. Existing portals shall not be removed until structure has been jacked and bearings replaced.
4. Steel-A36 shall be painted in accordance with Section 513 of Vermont Specifications. Payment to be included under Item 513.25 Painting, Hand Tool Cleaning.
5. Details shown are typical for each end of structure.
6. Payment for removal of existing portals shall be included under Partial Removal of Structure, Item 202.30.
7. After fabrication, the portal assembly shall be painted 2' into the end sections.
8. The weight of field bolts, nuts and washers shall not be included as part of weight of the material to be measured for payment under Structural Steel, Item 506.93.
9. Existing portals shall not be removed until new portal assemblies are ready to be placed. Only one portal shall be removed at one time.

List of New Material

Item	No. of Pieces
WT 7" x 96.5# x 20'-6	4
PL 1/2" x 18" x 20'-6	4
PL 1/2" x 48" x 4'-0	8
PL 1/2" x 19 1/2" x 2'-9	4

Approx. Wgt. New Steel = 13,400 lb.

230 - 3/4" ϕ x 3" A325 H.S. Bolts required (See Note 8)

STATE OF VERMONT
DEPARTMENT OF HIGHWAYS

TOWN OF MORRISTOWN	Bridge No. 215
HIGHWAY NO. VT. 100	Log Sta. 295 + 02 / Surv. Sta.
BROOKLYN STREET OVER LAMOILLE RIVER	
NEW PORTAL	
Designed by R. Oatley	Drawn by J. R. Guilmette
Checked by R.L. Oatley date 3/94	Bridge Design Supervisor J. Wood date 3/94
PROJECT MORRISTOWN	PROJECT NO. SSAB 8429
Bridge Sheet No.	Sheet 4 of 9

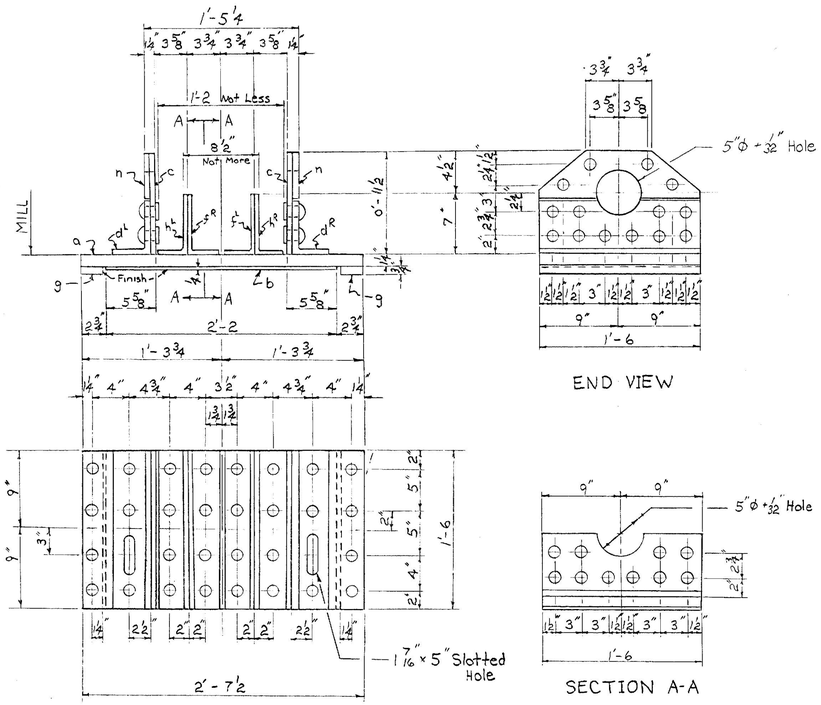

SHOE - ES1 MATERIAL

1 - PL 18" x 1¼ x 2'-7½" - a
1 Bronze PL 18" x ¼" (fin) x 2'-2 - b
2 PL 18" x 5/8" x 11½" c (MIE)
2 ∠s 6" x 4" x 5/8" x 1'-6 - d_L^R
2 ∠s 7" x 3½" x ½" x 1'-6 - f_L^R
2 Bars 2½" (fin) x ¾" x 1'-6 - g
2 ∠s 7" x 3½" x ½" x 1'-6 - h_L^R
2 Fills 5" x 5/8" x 1'-6 - n

SHOE - ES1
EAST ABUTMENT

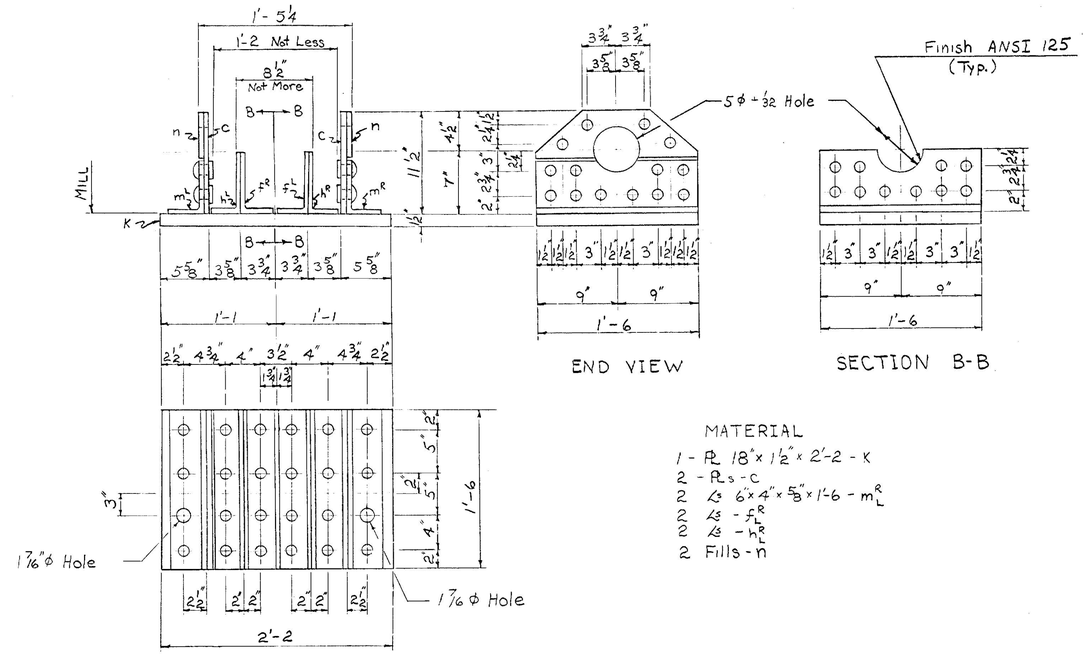

MATERIAL

1 - PL 18" x 1½" x 2'-2 - k
2 - PLs - c
2 ∠s 6" x 4" x 5/8" x 1'-6 - m_L^R
2 ∠s - f_L^R
2 ∠s - h_L^R
2 Fills - n

SHOE - ES2
WEST ABUTMENT

NOTES

1. This sheet is intended for reference only.
2. Existing bearings are to be disassembled and cleaned. Any parts which are deteriorated beyond repair shall be replaced in kind as directed by the Engineer. Payment for any replacements shall be included under Item 506.93, Structural Steel.
3. Machined surfaces to receive one shop coat of White Lead and Tallow. Payment to be included under Item 513.25 Painting, Hand Tool Cleaning.
4. Detailing and material list has been traced from original contract plans
5. After bearings are cleaned a graphite grease lubricant shall be added to finished surface of bronze plate. Payment for disassembling, cleaning and greasing existing bearings shall be considered subsidiary to Item 513.25 Painting, Hand Tool Cleaning
6. Minimum of 4 new 1⅛"Ø x 2'-6 swedge bolts will be required. Payment to be included in quantity shown for Item 506.93 Structural Steel.
7. Existing bearing pins shall be removed when bearings are cleaned.

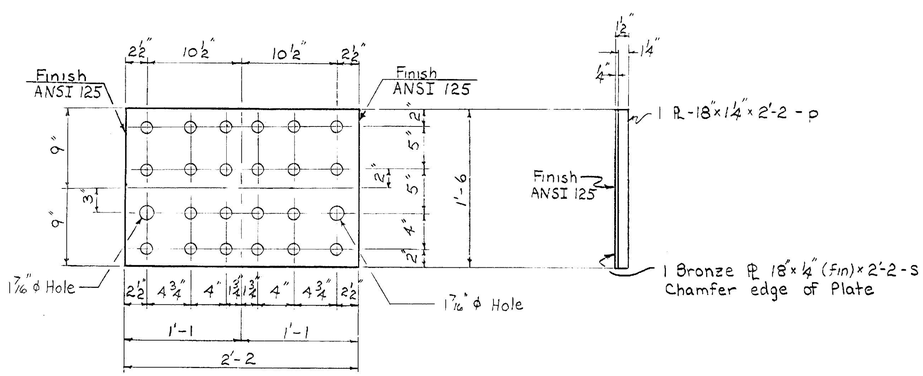

MASONRY PLATE MP1
EAST ABUTMENT

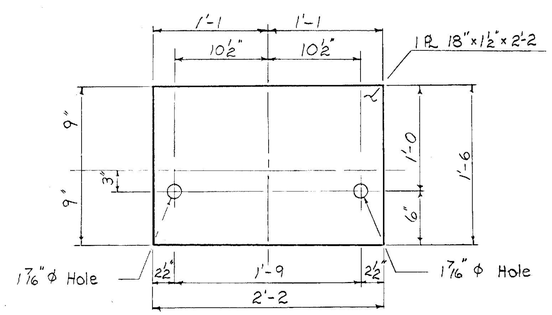

MASONRY PLATE - MP2
WEST ABUTMENT

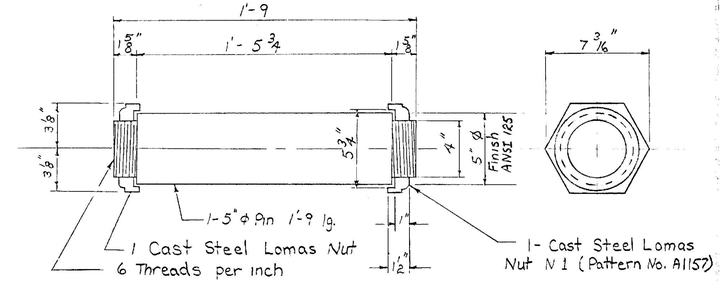

PIN P1

Rivets	¾" Ø
Holes	13/16" Ø unless noted
Ream	None
Milling	As noted

STATE OF VERMONT
DEPARTMENT OF HIGHWAYS

TOWN OF MORRISTOWN	Bridge No. 215
HIGHWAY NO. VT. 100	Log Sta. 295+02
	Surv. Sta.
BROOKLYN STREET OVER LAMOILLE RIVER	
SHOES AND MASONRY PLATES	
Designed by ———	Drawn by J.R. Guilmette
Checked by R.L. Oatley date 3/74	Bridge Design Supervisor J. Wood date 3/74
PROJECT MORRISTOWN	PROJECT NO. SSAB 8429
Bridge Sheet No.	Sheet 5 of 9

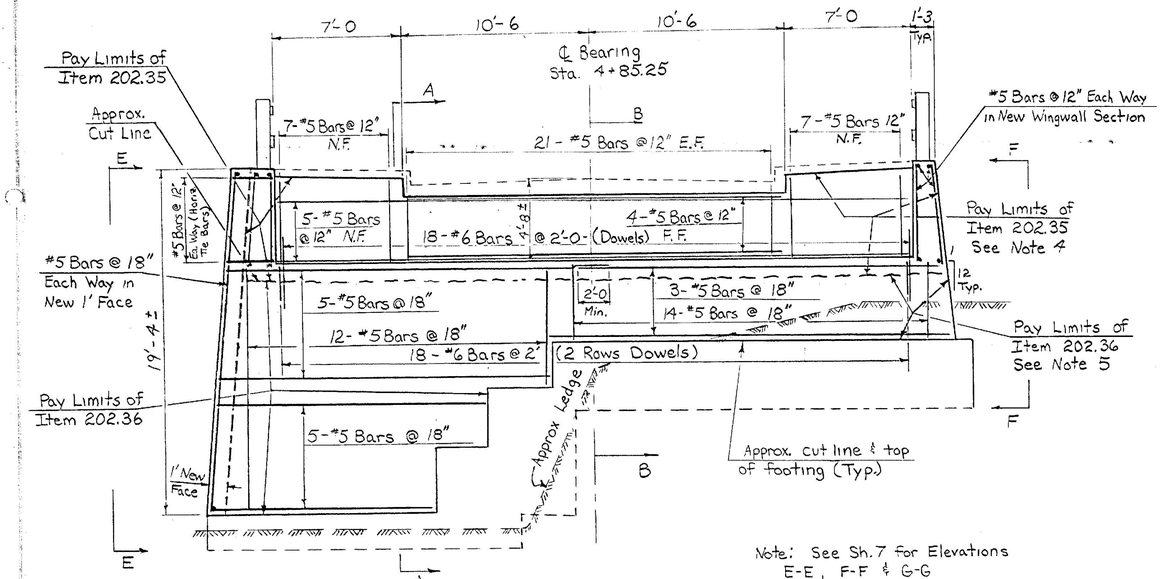

EAST ABUTMENT
Scale: 1/4" = 1'-0

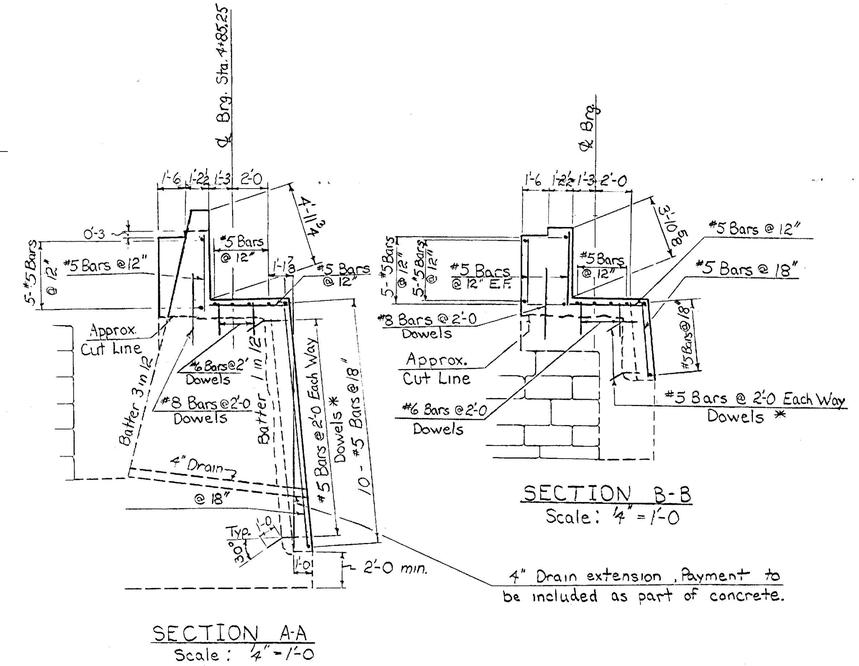

SECTION A-A
Scale: 1/4" = 1'-0

SECTION B-B
Scale: 1/4" = 1'-0

NOTES

1. Top of bridge seats shall be sloped 1/4"/ft. except level under bearings.
2. Deteriorated concrete shall be removed to solid concrete which shall be determined by hand use of a 6 lb hammer and chisel or as directed by the Engineer.
3. Existing reinforcing steel is to be cleaned and retained where practicable.
4. The volume of concrete to be removed in backwalls, top of bridge seats, and top of specified wingwalls shall be paid for on a cubic yard basis as Removal of Existing Concrete & Masonry, Item 202.35.
5. The face of the abutment and wingwalls which are to receive an additional 1 foot face thickness shall be cleaned to solid Concrete (See Note 2) and paid for on a square yard basis as Removal of Existing Concrete and Masonry, Item 202.36.
6. Concrete shall be removed to a minimum depth of 2'-0 and approx 2'-6 each side of the ℄ of truss in bearing area. All other depths of removal along abutment shall be determined by solid concrete. Payment to be included under Removal of Existing Concrete & Masonry, Item. 202.35.
7. Face of existing concrete shall be water soaked for 24 hours prior to placing new concrete against existing.
8. Dowels to be grouted shall be drilled 12" into existing concrete or masonry and paid for under Drilling and Grouting Dowels, Item 507.16.

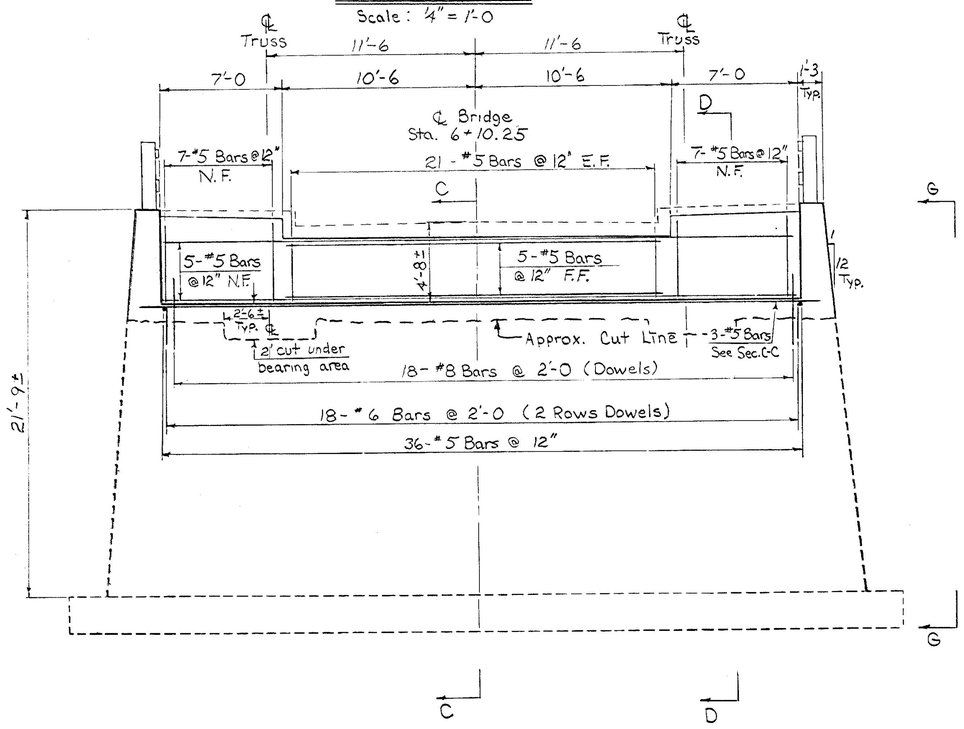

WEST ABUTMENT
Scale: 1/4" = 1'-0

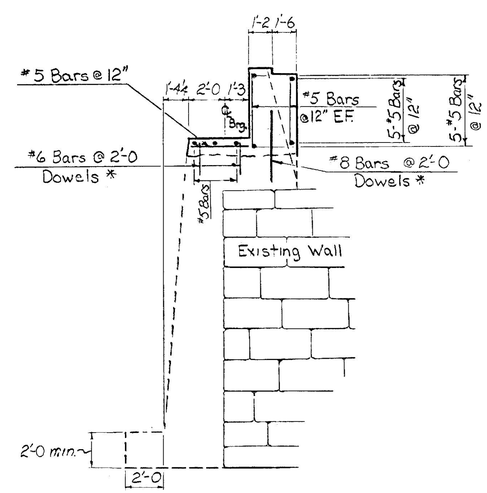

SECTION C-C
Scale: 1/4" = 1'-0

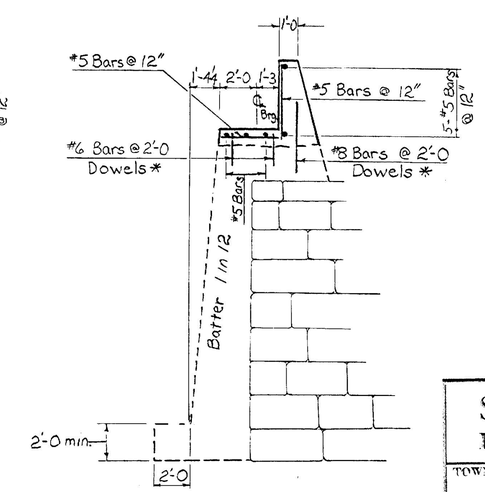

SECTION D D
Scale: 1/4" = 1'-0

* Grout all dowels into existing concrete.

STATE OF VERMONT
DEPARTMENT OF HIGHWAYS

TOWN OF MORRISTOWN	Bridge No. 215
	Log Sta. 295+02
HIGHWAY NO. VT. 100	Surv. Sta.
BROOKLYN STREET OVER LAMOILLE RIVER	
ABUTMENT DETAILS	
Designed by J.R. Guilmette	Drawn by J.R. Guilmette
Checked by E.L. Oatley date 3/74	Bridge Design Supervisor J. Wood date 3/74
PROJECT MORRISTOWN	PROJECT NO. SSAB 8429
Bridge Sheet No.	Sheet 6 of 9

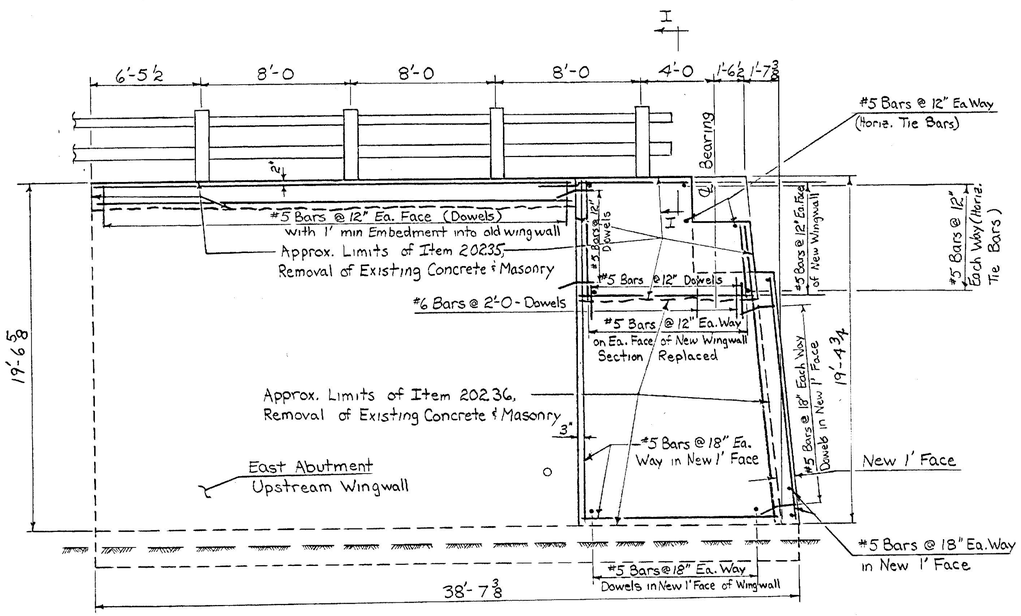

ELEVATION E-E
Scale: ¼" = 1'-0

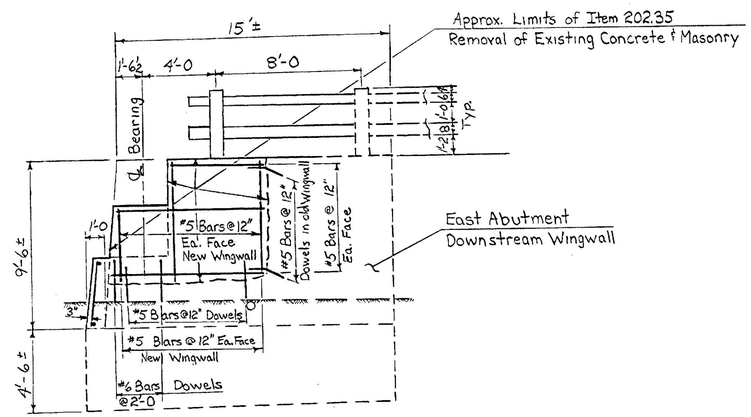

ELEVATION F-F
Scale: ¼" = 1'-0

Note: For Location of Elevations See Sheet 6.

NOTES

1. All dimensions on these plans shall be verified in the field.
2. All necessary removal and the resetting of existing plank guard rail shall be included in the bid price for Removal of Existing Concrete & Masonry, Item 202.35.
3. All dowels shall have a minimum depth of embedment of 1'-0 into existing solid concrete.
4. Dowels shall be used as specified in all areas where new concrete is bonded to existing solid concrete.
5. All reinforcing steel in new wingwall and adjacent new 1' face shall be tied together by horizontal #5 bars @ 12" each way.
6. All concrete in new face of abutment and wingwalls shall be Concrete Class B.
7. Minimum concrete cover shall be 2" or as noted on these plans.
8. New guard rail posts shall be Concrete Class A. Payment shall be included under Concrete, Class B, Item 501.25.
9. The contractor shall use care in removal and storage of the existing plank guard rail and wire fencing. The contractor shall be responsible for replacement in kind without pay for any damaged or lost plank and wire fencing.

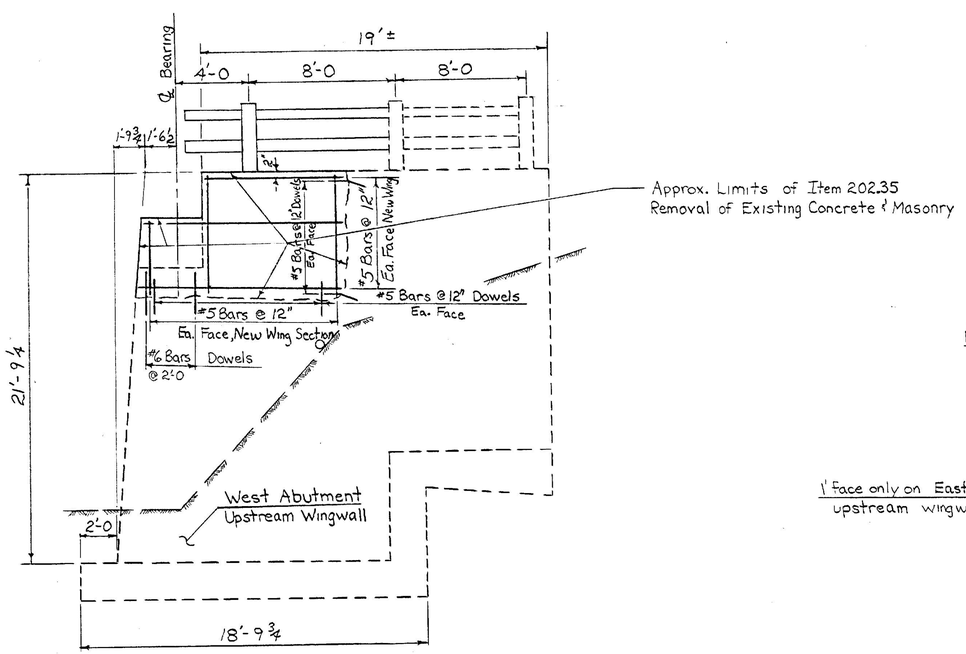

ELEVATION G-G
Scale: ¼" = 1'-0

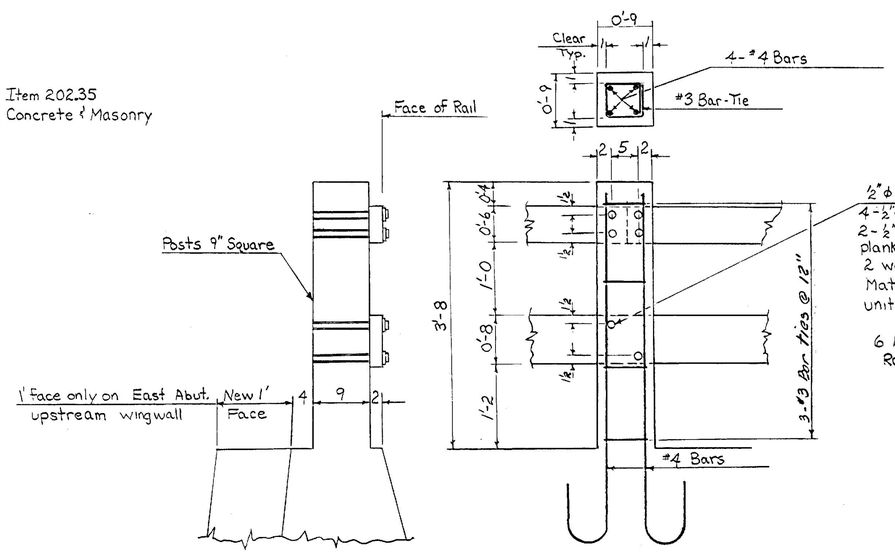

6 New Concrete Guard Rail Posts required.

SECTION I-I
DETAILS of CONCRETE POSTS
Scale: 1" = 1'-0

REINFORCING STEEL

(ASTM A 615, Grade 40)

Size	Length		
3	80	ft	Field Cut
4	150	ft.	Field Cut
5	3020	ft.	Field Cut
6	300	ft.	Field Cut
8	600	ft	Field Cut

Field bend where necessary.

STATE OF VERMONT
DEPARTMENT OF HIGHWAYS

TOWN OF MORRISTOWN	Bridge No. 215
	Log Sta. 295+02
HIGHWAY NO. VT. 100	Surv. Sta.
BROOKLYN STREET over LAMOILLE RIVER	
WINGWALL DETAILS	
Designed by J.R. Guilmette	Drawn by J.R. Guilmette
Checked by R.L. Oatley date 6/74	Bridge Design Supervisor J. Wood date 6/74
PROJECT MORRISTOWN	PROJECT NO. SSAB 8429
Bridge Sheet No.	Sheet 7 of 9

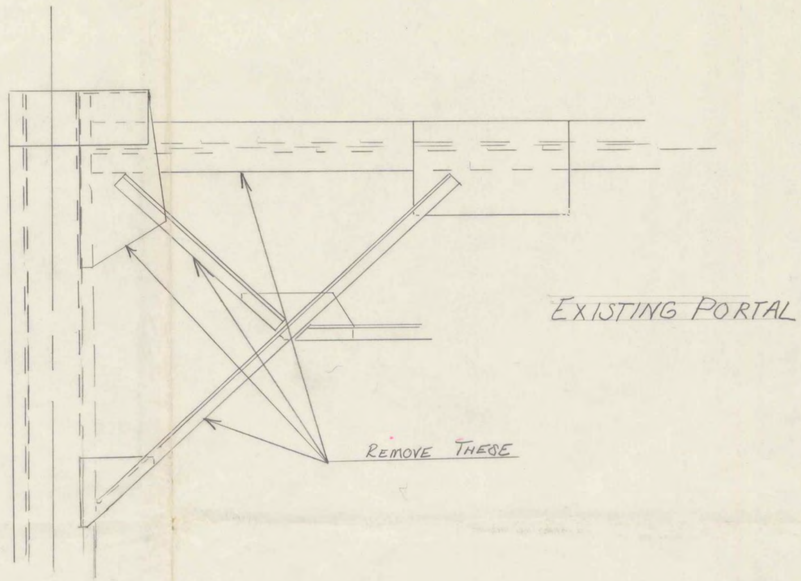

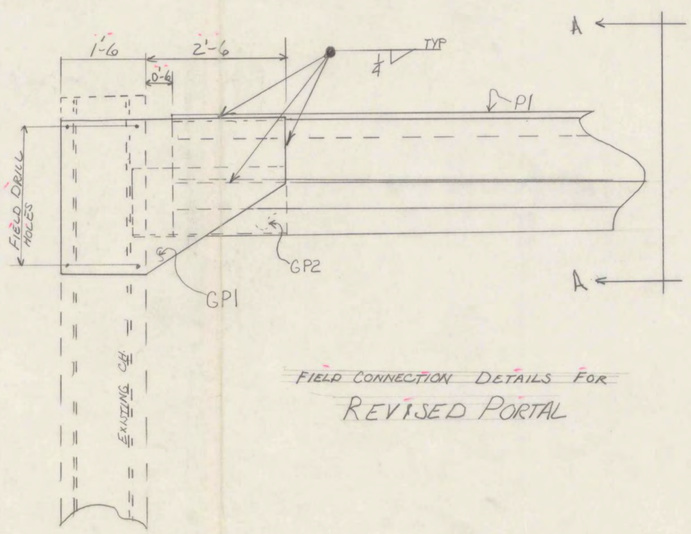

FIELD CONNECTION DETAILS FOR
REVISED PORTAL

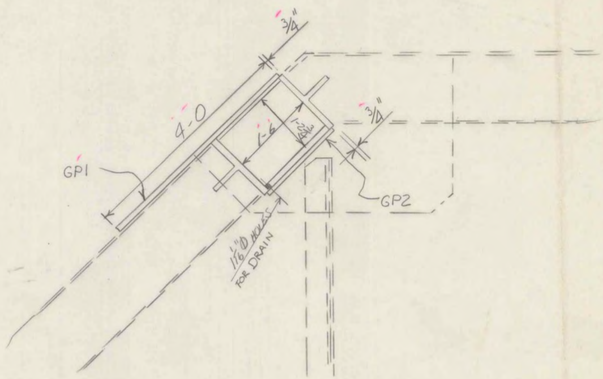

SECTION AA

THESE DWG'S TO BE USE IN CONJ. WITH
VT. STATE HWY. DWG'S.

VERMONT STRUCTURAL STEEL CORPORATION
BURLINGTON, VT.

PROJ. SSAB 8429

		DATE
DRAWN BY	LFG	8-15
CK'D BY	R	8-19
HOLES		
BOLTS		
PAINT		

PROJECT BROOKLYN ST. BRIDGE
LOCATION MORRISTOWN, VT., RTE. 100
CUSTOMER BLOW & COTE INC.
MORRISVILLE VT.
ARCHITECT STATE OF VT.
JOB NO. 74-2597 SHEET NO. E1

PRINT RECORD

NO.	FOR	DATE
5	APP	8-19
3	FIELD	8-28

1500 10-72 QCP

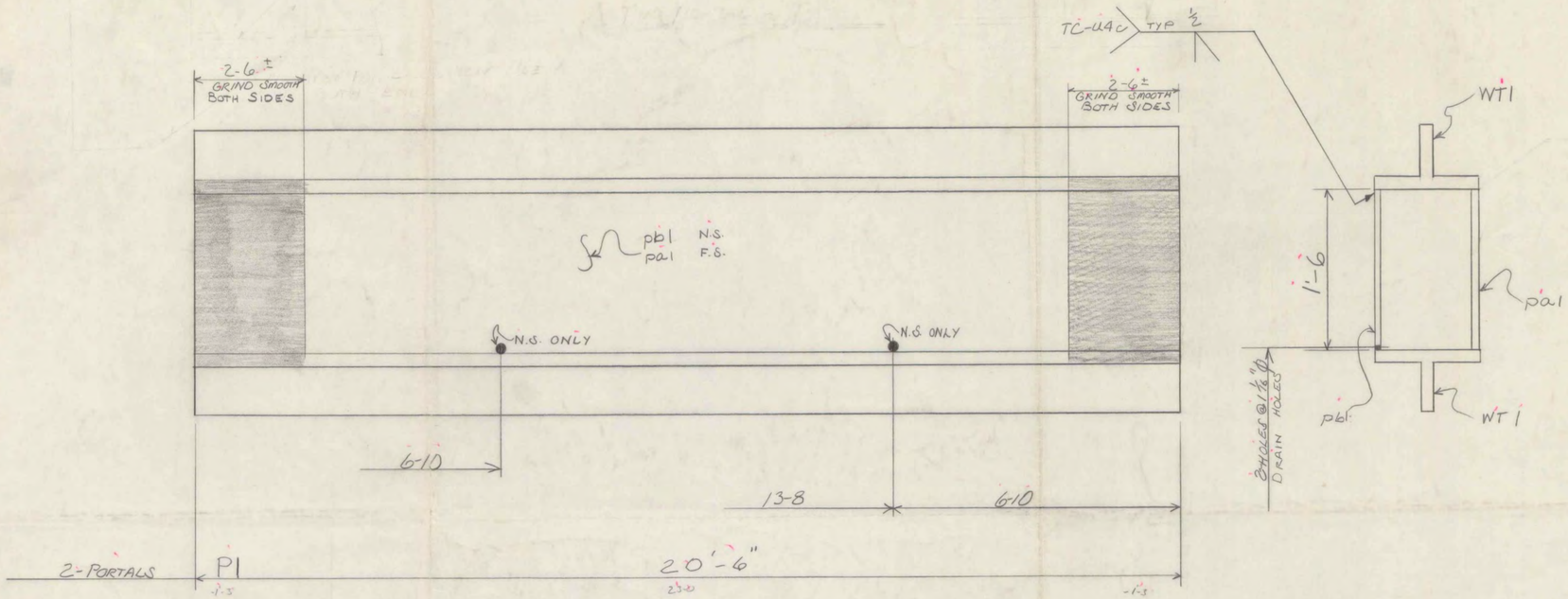

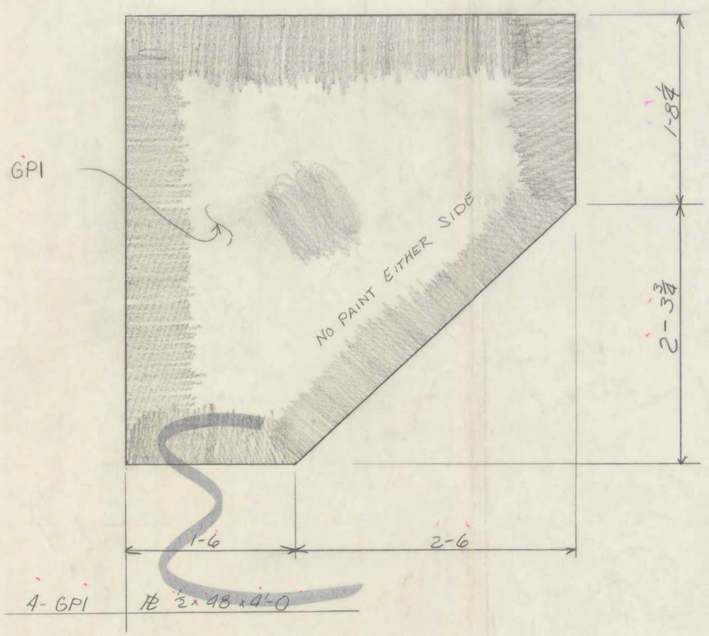

SHOP NOTE:
PAINT ALL AROUND PORTALS AND ALSO 2 FT. INTO THE ENDS ON THE INSIDE
△ DO NOT PAINT SHADED AREAS

BILL OF MATERIAL

NO. PIECES	MARK	DESCRIPTION	LENGTH FT.	LENGTH IN.		WEIGHT

JOB NO. SHEET NO.

BILL OF MATERIAL

A-36

NO. PIECES	MARK	DESCRIPTION	LENGTH FT.	LENGTH IN.		WEIGHT
		TWO PORTALS				
4	WT1	WT 7x96.5 x	20	6	(1) N 14x93 @ 49' USSS 40370	7913
2	pa1	PL ½ x 18 x	20	6		1255
2	pb1	PL do	20	6	RES 1 @ 48" x 10'	1255
NO PAINT 4	GP1	PL ½ x 48 x	4	0	NO PAINT	1306
NO PAINT 4	GP2	PL ½ x 19½ x	2	9	PLAIN do	365
						12,094
		FIELD MAT'L				
230		¾" Ø A325 BOLTS	0	3	STK. (RES)	—
230		¾" Ø HEX NUT			44 27	—
230		¾" Ø HARD WASH.				—
		ORDER COMPLETE				

VERMONT STRUCTURAL STEEL CORPORATION
BURLINGTON, VT.

△ REV PER APP 8-28 LFG PROJ. # SSAB 8429

		DATE
DRAWN BY	LFG	8-19
OK'D BY	R	8-19

HOLES 1 1/16" Ø
BOLTS NONE
PAINT BASIC - LEAD - SILICO - CHROMATE

PROJECT BROOKLYN STREET BRIDGE
LOCATION MORRISTOWN, VT., RTE 100
CUSTOMER BLOW & COTE INC. MORRISVILLE VT.
ARCHITECT STATE OF VT.
JOB NO. 74-2597 SHEET NO. ONE

PRINT RECORD NO.	FOR	DATE
5	APP	8-19
3 (1)	SHOP	8-28
2	VT. HWY FOR WT.	8-28
2	STATE	10/24

1500 3-74 QCP