STATE OF VERMONT
AGENCY OF TRANSPORTATION

PROPOSED IMPROVEMENT
BRIDGE PROJECT

COUNTY OF LAMOILLE
TOWN OF MORRISTOWN

ROUTE NO :VT RTE 15A, MAJOR COLLECTOR

BRIDGE NO :1

BRS 0240(3) PROJECT LOCATION : BEGINNING AT A POINT ON VT ROUTE 15A, IN THE TOWN OF MORRISTOWN APPROXIMATELY 0.27 MILES WESTERLY OF VT ROUTE 15 AND EXTENDING EASTERLY APPROXIMATELY 0.21 MILES ALONG VT ROUTE 15A

BRS 0240(3) PROJECT DESCRIPTION : REPLACEMENT OF TEMPORARY BRIDGE WITH A NEW CURVED GIRDER WITH CONCRETE DECK AND NECESSARY CHANNEL AND APPROACH WORK, AND REMOVAL OF EXISTING TEMPORARY BRIDGE AND APPROACHES.

LENGTH OF STRUCTURE : 222.66 FEET.
LENGTH OF ROADWAY : 902.34 FEET.
LENGTH OF PROJECT : 1,125.00 FEET.

STP HES 030-2(28) PROJECT LOCATION : BEGINNING AT POINT ON VT-15, FROM THE INTERSECTION OF VT-100 AND VT-15 IN THE TOWN OF MORRISTOWN PROCEED APPROXIMATELY 1.55 MILES EASTERLY ON VT ROUTE 15 AND EXTENDING EASTERLY 0.17 MILES ALONG VT ROUTE 15.

STP HES 030-2(28) PROJECT DESCRIPTION : THE WORK INCLUDES THE CONSTRUCTION OF A NEW INTERSECTION OF VT-15 AND VT-15A, INCLUDING ALL NECESSARY ROAD WORK AND REPLACEMENT OF AN EXISTING CATTLE PASS.

VT-15 LENGTH OF ROADWAY : 900.00 FEET.
VT-15A LENGTH OF ROADWAY : 233.00 FEET.

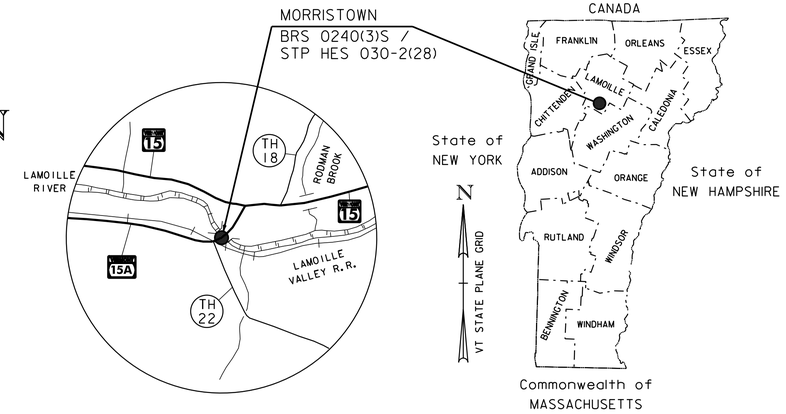

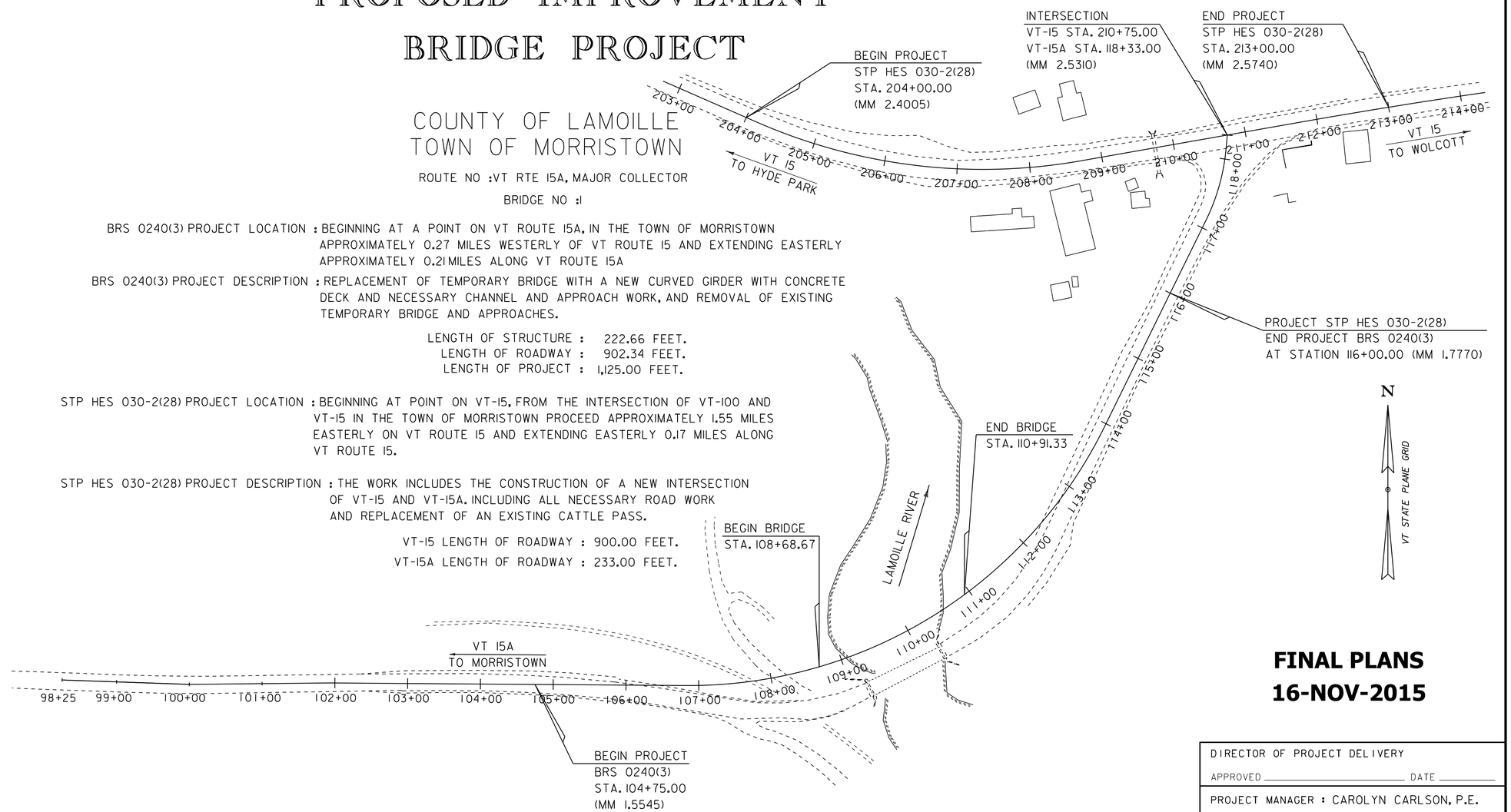

SCALE 1" = 80'-0"
80 0 80

CONSTRUCTION IS TO BE CARRIED ON IN ACCORDANCE WITH THESE PLANS AND THE STANDARD SPECIFICATIONS FOR CONSTRUCTION DATED 2011, AS APPROVED BY THE FEDERAL HIGHWAY ADMINISTRATION ON JULY 20, 2011 FOR USE ON THIS PROJECT, INCLUDING ALL SUBSEQUENT REVISIONS AND SUCH REVISED SPECIFICATIONS AND SPECIAL PROVISIONS AS ARE INCORPORATED IN THESE PLANS.

FINAL PLANS
16-NOV-2015

QUALITY ASSURANCE PROGRAM : LEVEL 2

SURVEYED BY : J.A. SHERIDAN
SURVEYED DATE : FEB 1991

DATUM
VERTICAL NAVD 88
HORIZONTAL NAD 83

DIRECTOR OF PROJECT DELIVERY
APPROVED _____ DATE _____

PROJECT MANAGER : CAROLYN CARLSON, P.E.

PROJECT NAME : MORRISTOWN
PROJECT NUMBER : BRS 0240(3)S/STP 030-2(28)

SHEET 1 OF 148 SHEETS

STATE OF VERMONT
AGENCY OF TRANSPORTATION

PRELIMINARY INFORMATION SHEET (BRIDGE)

Version 09.02.03

LRFD

INDEX OF SHEETS

PLAN SHEETS

1	TITLE SHEET
2	PRELIMINARY INFORMATION SHEET
3	VT-15A TYPICAL SECTIONS
4	TH-22 AND FIELD DRIVE TYPICAL SECTION
5	VT-15 TYPICAL SECTIONS
6	BRIDGE TYPICAL SECTIONS
7	EARTHWORKS TYPICAL SECTIONS
8	CONVENTIONAL SYMBOLOGY
9 - 10	TIE SHEET #1 - #2
11 - 13	VT-15A ALIGNMENT SHEET #1 - #3
14 - 15	VT-15 ALIGNMENT SHEET #1 - #2
16 - 18	VT-15A LAYOUT SHEET #1 - #3
19 - 20	VT-15 LAYOUT #1 - #2
21 - 23	VT-15A PROFILE #1 - #3
24 - 26	VT-15 PROFILE #1 - #3
27	TH-22 PROFILE
28	FIELD DRIVE PROFILE
29	TRAIL PROFILE
30	FIELD DRIVE #2 AND CATTLE PASS PROFILES
31 - 33	VT-15A DRAINAGE LAYOUT 1-3
34 - 35	VT-15 DRAINAGE LAYOUT 1-2
36	GRASS TREATMENT SWALE PLAN
37	TH-22 DITCH CONVERGENCE LAYOUT
38	VT-15 FIELD DRIVE DRANAGE
39	VT-15 DRAINAGE CONVEYANCE GRADING
40	DRAINAGE SYSTEMS PROFILES
41	PRECAST CONCRETE DRAINAGE STRUCTURE
42 - 44	VT-15A UTILITIES LAYOUT #1 - #3
45 - 46	VT-15 UTILITIES LAYOUT #1 - #2
47 - 49	VT-15A SIGN LAYOUT #1 - #3
50 - 51	VT-15 SIGN LAYOUT #1 - #2
52	TRAIL SIGN LAYOUT
53 - 58	TRAFFIC SIGN SUMMARY SHEETS #1 - #6
59	BORING INFORMATION SHEET
60 - 62	BORING LOGS #1 - #3
63	PLAN AND ELEVATION
64	BRIDGE TYPICAL
65	FRAMMING PLAN AND GIRDER ELEVATION
66 - 68	DECK REINFORCING PLAN 1# - 3#
69	ABUTMENT #1 PLAN AND ELEVATION
70	ABUTMENT #2 PLAN AND ELEVATION
71	WINGWALL ELEVATION AND WINGWALL TYPICAL
72	APPROACH SLAB DETAILS
73	PRECAST BOX END TYPICAL
74	PRECAST BOX WINGWALL ELEVATION
75 - 85	VT-15A SECTIONS SHEET #1 - #11
86	VT-15A BANKING AND MATERIAL TRANSITION
87 - 93	VT-15 SECTIONS SHEET #1 - #7
94	VT-15 BANKING AND MATERIAL TRANSITION
95 - 97	TH-22 SECTIONS #1 - #3
98 - 102	TRAIL SECTIONS SHEET #1 - #5
103 - 104	FIELD DRIVE SECTIONS SHEET #1 - #2
105 - 107	CATTLE PASS SECTIONS SHEET #1 - #3
108 - 110	GRASS TREATMENT SWALE SECTIONS SHEET #1 - #3
111 - 118	CHANNEL SECTION #1 - #8
119 - 120	EROSION CONTROL NARRATIVE SHEET #1 - #2
121 - 125	EROSION CONTROL EXISTING COND. SHEET #1 - #5
126 - 130	EROSION CONTROL CONST. COND. SHEET #1 - #5
131 - 135	EROSION CONTROL FINAL COND. SHEET #1 - #5
136 - 138	EROSION CONTROL DETAIL SHEET #1 - #3

STANDARDS LIST

FINAL HYDRAULIC REPORT

HYDROLOGIC DATA

Date: March 2013

DRAINAGE AREA : 237.9 sq. mi.
CHARACTER OF TERRAIN : Steeply sloped woodlands
STREAM CHARACTERISTICS : Meandering with a wide flood plain
NATURE OF STREAMBED : Sand and gravel

PEAK FLOW DATA

Q 2.33 =	4,500 cfs	Q 50 =	13, 100 cfs
Q 10 =	8,810 cfs	Q 100 =	15,500 cfs
Q 25 =	11,200 cfs	Q 500 =	21,700 cfs

DATE OF FLOOD OF RECORD : November 1927
ESTIMATED DISCHARGE: Unknown
WATER SURFACE ELEV.: Unknown
NATURAL STREAM VELOCITY : @ Q50 = 7.8 fps
ICE CONDITIONS : Moderate
DEBRIS: Moderate
DOES THE STREAM REACH MAXIMUM HIGHWATER ELEV. RAPIDLY? No
IS ORDINARY RISE RAPID? No
IS STAGE AFFECTED BY UPSTREAM OR DOWNSTREAM CONDITIONS? No
IF YES, DESCRIBE:

WATERSHED STORAGE: 2% HEADWATERS:
UNIFORM: X
IMMEDIATELY ABOVE SITE:

EXISTING STRUCTURE INFORMATION

STRUCTURE TYPE: Single Span Thru Truss - Now a Mabey Truss
YEAR BUILT: 1928, Maybe Truss installed between 2007 and 2009
CLEAR SPAN(NORMAL TO STREAM): 108 ft.
VERTICAL CLEARANCE ABOVE STREAMBED: 26 ft.
WATERWAY OF FULL OPENING: 2,075 sq. ft.
DISPOSITION OF STRUCTURE: Removal
TYPE OF MATERIAL UNDER SUBSTRUCTURE: Refer to borings

WATER SURFACE ELEVATIONS AT:

Q2.33 =	642.9'	VELOCITY =	7.5 fps
Q10 =	648.0'	"	8.4 fps
Q25 =	649.3'	"	9.9 fps
Q50 =	650.4'	"	10.9 fps
Q100 =	651.4'	"	12.4 fps

LONG TERM STREAMBED CHANGES: Unknown

IS THE ROADWAY OVERTOPPED BELOW Q100: Yes
FREQUENCY: At Q100
RELIEF ELEVATION: 651.9'
DISCHARGE OVER ROAD @Q100: 15 cfs

UPSTREAM STRUCTURE

TOWN:	Wolcott	DISTANCE:	22,800 ft.
HIGHWAY # :	TH 38	STRUCTURE #:	Br. 25
CLEAR SPAN:	112 ft.	CLEAR HEIGHT:	15 ft.
YEAR BUILT:	1996	FULL WATERWAY:	1,650 sq. ft.
STRUCTURE TYPE:	Single Span Steel Girder		

DOWNSTREAM STRUCTURE

TOWN:	Morristown	DISTANCE:	12,320 ft.
HIGHWAY # :	VT 100	STRUCTURE #:	Br. 215
CLEAR SPAN:	125 ft.	CLEAR HEIGHT:	15 ft.
YEAR BUILT:	1926	FULL WATERWAY:	2,250 sq. ft.
STRUCTURE TYPE:	Single Span Thru Truss		

LRFR LOAD RATING FACTORS

LOADING LEVELS	TRUCK						
	H-20	HL-93	3S2	6 AXLE	3A. STR.	4A. STR.	5A. SEMI
TONNAGE	20	36	36	66	30	34.5	38
INVENTORY							
POSTING							
OPERATING							
COMMENTS:							

PROPOSED STRUCTURE

STRUCTURE TYPE: Three-Span Steel Girder

CLEAR SPAN(NORMAL TO STREAM): ~220 ft.
VERTICAL CLEARANCE ABOVE STREAMBED: ~23 ft.
WATERWAY OF FULL OPENING: 2,700 sq. ft.

WATER SURFACE ELEVATIONS AT:

Q2.33 =	643.0'	VELOCITY=	7.4 fps
Q10 =	647.9'	"	7.5 fps
Q25 =	649.1'	"	8.4 fps
Q50 =	650.0'	"	8.9 fps
Q100 =	650.9'	"	9.8 fps

IS THE ROADWAY OVERTOPPED BELOW Q100: No
FREQUENCY: N/A
RELIEF ELEVATION: 659.7'
DISCHARGE OVER ROAD @Q100: N/A

AVERAGE LOW ELEVATION OF SUPERSTRUCTURE: 651.7' between Pier 2 & Abut 2
VERTICAL CLEARANCE: @ Q50 = 1.7'

SCOUR: Contractor scour = 0.5' at Q100 and 1.0' at Q500.
Pier scour = 14.0' at Q100 and 15.0' at Q500.
REQUIRED CHANNEL PROTECTION: Stone Fill, Type IV

PERMIT INFORMATION

AVERAGE DAILY FLOW:	500 cfs	DEPTH OR ELEVATION:
ORDINARY LOW WATER:	220 cfs	Elev = 641'
ORDINARY HIGH WATER:	1930 cfs	Elev = 643'

TEMPORARY BRIDGE REQUIREMENTS

STRUCTURE TYPE: N/A
CLEAR SPAN (NORMAL TO STREAM):
VERTICAL CLEARANCE ABOVE STREAMBED:
WATERWAY AREA OF FULL OPENING:

ADDITIONAL INFORMATION

Final hydraulics for the existing bridge is for the original truss bridge that has been removed.
The current temporary Mabey bridge has not been analyzed.

TRAFFIC MAINTENANCE NOTES

1. MAINTAIN TWO-WAY TRAFFIC ON A TEMPORARY BRIDGE.
2. TRAFFIC SIGNALS ARE NOT NECESSARY.
3. SIDEWALKS ARE NOT NECESSARY
4. THE APPROACHES FOR THE TEMPORARY BRIDGE SHALL BE PAVED.

DESIGN VALUES

1. DESIGN LIVE LOAD		HL-93
2. FUTURE PAVEMENT	d_p:	3.0 INCH
3. DESIGN SPAN	L:	220.00 FT
4. MIN. MID-SPAN POS. CAMBER @ RELEASE (PRESTRESSED UNITS)	Δ:	- - -
5. PRESTRESSING STRAND (0.60 INCH DIAMETER - LOW RELAX)	f_y:	270 KSI
6. PRESTRESSED CONCRETE STRENGTH	f'_c:	6.0 KSI
7. PRESTRESSED CONCRETE RELEASE STRENGTH	f'_{ci}:	5.0 KSI
8. CONCRETE, HIGH PERFORMANCE CLASS AA	f'_c:	4.0 KSI
9. CONCRETE, HIGH PERFORMANCE CLASS A	f'_c:	4.0 KSI
10. CONCRETE, HIGH PERFORMANCE CLASS B	f'_c:	3.5 KSI
11. CONCRETE, CLASS C	f'_c:	3.0 KSI
12. REINFORCING STEEL	f_y:	60 KSI
13. STRUCTURAL STEEL AASHTO M270	f_y:	- - -
14. SOIL UNIT WEIGHT	γ:	0.140 KCF
15. NOMINAL BEARING RESISTANCE OF SOIL	q_n:	4.0 KSF
16. SOIL BEARING RESISTANCE FACTOR (REFER TO AASHTO LRFD)	ϕ:	- - -
17. NOMINAL BEARING RESISTANCE OF ROCK	q_n:	10.0 KSF
18. ROCK BEARING RESISTANCE FACTOR (REFER TO AASHTO LRFD)	ϕ:	- - -
19. NOMINAL AXIAL PILE RESISTANCE	q_p:	- - -
20. PILE YIELD STRENGTH ASTM A572	f_y:	- - -
21. PILE SIZE		- - -
22. EST. PILE LENGTH	L_p:	
23. PILE RESISTANCE FACTOR	ϕ:	- - -
24. LATERAL PILE DEFLECTION	Δ:	- - -
25. BASIC WIND SPEED	V_{3s}:	- - -
26. MINIMUM GROUND SNOW LOAD	p_g:	- - -
27. SEISMIC DATA — PGA: - - -	S_s:	- - -
	S_1:	- - -

TRAFFIC DATA

YEAR	ADT	DHV	% D	% T	ADTT
2011	4100	430	75	7	260
2031	5100	530	75	9.8	450

20 year ESAL for flexible pavement from 2011 to 2031 : 1577000
40 year ESAL for flexible pavement from 2011 to 2051 : 3812000
Design Speed : 40 mph

PROJECT NAME: **MORRISTOWN**
PROJECT NUMBER: **BRS 0240(3)S**

FILE NAME: **s78f329pi.xls**
PROJECT LEADER: **C. CARLSON**
DESIGNED BY: **J. GRIFFIN**
PRELIMINARY INFORMATION SHEET

PLOT DATE: 3/4/2015
DRAWN BY: **R. PELLETT**
CHECKED BY: **J. LACROIX**
SHEET 2 OF 138

MATERIAL TOLERANCES

(IF USED ON PROJECT)

SURFACE	
- PAVEMENT (TOTAL THICKNESS)	+/- 1/4"
- AGGREGATE SURFACE COURSE	+/- 1/2"
SUBBASE	+/- 1"
SAND BORROW	+/- 1"

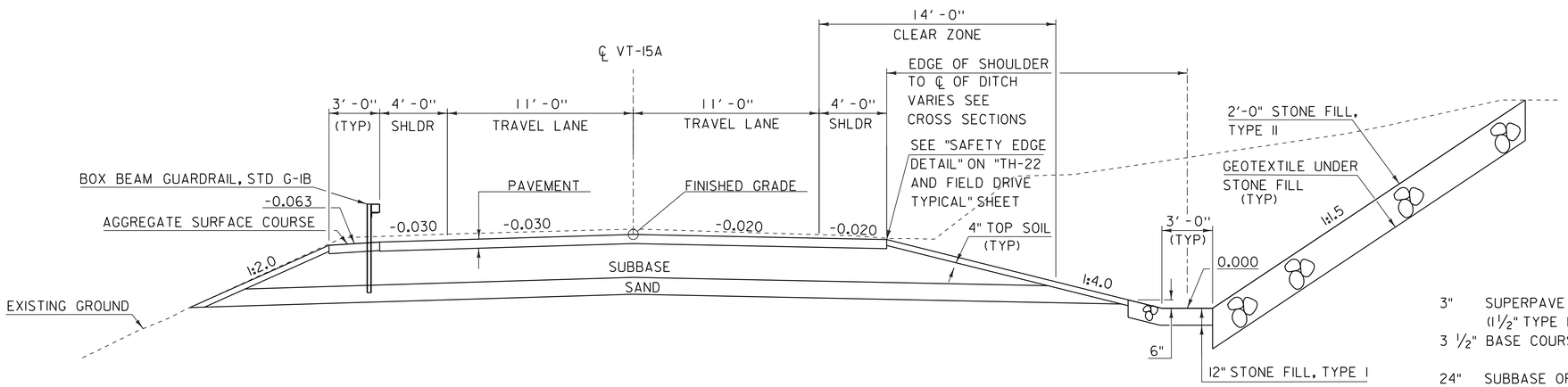

VT-15A TYPICAL

SCALE 1/4" = 1'-0"

3" SUPERPAVE BITUMINOUS CONCRETE PAVEMENT (1 1/2" TYPE IVS OVER 1 1/2" TYPE IVS)

3 1/2" BASE COURSE OF SUPERPAVE BITUMINOUS CONCRETE PAVEMENT (TYPE IIS)

24" SUBBASE OF DENSE GRADED CRUSHED STONE

12" SAND BORROW

6" AGGREGATE SURFACE COURSE

TACK COAT: EMULSIFIED ASPHALT IS TO BE APPLIED AT THE RATE OF 0.025 GAL/SY BETWEEN SUCCESSIVE COURSES OF PAVEMENT AS DIRECTED BY THE ENGINEER.

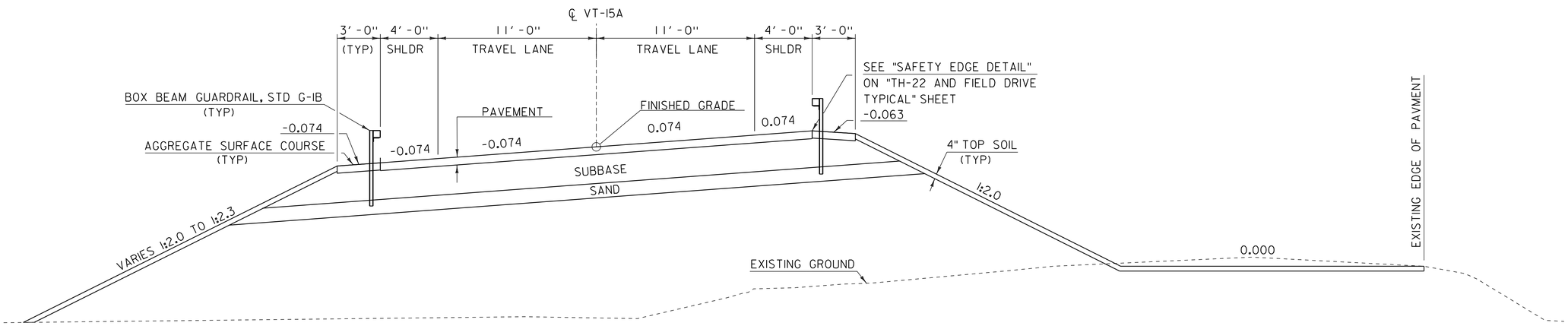

VT-15A BANKED TYPICAL

SCALE 1/4" = 1'-0"

NOTES:
1. ANY REFERENCE TO "PAVEMENT" OR WORDING/DIMENSIONING OF "PAVEMENT" WITHIN THIS PLAN SET INDICATES THE USE OF "SUPERPAVE BITUMINOUS CONCRETE PAVEMENT" UNLESS OTHERWISE NOTED.
2. ANY REFERENCE TO "SUBBASE" OR WORDING/DIMENSIONING OF "SUBBASE" WITHIN THIS PLAN SET INDICATES THE USE OF "DENSE GRADED CRUSHED STONE" UNLESS OTHERWISE NOTED.

PROJECT NAME: MORRISTOWN	
PROJECT NUMBER: BRS 0240(3)S	
FILE NAME: s78f329typ.dgn	PLOT DATE: 16-NOV-2015
PROJECT LEADER: C. CARLSON	DRAWN BY:
DESIGNED BY: J. GRIFFIN	CHECKED BY: J. LACROIX
VT-15A TYPICAL SECTIONS	SHEET 3 OF 148

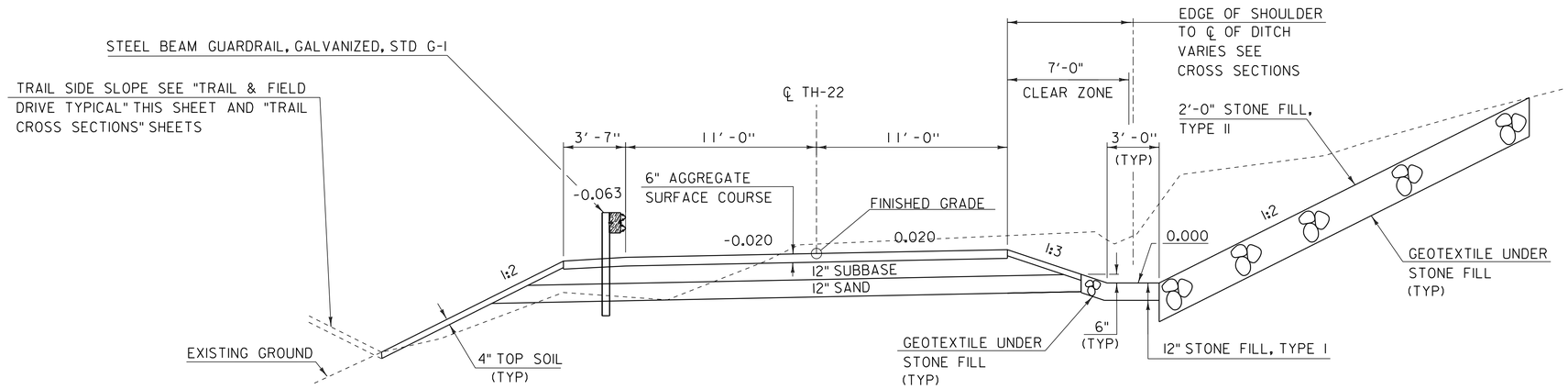

TH-22 (DARLING RD)
TYPICAL WITHOUT LEDGE
SCALE 1/4" = 1'-0"

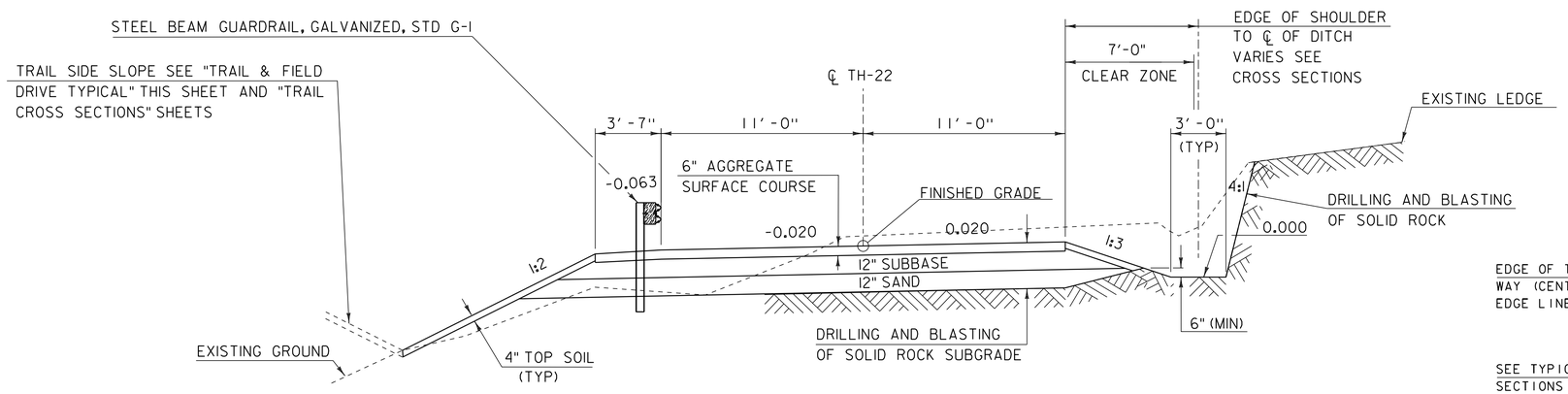

TH-22 (DARLING RD)
TYPICAL WITH LEDGE
SCALE 1/4" = 1'-0"

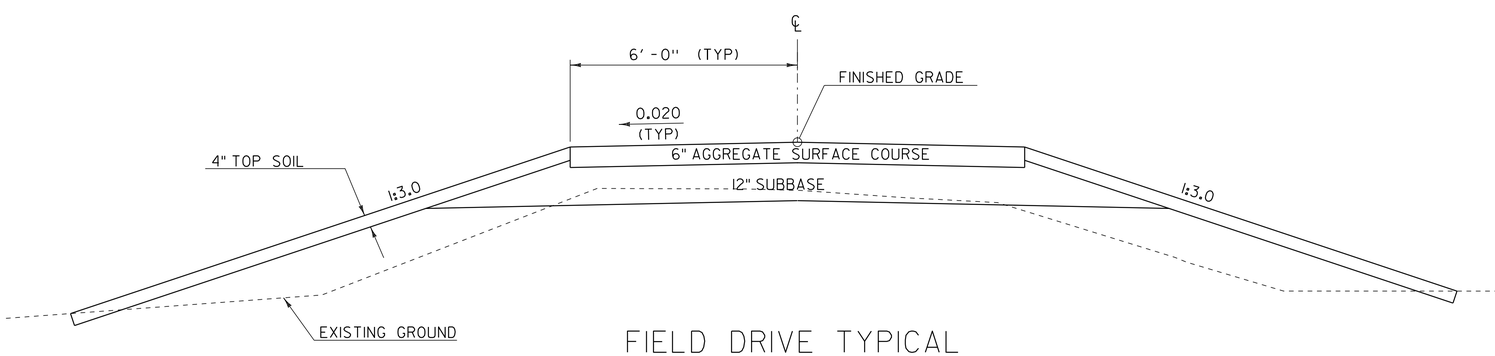

FIELD DRIVE TYPICAL
SCALE 1/2" = 1'-0"

MATERIAL TOLERANCES
(IF USED ON PROJECT)

SURFACE	
- PAVEMENT (TOTAL THICKNESS)	+/- 1/4"
- AGGREGATE SURFACE COURSE	+/- 1/2"
SUBBASE	+/- 1"
SAND BORROW	+/- 1"

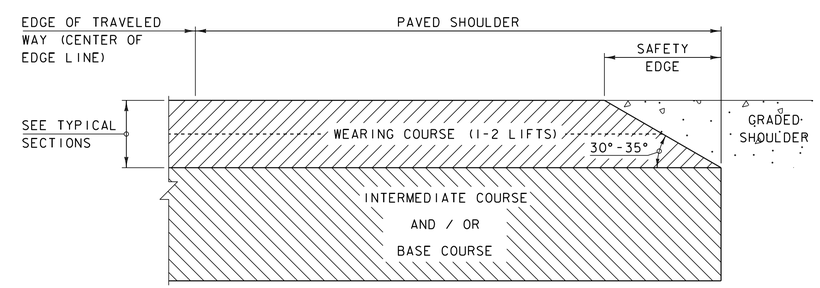

SAFETY EDGE DETAIL
NOT TO SCALE

1. LEVELING COURSE MAY INCLUDE THE "SAFETY EDGE" AT THE CONTRACTOR'S CHOICE.
2. THE EDGE OF PAVEMENT SHALL BE FORMED IN SUCH A WAY THAT THE BITUMINOUS CONCRETE PAVEMENT IS EXTRUDED OR COMPRESSED TO FORM THE 30 TO 35 DEGREE ANGLE. DEVICES THAT SIMPLY STRIKE-OFF THE MIX WITHOUT PROVIDING ANY COMPACTIVE EFFORT WILL NOT BE ALLOWED.
3. THE PAVED SHOULDER EXTENDS FROM THE EDGE OF TRAVELED WAY TO THE EDGE OF THE WEARING COURSE, INCLUDING THE "SAFETY EDGE".

PROJECT NAME: MORRISTOWN	
PROJECT NUMBER: BRS 0240(3)S	
FILE NAME: s78f329typ.dgn	PLOT DATE: 16-NOV-2015
PROJECT LEADER: C. CARLSON	DRAWN BY:
DESIGNED BY: J. GRIFFIN	CHECKED BY: J. LACROIX
TH-22 AND FIELD DRIVE TYPICAL SECTION	SHEET 4 OF 148

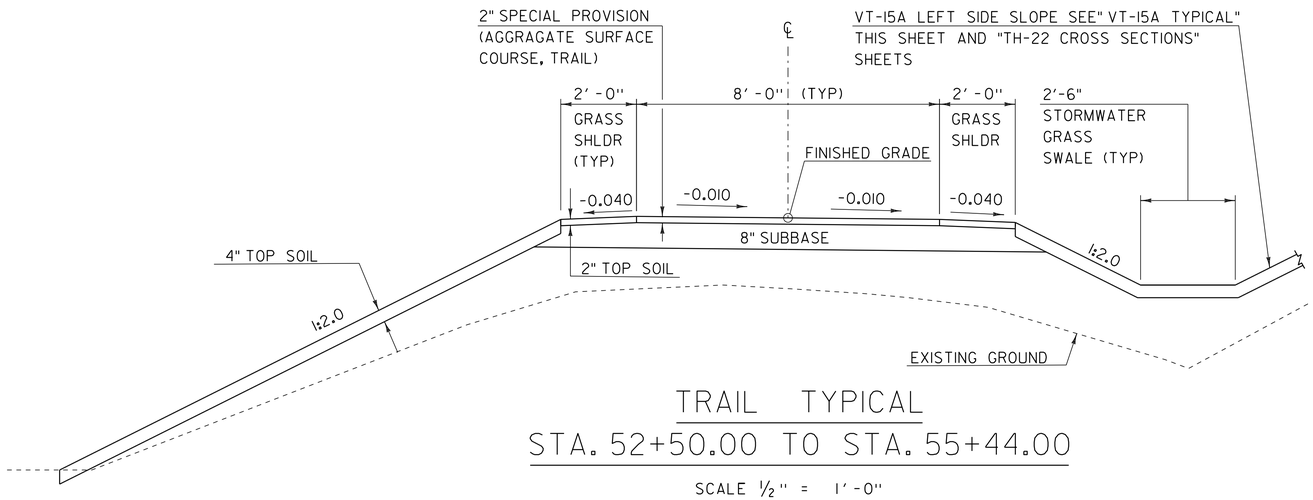

TRAIL TYPICAL
STA. 52+50.00 TO STA. 55+44.00

SCALE ½" = 1'-0"

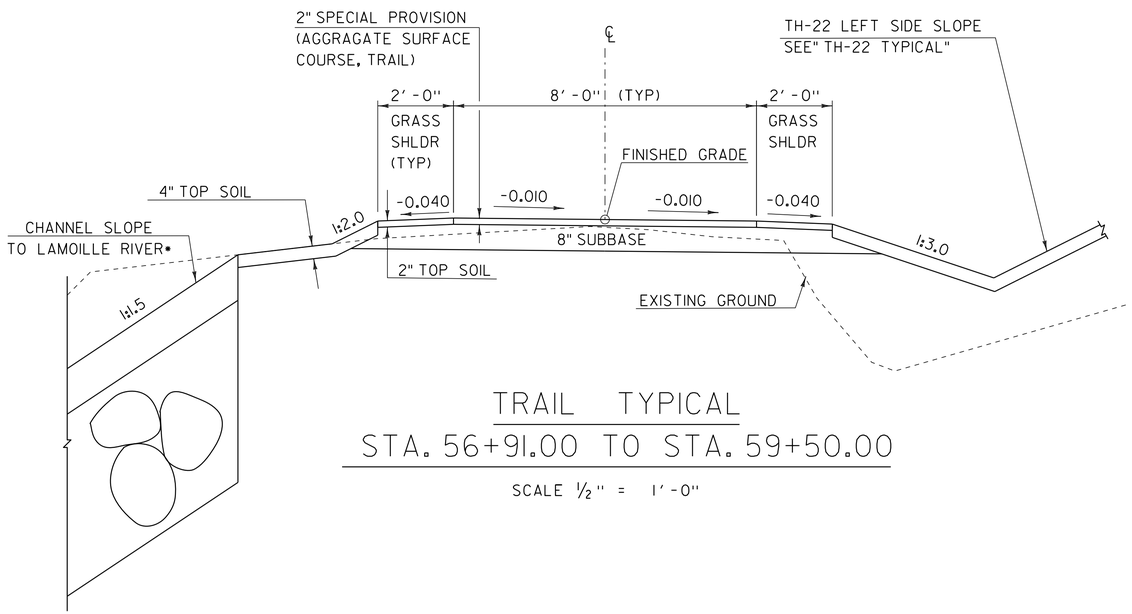

TRAIL TYPICAL
STA. 56+91.00 TO STA. 59+50.00

SCALE ½" = 1'-0"

1. CHOKE EXISTING OPEN GRADED BALLAST WITH GRANULAR MATERIAL, AND COMPACT WITH VIBRATOR ROLLER IN ACCORDANCE WITH ITEM 900.608, SPECIAL PROVISION (AGGREGATE SURFACE COURSE, TRAIL)
2. ENTIRE TRAIL SURFACE SHALL BE BANKED 2% TO THE INSIDE OF CURVES. TRAIL SHALL OTHERWISE BE GRADED TO DRAIN OR SLOPED TO ONE SIDE IN FLAT AREAS WITH A 2% CROSS SLOPE MAXIMUM.
3. EDGE OF SIGN POSTS SHALL BE NO CLOSER THAN 2' AND NO FURTHER THAN 5' FROM THE EDGE OF TRAIL.
4. IF THE EXISTING RAIL BED LACKS 8" OF SALVAGEABLE BALLAST OR WELL DRAINED GRANULAR MATERIAL, THE USE OF VT-15A SUBBASE (DENSE GRADED CRUSHED STONE) SHALL BE ADDED TO ARCHIVE THE REQUIRED 8" BASE.
5. REMOVE LOOSE VEGETATION, SILT, AND DEBRIS FROM BALLAST SURFACE PRIOR TO SCARIFYING AND WINDROWING BALLAST. CONTAIN BALLAST WITHIN RAIL BED. SCARIFYING AND WINDROW BALLAST TO A DEPTH OF 8" REPEATEDLY TO BREAK UP ROOT MAT AND EXPOSE SCRAP METAL. REMOVE METAL, ROOTS, STUMPS, DEBRIS, AND LARGE ROCKS. THEN GRADE AND ROLLER COMPACT BALLAST.
6. REMOVAL OF LOOSE VEGETATION, SILT, AND DEBRIS FROM BALLAST SURFACE, SCARIFYING AND WINDROWING BALLAST, REMOVAL OF ROOTS, STUMPS, DEBRIS, AND LARGE ROCKS SHALL BE PAID FOR UNDER ITEM 900.640, "SPECIAL PROVISION (WINDROWING BALLAST)".
7. BALLAST GRADING AND ROLLER COMPACTION SHALL BE PAID FOR UNDER ITEM 900.645, "SPECIAL PROVISION (BALLAST SHAPING AND GRADING)".

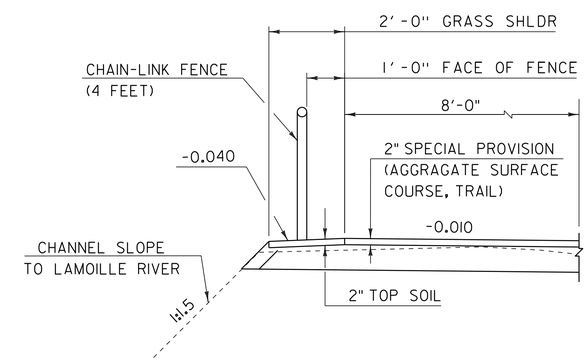

TRAIL TYPICAL WITH FENCE

PROJECT NAME: MORRISTOWN	
PROJECT NUMBER: STP HES 030-2(28)	
FILE NAME: s78f329typ.dgn	PLOT DATE: 16-NOV-2015
PROJECT LEADER: C. CARLSON	DRAWN BY:
DESIGNED BY: J. GRIFFIN	CHECKED BY: J. LACROIX
TRAIL TYPICAL SECTIONS	SHEET 5 OF 148

MATERIAL TOLERANCES

(IF USED ON PROJECT)

SURFACE	
- PAVEMENT (TOTAL THICKNESS)	+/- 1/4"
- AGGREGATE SURFACE COURSE	+/- 1/2"
SUBBASE	+/- 1"
SAND BORROW	+/- 1"

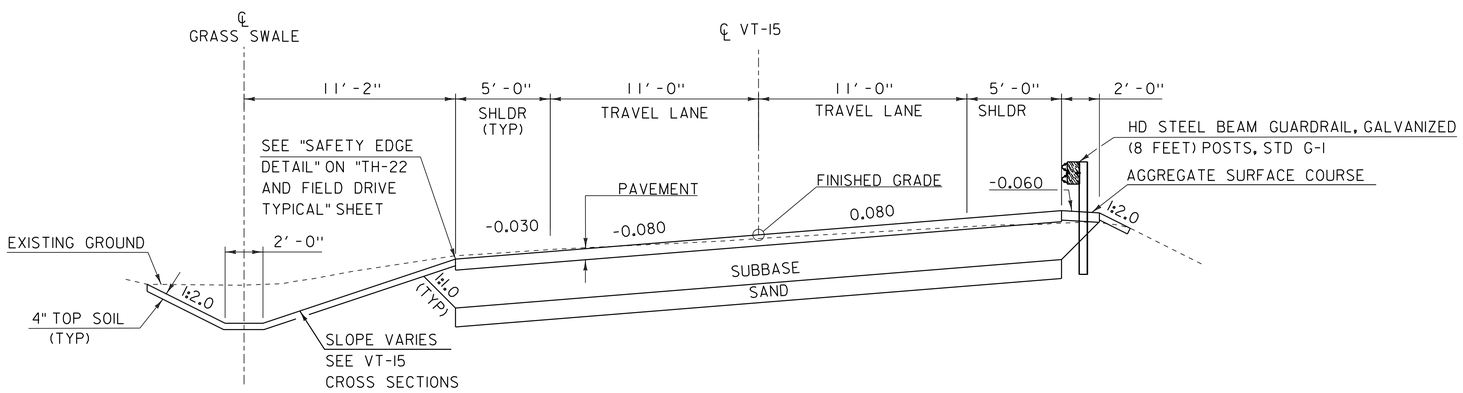

VT-15 BANKED TYPICAL

SCALE 1/4" = 1'-0"

1 1/2" SUPERPAVE BITUMINOUS CONCRETE PAVEMENT (TYPE IVS)

2 3/4" SUPERPAVE BITUMINOUS CONCRETE PAVEMENT (TYPE IIS)

2 3/4" SUPERPAVE BITUMINOUS CONCRETE PAVEMENT (TYPE IIS)

24" SUBBASE OF DENSE GRADED CRUSHED STONE

12" SAND BORROW

6" AGGREGATE SURFACE COURSE

TACK COAT: EMULSIFIED ASPHALT IS TO BE APPLIED AT THE RATE OF 0.025 GAL/SY BETWEEN SUCCESSIVE COURSES OF PAVEMENT AS DIRECTED BY THE ENGINEER.

NOTES:
1. ANY REFERENCE TO "PAVEMENT" OR WORDING/DIMENSIONING OF "PAVEMENT" WITHIN THIS PLAN SET INDICATES THE USE OF "SUPERPAVE BITUMINOUS CONCRETE PAVEMENT" UNLESS OTHERWISE NOTED.
2. ANY REFERENCE TO "SUBBASE" OR WORDING/DIMENSIONING OF "SUBBASE" WITHIN THIS PLAN SET INDICATES THE USE OF "DENSE GRADED CRUSHED STONE" UNLESS OTHERWISE NOTED.

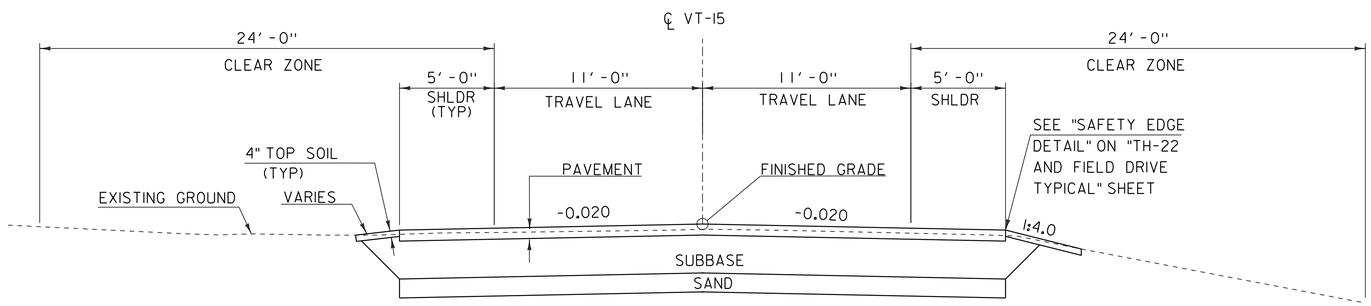

VT-15 TYPICAL

SCALE 1/4" = 1'-0"

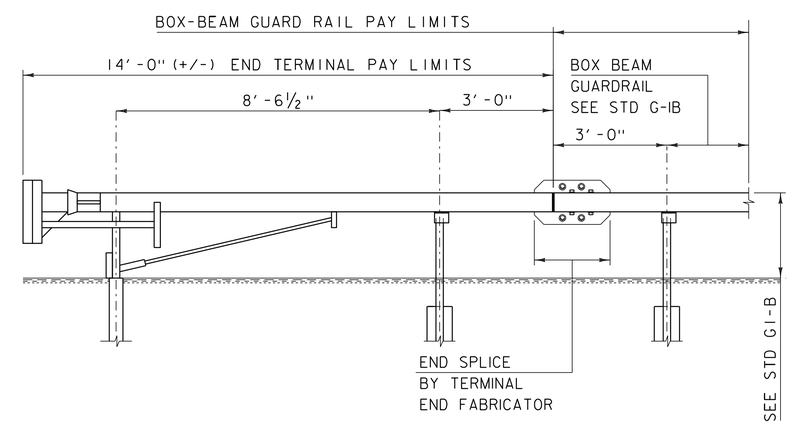

MANUFACTURED TERMINAL SECTION, TANGENT DETAIL (BOX BEAM)

SCALE 1/2" = 1'-0"

PROJECT NAME: MORRISTOWN	
PROJECT NUMBER: STP HES 030-2(28)	
FILE NAME: s78f329typ.dgn	PLOT DATE: 16-NOV-2015
PROJECT LEADER: C. CARLSON	DRAWN BY:
DESIGNED BY: J. GRIFFIN	CHECKED BY: J. LACROIX
VT-15 TYPICAL SECTIONS	SHEET 6 OF 148

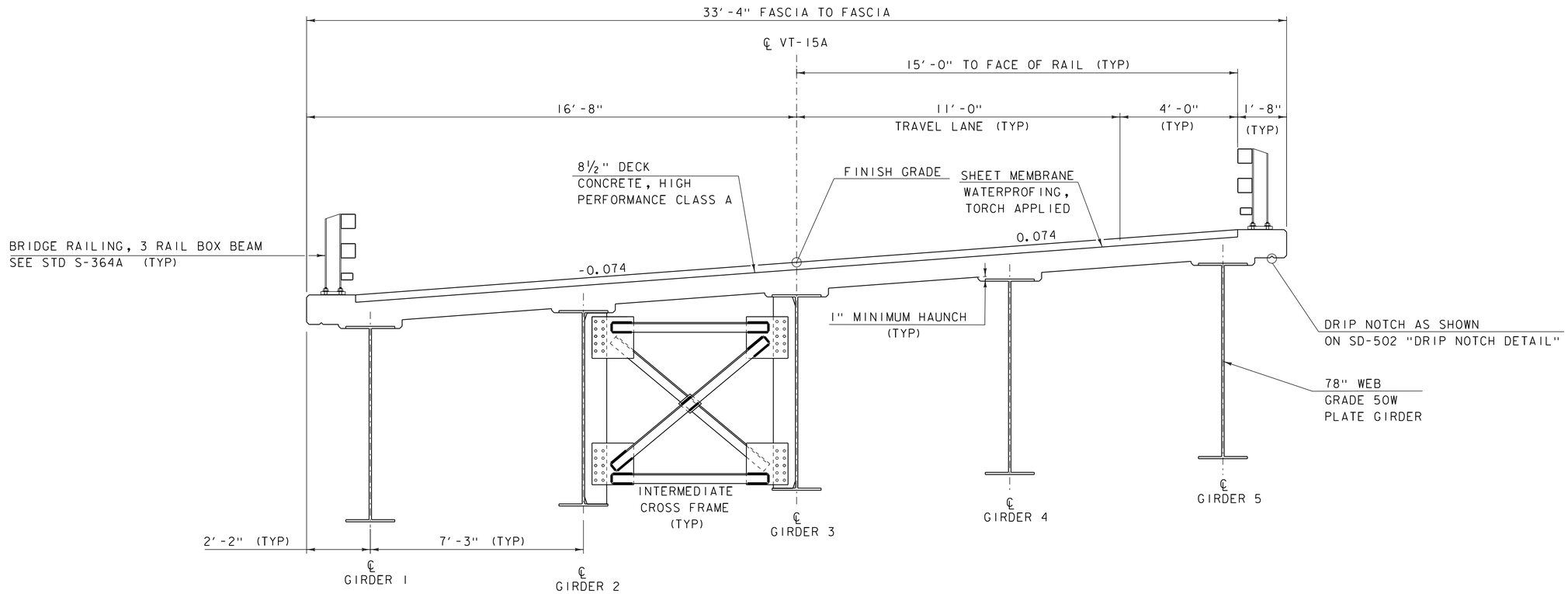

BRIDGE TYPICAL SECTION

SCALE ½" = 1'-0"

PROJECT NAME: MORRISTOWN	
PROJECT NUMBER: BRS 0240(3)S	
FILE NAME: s78f329typ.dgn	PLOT DATE: 16-NOV-2015
PROJECT LEADER: C. CARLSON	DRAWN BY:
DESIGNED BY: J. GRIFFIN	CHECKED BY: J. LACROIX
BRIDGE TYPICAL SECTION	SHEET 7 OF 148

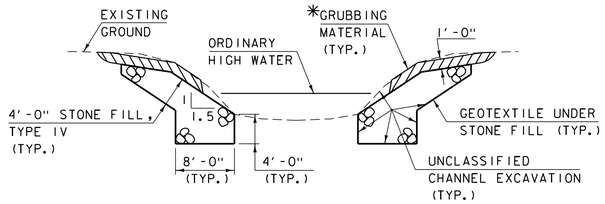

TYPICAL CHANNEL SECTION

(NOT TO SCALE)

*GRUBBING MATERIAL SHALL BE PLACED ON THE STONE FILL IN THE AREA UNDER THE BRIDGE WITH THE FOLLOWING GUIDE LINES. NO GRUBBING MATERIAL BELOW OWH, NO GRUBBING MATERIAL 3 FEET HORIZONTALLY FROM FASCIAS OF PROPOSED PIERS, WING WALLS AND ABUTMENTS. WHENEVER CHANNEL SLOPE INTERSECTS ROADWAY SUBBASE, GRUBBING MATERIAL SHALL BEGIN AT THE BOTTOM OF SUBBASE.

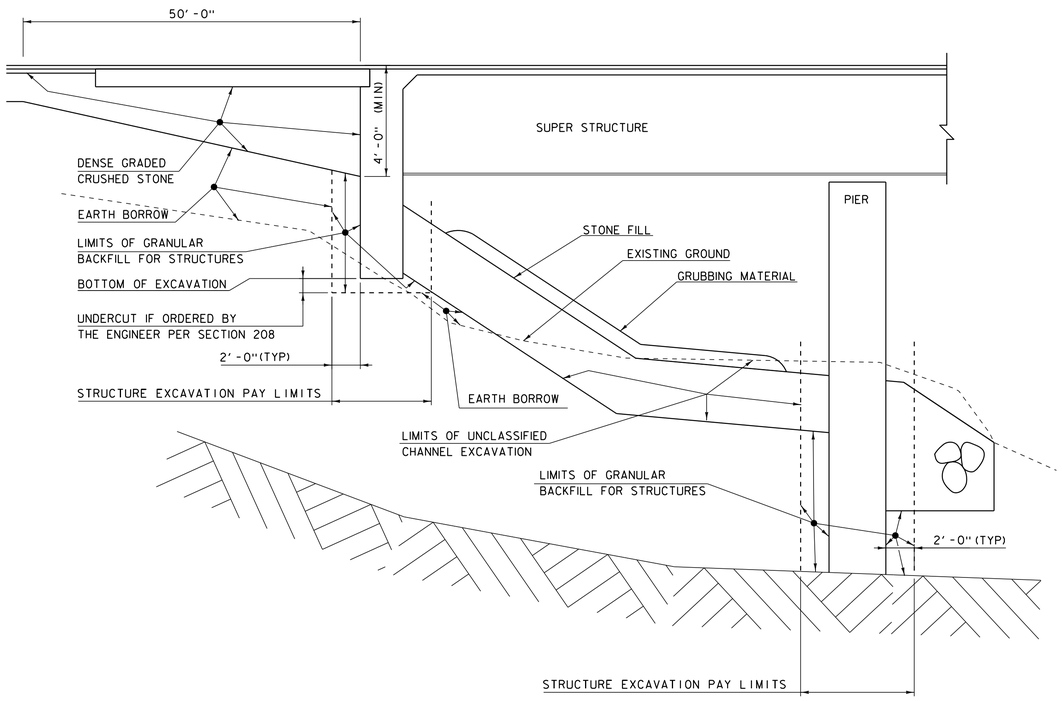

ABUTMENT #1 EARTHWORK TYPICAL

(NOT TO SCALE)

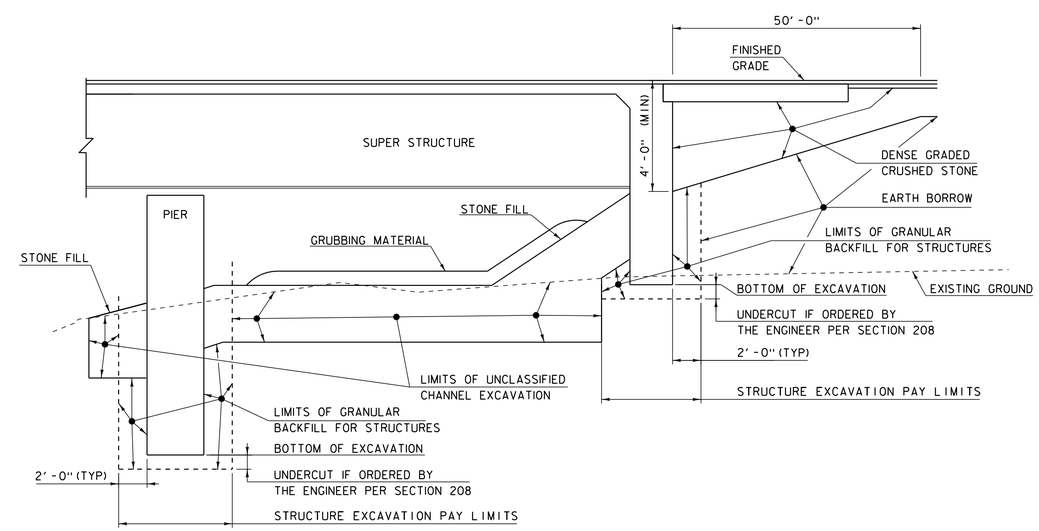

ABUTMENT #2 EARTHWORK TYPICAL

(NOT TO SCALE)

PROJECT NAME: MORRISTOWN	
PROJECT NUMBER: BRS 0240(3)S	
FILE NAME: s78f329typ.dgn	PLOT DATE: 16-NOV-2015
PROJECT LEADER: C. CARLSON	DRAWN BY:
DESIGNED BY: J. GRIFFIN	CHECKED BY: J. LACROIX
EARTHWORKS TYPICAL SECTIONS	SHEET 8 OF 148

GENERAL INFORMATION

SYMBOLOGY LEGEND NOTE

THE SYMBOLOGY ON THIS SHEET IS INTENDED TO COVER STANDARD CONVENTIONAL SYMBOLOGY. THE SYMBOLOGY IS USED FOR EXISTING & PROPOSED FEATURES WITH HEAVIER LINEWEIGHT, IN COMBINATION WITH PROJECT ANNOTATION, AS NOTED ON PROJECT PLAN SHEETS. THIS LEGEND SHEET COVERS THE BASICS. SYMBOLOGY ON PLANS MAY VARY, PLAN ANNOTATIONS AND NOTES SHOULD BE USED TO CLARIFY AS NEEDED.

R.O.W. ABBREVIATIONS (CODES) & SYMBOLS

POINT	CODE	DESCRIPTION
	CH	CHANNEL EASEMENT
	CONST	CONSTRUCTION EASEMENT
	CUL	CULVERT EASEMENT
	D&C	DISCONNECT & CONNECT
	DIT	DITCH EASEMENT
	DR	DRAINAGE EASEMENT
	DRIVE	DRIVEWAY EASEMENT
	EC	EROSION CONTROL
	HWY	HIGHWAY EASEMENT
	I&M	INSTALL & MAINTAIN EASEMENT
	LAND	LANDSCAPE EASEMENT
	R&RES	REMOVE & RESET
	R&REP	REMOVE & REPLACE
	SR	SLOPE RIGHT
	UE	UTILITY EASEMENT
	(P)	PERMANENT EASEMENT
	(T)	TEMPORARY EASEMENT
■	BNDNS	BOUND SET
⊡	BNDNS	BOUND TO BE SET
●	IPNS	IRON PIN SET
◎	IPNS	IRON PIN TO BE SET
⊠	CALC	EXISTING ROW POINT
○	PROW	PROPOSED ROW POINT
[LENGTH]		LENGTH CARRIED ON NEXT SHEET

COMMON TOPOGRAPHIC POINT SYMBOLS

POINT	CODE	DESCRIPTION
	APL	BOUND APPARENT LOCATION
	BM	BENCHMARK
	BND	BOUND
	CB	CATCH BASIN
	COMB	COMBINATION POLE
	DITHR	DROP INLET THROATED DNC
	EL	ELECTRIC POWER POLE
	FPOLE	FLAGPOLE
	GASFIL	GAS FILLER
	GP	GUIDE POST
	GSO	GAS SHUT OFF
	GUY	GUY POLE
	GUYW	GUY WIRE
	GV	GATE VALUE
	H	TREE HARDWOOD
	HCTRL	CONTROL HORIZONTAL
	HVCTRL	CONTROL HORIZ. & VERTICAL
	HYD	HYDRANT
	IP	IRON PIN
	IPIPE	IRON PIPE
	LI	LIGHT - STREET OR YARD
	MB	MAILBOX
	MH	MANHOLE (MH)
	MM	MILE MARKER
	PM	PARKING METER
	PMK	PROJECT MARKER
	POST	POST STONE/WOOD
	RRSIG	RAILROAD SIGNAL
	RRSL	RAILROAD SWITCH LEVER
	S	TREE SOFTWOOD
	SAT	SATELLITE DISH
	SHRUB	SHRUB
	SIGN	SIGN
	STUMP	STUMP
	TEL	TELEPHONE POLE
	TIE	TIE
	TSIGN	SIGN W/DOUBLE POST
	VCTRL	CONTROL VERTICAL
	WELL	WELL
	WSO	WATER SHUT OFF

THESE ARE COMMON VAOT SURVEY POINT SYMBOLS FOR EXISTING FEATURES, ALSO USED FOR PROPOSED FEATURES WITH HEAVIER LINEWEIGHT, IN COMBINATION WITH PROPOSED ANNOTATION.

PROPOSED GEOMETRY CODES

CODE	DESCRIPTION
PC	POINT OF CURVATURE
PI	POINT OF INTERSECTION
CC	CENTER OF CURVE
PT	POINT OF TANGENCY
PCC	POINT OF COMPOUND CURVE
PRC	POINT OF REVERSE CURVE
POB	POINT OF BEGINNING
POE	POINT OF ENDING
STA	STATION PREFIX
AH	AHEAD STATION SUFFIX
BK	BACK STATION SUFFIX
D	CURVE DEGREE OF (100FT)
R	CURVE RADUIS OF
T	CURVE TANGENT LENGTH
L	CURVE LENGTH OF
E	CURVE EXTERNAL DISTANCE

UTILITY SYMBOLOGY

UNDERGROUND UTILITIES

UGU	UTILITY (GENERIC-UNKNOWN)
UT	TELEPHONE
UE	ELECTRIC
UC	CABLE (TV)
UEC	ELECTRIC+CABLE
UET	ELECTRIC+TELEPHONE
UCT	CABLE+TELEPHONE
UECT	ELECTRIC+CABLE+TELEP.
G	GAS LINE
W	WATER LINE
S	SANITARY SEWER (SEPTIC)

ABOVE GROUND UTILITIES (AERIAL)

AGU	UTILITY (GENERIC-UNKNOWN)
T	TELEPHONE
E	ELECTRIC
C	CABLE (TV)
EC	ELECTRIC+CABLE
ET	ELECTRIC+TELEPHONE
AER E&T	ELECTRIC+TELEPHONE
CT	CABLE+TELEPHONE
ECT	ELECTRIC+CABLE+TELEP.
	UTILITY POLE GUY WIRE

PROJECT CONSTRUCTION SYMBOLOGY

PROJECT DESIGN & LAYOUT SYMBOLOGY

CZ	CLEAR ZONE
	PLAN LAYOUT MATCHLINE

PROJECT CONSTRUCTION FEATURES

	TOP OF CUT SLOPE
	TOE OF FILL SLOPE
	STONE FILL
	BOTTOM OF DITCH ℄
	CULVERT PROPOSED
	STRUCTURE SUBSURFACE
PDF	PROJECT DEMARCATION FENCE
BF	BARRIER FENCE
	TREE PROTECTION ZONE (TPZ)
	STRIPING LINE REMOVAL
	SHEET PILES

CONVENTIONAL BOUNDARY SYMBOLOGY

BOUNDARY LINES

TOWN LINE	TOWN BOUNDARY LINE
COUNTY LINE	COUNTY BOUNDARY LINE
STATE LINE	STATE BOUNDARY LINE
	PROPOSED STATE R.O.W. (LIMITED ACCESS)
	PROPOSED STATE R.O.W.
	STATE ROW (LIMITED ACCESS)
	STATE ROW
	TOWN ROW
	PERMANENT EASEMENT LINE (P)
	TEMPORARY EASEMENT LINE (T)
	SURVEY LINE
P / L	PROPERTY LINE (P/L)
SR	SLOPE RIGHTS
6f	6F PROPERTY BOUNDARY
4f	4F PROPERTY BOUNDARY
HAZ	HAZARDOUS WASTE

EPSC LAYOUT PLAN SYMBOLOGY

EPSC MEASURES

	FILTER CURTAIN
	SILT FENCE
	SILT FENCE WOVEN WIRE
	CHECK DAM
	DISTURBED AREAS REQUIRING RE-VEGETATION
	EROSION MATTING

SEE EPSC DETAIL SHEETS FOR ADDITIONAL SYMBOLOGY

ENVIRONMENTAL RESOURCES

	WETLAND BOUNDARY
	RIPARIAN BUFFER ZONE
	WETLAND BUFFER ZONE
	SOIL TYPE BOUNDARY
T&E	THREATENED & ENDANGERED SPECIES
HAZ	HAZARDOUS WASTE AREA
AG	AGRICULTURAL LAND
HABITAT	FISH & WILDLIFE HABITAT
FLOOD PLAIN	FLOOD PLAIN
OHW	ORDINARY HIGH WATER (OHW)
	STORM WATER
	USDA FOREST SERVICE LANDS
	WILDLIFE HABITAT SUIT/CONN

ARCHEOLOGICAL & HISTORIC

ARCH	ARCHEOLOGICAL BOUNDARY
HISTORIC DIST	HISTORIC DISTRICT BOUNDARY
HISTORIC	HISTORIC AREA
H	HISTORIC STRUCTURE

CONVENTIONAL TOPOGRAPHIC SYMBOLOGY

EXISTING FEATURES

	ROAD EDGE PAVEMENT
	ROAD EDGE GRAVEL
	DRIVEWAY EDGE
	DITCH
	FOUNDATION
	FENCE (EXISTING)
	FENCE WOOD POST
	FENCE STEEL POST
	GARDEN
	ROAD GUARDRAIL
	RAILROAD TRACKS
	CULVERT (EXISTING)
	STONE WALL
	WALL
	WOOD LINE
	BRUSH LINE
	HEDGE
	BODY OF WATER EDGE
	LEDGE EXPOSED

PROJECT NAME: MORRISTOWN
PROJECT NUMBER: BRS 0240(3)S

FILE NAME: s78f329forms.dgn
PROJECT LEADER: C. CARLSON
DESIGNED BY: N. VANDENBERG
CONVENTIONAL SYMBOLOGY

PLOT DATE: 16-NOV-2015
DRAWN BY: G. ROKES
CHECKED BY: N. VANDENBERG
SHEET 9 OF 148

GPS CONTROL POINTS

HVCTRL #1

Standard Disk Stamped
USGS C6 1927
NORTH = 752404.463
EAST = 1622969.566
ELEV. = 666.833

TO REACH FROM THE CIVIL WAR MONUMENT AT THE INTERSECTION OF ROUTE 12 AND ROUTE 15A IN MORRISVILLE, GO EAST ALONG ROUTE 15A FOR 1.5 MI (2.4 KM) TO THE SITE OF THE MARK ON THE LEFT IN A 2 M (6.6 FT) X 6 M (19.7 FT) ROCK OUTCROP AT THE CREST OF A HILL, JUST ABOVE THE CROSSING OF THE LAMOILLE VALLEY RAILROAD AND THE STEEL BRIDGE OVER THE LAMOILLE RIVER. IT IS 23.5 M (77.1 FT) WEST OF THE CROSSING, 7.3 M (24.0 FT) NORTH OF AND ABOUT LEVEL WITH THE CENTERLINE OF ROUTE 15A, 4.8 M (15.7 FT) SOUTHWEST OF AND ABOUT 1.5 M (4.9 FT) HIGHER THAN THE SOUTHWEST RAIL OF THE LAMOILLE VALLEY RAILROAD, AND 6.5 FT (2.0 M) NORTHWEST OF A FIBERGLASS WITNESS POST.

HVCTRL #11

Standard Disk Stamped
A02002
NORTH = 752722.732
EAST = 1620840.853
ELEV. = 667.815

GENERAL LOCATION, MORRISTOWN VT. OWNERSHIP, DAVE WILLIAMS, 1092 PARK STREET, MORRISVILLE, VT 05661. TO REACH FROM THE INTERSECTION OF VT ROUTE 12 AND VT ROUTE 15A GO EAST ALONG VT ROUTE 15A FOR 1.0 MI TO THE SITE OF THE MARK ON THE RIGHT. TO REACH FROM THE INTERSECTION OF VT ROUTE 15A AND VT ROUTE 15 GO WEST ALONG VT ROUTE 15A FOR 0.6 MI TO THE SITE OF THE MARK ON THE LEFT. THE MARK IS SET IN THE TOP OF THE NORTH EDGE OF A 1.5 M X 0.8 M ROCK OUTCROP WHICH PROJECTS 0.4 M ABOVE GROUND SURFACE. IT IS 7.1 M SOUTH OF AND ABOUT 1.0 M HIGHER THAN THE CENTERLINE OF VT ROUTE 15A, 23.7 M NORTH NORTHEAST OF THE NORTHEAST CORNER OF THE WILLIAM'S HOUSE, 20.7 M NORTH NORTHWEST OF THE NORTHWEST CORNER OF A SHED, AND 22.7 M SOUTHEAST OF POLE NO 34/26 AND A FIBERGLASS WITNESS POST.

* Description provided by Vermont Agency of Transportation Geodetic Survey Unit

GPS CONTROL POINTS

HVCTRL #10

Standard Disk Stamped
TENNEY 2004
NORTH = 752743.700
EAST = 1623537.930
ELEV. = 663.635

GENERAL LOCATION, MORRISTOWN, VT. TO REACH FROM THE INTERSECTION OF VT ROUTE 15 AND VT ROUTE 15A GO SOUTHWEST ALONG VT ROUTE 15A FOR ABOUT 110 M TO THE SITE OF THE MARK ON THE RIGHT. THE MARK IS SET 3 CM BELOW GROUND SURFACE IN THE TOP OF A FENO STYLE MONUMENT. IT IS 5.5 M NORTHWEST OF AND ABOUT 0.2 M LOWER THAN THE CENTERLINE OF VT ROUTE 15A, 9.3 M SOUTH SOUTHWEST OF AN UNNUMBERED POLE, 17.6 M EAST NORTHEAST OF THE CENTER OF THE WEST (OUTLET) END OF A 45 CM DIAMETER METAL CULVERT, 0.4 M SOUTHEAST OF A WIRE FENCE, AND 0.2 M SOUTHEAST OF A FIBERGLASS WITNESS POST.

TRAVERSE TIES

HVCTRL #2

NORTH = 753039.686
EAST = 1623346.536
ELEV. = 700.663

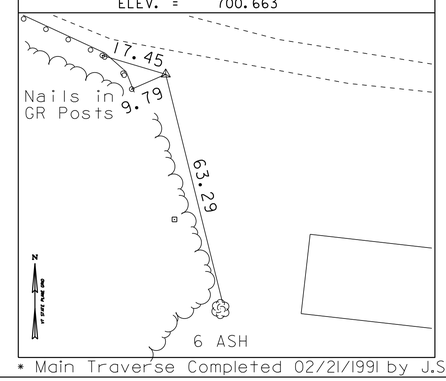

HVCTRL #3

NORTH = 753472.098
EAST = 1622622.554
ELEV. = 689.816

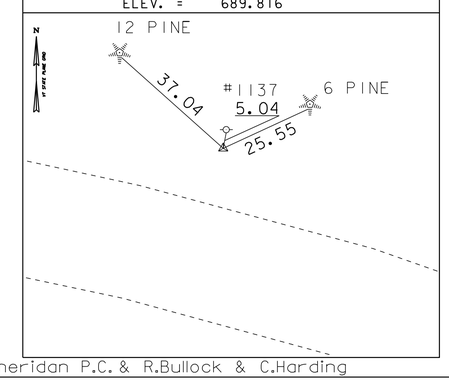

HVCTRL #4

NORTH = 753579.105
EAST = 1621208.200
ELEV. = 654.163

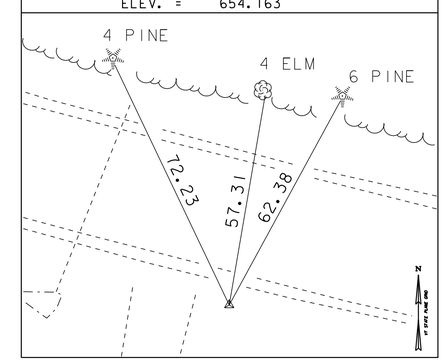

* Main Traverse Completed 02/21/1991 by J.Sheridan P.C. & R.Bullock & C.Harding

ALIGNMENT TIES

HVCTRL #5

NORTH = 753900.160
EAST = 1620279.063
ELEV. = 704.384

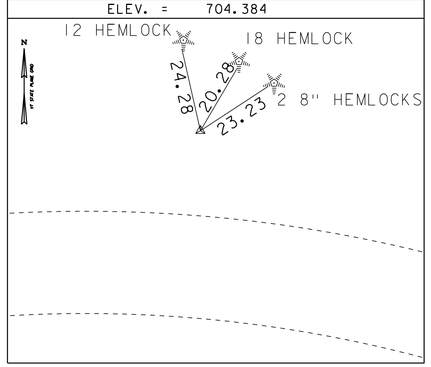

HVCTRL #6

NORTH = 752808.057
EAST = 1620267.491
ELEV. = 670.300

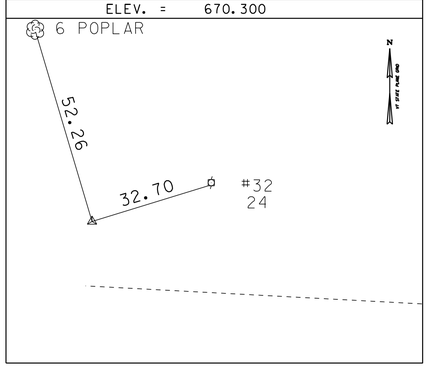

HVCTRL #7

NORTH = 752686.254
EAST = 1621520.555
ELEV. = 659.850

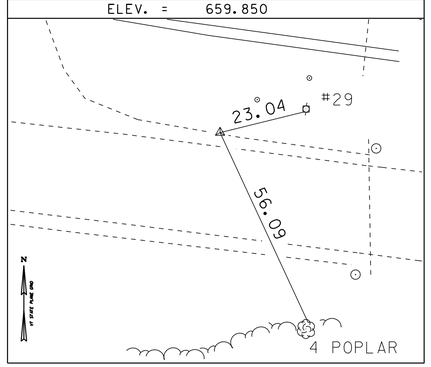

HVCTRL #8

NORTH = 752519.143
EAST = 1622511.807
ELEV. = 673.805

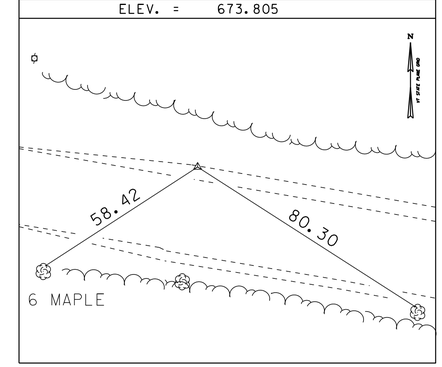

HVCTRL #12

NORTH = 752607.359
EAST = 1622017.782
ELEV. = 668.056

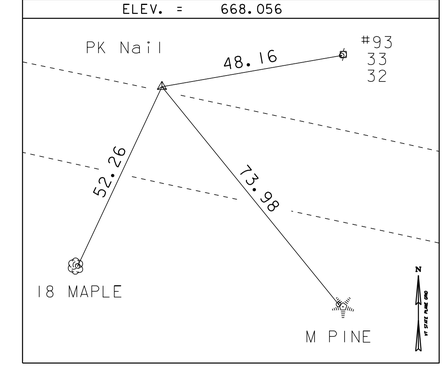

DATUM	
VERTICAL	NGVD 29
HORIZONTAL	NAD 83 (92)
ADJUSTMENT	Compass

PROJECT NAME: Morristown
PROJECT NUMBER: BRS 0240 (3) S

FILE NAME: 78f329\survey\x78f329ti.dgn
PROJECT LEADER: C. CARLSON
DESIGNED BY:
Tie Sheet

PLOT DATE: 16-NOV-2015
DRAWN BY: R. Bullock
CHECKED BY:
SHEET 10 OF 148

TRAVERSE TIES

HVCTRL #13

NORTH = 752462.326
EAST = 1622770.784
ELEV. = 674.349

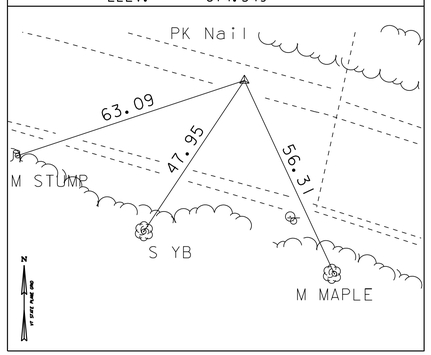

HVCTRL #15

NORTH = 753066.477
EAST = 1623820.799
ELEV. = 687.084

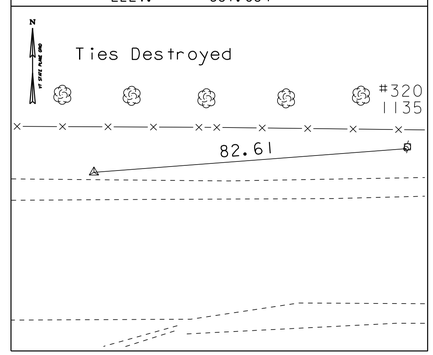

HVCTRL #16

NORTH = 752999.504
EAST = 1624533.083
ELEV. = 673.345

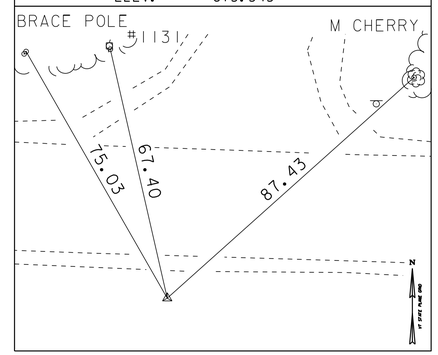

HVCTRL #17

NORTH = 753010.716
EAST = 1625156.699
ELEV. = 663.109

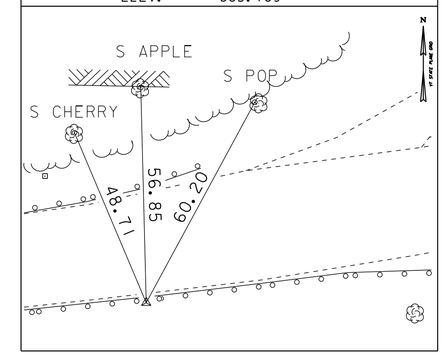

HVCTRL #18

NORTH = 752346.919
EAST = 1622961.854
ELEV. = 670.283

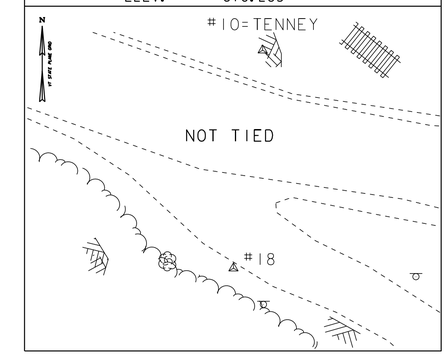

ALIGNMENT TIES

NORTH =
EAST =
ELEV. =

NORTH =
EAST =
ELEV. =

NORTH =
EAST =
ELEV. =

NORTH =
EAST =
ELEV. =

NORTH =
EAST =
ELEV. =

ALIGNMENT TIES

NORTH =
EAST =
ELEV. =

NORTH =
EAST =
ELEV. =

NORTH =
EAST =
ELEV. =

NORTH =
EAST =
ELEV. =

NORTH =
EAST =
ELEV. =

DATUM

VERTICAL NGVD 29

HORIZONTAL NAD 83 (92)

ADJUSTMENT Compass

PROJECT NAME: Morristown

PROJECT NUMBER: BRS 0240 (3)S

FILE NAME: 78f329\survey\x78f329ti.dgn
PROJECT LEADER: C. CARLSON
DESIGNED BY:
Tie Sheet

PLOT DATE: 16-NOV-2015
DRAWN BY: R. Bullock
CHECKED BY:
SHEET 11 OF 148

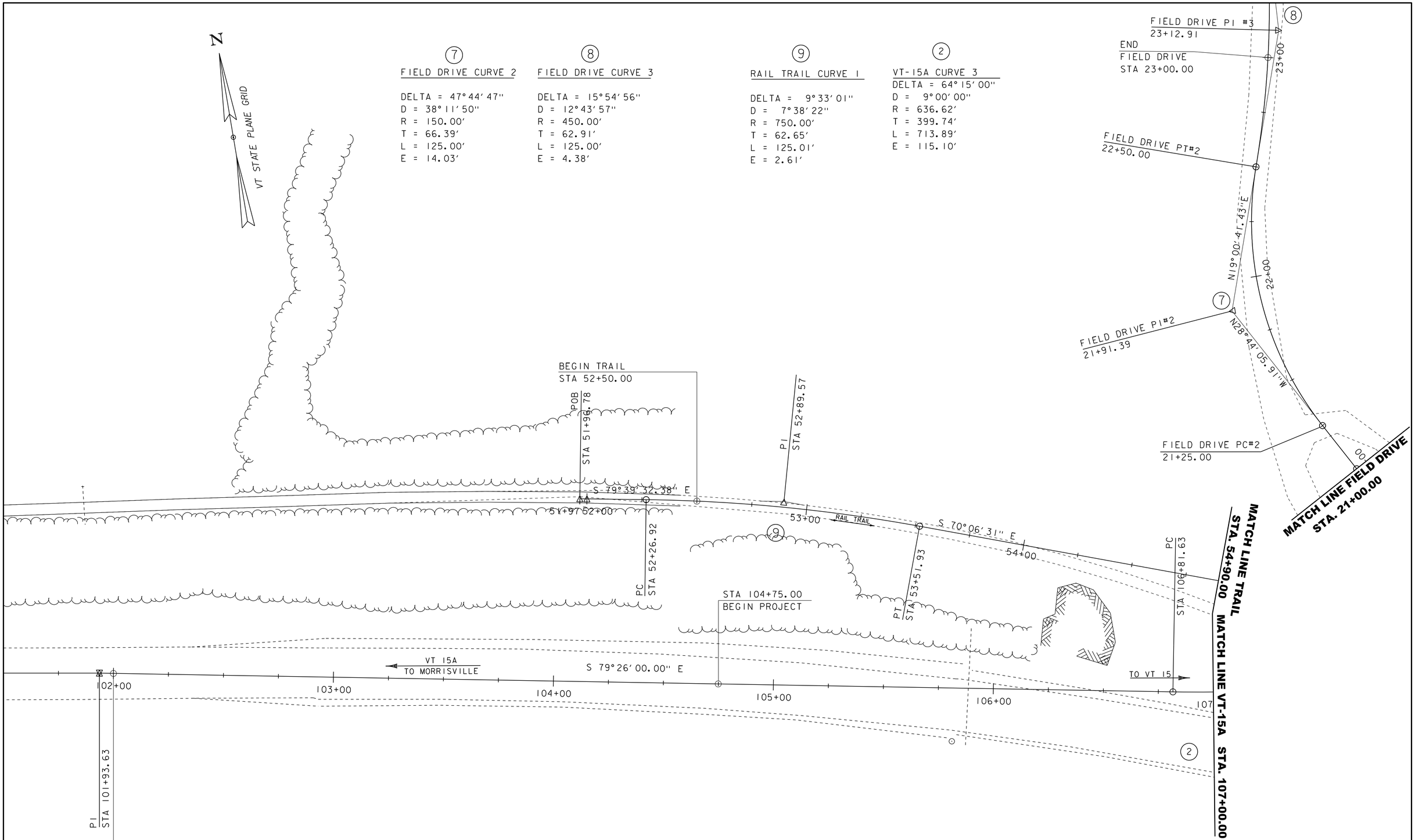

PROJECT NAME:	MORRISTOWN
PROJECT NUMBER:	BRS 0240(3)S

FILE NAME: s78f329alignbdr.dgn	PLOT DATE: 16-NOV-2015
PROJECT LEADER: C. CARLSON	DRAWN BY: J. GRIFFIN
DESIGNED BY: J. GRIFFIN	CHECKED BY: J. LACROIX
VT-15A ALIGNMENT SHEET #1	SHEET 12 OF 148

MATCH LINE TRAIL STA. 54+90.00

MATCH LINE FIELD DRIVE STA. 21+00.00

MATCH LINE VT-15A STA. 107+00.00

MATCH LINE VT-15A STA 112+50.00

FIELD DRIVE PT#1 21+00.00

POE 303+25.00

PC STA 55+02.31

PI STA 55+19.23

PT STA 55+32.06

PI 20+63.30

VT-15A STA 107+40.00

TRAIL STA 55+59.67

Δ = 7°15'0"

FIELD DRIVE PC#1 20+25.00

PC STA 55+98.50

PI STA 56+23.33

PT STA 56+37.60

PC STA 57+05.23

PI STA 57+20.59

PRC STA 57+32.77

PI STA 57+70.27

PRC STA 58+07.21

PI STA 58+66.15

PT STA 59+24.87

VT-15A STA 108+00.00

TH-22 STA 10+00.00

FIELD DRIVE STA 20+00.00

Δ = 90°

BEGIN BRIDGE

STA 108+68.67

F.G. = 663.90

℄ PIER #1

STA 109+00.00

F.G. = 662.92

END BRIDGE

STA 110+91.33

F.G. = 659.73

℄ PIER #2

STA 110+60.00

F.G. = 659.92

VT 15A STA 109+75.00

CHANNEL STA 302+00.00

Δ = 90°

VT 15A TO MORRISVILLE

TO VT 15

N15°50'12.90"W

N0°05'13.51"W

S1°56'13.13"E

S0°05'12.43"E

N 88°27'15" E

S41°37'34.42"E

S31°26'25.12"E

S 37°03'03" E

TH-22 STA 10+60.00

TRAIL STA 56+79.58

Δ = 15°

TH-22 PI#1

10+75.85

TH-22 PT 11+45.00

TH-22 PI#2 11+85.11

TH-22 PT#2 12+25.00

TH-22 POE 13+00.00

END TH-22 STA 12+75.00

POB 300+00.00

END TRAIL STA 59+50.00

LAMOILLE RIVER

PI STA 110+81.36

303+00 302+00 301+00 300+00

55+00 56+00 57+00 58+00 59+00 108+00 109+00 110+00 111+00 112+00

11+00 12+00 13+00

N

VT STATE PLANE GRID

SCALE 1" = 20'-0"

20 0 20

(2) VT-15A CURVE 3

DELTA = 64°15'00"
D = 9°00'00"
R = 636.62'
T = 399.74'
L = 713.89'
E = 115.10'

(6) FIELD DRIVE CURVE 1

DELTA = 28°38'52"
D = 38°11'50"
R = 150.00'
T = 38.30'
L = 75.00'
E = 4.81'

(10) TRAIL CURVE 2

DELTA = 68°10'18"
D = 229°10'59"
R = 25.00'
T = 16.92'
L = 29.75'
E = 5.19'

(11) TRAIL CURVE 3

DELTA = 89°36'32"
D = 229°10'59"
R = 25.00'
T = 24.83'
L = 39.10'
E = 10.24'

(12) TRAIL CURVE 4

DELTA = 63°07'53"
D = 229°10'59"
R = 25.00'
T = 15.36'
L = 27.17
E = 3.34'

TRAIL CURVE DATA (13)

TRAIL CURVE 5

DELTA = 17°03'31"
D = 22°55'05"
R = 250.00'
T = 15.36'
L = 37.49
E = 2.80'

TRAIL CURVE DATA (14)

TRAIL CURVE 6

DELTA = 8°25'37"
D = 7°09'43"
R = 800.00'
T = 58.94'
L = 117.66
E = 2.17'

TH-22 CURVE DATA

(4) TH-22 CURVE 1

DELTA = 41°32'22"
D = 28°38'52"
R = 200.00'
T = 75.85'
L = 145.00'
E = 13.90'

(5) TH-22 CURVE 2

DELTA = 10°11'09"
D = 12°43'57"
R = 450.00'
T = 40.11'
L = 80.00'
E = 1.78'

PROJECT NAME: MORRISTOWN	
PROJECT NUMBER: BRS 0240(3)S	
FILE NAME: s78f329alignbdr.dgn	PLOT DATE: 16-NOV-2015
PROJECT LEADER: C. CARLSON	DRAWN BY: J. GRIFFIN
DESIGNED BY: J. GRIFFIN	CHECKED BY: J. LACROIX
VT-15A ALIGNMENT SHEET #2	SHEET 13 OF 148

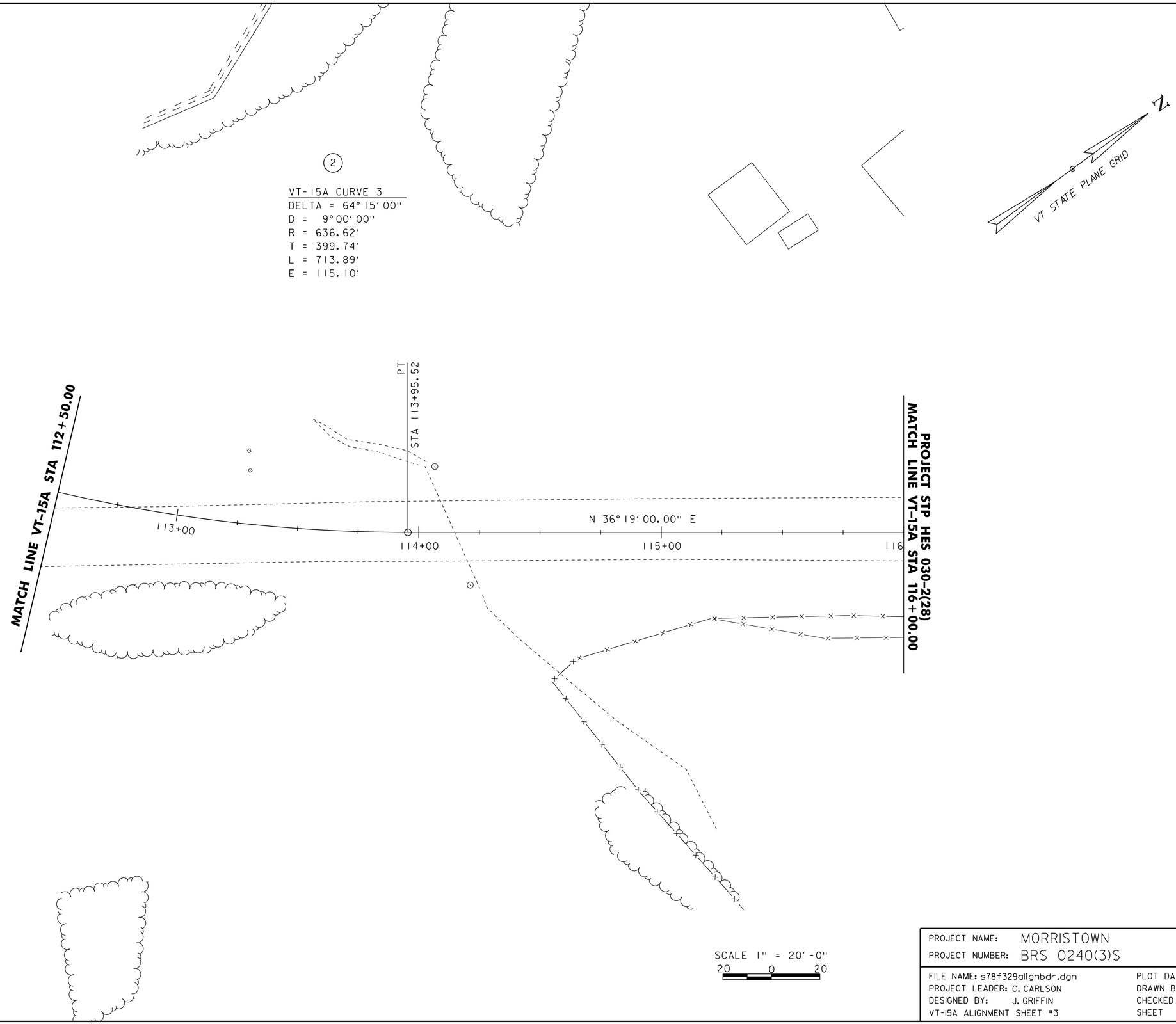

PROJECT NAME: MORRISTOWN	
PROJECT NUMBER: BRS 0240(3)S	
FILE NAME: s78f329alignbdr.dgn	PLOT DATE: 16-NOV-2015
PROJECT LEADER: C. CARLSON	DRAWN BY: J. GRIFFIN
DESIGNED BY: J. GRIFFIN	CHECKED BY: J. LACROIX
VT-15A ALIGNMENT SHEET #3	SHEET 14 OF 148

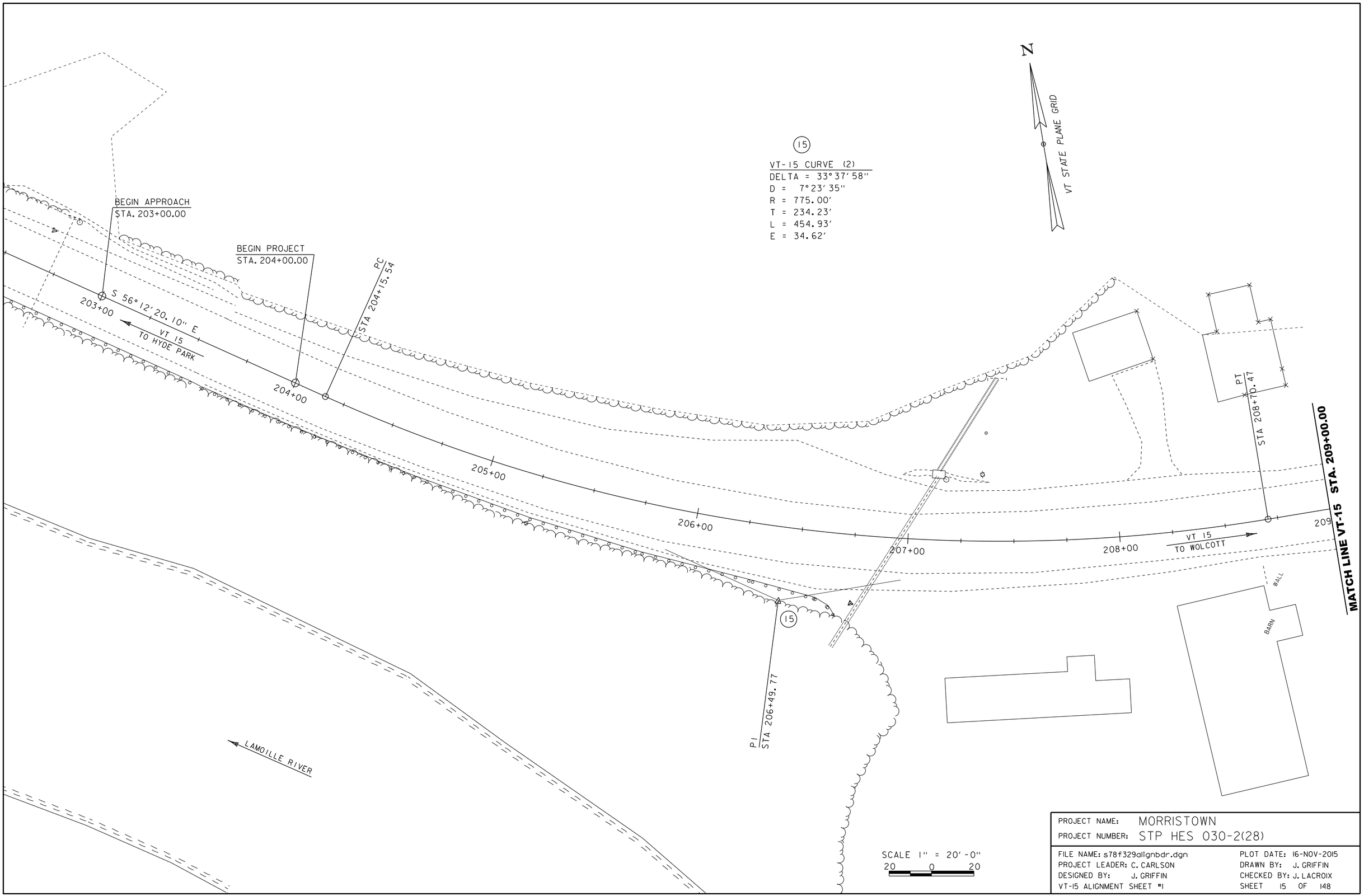

PROJECT NAME: MORRISTOWN	
PROJECT NUMBER: STP HES 030-2(28)	
FILE NAME: s78f329alignbdr.dgn	PLOT DATE: 16-NOV-2015
PROJECT LEADER: C. CARLSON	DRAWN BY: J. GRIFFIN
DESIGNED BY: J. GRIFFIN	CHECKED BY: J. LACROIX
VT-15 ALIGNMENT SHEET #1	SHEET 15 OF 148

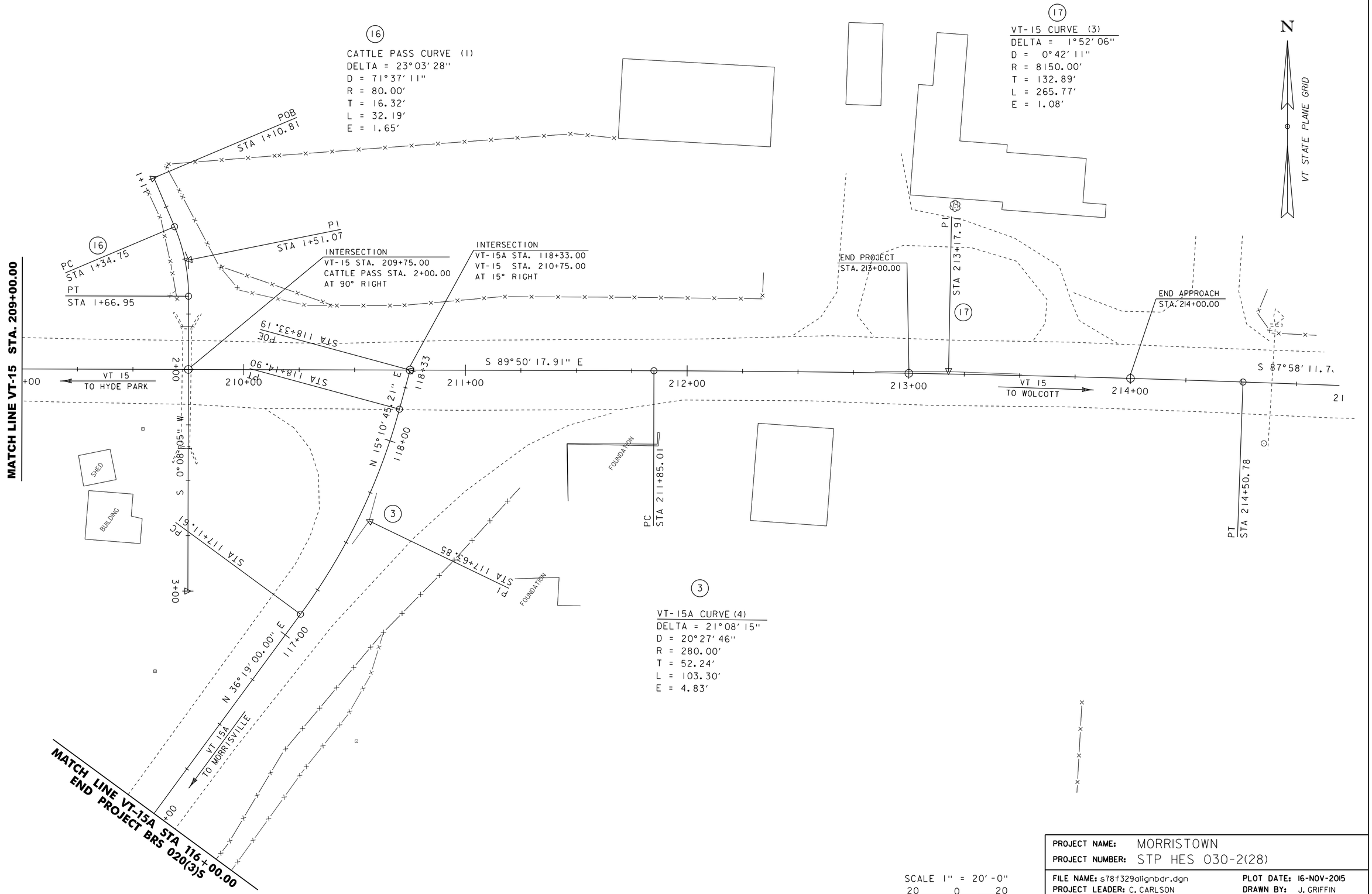

PROJECT NAME: MORRISTOWN	
PROJECT NUMBER: STP HES 030-2(28)	
FILE NAME: s78f329alignbdr.dgn	PLOT DATE: 16-NOV-2015
PROJECT LEADER: C. CARLSON	DRAWN BY: J. GRIFFIN
DESIGNED BY: J. GRIFFIN	CHECKED BY: J. LACROIX
VT-15 ALIGNMENT SHEET #2	SHEET 16 OF 148

BOX BEAM GUARDRAIL
STA. 104+28.32 - STA. 107+00 LT

COLD PLANNING, BITUMINOUS PAYMENT
STA. 102+00.00 - STA. 103+75.00

STONE FILL, TYPE II
VT-15A
STA. 102+75.30 RT - STA. 107+00.00 RT
TRAIL
STA. 53+25.00 LT - STA. 54+90.00 LT

CHAIN-LINK FENCE, 4 FEET
TRAIL
STA. 53+25.00 LT - STA. 54+90.00 LT

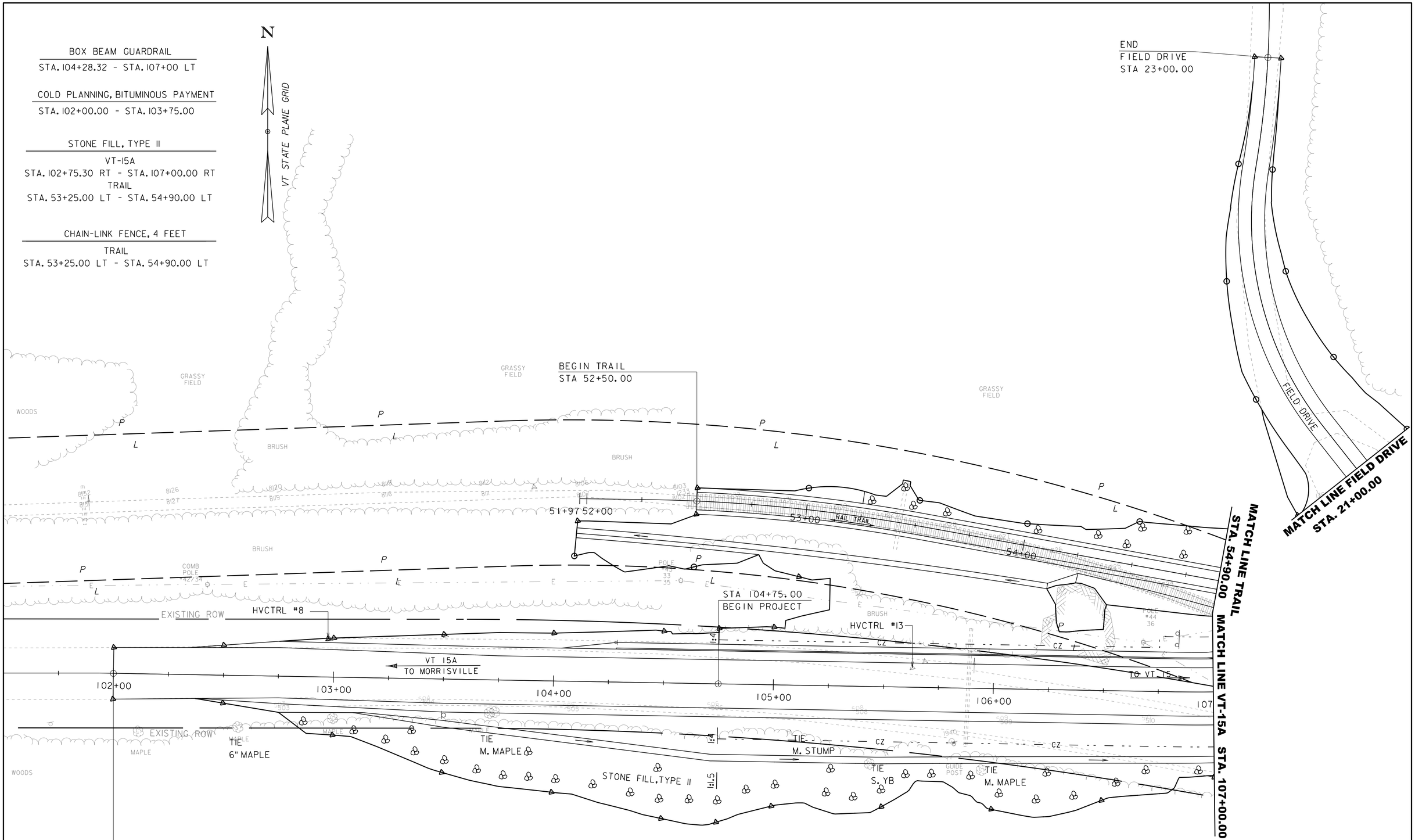

PROJECT NAME: MORRISTOWN	
PROJECT NUMBER: BRS 0240(3)S	
FILE NAME: s78f329bdr.dgn	PLOT DATE: 16-NOV-2015
PROJECT LEADER: C. CARLSON	DRAWN BY:
DESIGNED BY: J. GRIFFIN	CHECKED BY: J. LACROIX
VT-15A LAYOUT #1	SHEET 17 OF 148

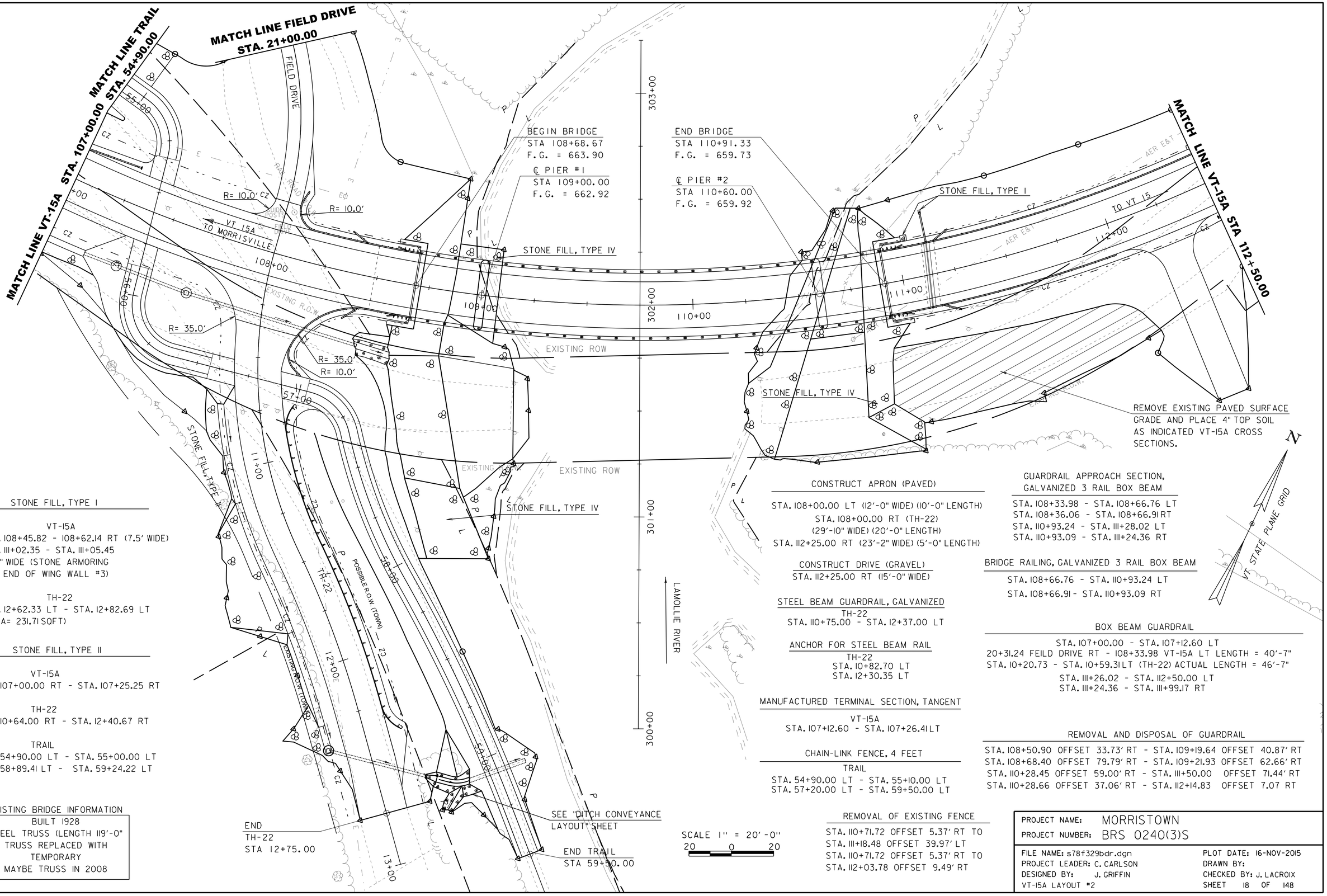

STONE FILL, TYPE I

VT-15A
STA. 108+45.82 - 108+62.14 RT (7.5' WIDE)
STA. 111+02.35 - STA. 111+05.45
3'-0" WIDE (STONE ARMORING
FOR END OF WING WALL #3)

TH-22
STA. 12+62.33 LT - STA. 12+82.69 LT
(AREA= 231.71 SQFT)

STONE FILL, TYPE II

VT-15A
STA. 107+00.00 RT - STA. 107+25.25 RT

TH-22
STA. 10+64.00 RT - STA. 12+40.67 RT

TRAIL
STA. 54+90.00 LT - STA. 55+00.00 LT
STA. 58+89.41 LT - STA. 59+24.22 LT

EXISTING BRIDGE INFORMATION

BUILT 1928
STEEL TRUSS (LENGTH 119'-0"
TRUSS REPLACED WITH
TEMPORARY
MAYBE TRUSS IN 2008

SCALE 1" = 20'-0"
20 0 20

CONSTRUCT APRON (PAVED)

STA. 108+00.00 LT (12'-0" WIDE) (10'-0" LENGTH)
STA. 108+00.00 RT (TH-22)
(29'-10" WIDE) (20'-0" LENGTH)
STA. 112+25.00 RT (23'-2" WIDE) (5'-0" LENGTH)

CONSTRUCT DRIVE (GRAVEL)

STA. 112+25.00 RT (15'-0" WIDE)

STEEL BEAM GUARDRAIL, GALVANIZED

TH-22
STA. 110+75.00 - STA. 12+37.00 LT

ANCHOR FOR STEEL BEAM RAIL

TH-22
STA. 10+82.70 LT
STA. 12+30.35 LT

MANUFACTURED TERMINAL SECTION, TANGENT

VT-15A
STA. 107+12.60 - STA. 107+26.41 LT

CHAIN-LINK FENCE, 4 FEET

TRAIL
STA. 54+90.00 LT - STA. 55+10.00 LT
STA. 57+20.00 LT - STA. 59+50.00 LT

REMOVAL OF EXISTING FENCE

STA. 110+71.72 OFFSET 5.37' RT TO
STA. 111+18.48 OFFSET 39.97' LT
STA. 110+71.72 OFFSET 5.37' RT TO
STA. 112+03.78 OFFSET 9.49' RT

GUARDRAIL APPROACH SECTION, GALVANIZED 3 RAIL BOX BEAM

STA. 108+33.98 - STA. 108+66.76 LT
STA. 108+36.06 - STA. 108+66.91 RT
STA. 110+93.24 - STA. 111+28.02 LT
STA. 110+93.09 - STA. 111+24.36 RT

BRIDGE RAILING, GALVANIZED 3 RAIL BOX BEAM

STA. 108+66.76 - STA. 110+93.24 LT
STA. 108+66.91 - STA. 110+93.09 RT

BOX BEAM GUARDRAIL

STA. 107+00.00 - STA. 107+12.60 LT
20+31.24 FEILD DRIVE RT - 108+33.98 VT-15A LT LENGTH = 40'-7"
STA. 10+20.73 - STA. 10+59.31 LT (TH-22) ACTUAL LENGTH = 46'-7"
STA. 111+26.02 - STA. 112+50.00 LT
STA. 111+24.36 - STA. 111+99.17 RT

REMOVAL AND DISPOSAL OF GUARDRAIL

STA. 108+50.90 OFFSET 33.73' RT - STA. 109+19.64 OFFSET 40.87' RT
STA. 108+68.40 OFFSET 79.79' RT - STA. 109+21.93 OFFSET 62.66' RT
STA. 110+28.45 OFFSET 59.00' RT - STA. 111+50.00 OFFSET 71.44' RT
STA. 110+28.66 OFFSET 37.06' RT - STA. 112+14.83 OFFSET 7.07 RT

PROJECT NAME: MORRISTOWN	
PROJECT NUMBER: BRS 0240(3)S	
FILE NAME: s78f329bdr.dgn	PLOT DATE: 16-NOV-2015
PROJECT LEADER: C. CARLSON	DRAWN BY:
DESIGNED BY: J. GRIFFIN	CHECKED BY: J. LACROIX
VT-15A LAYOUT #2	SHEET 18 OF 148

REMOVING AND RESETTING FENCE

STA. 115+22.00 - STA. 116+00.00 RT

STONE FILL, TYPE I

STA. 113+78.95 - STA. 113+78.95 LT (6.5' X 3.25')
STA. 114+27.63 - STA. 114+32.89 RT (4.5' X 3.25')
STA. 115+02.91 - STA. 115+14.10 LT (3.0' WIDE)
STA. 115+59.30 - STA. 115+95.08 LT (4.5' WIDE)

BOX BEAM GUARDRAIL

STA. 112+50.00 - STA. 115+01.35 LT
STA. 112+62.51 - STA. 113+40.23 RT
STA. 113+90.76 - STA. 116+00.00 RT
STA. 115+65.47 - STA. 116+00.00 LT

CONSTRUCT APRON (PAVED)

STA. 113+75.00 RT (23'-0" WIDE) (5'-0" LENGTH)
STA. 115+25.00 LT (28'-5" WIDE) (5'-0" LENGTH)

CONSTRUCT DRIVE (GRAVEL)

STA. 113+75.00 RT (15'-0" WIDE)
STA. 115+25.00 LT (15'-0" WIDE)

MANUFACTURED TERMINAL SECTION, TANGENT

STA. 112+49.39 - STA. 112+62.51 RT
STA. 113+77.10 - STA. 113+90.76 RT

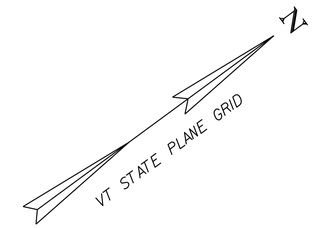

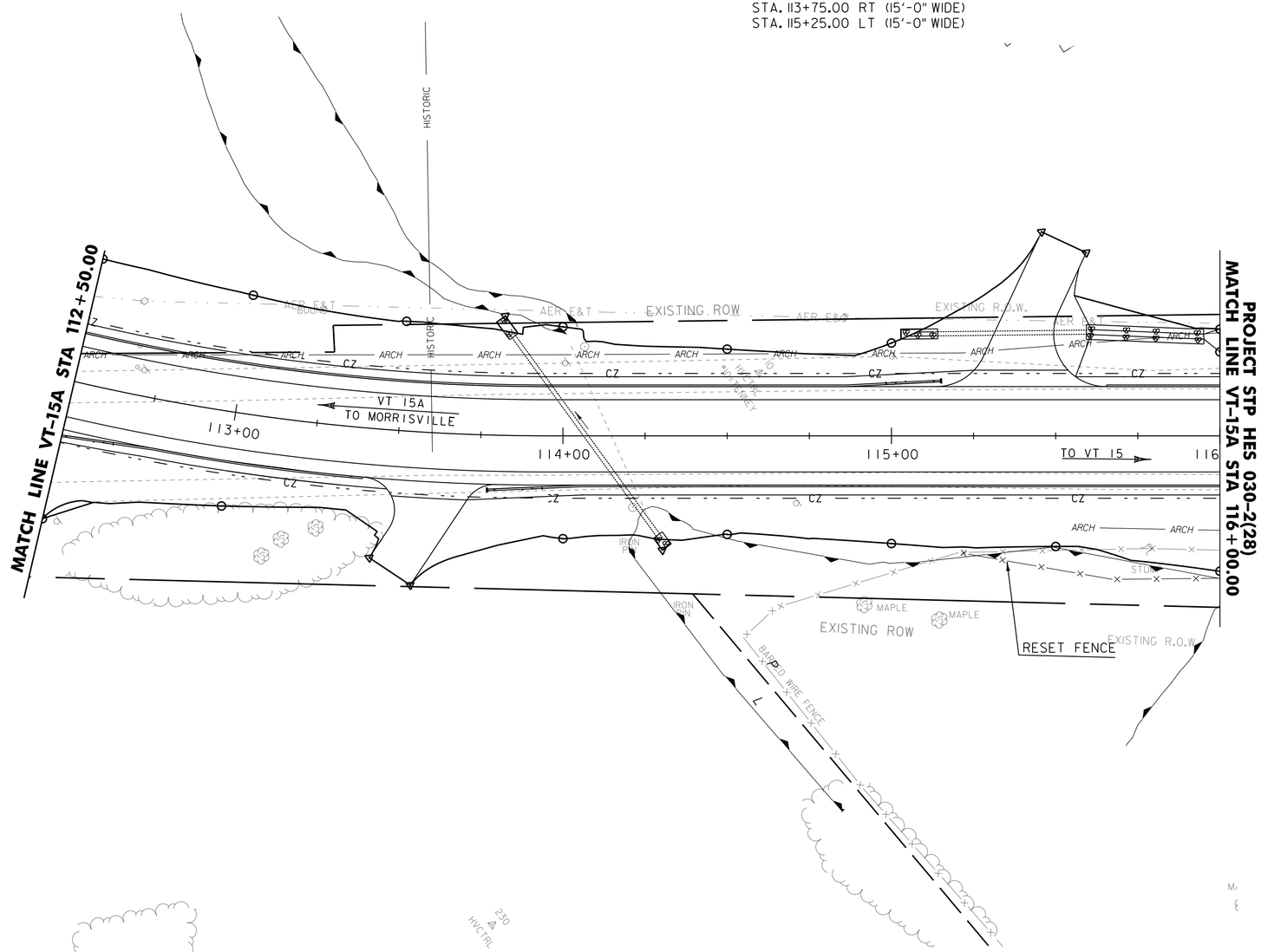

SCALE 1" = 20'-0"
20 0 20

PROJECT NAME: MORRISTOWN	
PROJECT NUMBER: BRS 0240(3)S	
FILE NAME: s78f329bdr.dgn	PLOT DATE: 16-NOV-2015
PROJECT LEADER: C. CARLSON	DRAWN BY:
DESIGNED BY: J. GRIFFIN	CHECKED BY: J. LACROIX
VT-15A LAYOUT #3	SHEET 19 OF 148

REMOVAL AND DISPOSAL OF GUARDRAIL

STA. 203+00.00 OFFSET 19.35' RT - STA. 206+69.06 OFFSET 39.08' RT

STEEL BEAM GUARDRAIL, GALVANIZED W/ 8 FEET POSTS

STA. 203+00.00 - STA. 206+16.24 RT

COLD PLANING, BITUMINOUS PAVEMENT

STA. 203+00.00 - STA. 203+50.00

MANUFACTURED TERMINAL SECTION, TANGENT

STA. 208+80.68 - STA. 209+00.00 LT
STA. 206+16.24 - STA. 206+65.17 RT

CONSTRUCT DRIVE (PAVED)

STA. 208+21.00 LT (12'-0" WIDE) (25'-9" LENGTH)

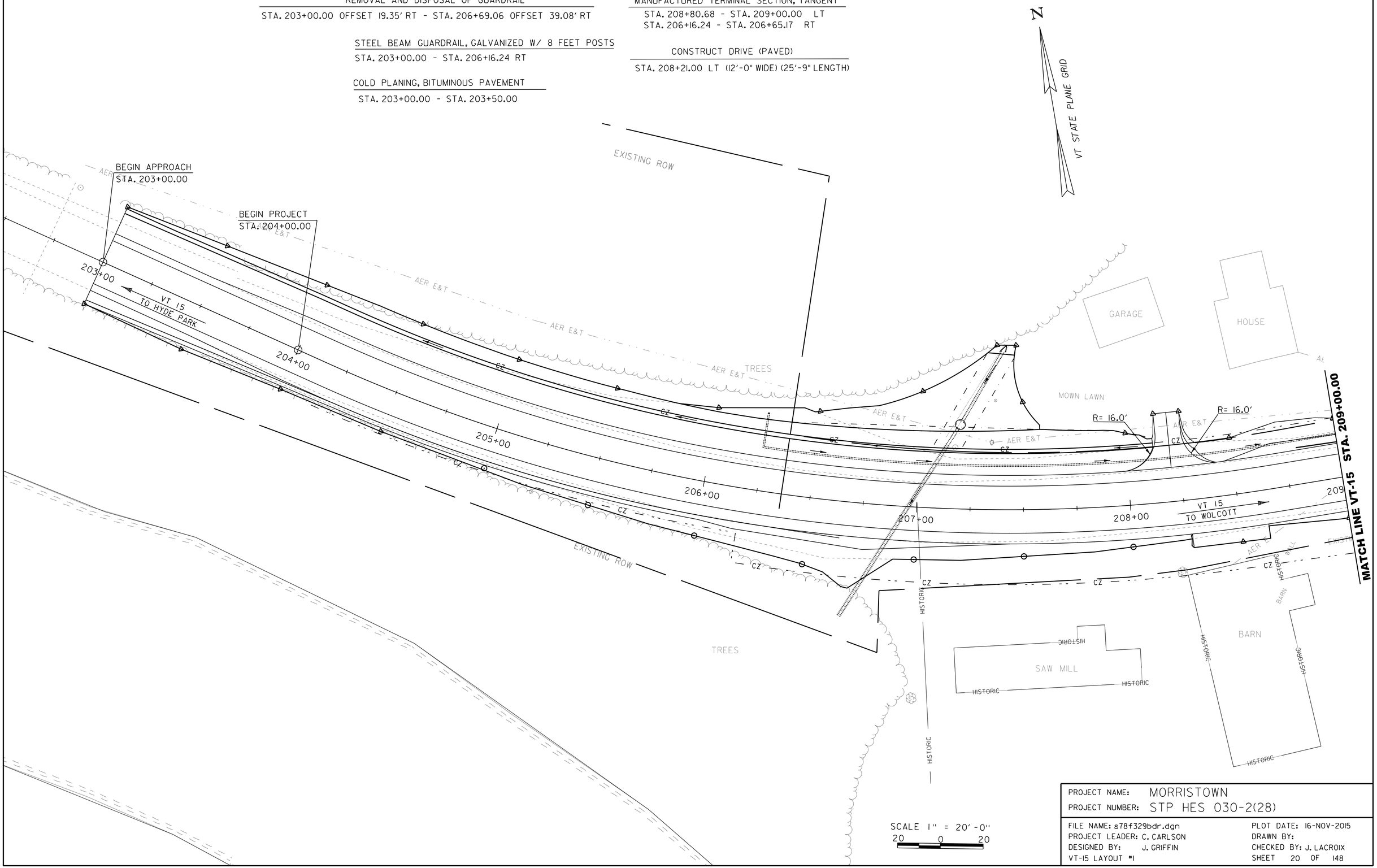

SCALE 1" = 20'-0"
20 0 20

PROJECT NAME: MORRISTOWN	
PROJECT NUMBER: STP HES 030-2(28)	
FILE NAME: s78f329bdr.dgn	PLOT DATE: 16-NOV-2015
PROJECT LEADER: C. CARLSON	DRAWN BY:
DESIGNED BY: J. GRIFFIN	CHECKED BY: J. LACROIX
VT-15 LAYOUT #1	SHEET 20 OF 148

REMOVING AND RESETTING FENCE
STA. 209+66.00 - STA. 209+69.25 LT
STA. 209+88.65 - STA. 210+40.41 LT
STA. 116+00.00 - STA. 117+25.22 RT

STEEL BEAM GUARDRAIL, GALVANIZED/NESTED
STA. 209+30.68 - STA. 210+18.18 LT

MANUFACTURED TERMINAL SECTION, TANGENT
STA. 209+00.00 - STA. 209+30.68 LT (VT-15)
STA. 210+18.18 - STA. 210+68.18 LT (VT-15)
STA. 116+92.01 - STA. 117+06.28 LT (VT-15A)

BOX BEAM GUARDRAIL
STA. 116+00.00 - STA. 116+92.91 LT (VT-15A)
STA. 116+00.00 - STA. 117+55.85 RT (VT-15A)

PRECAST CONCRETE STRUCTURE (8'-0" X 6'-0" X 64'-0")
STA. 209+75.00 OFFSET 21'-0" LT
STA. 209+75.00 OFFSET 43'-0" RT

CONSTRUCT DRIVE (PAVED)
STA. 213+00.00 RT (15'-0" WIDE) (11'-9" LENGTH)
STA. 213+69.00 LT (17'-3" WIDE) (8'-9" LENGTH)
STA. 212+68.00 LT (15'-11" WIDE) (9'-8" LENGTH)

COLD PLANING, BITUMINOUS PAVEMENT
STA. 213+50.00 - STA. 214+00.00

N
VT STATE PLANE GRID

MATCH LINE VT-15 STA. 209+00.00

INTERSECTION
VT-15A STA. 118+33.00
VT-15 STA. 210+75.00
AT 15° RIGHT

END PROJECT
STA. 213+00.00

END APPROACH
STA. 214+00.00

RESET FENCE

R= 16.0'
R= 10.0'
R= 90.0'
R= 150.0'
R= 300.0'

VT 15
TO HYDE PARK

VT 15
TO WOLCOTT

VT 15A
TO MORRISVILLE

REMOVE EXISTING SURFACE
AND PLACE WITH 4" TOP SOIL
AS INDICATED IN CROSS
SECTION 118+00.00

RESET FENCE

MATCH LINE VT-15A STA 116+00.00
END PROJECT BRS 020(3)S

BARBED WIRE FENCE
MOWN LAWN
BARN
HOUSE
EXISTING R.O.W.
WOOD FENCE
AER E&T
HVCTRL
EXISTING ROW
SHED
BDLG
GARAGE
GRASS FIELD
BOUND
IRON PIN
MILEMARKER
CZ
P
L

SCALE 1" = 20'-0"
20 0 20

PROJECT NAME: MORRISTOWN	
PROJECT NUMBER: STP HES 030-2(28)	
FILE NAME: s78f329bdr.dgn	PLOT DATE: 16-NOV-2015
PROJECT LEADER: C. CARLSON	DRAWN BY:
DESIGNED BY: J. GRIFFIN	CHECKED BY: J. LACROIX
VT-15 LAYOUT #2	SHEET 21 OF 148

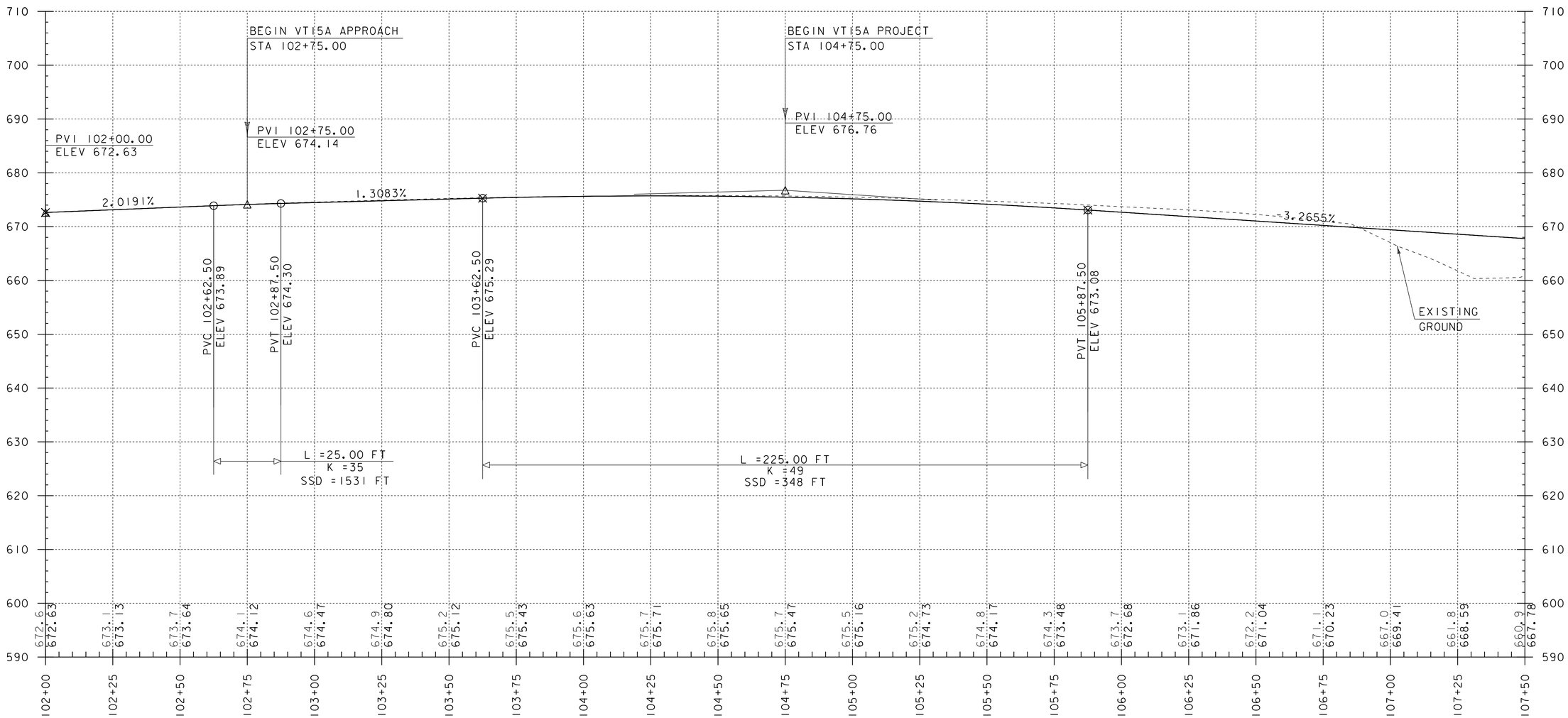

VT-15A PROFILE #1

HOR. SCALE 1" = 20'-0"
VER. SCALE 1" = 10'-0"

THE GRADES SHOWN TO THE NEAREST TENTH ARE THE ORIGINAL GROUND ELEVATIONS ALONG THE PROPOSED ALIGNMENT.

THE GRADES SHOWN TO THE NEAREST HUNDREDTH ARE THE FINISH GRADES ALONG THE PROPOSED ALIGNMENT.

PROJECT NAME: MORRISTOWN	
PROJECT NUMBER: BRS 0240(3)S	
FILE NAME: s78f329pro.dgn	PLOT DATE: 16-NOV-2015
PROJECT LEADER: C. CARLSON	DRAWN BY:
DESIGNED BY: J. GRIFFIN	CHECKED BY: J. LACROIX
VT-15A PROFILE 1	SHEET 22 OF 148

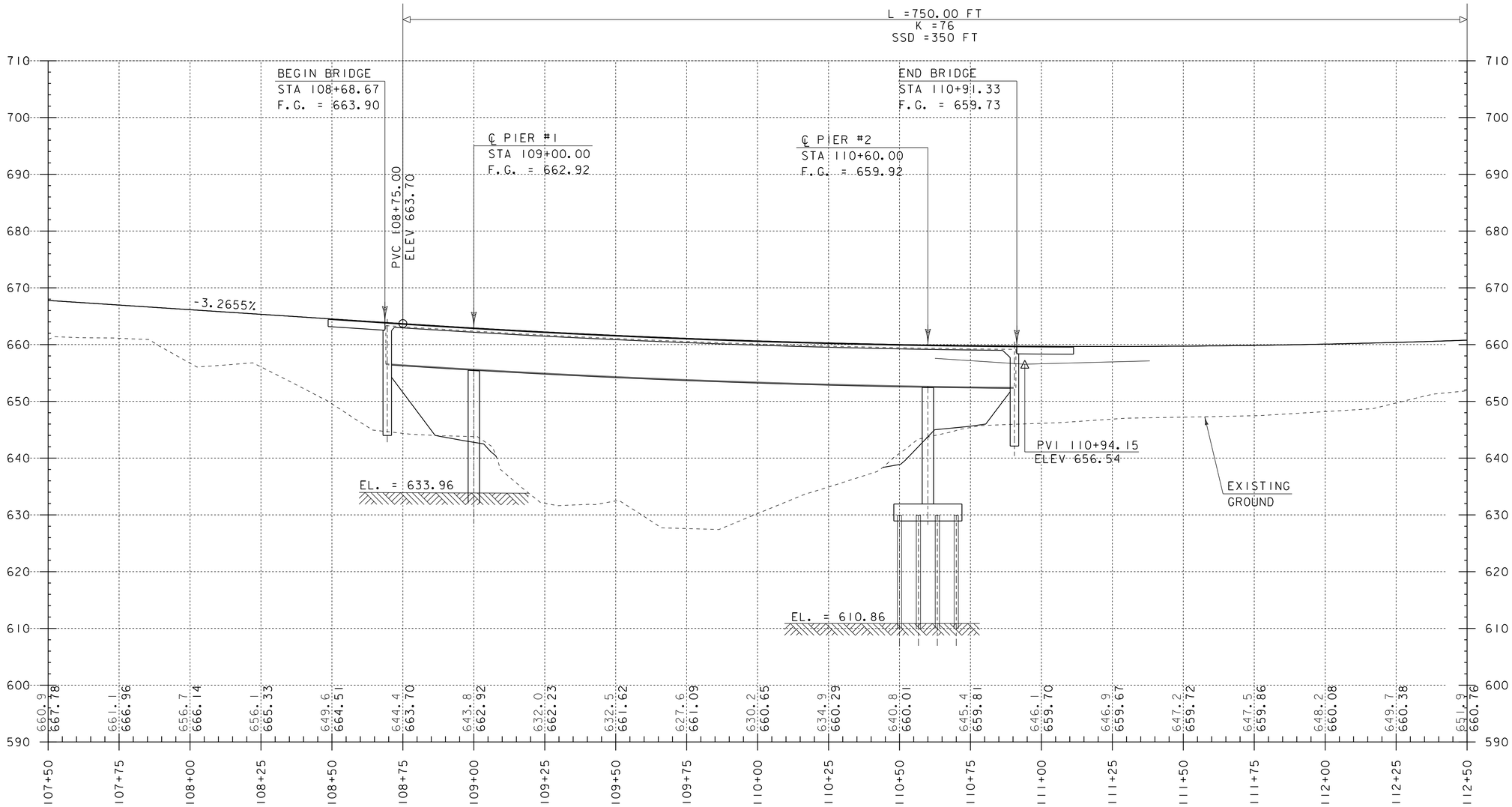

VT-15A PROFILE #2

HOR. SCALE 1" = 20'-0"
VER. SCALE 1" = 10'-0"

THE GRADES SHOWN TO THE NEAREST TENTH ARE THE ORIGINAL GROUND ELEVATIONS ALONG THE PROPOSED ALIGNMENT.

THE GRADES SHOWN TO THE NEAREST HUNDREDTH ARE THE FINISH GRADES ALONG THE PROPOSED ALIGNMENT.

PROJECT NAME: MORRISTOWN	
PROJECT NUMBER: BRS 0240(3)S	
FILE NAME: s78f329pro.dgn	PLOT DATE: 16-NOV-2015
PROJECT LEADER: C. CARLSON	DRAWN BY:
DESIGNED BY: J. GRIFFIN	CHECKED BY: J. LACROIX
VT-15A PROFILE 2	SHEET 23 OF 148

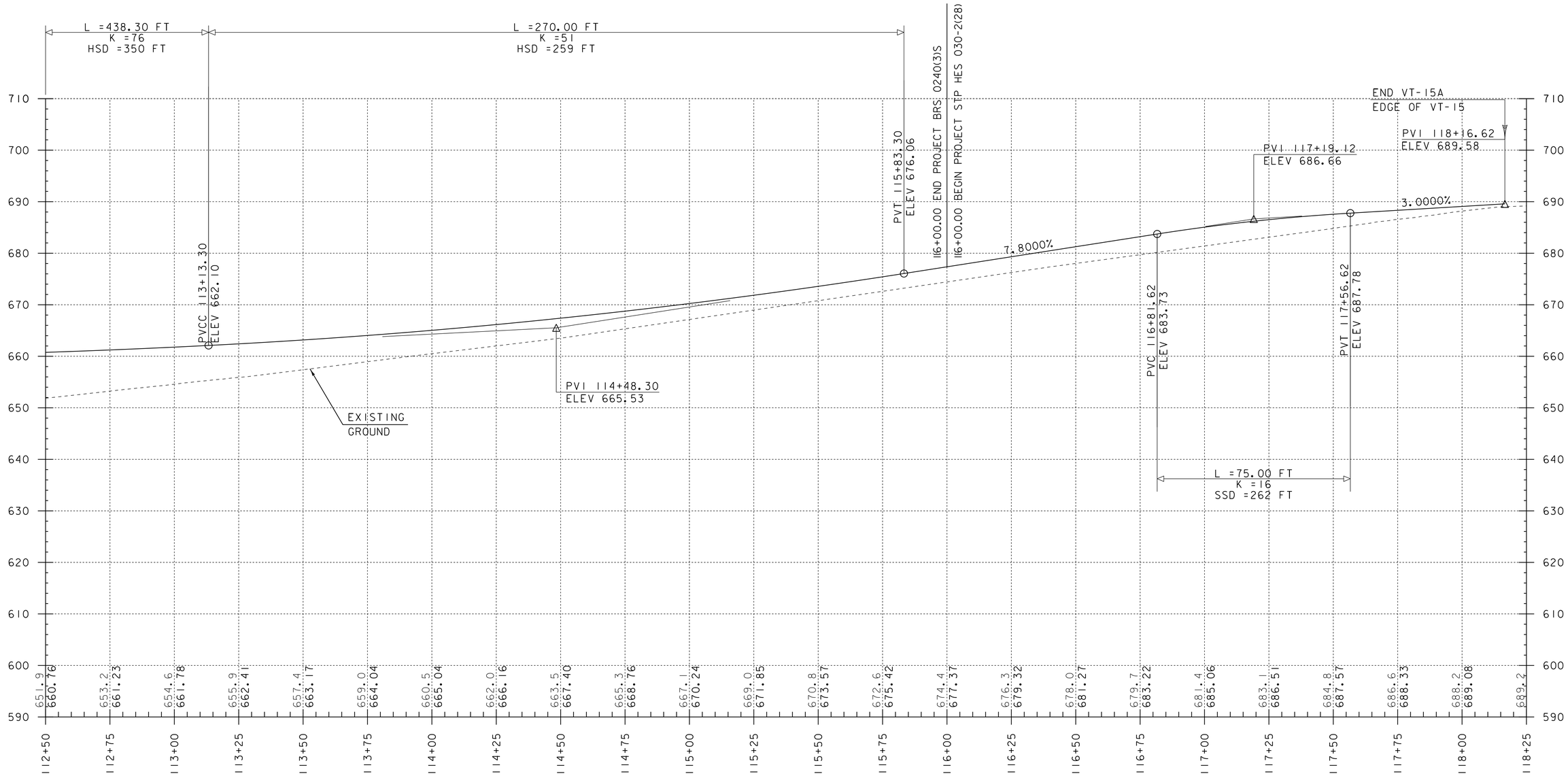

VT-15A PROFILE #3

HOR. SCALE 1" = 20'-0"
VER. SCALE 1" = 10'-0"

THE GRADES SHOWN TO THE NEAREST TENTH ARE THE ORIGINAL GROUND ELEVATIONS ALONG THE PROPOSED ALIGNMENT.

THE GRADES SHOWN TO THE NEAREST HUNDREDTH ARE THE FINISH GRADES ALONG THE PROPOSED ALIGNMENT.

PROJECT NAME: MORRISTOWN	
PROJECT NUMBER: BRS 0240(3)S	
FILE NAME: s78f329pro.dgn	PLOT DATE: 16-NOV-2015
PROJECT LEADER: C. CARLSON	DRAWN BY:
DESIGNED BY: J. GRIFFIN	CHECKED BY: J. LACROIX
VT-15A PROFILE 3	SHEET 24 OF 148

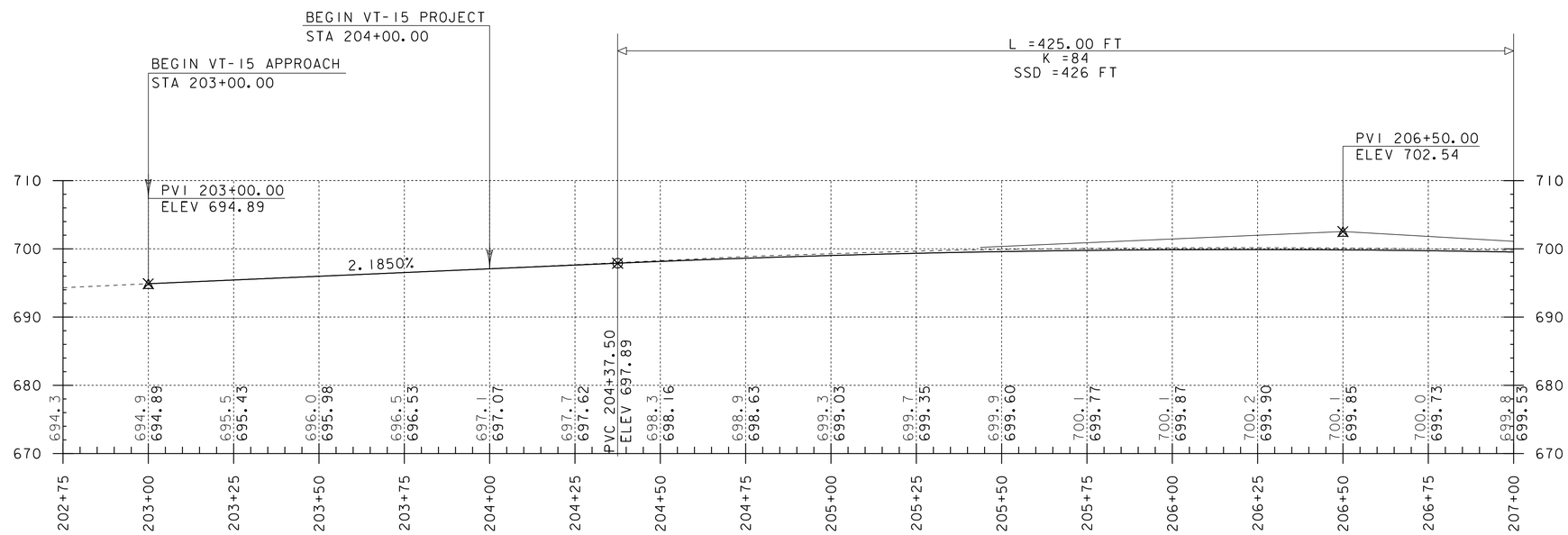

VT-15 MAIN PROFILE SHEET #1

HOR. SCALE 1" = 20'-0"
VER. SCALE 1" = 10'-0"

THE GRADES SHOWN TO THE NEAREST TENTH ARE THE ORIGINAL GROUND ELEVATIONS ALONG THE PROPOSED ALIGNMENT.

THE GRADES SHOWN TO THE NEAREST HUNDREDTH ARE THE FINISH GRADES ALONG THE PROPOSED ALIGNMENT.

PROJECT NAME: MORRISTOWN	
PROJECT NUMBER: STP HES 030-2(28)	
FILE NAME: s78f329pro.dgn	PLOT DATE: 16-NOV-2015
PROJECT LEADER: C. CARLSON	DRAWN BY:
DESIGNED BY: J. GRIFFIN	CHECKED BY: J. LACROIX
VT-15 PROFILE 1	SHEET 25 OF 148

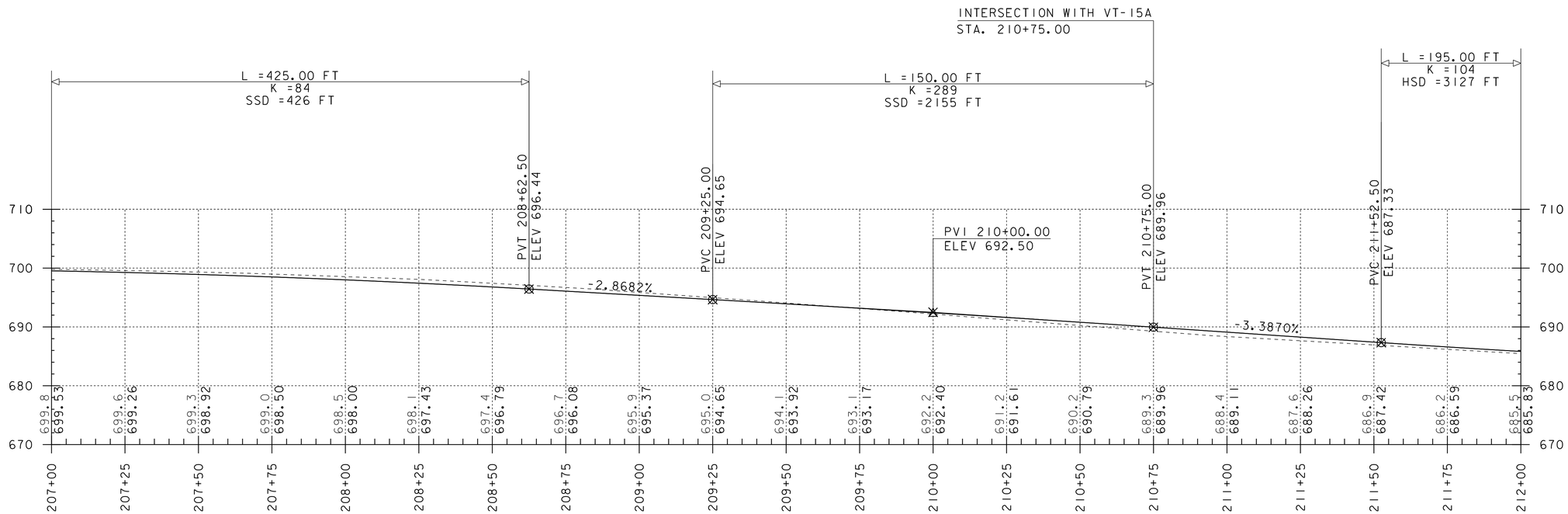

VT-15 MAIN PROFILE SHEET #2

HOR. SCALE 1" = 20'-0"
VER. SCALE 1" = 10'-0"

THE GRADES SHOWN TO THE NEAREST TENTH ARE THE ORIGINAL GROUND ELEVATIONS ALONG THE PROPOSED ALIGNMENT.

THE GRADES SHOWN TO THE NEAREST HUNDREDTH ARE THE FINISH GRADES ALONG THE PROPOSED ALIGNMENT.

PROJECT NAME: MORRISTOWN	
PROJECT NUMBER: STP HES 030-2(28)	
FILE NAME: s78f329pro.dgn	PLOT DATE: 16-NOV-2015
PROJECT LEADER: C. CARLSON	DRAWN BY:
DESIGNED BY: J. GRIFFIN	CHECKED BY: J. LACROIX
VT-15 PROFILE 2	SHEET 26 OF 148

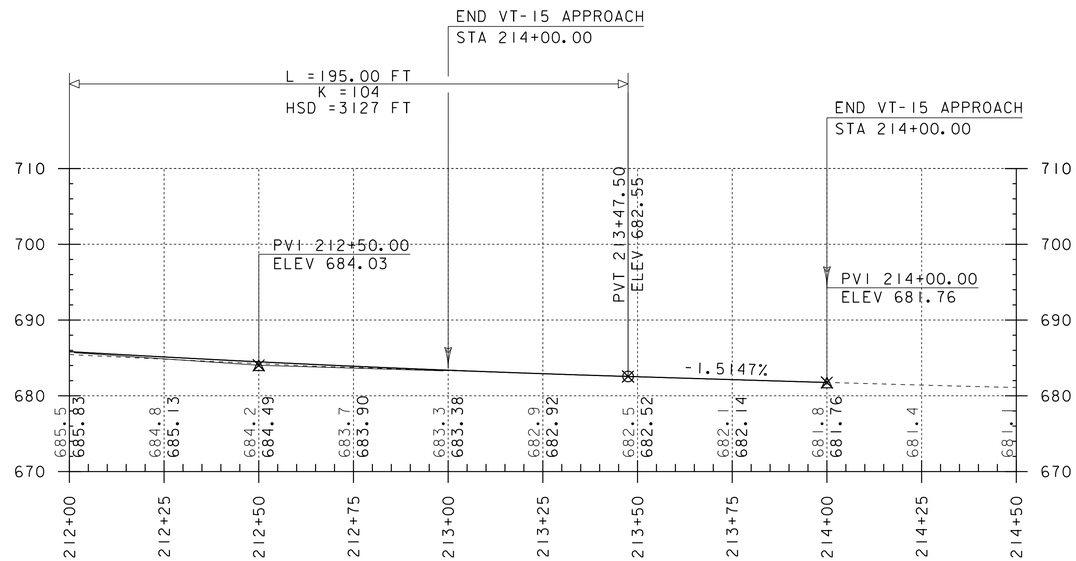

VT-15 MAIN PROFILE SHEET #3

HOR. SCALE 1" = 20'-0"
VER. SCALE 1" = 10'-0"

THE GRADES SHOWN TO THE NEAREST TENTH ARE THE ORIGINAL GROUND ELEVATIONS ALONG THE PROPOSED ALIGNMENT.

THE GRADES SHOWN TO THE NEAREST HUNDREDTH ARE THE FINISH GRADES ALONG THE PROPOSED ALIGNMENT.

PROJECT NAME: MORRISTOWN	
PROJECT NUMBER: STP HES 030-2(28)	
FILE NAME: s78f329pro.dgn	PLOT DATE: 16-NOV-2015
PROJECT LEADER: C. CARLSON	DRAWN BY:
DESIGNED BY: J. GRIFFIN	CHECKED BY: J. LACROIX
VT-15 PROFILE 3	SHEET 27 OF 148

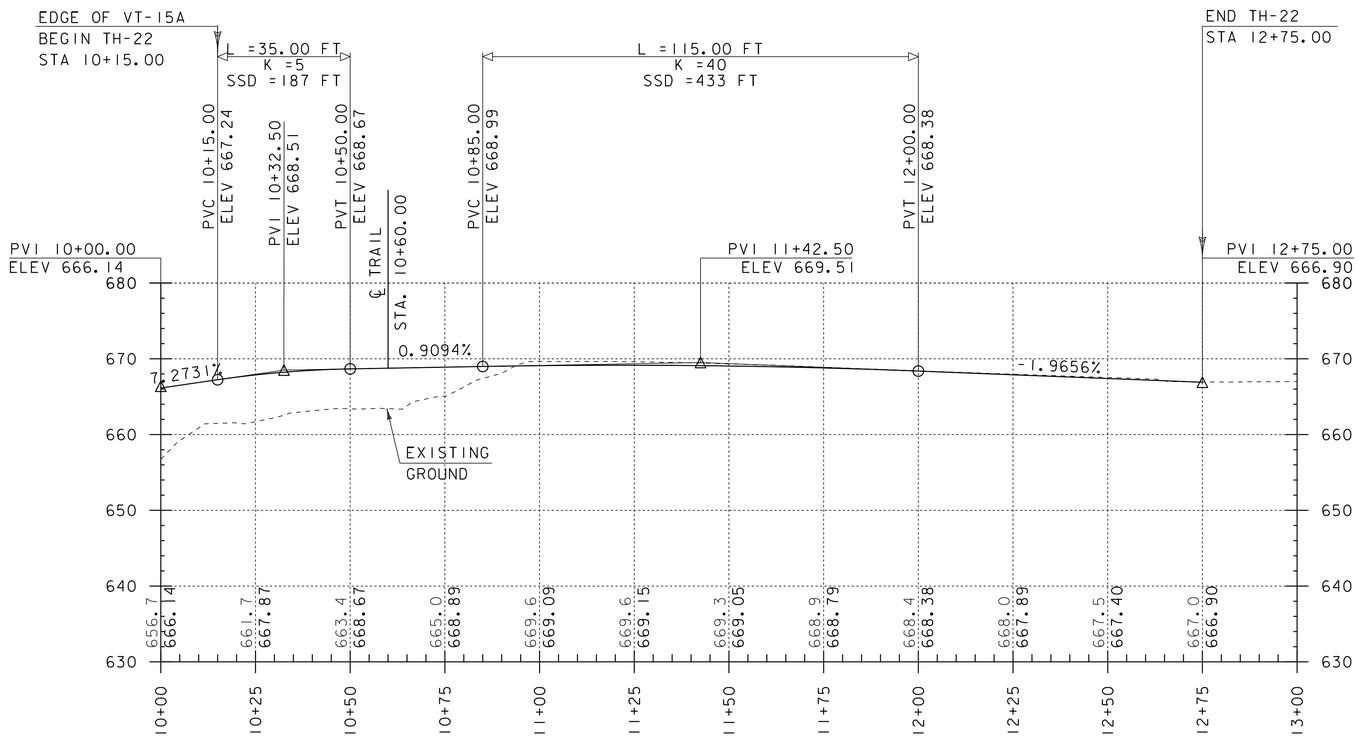

TH-22 PROFILE

HOR. SCALE 1" = 20'-0"
VER. SCALE 1" = 10'-0"

THE GRADES SHOWN TO THE NEAREST TENTH ARE THE ORIGINAL GROUND ELEVATIONS ALONG THE PROPOSED ALIGNMENT.

THE GRADES SHOWN TO THE NEAREST HUNDREDTH ARE THE FINISH GRADES ALONG THE PROPOSED ALIGNMENT.

PROJECT NAME: MORRISTOWN	
PROJECT NUMBER: BRS 0240(3)S	
FILE NAME: s78f329pro.dgn	PLOT DATE: 16-NOV-2015
PROJECT LEADER: C. CARLSON	DRAWN BY:
DESIGNED BY: J. GRIFFIN	CHECKED BY: J. LACROIX
TH-22 PROFILE	SHEET 28 OF 148

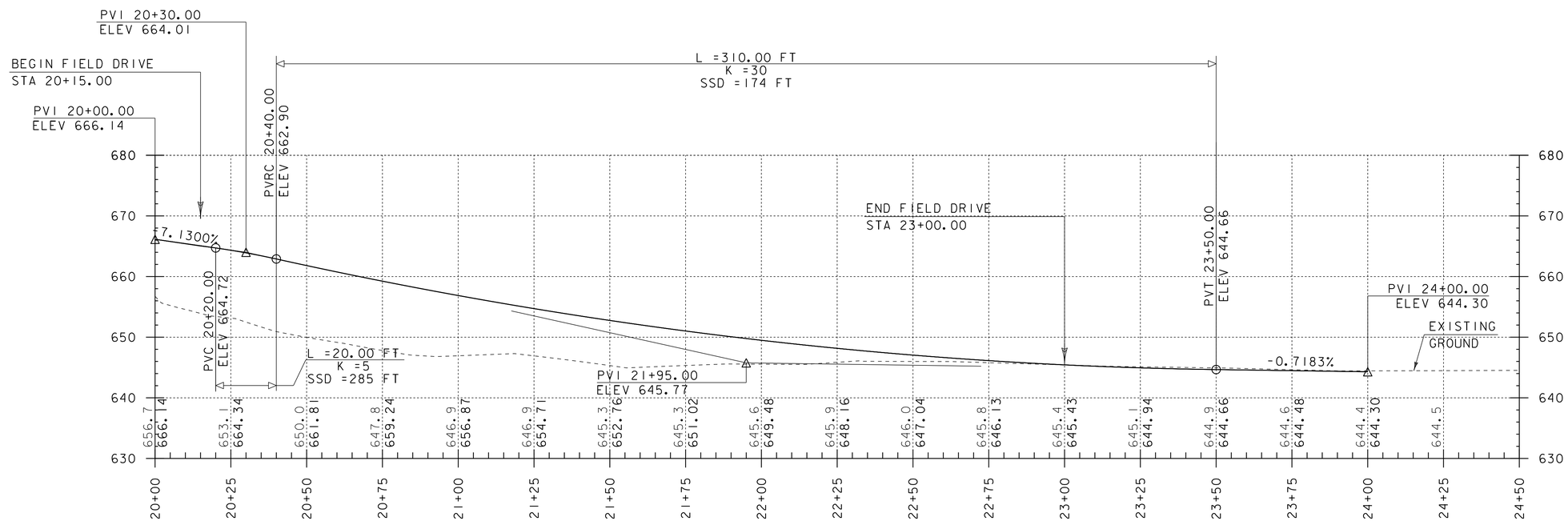

FIELD DRIVE PROFILE

HOR. SCALE 1" = 20'-0"
VER. SCALE 1" = 10'-0"

THE GRADES SHOWN TO THE NEAREST TENTH ARE THE ORIGINAL GROUND ELEVATIONS ALONG THE PROPOSED ALIGNMENT.

THE GRADES SHOWN TO THE NEAREST HUNDREDTH ARE THE FINISH GRADES ALONG THE PROPOSED ALIGNMENT.

PROJECT NAME: MORRISTOWN	
PROJECT NUMBER: BRS 0240(3)S	
FILE NAME: s78f329pro.dgn	PLOT DATE: 16-NOV-2015
PROJECT LEADER: C. CARLSON	DRAWN BY:
DESIGNED BY: J. GRIFFIN	CHECKED BY: J. LACROIX
FIELD 1 DRIVE PROFILE	SHEET 29 OF 148

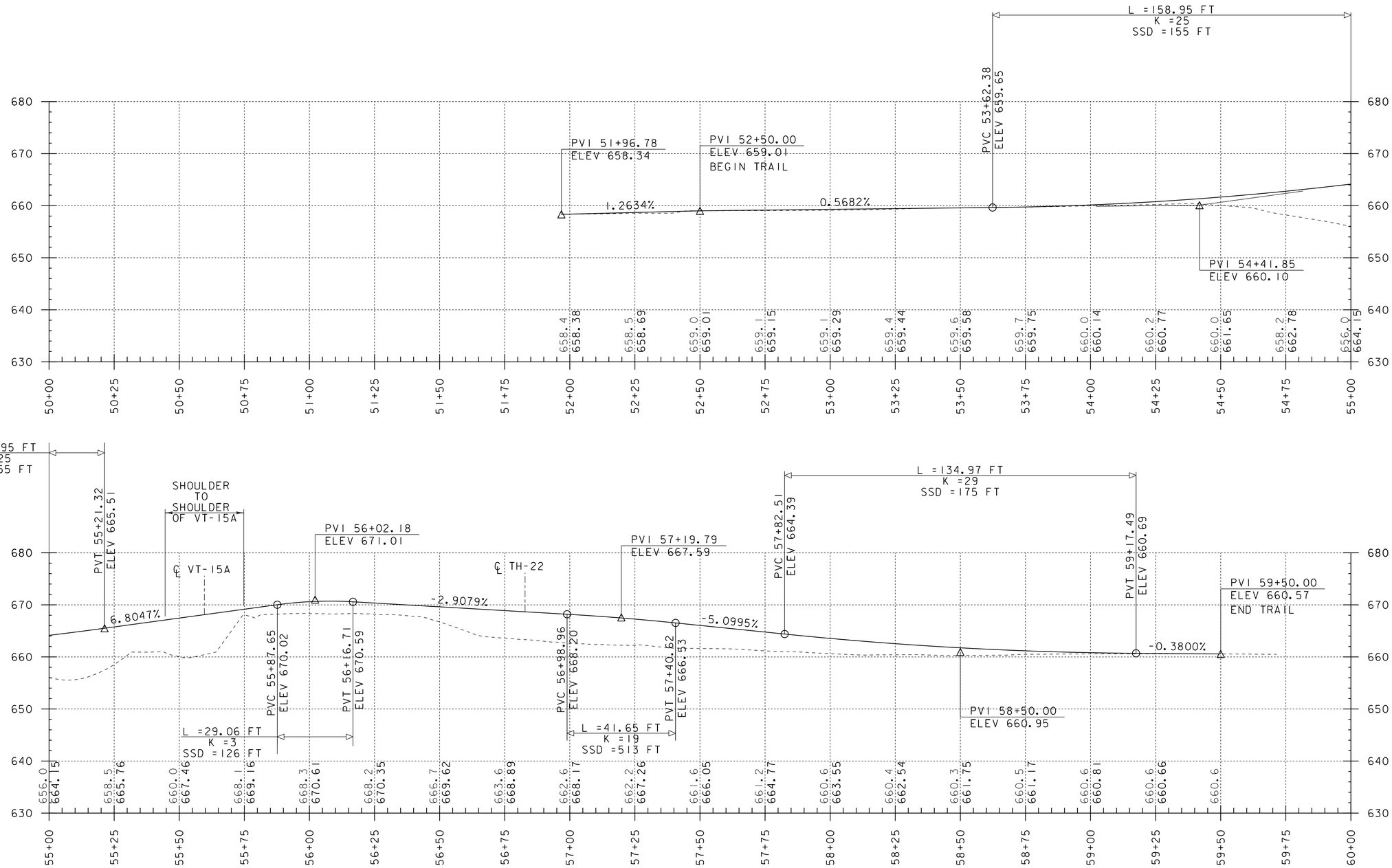

THE GRADES SHOWN TO THE NEAREST TENTH ARE THE ORIGINAL GROUND ELEVATIONS ALONG THE PROPOSED ALIGNMENT.

THE GRADES SHOWN TO THE NEAREST HUNDREDTH ARE THE FINISH GRADES ALONG THE PROPOSED ALIGNMENT.

TRAIL PROFILE

HOR. SCALE 1" = 20'-0"
VER. SCALE 1" = 10'-0"

PROJECT NAME: MORRISTOWN	
PROJECT NUMBER: BRS 0240(3)S	
FILE NAME: s78f329pro.dgn	PLOT DATE: 16-NOV-2015
PROJECT LEADER: C. CARLSON	DRAWN BY:
DESIGNED BY: J. GRIFFIN	CHECKED BY: J. LACROIX
TRAIL PROFILE	SHEET 30 OF 148

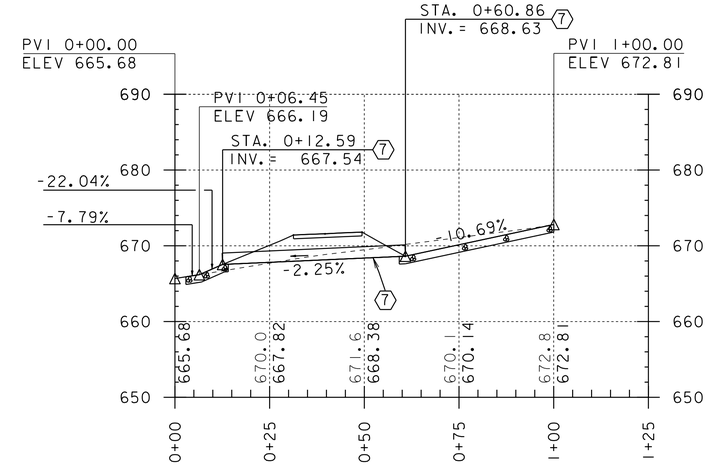

STA. 0+00.00 IS LOCATED AT
VT-15A STA. 115+00.00 OFFSET 30'-11" LT

STA. 0+60.86 IS LOCATED AT
VT-15A STA. 115+60.86 OFFSET 31'-7" LT

STA. 1+00.00 IS LOCATED AT
VT-15A STA. 116+00.00 OFFSET 30'-0" LT

7 NEW 18 INCH DIA. CPEP/CAAP/PCCSP PIPE
LENGTH 48'-4"

115+25.00 FIELD DRIVE DRAINAGE

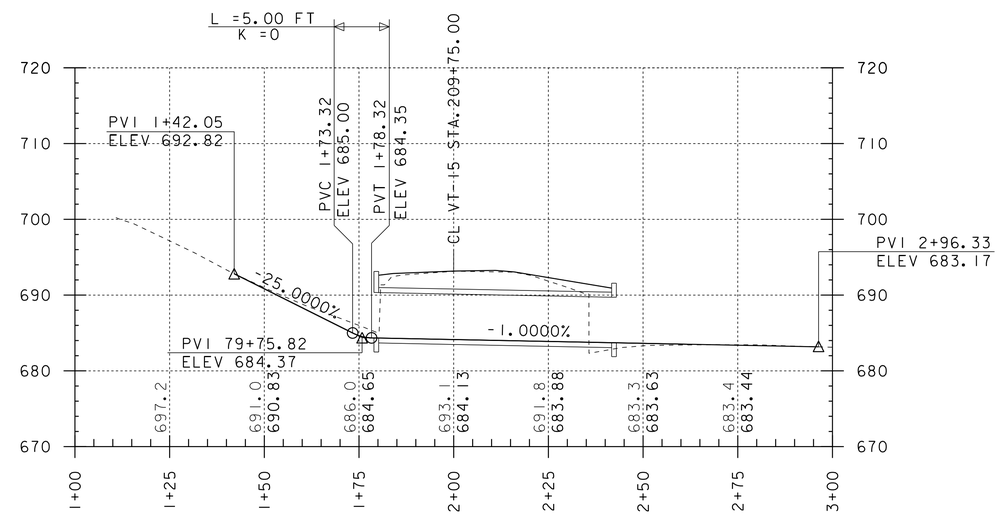

CATTLE PASS PROFILE

HORIZONTAL SCALE 1" = 20-0'
VERTICAL SCALE 1" = 10-0'

PROJECT NAME: MORRISTOWN	
PROJECT NUMBER: BRS 0240(3)S	
FILE NAME: 78f329\STRNf329pro.dgn	PLOT DATE: 16-NOV-2015
PROJECT LEADER: C. CARLSON	DRAWN BY: G. ROKES
DESIGNED BY: J. GRIFFIN	CHECKED BY: J. LACROIX
FIELD DRIVE 2 AND CATTLE PASS PROFILES	SHEET 31 OF 148

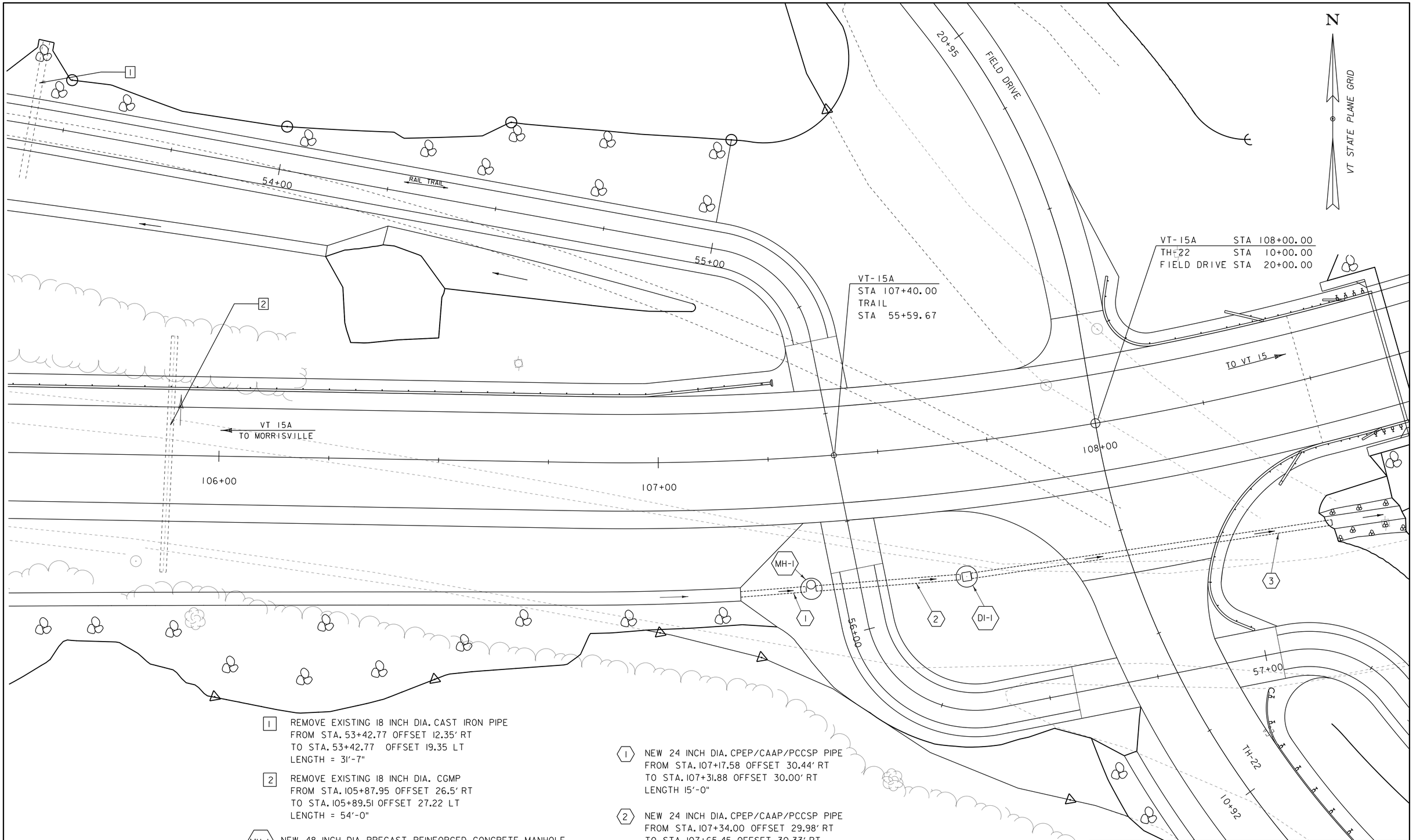

1 REMOVE EXISTING 18 INCH DIA. CAST IRON PIPE
FROM STA. 53+42.77 OFFSET 12.35' RT
TO STA. 53+42.77 OFFSET 19.35 LT
LENGTH = 31'-7"

2 REMOVE EXISTING 18 INCH DIA. CGMP
FROM STA. 105+87.95 OFFSET 26.5' RT
TO STA. 105+89.51 OFFSET 27.22 LT
LENGTH = 54'-0"

MH-1 NEW 48 INCH DIA PRECAST REINFORCED CONCRETE MANHOLE
WITH CAST IRON COVER
STA. 107+33.00 30.00' RT

DI-1 NEW 48 INCH DIA PRECAST REINFORCED CONCRETE DROP INLET
WITH CAST IRON GRATE, TYPE B
STA. 107+66.85 30.39' RT

1 NEW 24 INCH DIA. CPEP/CAAP/PCCSP PIPE
FROM STA. 107+17.58 OFFSET 30.44' RT
TO STA. 107+31.88 OFFSET 30.00' RT
LENGTH 15'-0"

2 NEW 24 INCH DIA. CPEP/CAAP/PCCSP PIPE
FROM STA. 107+34.00 OFFSET 29.98' RT
TO STA. 107+65.45 OFFSET 30.33' RT
LENGTH 33'-0"

3 NEW 24 INCH DIA. CPEP/CAAP/PCCSP PIPE
FROM STA. 107+67.88 OFFSET 30.35' RT
TO STA. 108+46.95 OFFSET 33.10' RT
LENGTH 83'-0"

SCALE 1" = 10'-0"
10 0 10

PROJECT NAME: MORRISTOWN
PROJECT NUMBER: BRS 0240(3)S

FILE NAME: s78f329drainbdr.dgn
PROJECT LEADER: C. CARLSON
DESIGNED BY: J. GRIFFIN
VT-15A DRAINAGE LAYOUT 1

PLOT DATE: 16-NOV-2015
DRAWN BY:
CHECKED BY: J. LACROIX
SHEET 32 OF 148

DI-2 NEW 48 INCH DIA PRECAST REINFORCED CONCRETE DROP INLET
WITH CAST IRON GRATE, TYPE B
STA. 12+39.28 OFFSET 18.56' RT

4 NEW 18 INCH DIA. CPEP/CAAP/PCCSP PIPE
FROM STA 12+39.73 OFFSET 17.79' RT
TO STA 12+63.32 OFFSET 23.06' LT
LEGNTH 47'-0"

5 NEW 30 INCH DIA. CPEP/CAAP/PCCSP PIPE
FROM STA 59+07.06 OFFSET 14.0' RT
TO STA 59+08.21 OFFSET 14.0' LT
LEGNTH 28'-0"

3 REMOVE EXISTING 18" RCP
FROM STA. 59+07.23 OFFSET 9.90' RT
TO STA. 59+08.18 OFFSET 14.43' LT
LENGTH 25'-0"

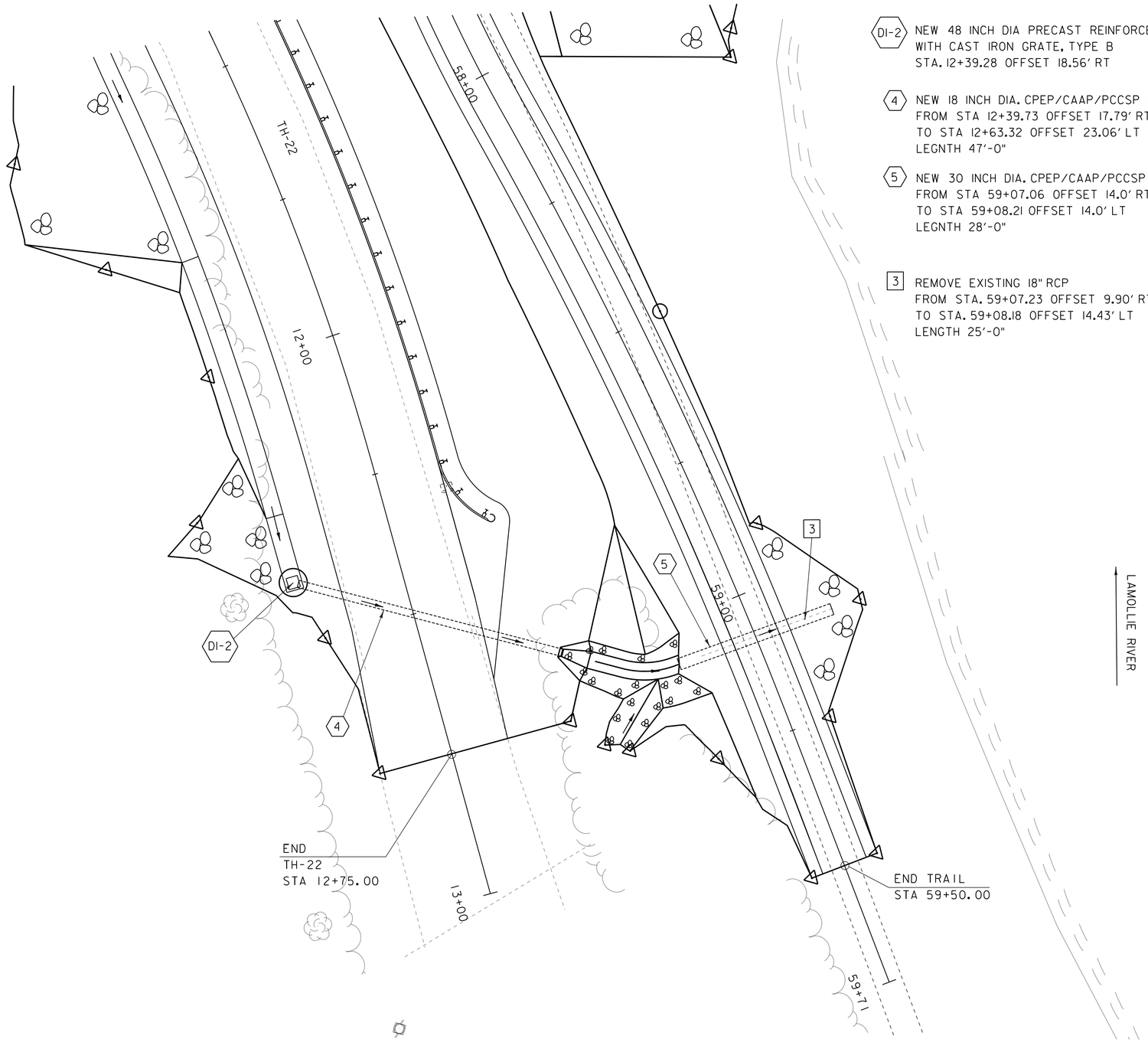

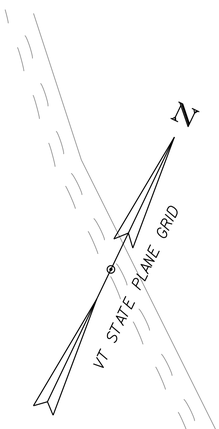

SCALE 1" = 10'-0"
10 0 10

PROJECT NAME: MORRISTOWN	
PROJECT NUMBER: BRS 0240(3)S	
FILE NAME: s78f329drainbdr.dgn	PLOT DATE: 16-NOV-2015
PROJECT LEADER: C. CARLSON	DRAWN BY:
DESIGNED BY: J. GRIFFIN	CHECKED BY: J. LACROIX
VT-15A DRAINAGE LAYOUT 2	SHEET 33 OF 148

6 NEW 18 INCH DIA. CPEP/CAAP/PCCSP PIPE
FROM STA. 113+83.05 OFFSET 32'-0" LT
TO STA. 114+29.88 OFFSET 35'-5" RT
LENGTH 78'-7"

7 NEW 18 INCH DIA. CPEP/CAAP/PCCSP PIPE
FROM STA. 115+12.59 OFFSET 31'-0" LT
TO STA. 115+60.86 OFFSET 31'-7" LT
LENGTH 48'-4"

4 REMOVE EXISTING 18" CGMP
FROM STA. 114+02.54 OFFSET 27'-3" LT
TO STA. 114+25.12 OFFSET 23'-0" RT
LENGTH 55'-0"

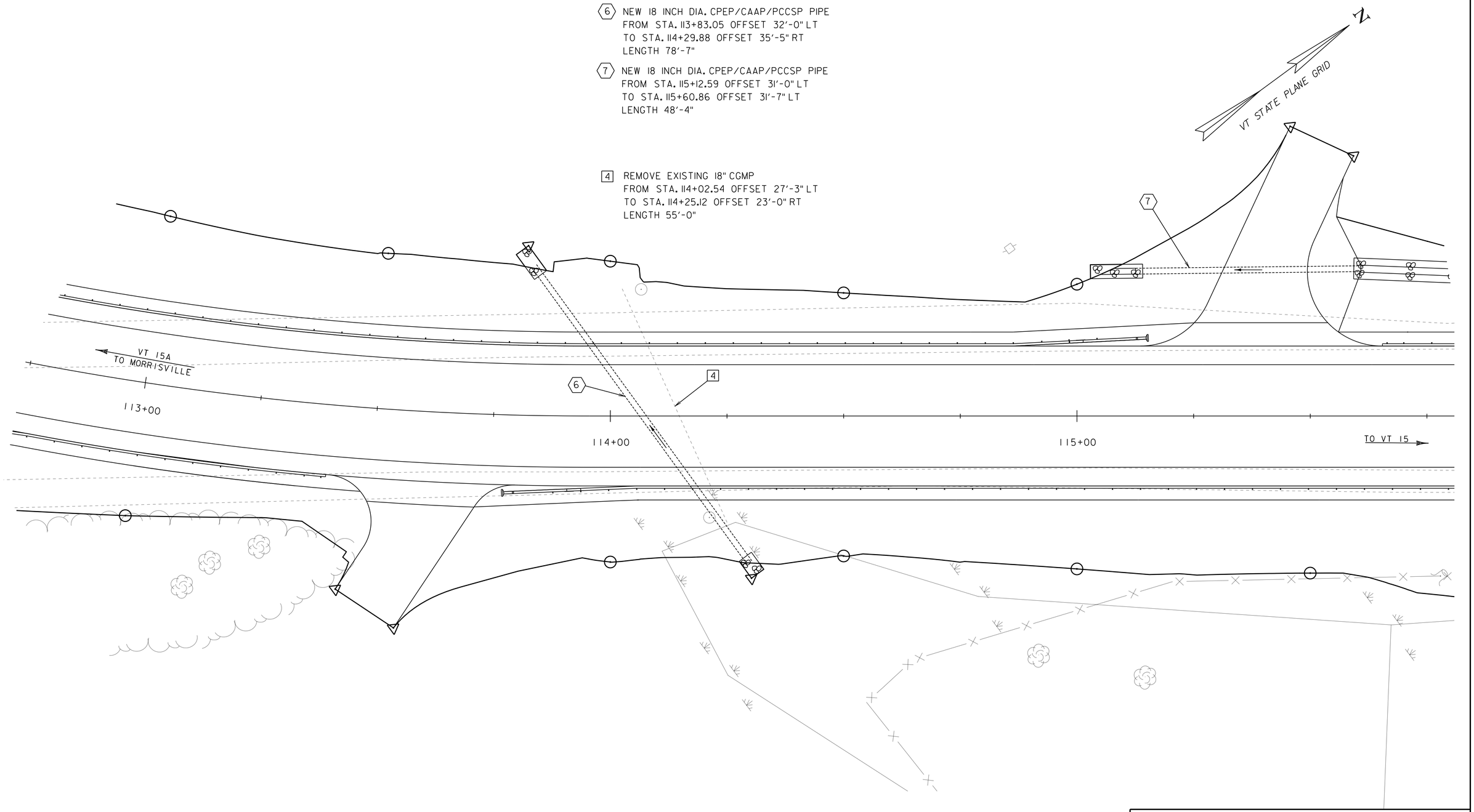

SCALE 1" = 10'-0"
10 0 10

PROJECT NAME: MORRISTOWN	
PROJECT NUMBER: BRS 0240(3)S	
FILE NAME: s78f329drainbdr.dgn	PLOT DATE: 16-NOV-2015
PROJECT LEADER: C. CARLSON	DRAWN BY:
DESIGNED BY: J. GRIFFIN	CHECKED BY: J. LACROIX
VT-15A DRAINAGE LAYOUT 3	SHEET 34 OF 148

5 RETAIN EXISTING 30" RCP REINFORCED CONCRETE PIPE
FROM STA. 206+68.46 53.58' RT
TO STA. 207+13.36 29.66' LT

6 REMOVE EXISTING 4' X 6' CAST INPLACE CONCRETE BOX
VT-15 ALIGNMENT STA. 207+13.37 31.27' LT

7 REMOVE EXISTING 30" CSP
FROM STA. 207+13.48 32.90 LT
TO STA. 207+41.96 76.84' LT
LENGTH 51'-4"

8 REMOVE EXISTING LAID-UP GRANITE BLOCK HEADWALL
FROM STA. 207+37.04 76.86' LT
TO STA. 207+46.89 76.79' LT

MH-2 NEW 48 INCH DIA. PRECAST REINFORCED CONCRETE MANHOLE
WITH CAST IRON COVER
STA. 207+12.30 OFFSET 39'-5" LT
SEE "VT-15 PRECAST CONCRETE MANHOLE DETAIL"
ON THE "PRECAST CONCRETE DRAINAGE STRUCTURES" SHEET

HW-1 NEW REINFORCED CONCRETE STRAIT HEADWALL
FROM STA. 207+34.41 OFFSET 73'-8" FT LT
TO STA. 207+45.41 OFFSET 72'-9" FT LT

SEE "VT-15 DRAINAGE CONVEYANCE GRADING" SHEET

8 NEW 30 INCH DIA. CPEP/CAAP/PCCSP PIPE
FROM STA. 207+13.34 29'-9' LT
TO 207+18.48 44'-2" LT
EXTENSION PIPE COUPLED TO PIPE 5
LENGTH 9'-8"

9 NEW 30 INCH DIA. CPEP/CAAP/PCCSP PIPE
FROM STA. 207+19.98 OFFSET 40'-6" FT LT
TO STA. 207+40.16 OFFSET 74'-1" FT LT
LENGTH 38'-4"

10 UNDERDRAIN FLUSHING BASIN
STA. 206+25.00 OFFSET 36'-6" FT LT

11 6" UNDERDRAIN CARRIER PIPE
FROM STA. 206+25.00 OFFSET 20'-6" LT
TO STA. 206+25.00 OFFSET 36'-6" LT
LENGTH 16'-0"

12 6" UNDERDRAIN PIPE
FROM STA. 206+25.00 OFFSET 20'-6" LT
TO STA. 209+00.00 OFFSET 20'-6" LT
LENGTH 275'-0"

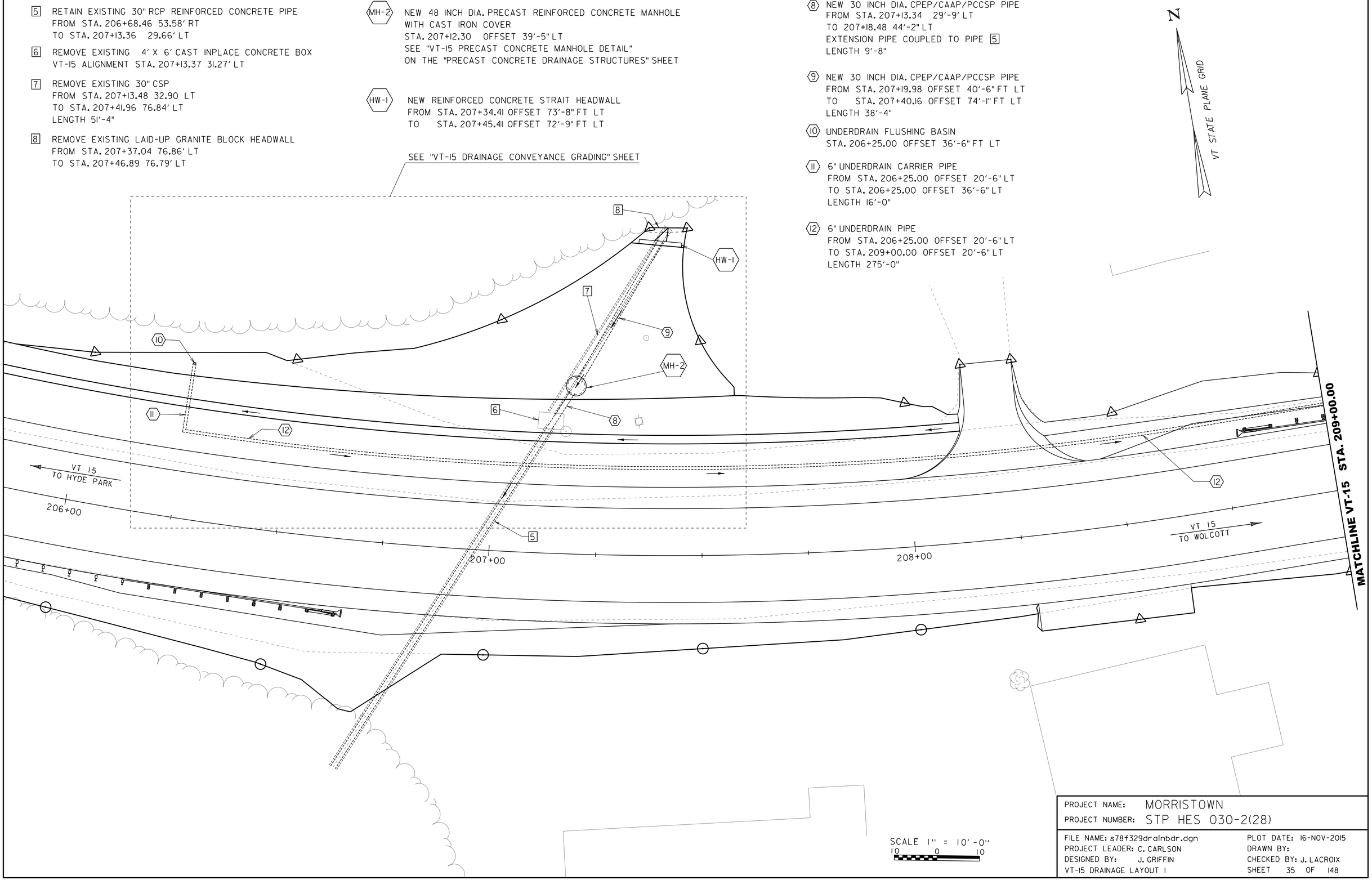

PROJECT NAME: MORRISTOWN
PROJECT NUMBER: STP HES 030-2(28)

FILE NAME: s78f329drainbdr.dgn
PROJECT LEADER: C. CARLSON
DESIGNED BY: J. GRIFFIN
VT-15 DRAINAGE LAYOUT 1

PLOT DATE: 16-NOV-2015
DRAWN BY:
CHECKED BY: J. LACROIX
SHEET 35 OF 148

(12) 6" UNDERDRAIN PIPE
FROM STA. 209+00.00 OFFSET 20'-6" LT
TO STA. 209+67.68 OFFSET 20'-6" LT
LENGTH 67'-8"

(13) UNDERDRAIN FLUSHING BASIN
STA. 209+67.68 OFFSET 21'-8" FT LT

(14) 6" UNDERDRAIN PIPE
FROM STA. 209+67.68 OFFSET 21'-8" LT
TO STA. 209+67.72 OFFSET 54'-9 RT
LENGTH 75'-3"

(15) 6" UNDERDRAIN CARRIER PIPE
FROM STA. 209+67.72 OFFSET 54'-9 RT
TO STA. 209+70.87 OFFSET 62'-4" RT
LENGTH 8'-3"

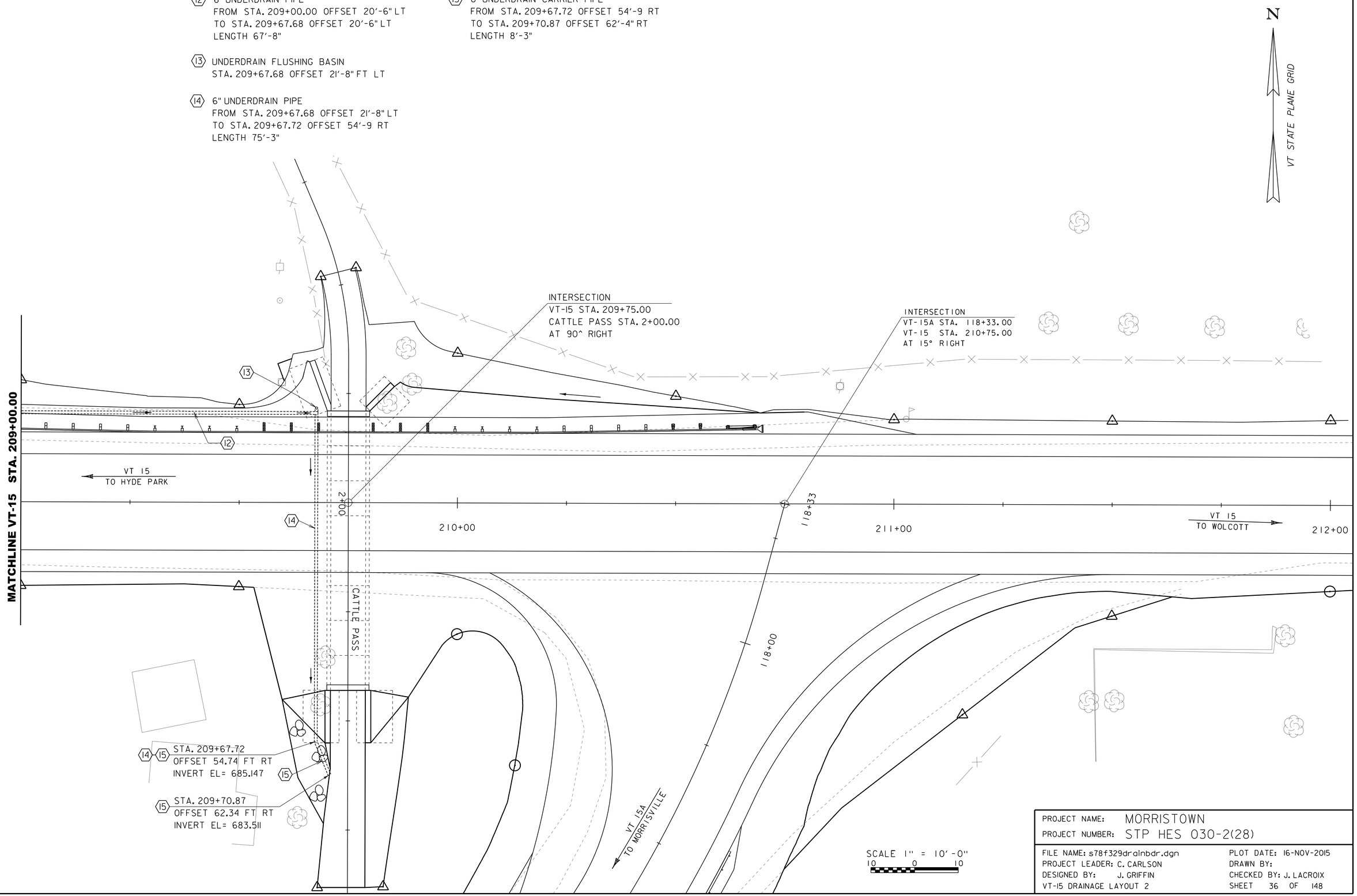

PROJECT NAME: MORRISTOWN	
PROJECT NUMBER: STP HES 030-2(28)	
FILE NAME: s78f329drainbdr.dgn	PLOT DATE: 16-NOV-2015
PROJECT LEADER: C. CARLSON	DRAWN BY:
DESIGNED BY: J. GRIFFIN	CHECKED BY: J. LACROIX
VT-15 DRAINAGE LAYOUT 2	SHEET 36 OF 148

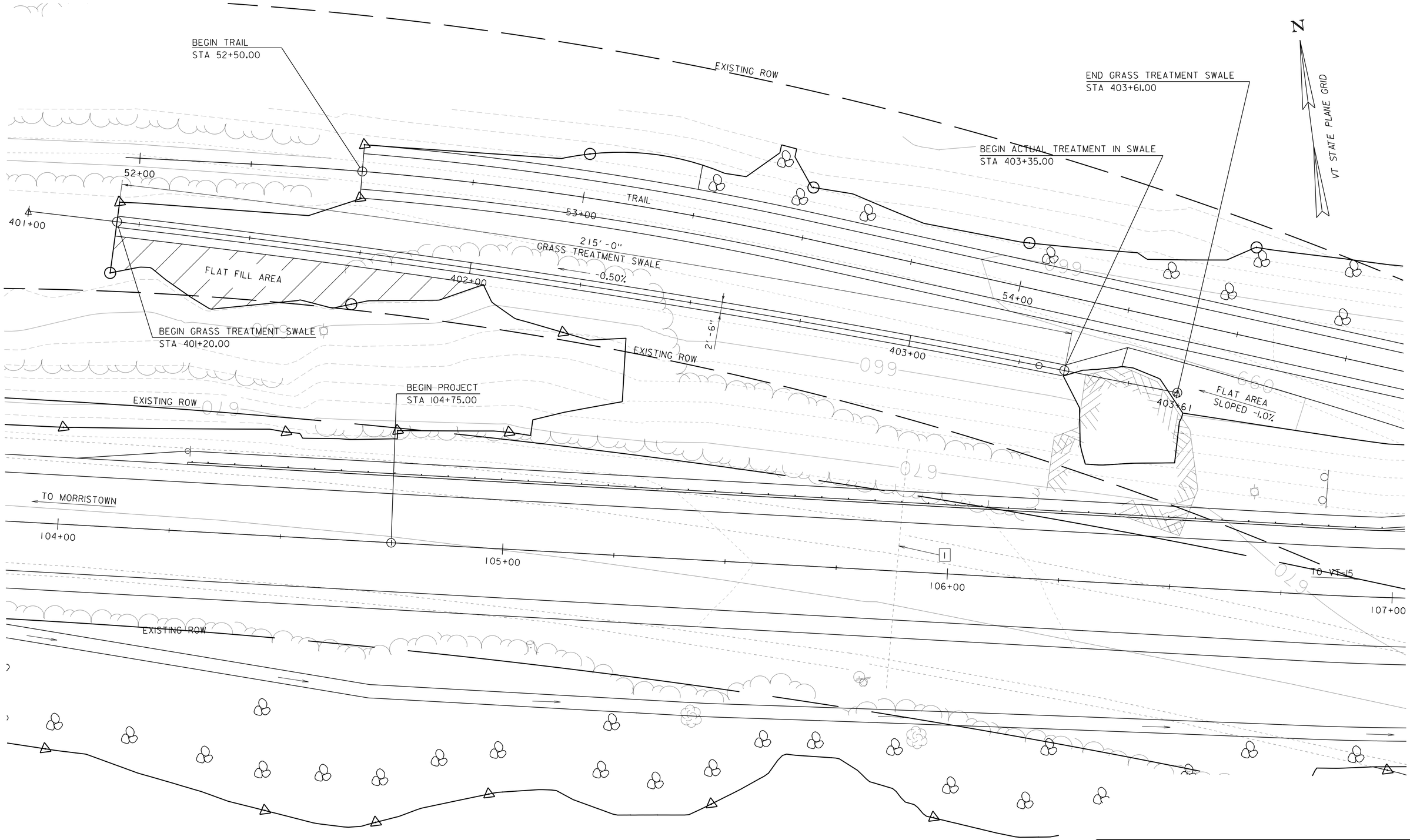

NOTE: SEE "GRASS TREATMENT SWALE SECTIONS" SHEETS ,"TRAIL SECTIONS" SHEETS, AND "VT-15A SECTIONS" SHEETS FOR ADDITIONAL INFORMATION.

1 REMOVE EXISTING 15 INCH DIA. PIPE (FOR ADDITIONAL INFORMATION SEE "VT-15A SECTIONS SHEET 3")

CONTOUR LINE DISPLAYED ON THIS SHEET ARE PROPOSED

SCALE 1" = 10'-0"
10 0 10

PROJECT NAME: MORRISTOWN	
PROJECT NUMBER: BRS 0240 (3)S	
FILE NAME: 78f329\STR\s78f329swdtls.dgn	PLOT DATE: 16-NOV-2015
PROJECT LEADER: C. CARLSON	DRAWN BY: G. ROKES
DESIGNED BY: G. ROKES	CHECKED BY: J. GRIFFIN
GRASS TREATMENT SWALE PLAN	SHEET 37 OF 148

PROPOSED CONTOURS

TH-22

TH-22 STA. 12+50.00 TO
PIPE STA. 502+10.78
@ 60°

STA. 502+40.45
OFFSET 23.68 FT LT
EL. = 658.05

STA. 502+59.83
OFFSET 5.07 FT LT
EL. = 657.37

STA. 502+52.06
OFFSET 2.92 FT LT
EL. = 657.30

PC
STA. 502+48.02

STA 502+41.19
OFFSET 3.15 FT LT
EL. = 658.39

DI-2

502+00

N 88°33'34.90" E

4

PI
STA 501+89.35

9.76%

1.50%

1:3.0

1:3.0

3'-0"

1:2.0

1:3.0

1:2.0

1:2.0

PT
STA 502+57.05

STA 502+41.44
OFFSET 3.90 FT RT
EL. = 658.94

STA 502+49.15
OFFSET 5.10 FT RT
EL. = 658.86

PROJECT LIMITS

STA 502+49.15
OFFSET 5.10 FT RT
EL. = 658.86

END TH-22
STA. 12+75.00

EXISTING FLOW

13+00

STA 502+61.70
OFFSET 6.57 FT RT
EL. = 657.82

STA 502+54.11
OFFSET 6.56 FT RT
EL. = 658.33

PI
STA 502+52.68

SIDE CHANNEL BOTTOM
CHANNEL IS V SHAPED TO
MATCH ORIGINAL GROUND

STA 502+50.55
OFFSET 13.85 FT RT
EL. = 659.67

STA 502+49.61
OFFSET 12.92 FT RT
EL. = 657.69

EXISTING 15 INCH CMP OUTLET

PROJECT LIMITS

59+00

3

5

TRAIL STA. 59+07.65 TO
PIPE STA. 502+72.00 PIPE
@ 90°

N 54°04'52.29" E

503+00

503+06

VT STATE PLANE GRID

N

PROJECT LIMITS

END TRAIL
STA. 59+50.00

DI-2 NEW 48 INCH DIA. PRECAST REINFORCED CONCRETE CATCH BASIN

4 NEW 18 INCH DIA. CPEP/CAAP/PCCSP PIPE

5 NEW 30 INCH DIA. CPEP/CAAP/PCCSP PIPE

3 REMOVE EXISTING 18" CSP

SEE "TH-22 AND TRAIL DRAINAGE PROFILE" ON THE "DRAINAGE SYSTEMS PROFILE SHEET FOR STATIONS AND ELEVATIONS REGARDING ADDITIONAL PIPE AND OR CATCH BASIN INFORMATION.

SCALE 1" = 4'-0"
4 0 4

PROJECT NAME: MORRISTOWN	
PROJECT NUMBER: BRS 0240(3)S	
FILE NAME: s78f329drainsys.dgn	PLOT DATE: 16-NOV-2015
PROJECT LEADER: C. CARLSON	DRAWN BY: G. ROKES
DESIGNED BY: N. VANDENBERG	CHECKED BY: N. VANDENBERG
TH-22 DITCH CONVERGENCE LAYOUT	SHEET 38 OF 148

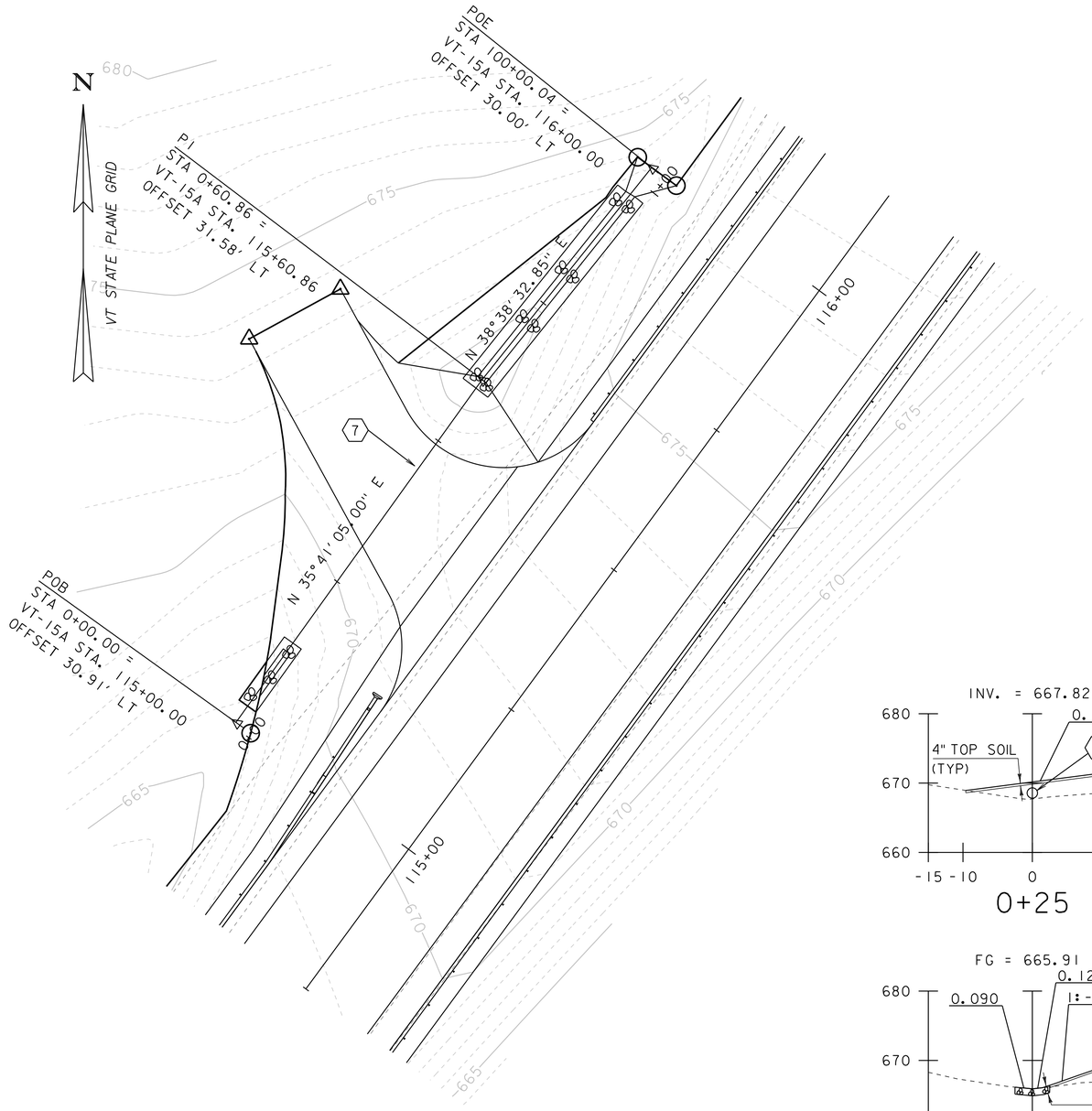

FIELD DRIVE DRAINAGE PLAN

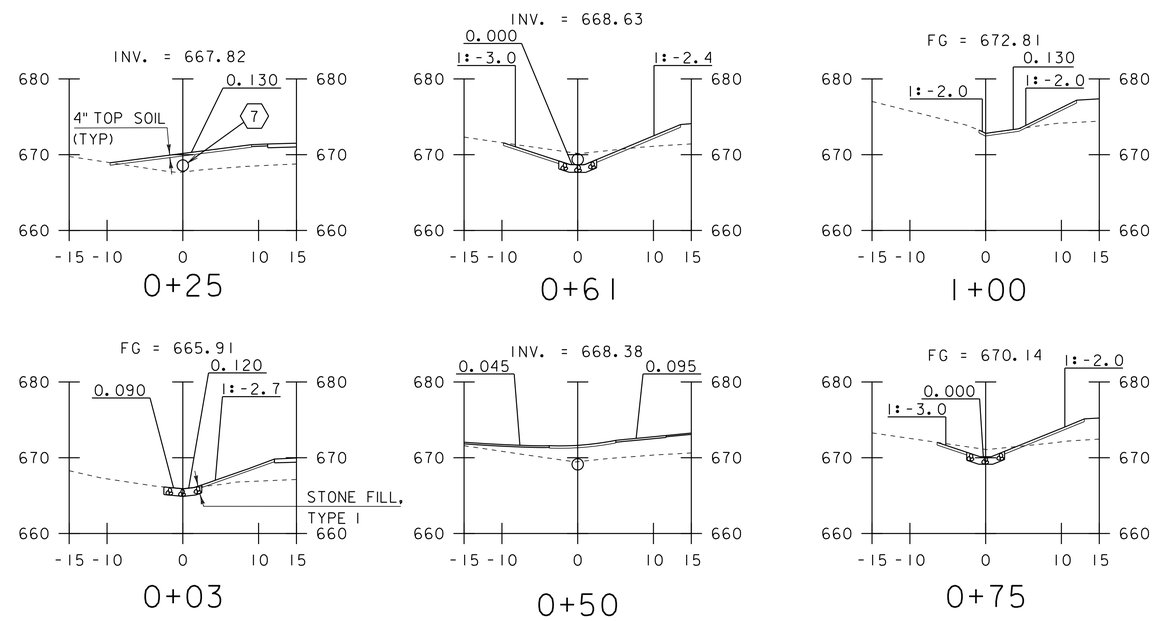

FOR INFORMATION ON PIPE INVERTS, PIPE SLOPES SEE "115+25.00 FIELD DRIVE DRAINAGE " ON "FIELD DRIVE 2 AND CATTLE PASS PROFILES" SHEET

7 NEW 18 INCH DIA. CPEP/CAAP/PCCSP PIPE
FROM STA. 115+12.58 OFFSET 31'-0" LT
TO STA. 115+60.86 OFFSET 31'-7" LT
LENGTH 48'-4"

SCALE 1" = 10'-0"
10 0 10

PROJECT NAME: MORRISTOWN	
PROJECT NUMBER: STP HES 030-2(28)	
FILE NAME: s78f329drainsys.dgn	PLOT DATE: 16-NOV-2015
PROJECT LEADER: C. CARLSON	DRAWN BY:
DESIGNED BY: J. GRIFFIN	CHECKED BY: L. LACROIX
VT-15 FIELD DRIVE DRAINAGE	SHEET 39 OF 148

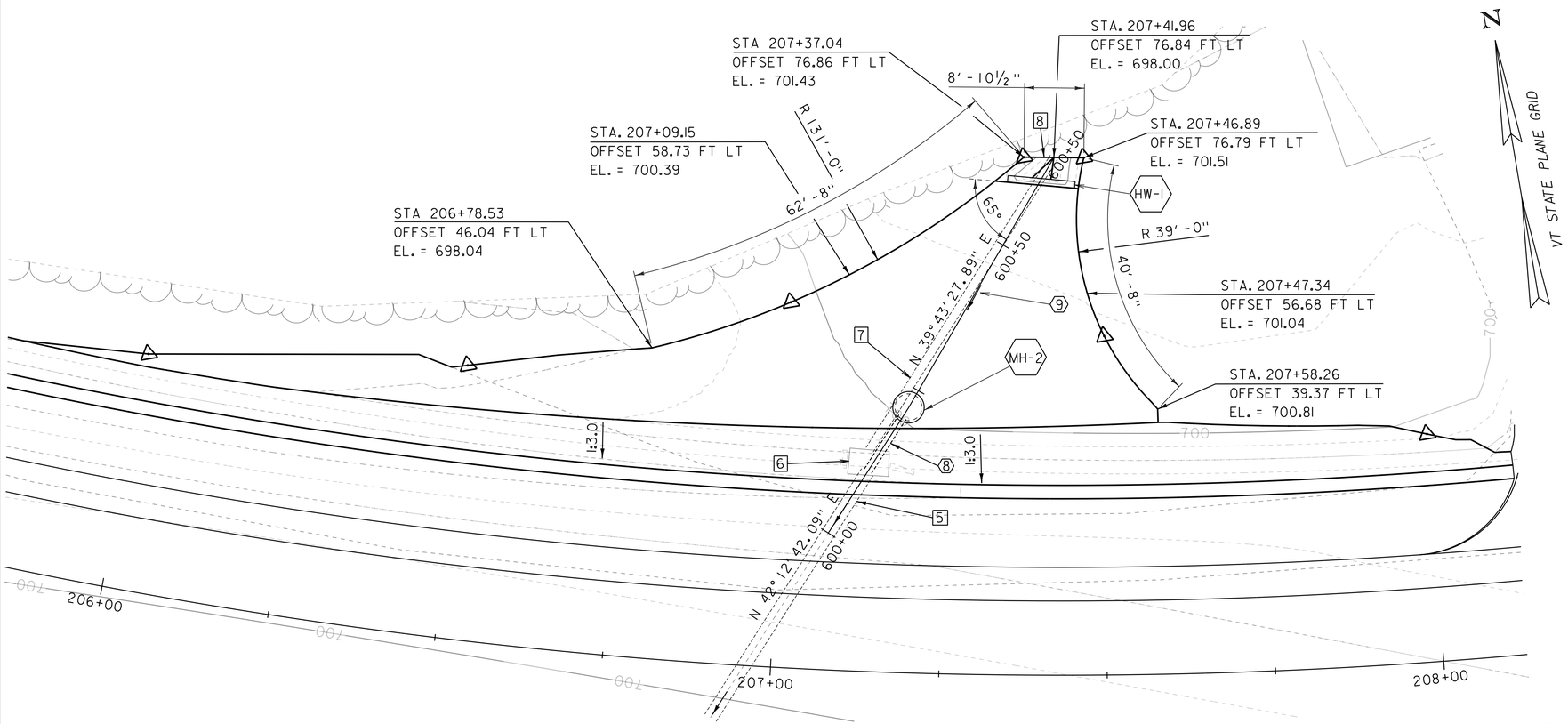

8 NEW 30 INCH DIA. CPEP/CAAP/PCCSP PIPE
FROM STA. 207+13.34 29'-9' LT
TO 207+18.48 44'-2" LT
EXTENSION PIPE COUPLED TO PIPE 5
LENGTH 9'-8"

MH-2 NEW 48 INCH DIA. PRECAST REINFORCED CONCRETE MANHOLE
WITH CAST IRON COVER
STA. 600+22.00 =
VT-15 STA. 207+12.30 OFFSET 39'-5" LT

HW-1 NEW REINFORCED CONCRETE STRAIT HEADWALL
STA. 600+61.41 =
VT-15 STA. 201+39.96 OFFSET 73'-9" FT LT

9 NEW 30 INCH DIA. CPEP/CAAP/PCCSP PIPE
FROM STA. 207+19.98 OFFSET 40'-6" FT LT
TO STA. 207+40.16 OFFSET 74'-1" FT LT
LENGTH 38'-4"

5 RETAIN EXISTING 30" RCP REINFORCED CONCRETE PIPE
FROM STA. 206+68.46 53.58' RT
TO STA. 207+13.36 29.66' LT

6 REMOVE EXISTING 4' X 6' CAST INPLACE CONCRETE BOX
VT-15 ALIGNMENT STA. 207+13.37 31.27' LT

7 REMOVE EXISTING 30" CSP
FROM STA. 207+13.48 32.90 LT
TO STA. 207+41.96 76.84' LT
LENGTH 51'-4"

8 REMOVE EXISTING LAID-UP GRANITE BLOCK HEADWALL
FROM STA. 207+37.04 76.86' LT
TO STA. 207+46.89 76.79' LT

FOR PIPE 9 PROFILE SEE "VT-15 DRAINAGE PROFILE" ON "DRAINAGE SYSTEMS PROFILES" SHEET

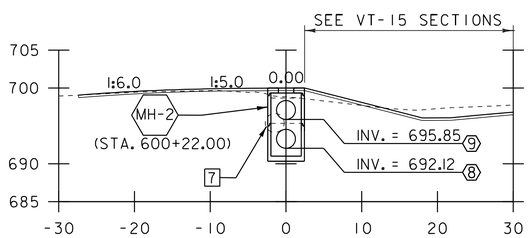

600+20

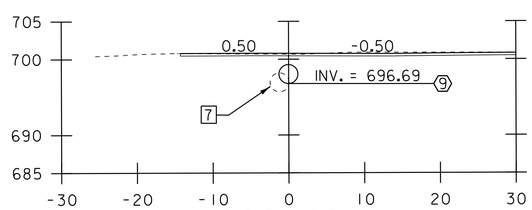

600+40

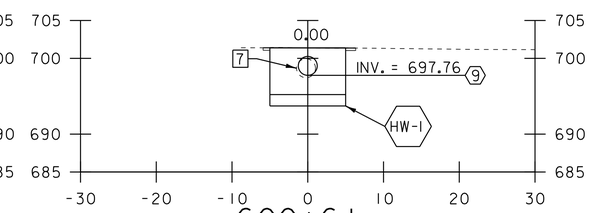

600+61

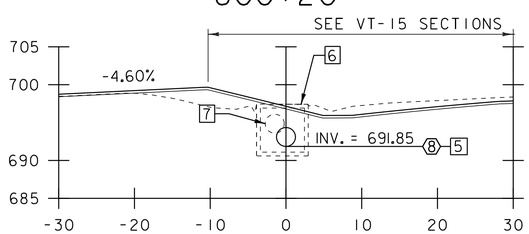

600+11

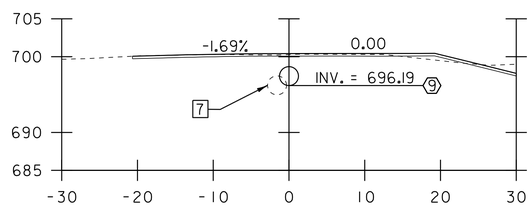

600+30

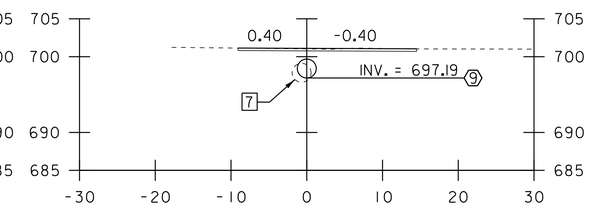

600+50

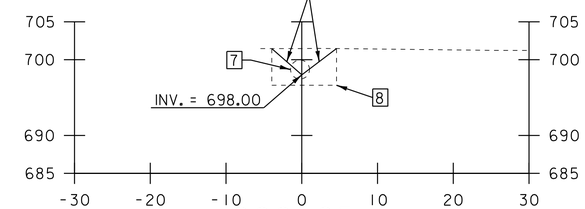

600+65

SCALE 1" = 10'-0"
10 0 10

PROJECT NAME: MORRISTOWN	
PROJECT NUMBER: STP HES 030-2(28)	
FILE NAME: s78f329drainsys.dgn	PLOT DATE: 16-NOV-2015
PROJECT LEADER: C. CARLSON	DRAWN BY:
DESIGNED BY: J. GRIFFIN	CHECKED BY: L. LACROIX
VT-15 DRAINAGE CONVEYANCE GRADING	SHEET 40 OF 148

MH-1 NEW 48 INCH DIA PRECAST REINFORCED CONCRETE MAN HOLE
TO INCLUDE CAST IRON COVER WITH FRAME
STA. 604+22.60

MH-2 NEW 48 INCH DIA. PRECAST REINFORCED CONCRETE MAN HOLE
STA. 600+22.00

HW-1 NEW REINFORCED CONCRETE STRAIT HEADWALL
STA. 600+61.44

DI-1 NEW 48 INCH DIA PRECAST REINFORCED CONCRETE DROP INLET
TO INCLUDE CAST IRON GRATE WITH FRAME, TYPE B
STA. 604+58.09

DI-2 NEW 48 INCH DIA. PRECAST REINFORCED CONCRETE DROP INLET
WITH CAST IRON GRATE WITH FRAME, TYPE B
STA. 501+89.35

PROPOSED PIPES

1. NEW 24 INCH DIA. CPEP/CAAP/PCCSP PIPE
LENGTH 15'-0"

2. NEW 24 INCH DIA. CPEP/CAAP/PCCSP PIPE
LENGTH 33'-0"

3. NEW 24 INCH DIA. CPEP/CAAP/PCCSP PIPE
LENGTH 83'-0"

4. NEW 18 INCH DIA. CPEP/CAAP/PCCSP PIPE
LENGTH 47'-0"

5. NEW 30 INCH DIA. CPEP/CAAP/PCCSP PIPE
LENGTH 28'-0"

8. NEW 30 INCH DIA. CPEP/CAAP/PCCSP PIPE
COUPLED PIPE EXTENSION FROM PIPE 5
LENGTH 9'-8"

9. NEW 30 INCH DIA. CPEP/CAAP/PCCSP PIPE
LENGTH 33'-4"

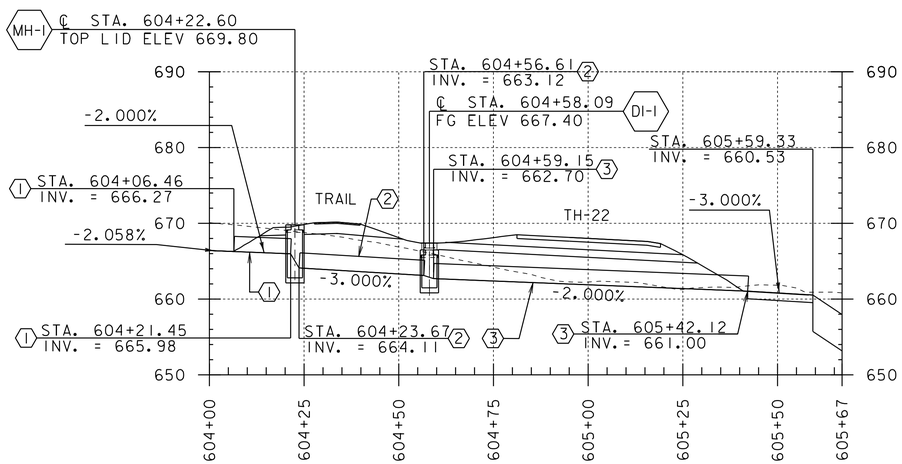

VT-15A DRAINAGE PROFILE

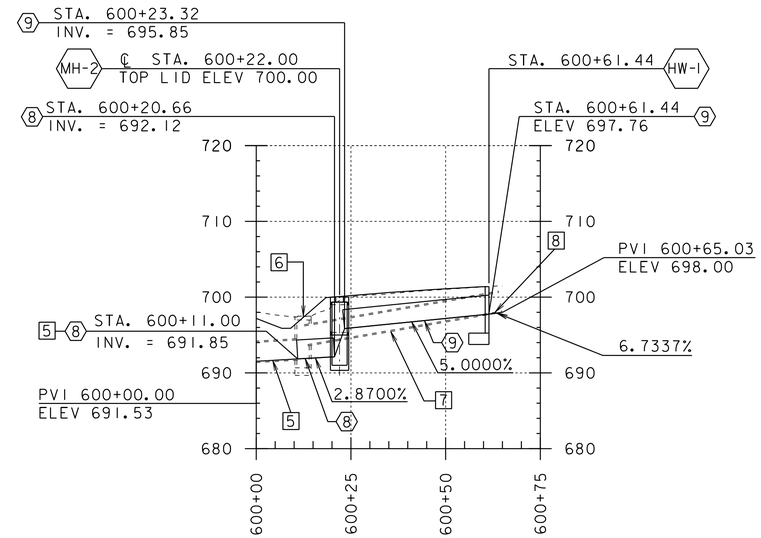

VT-15 DRAINAGE PROFILE

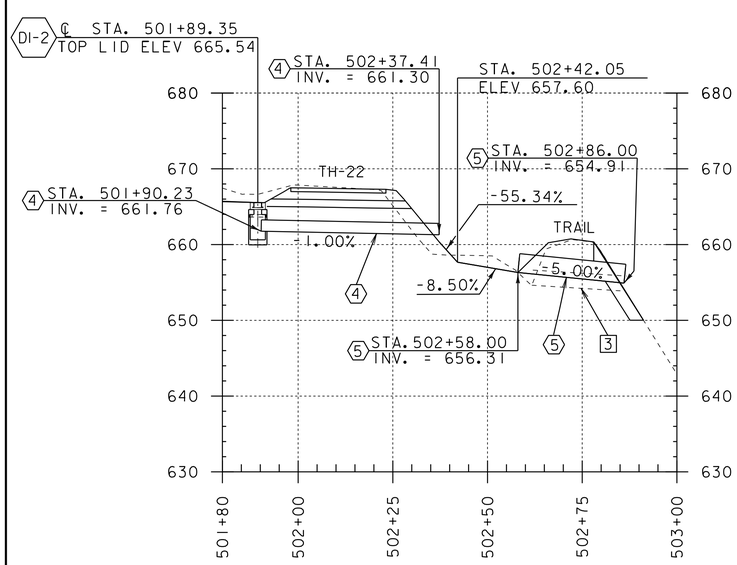

TH-22 AND TRAIL DRAINAGE PROFILE

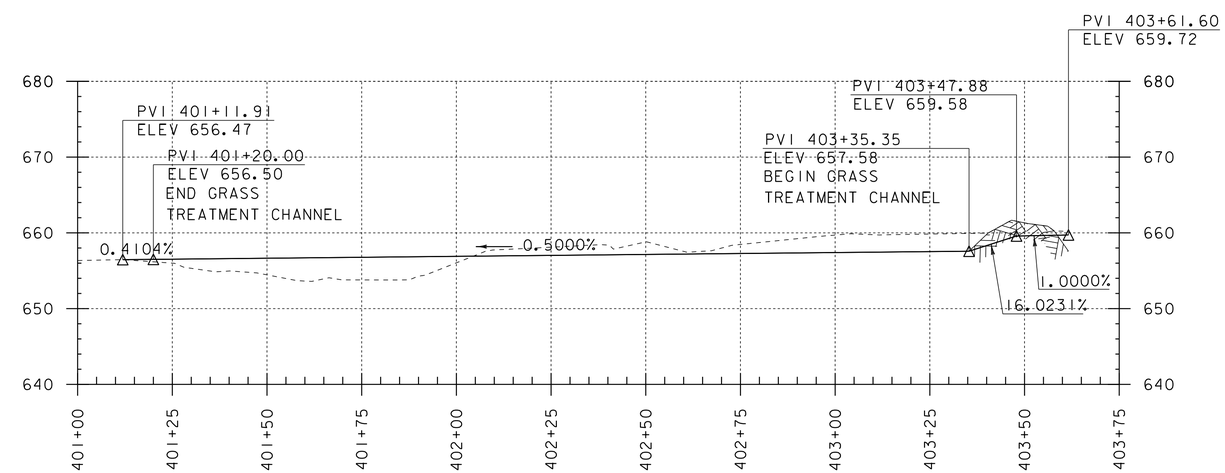

GRASS TREATMENT SWALE PROFILE

EXISTING PIPES

3. REMOVE EXISTING 18 INCH DIA. RCP REINFORCED CONCRETE PIPE
STA. 59+07.23 9.90' RT TO STA. 59+08.18 14.43' LT
LENGTH = 25'-0"

5. RETAIN EXISTING 30" RCP REINFORCED CONCRETE PIPE

6. REMOVE EXISTING 6' X 4' CAST INPLACE CONCRETE BOX

7. REMOVE EXISTING 30" CSP
LENGTH 51'-4"

8. REMOVE EXISTING LAID-UP GRANITE BLOCK HEADWALL

HORIZONTAL SCALE 1" = 10-0'
VERTICAL SCALE 1" = 20-0'

PROJECT NAME: MORRISTOWN	
PROJECT NUMBER: BRS 0240(3)S	
FILE NAME: 78f329\STR\ 78f329pro.dgn	PLOT DATE: 16-NOV-2015
PROJECT LEADER: C. CARLSON	DRAWN BY: G. ROKES
DESIGNED BY: J. GRIFFIN	CHECKED BY: J. LACROIX
DRAINAGE SYSTEMS PROFILES	SHEET 41 OF 148

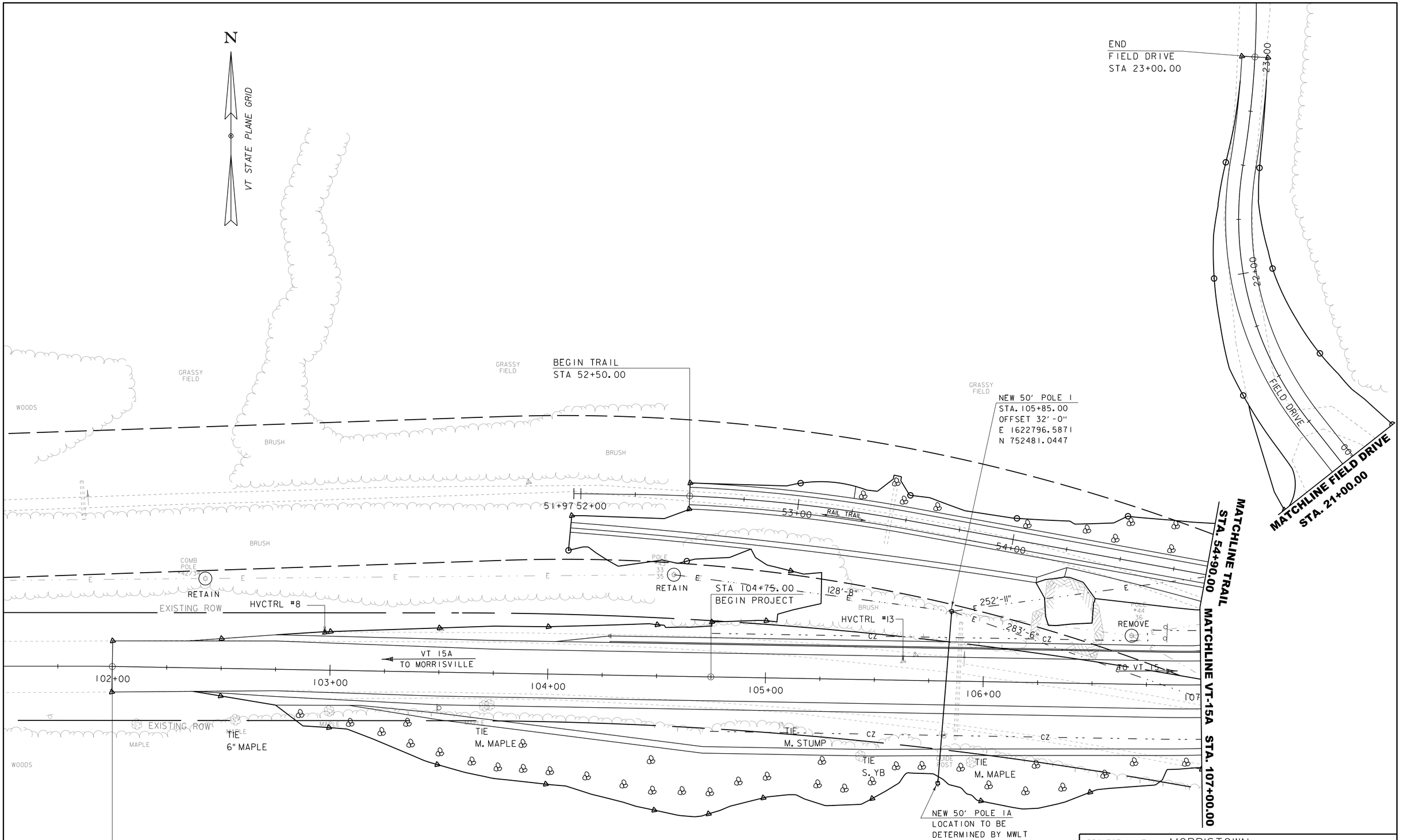

PROJECT NAME: MORRISTOWN	
PROJECT NUMBER: BRS 0240(3)S	
FILE NAME: s78f329utilbdr.dgn	PLOT DATE: 16-NOV-2015
PROJECT LEADER: C. CARLSON	DRAWN BY:
DESIGNED BY: J. GRIFFIN	CHECKED BY: L. LACROIX
VT-15A UTILITIES LAYOUT #1	SHEET 42 OF 148

MATCHLINE TRAIL
STA. 54+90.00

MATCHLINE FIELD DRIVE
STA. 21+00.00

MATCHLINE VT-15A STA. 107+00.00

MATCHLINE VT-15A STA 112+50.00

NEW 65' POLE 2
STA. 108+50.00
OFFSET 50'-0"
E 1623049.3630
N 752472.9511

NEW 45' POLE 3
STA. 111+35.0
OFFSET 40'-0"
E 1623303.9012
N 752540.5142

NEW GUY POLE
LOCATION TO BE
DETERMINED BY MWLT

NEW 45' POLE 4 WITH
TEMPORARY PUSH BRACE & GUY
STA. 110+90.00
OFFSET 24'-0"
E 1623045.0535
N 752344.5812

NEW POLE
LOCATION TO BE
DETERMINED BY MWLT

POLES NO LONGER
EXISTING (REMOVED)

STONE FILL, TYPE I

TEMPORARY GUY

VT 15A
TO MORRISVILLE

TO VT 15

LAMOLLIE RIVER

VT STATE PLANE GRID

N

SCALE 1" = 20'-0"
20 0 20

PROJECT NAME: MORRISTOWN	
PROJECT NUMBER: BRS 0240(3)S	
FILE NAME: s78f329utilbdr.dgn	PLOT DATE: 16-NOV-2015
PROJECT LEADER: C. CARLSON	DRAWN BY:
DESIGNED BY: J. GRIFFIN	CHECKED BY: L. LACROIX
VT-15A UTILITES LAYOUT #2	SHEET 43 OF 148

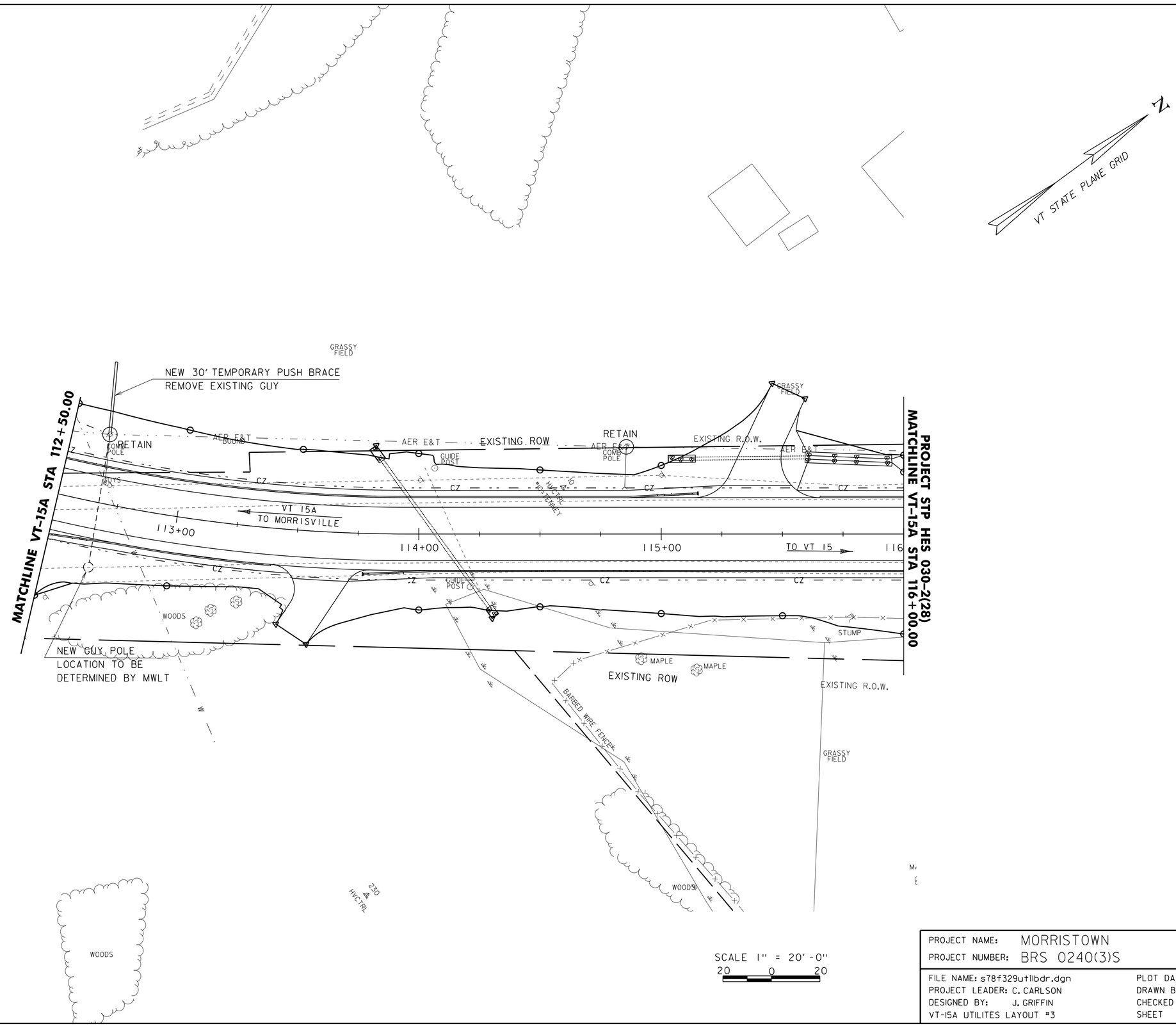

PROJECT NAME: MORRISTOWN	
PROJECT NUMBER: BRS 0240(3)S	
FILE NAME: s78f329utilbdr.dgn	PLOT DATE: 16-NOV-2015
PROJECT LEADER: C. CARLSON	DRAWN BY:
DESIGNED BY: J. GRIFFIN	CHECKED BY: L. LACROIX
VT-15A UTILITES LAYOUT #3	SHEET 44 OF 148

SLEEVES FOR UTILITIES

18 INCH SEPTIC SLEEVE
FROM STA. 207+87.40 17.30' RT
TO STA. 208+09.40 29.80' LT

12" INCH WATER SLEEVE
FROM STA. 208+94.70 26.00' LT
TO STA. 209+00.00 7.70' RT

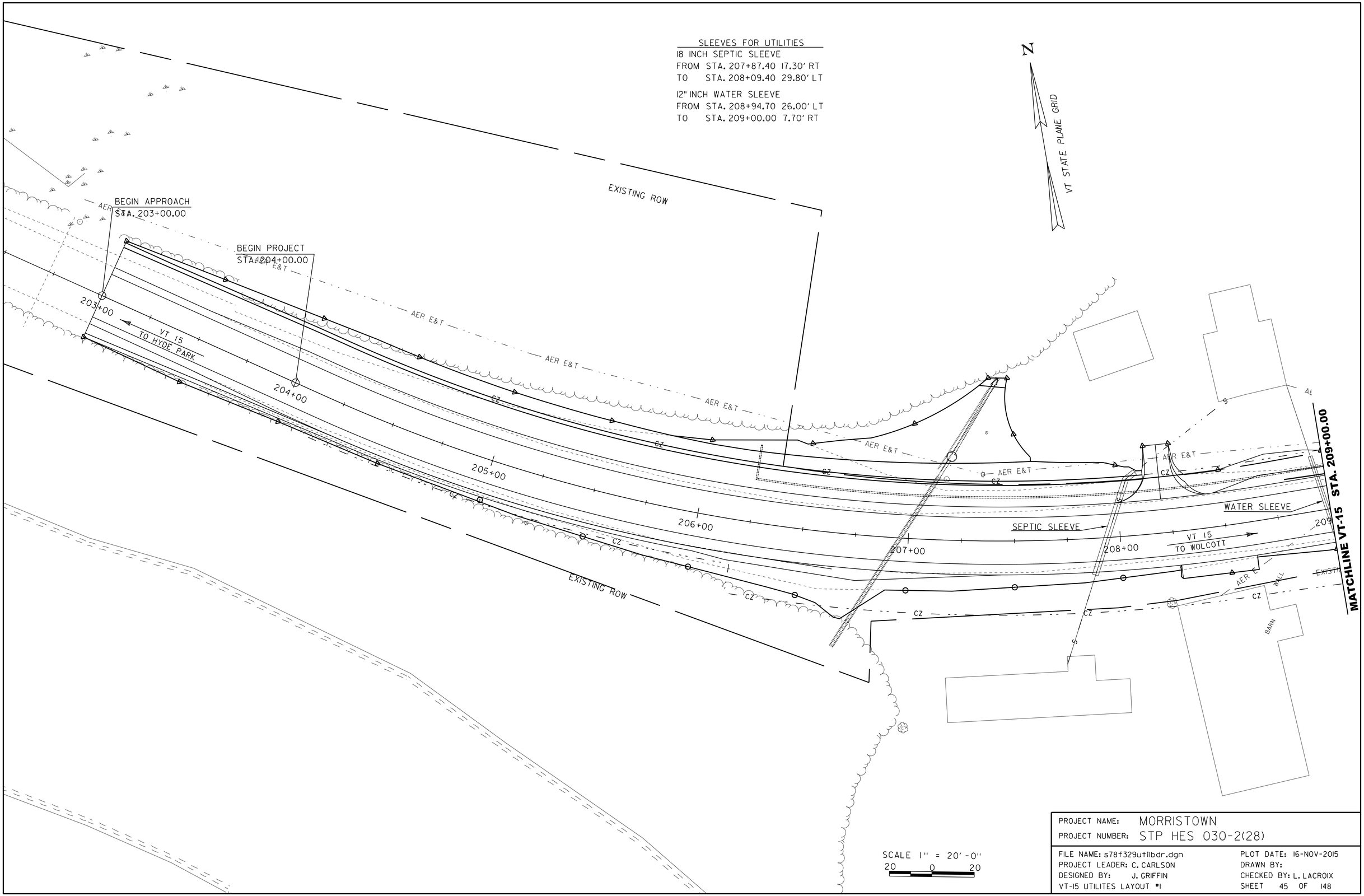

SCALE 1" = 20'-0"
20 0 20

PROJECT NAME: MORRISTOWN	
PROJECT NUMBER: STP HES 030-2(28)	
FILE NAME: s78f329utilbdr.dgn	PLOT DATE: 16-NOV-2015
PROJECT LEADER: C. CARLSON	DRAWN BY:
DESIGNED BY: J. GRIFFIN	CHECKED BY: L. LACROIX
VT-15 UTILITES LAYOUT #1	SHEET 45 OF 148

SLEEVES FOR UTILITIES

12" INCH WATER SLEEVE
FROM STA. 209+00.00 7.70' RT
TO STA. 209+01.50 17.00' RT

NOTE: CONTRACTOR TO NOTIFY MORRISVILLE WATER AND LIGHT DEPT. (MWLT) WITH A MINIMUM OF TWO WEEKS NOTICE FOR ONE 12 HOUR SHUT DOWN IF NEEDED FOR CATTLE PASS INSTILLATION BY CALLING MWLT AT (802)-888-3348.

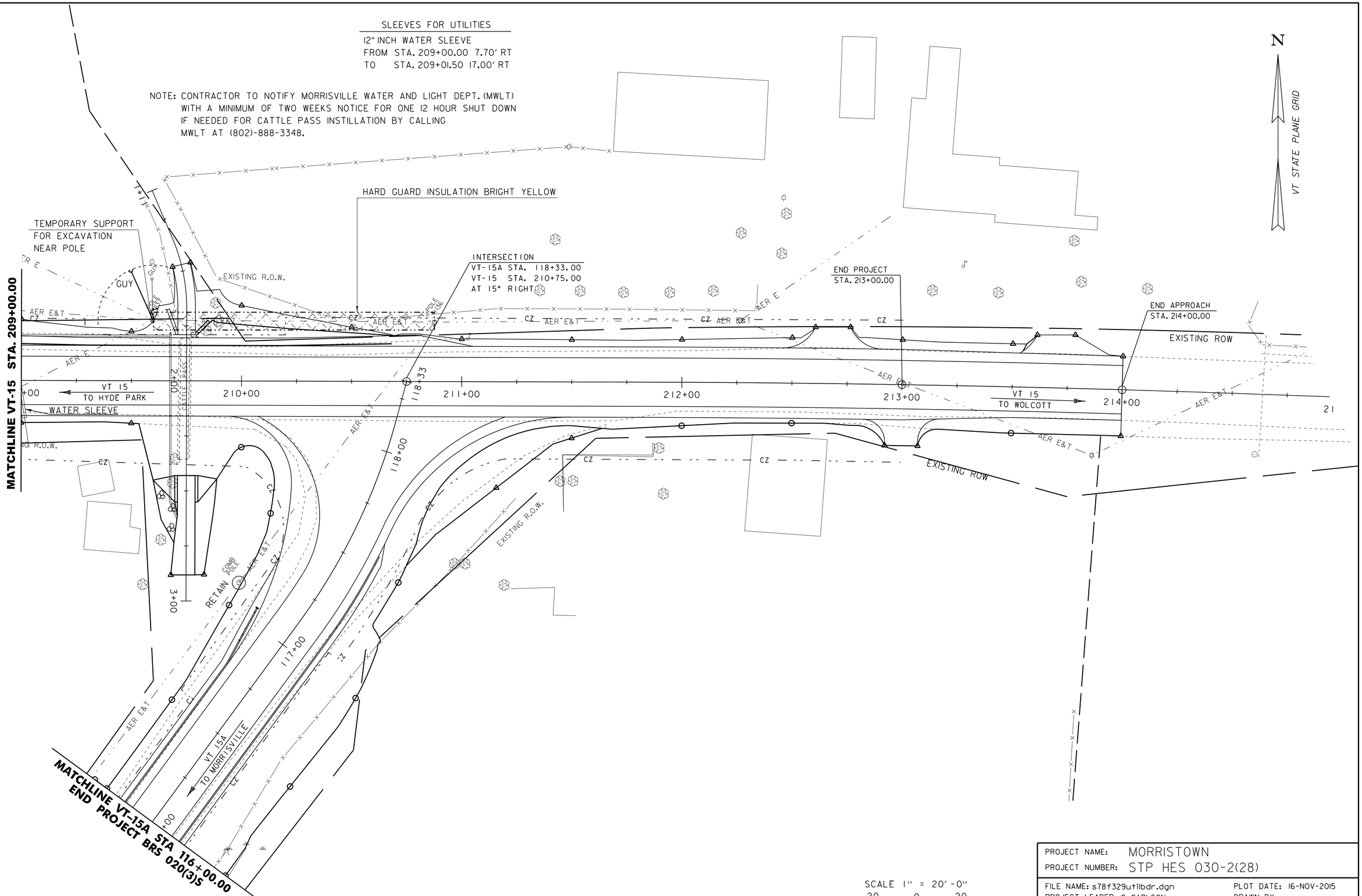

SCALE 1" = 20'-0"
20 0 20

PROJECT NAME: MORRISTOWN	
PROJECT NUMBER: STP HES 030-2(28)	
FILE NAME: s78f329utilbdr.dgn	PLOT DATE: 16-NOV-2015
PROJECT LEADER: C. CARLSON	DRAWN BY:
DESIGNED BY: J. GRIFFIN	CHECKED BY: L. LACROIX
VT-15 UTILITIES LAYOUT #2	SHEET 46 OF 148

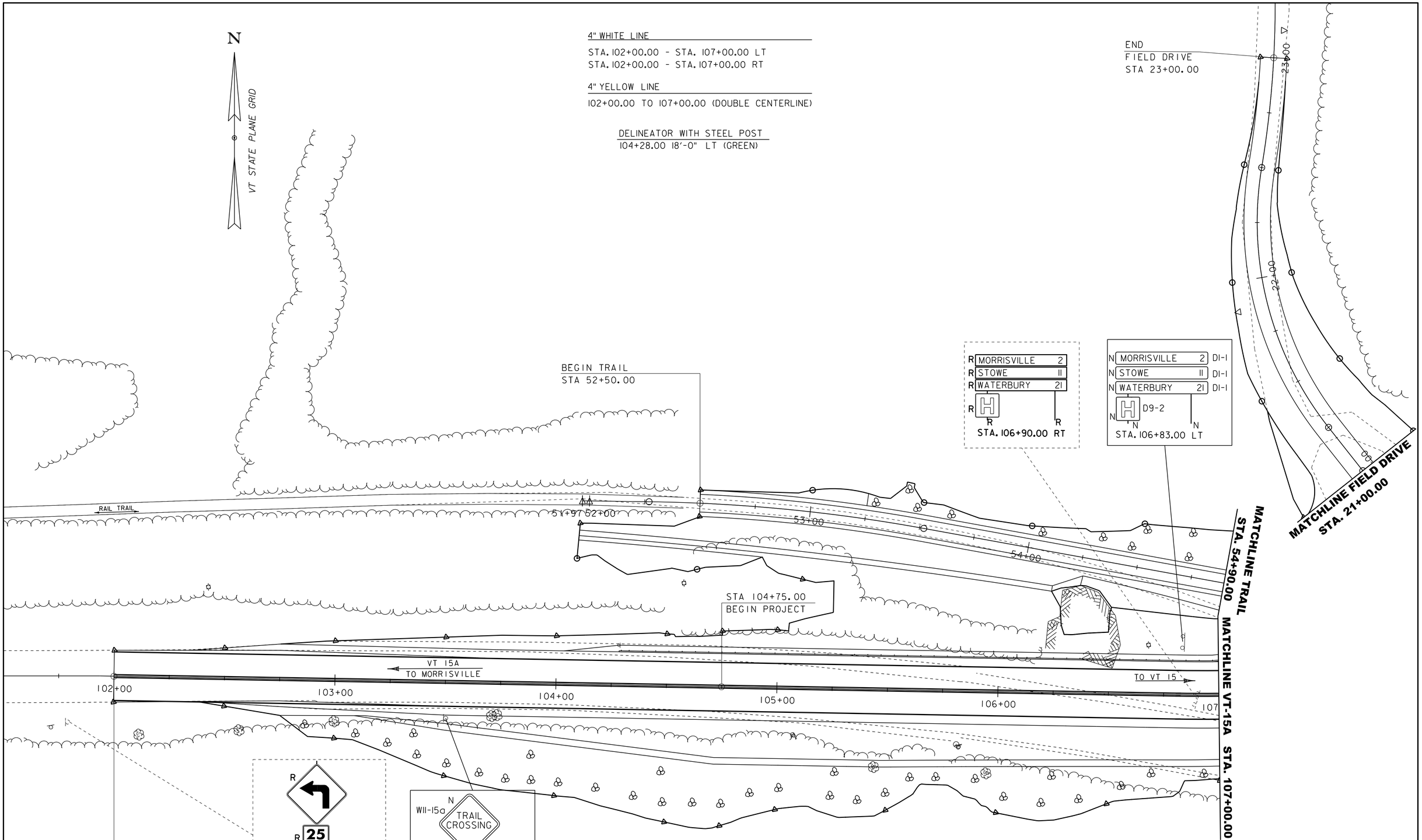

PROJECT NAME: MORRISTOWN	
PROJECT NUMBER: BRS 0240(3)S	
FILE NAME: s78f329signs.dgn	PLOT DATE: 16-NOV-2015
PROJECT LEADER: C. CARLSON	DRAWN BY:
DESIGNED BY: J. GRIFFIN	CHECKED BY: L. LACROIX
VT-15A SIGN LAYOUT #1	SHEET 47 OF 148

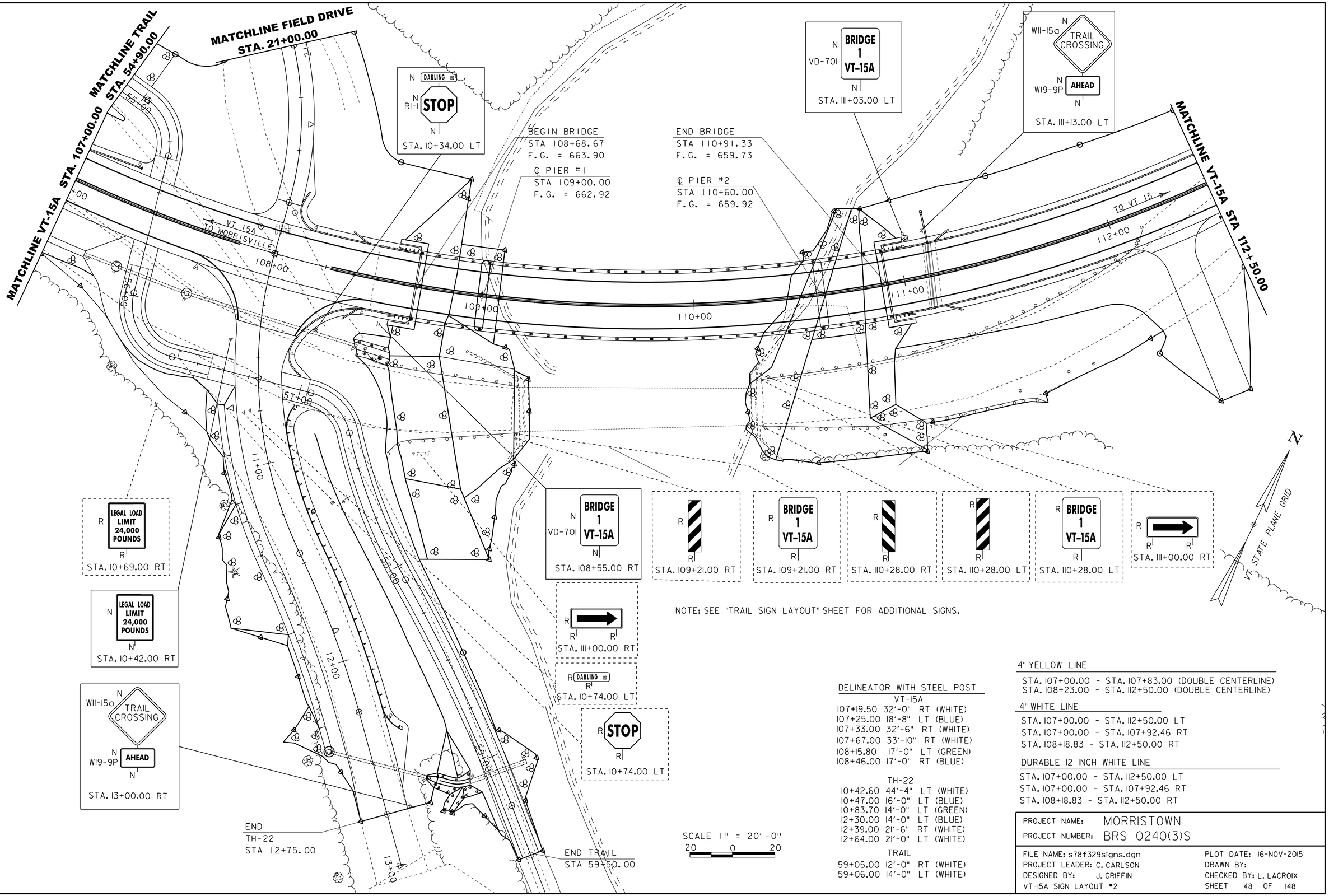

NOTE: SEE "TRAIL SIGN LAYOUT" SHEET FOR ADDITIONAL SIGNS.

SCALE 1" = 20'-0"
20 0 20

DELINEATOR WITH STEEL POST

VT-15A

107+19.50	32'-0"	RT	(WHITE)
107+25.00	18'-8"	LT	(BLUE)
107+33.00	32'-6"	RT	(WHITE)
107+67.00	33'-10"	RT	(WHITE)
108+15.80	17'-0"	LT	(GREEN)
108+46.00	17'-0"	RT	(BLUE)

TH-22

10+42.60	44'-4"	LT	(WHITE)
10+47.00	16'-0"	LT	(BLUE)
10+83.70	14'-0"	LT	(GREEN)
12+30.00	14'-0"	LT	(BLUE)
12+39.00	21'-6"	RT	(WHITE)
12+64.00	21'-0"	LT	(WHITE)

TRAIL

59+05.00	12'-0"	RT	(WHITE)
59+06.00	14'-0"	LT	(WHITE)

4" YELLOW LINE

STA. 107+00.00 - STA. 107+83.00 (DOUBLE CENTERLINE)
STA. 108+23.00 - STA. 112+50.00 (DOUBLE CENTERLINE)

4" WHITE LINE

STA. 107+00.00 - STA. 112+50.00 LT
STA. 107+00.00 - STA. 107+92.46 RT
STA. 108+18.83 - STA. 112+50.00 RT

DURABLE 12 INCH WHITE LINE

STA. 107+00.00 - STA. 112+50.00 LT
STA. 107+00.00 - STA. 107+92.46 RT
STA. 108+18.83 - STA. 112+50.00 RT

PROJECT NAME: MORRISTOWN
PROJECT NUMBER: BRS 0240(3)S

FILE NAME: s78f329signs.dgn
PROJECT LEADER: C. CARLSON
DESIGNED BY: J. GRIFFIN
VT-15A SIGN LAYOUT #2

PLOT DATE: 16-NOV-2015
DRAWN BY:
CHECKED BY: L. LACROIX
SHEET 48 OF 148

4" YELLOW LINE

STA. 112+50.00 - STA. 116+00.00 (DOUBLE CENTERLINE)

4" WHITE LINE

112+50.00 TO 116+00.00 RT
112+50.00 TO 116+00.00 LT

DELINEATOR WITH STEEL POST

STA. 113+40.00	19'-0" RT (GREEN)
STA. 113+75.00	20'-0" RT (BLUE)
STA. 113+87.00	31'-0" LT (WHITE)
STA. 114+34.00	34'-0" RT (WHITE)
STA. 115+13.00	29'-0" LT (WHITE)
STA. 115+14.00	20'-0" LT (BLUE)
STA. 115+58.00	30'-0" LT (WHITE)
STA. 115+65.00	19'-0" LT (GREEN)

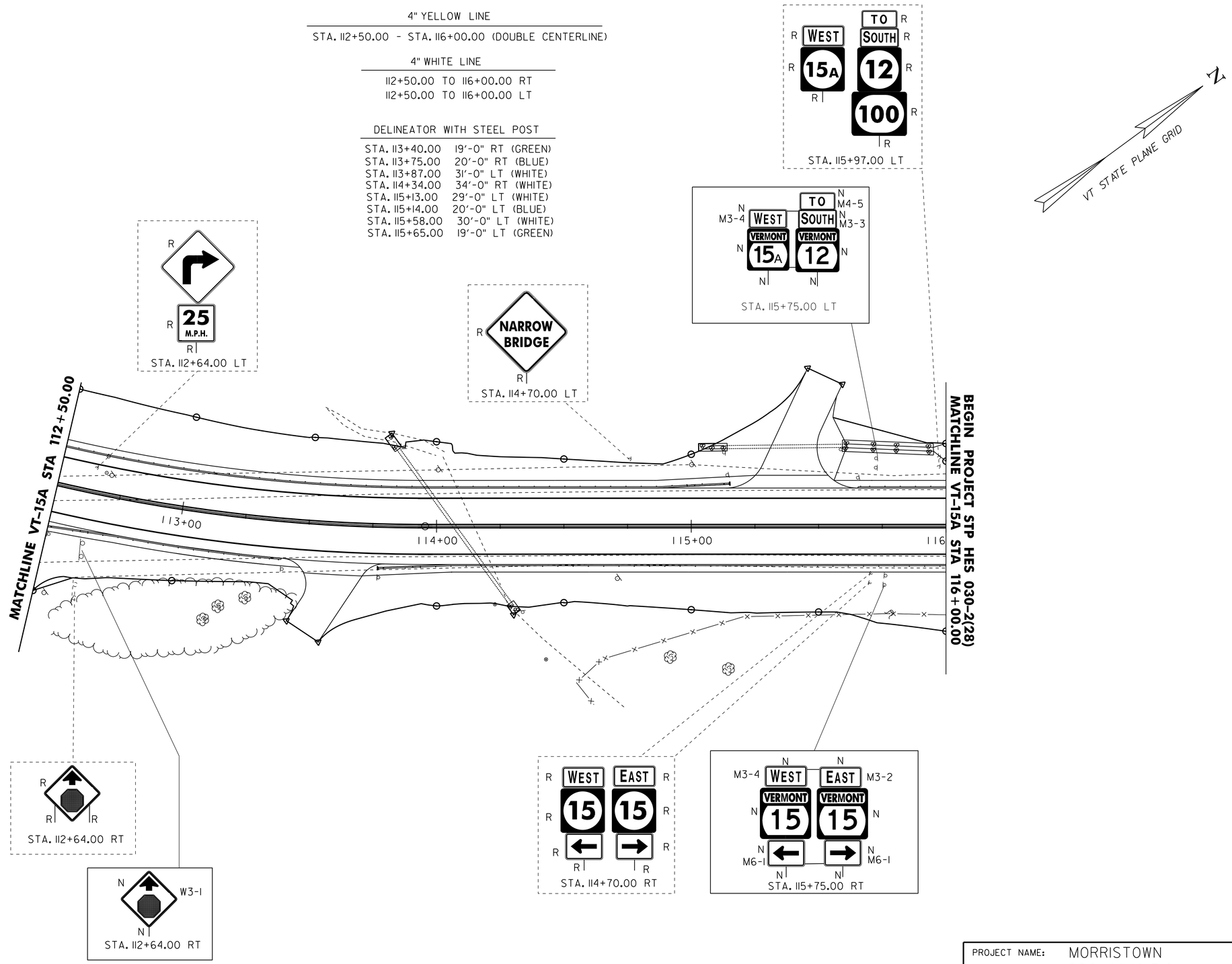

SCALE 1" = 20'-0"
20 0 20

PROJECT NAME:	MORRISTOWN
PROJECT NUMBER:	BRS 0240(3)S

FILE NAME: s78f329signs.dgn	PLOT DATE: 16-NOV-2015
PROJECT LEADER: C. CARLSON	DRAWN BY:
DESIGNED BY: J. GRIFFIN	CHECKED BY: L. LACROIX
VT-15A SIGN LAYOUT #3	SHEET 49 OF 148

DELINEATOR WITH STEEL POST

STA. 206+66.00 21'-0" RT (GREEN)
STA. 207+21.00 44'-0" LT (WHITE)

4" YELLOW LINE

STA. 203+00.00 - STA. 209+00.00 (DOUBLE CENTERLINE)

4" WHITE LINE

STA. 203+00.00 - STA. 209+00.00 LT
STA. 203+00.00 - STA. 209+00.00 RT

RELOCATE MAILBOX, SINGLE SUPORT

FROM STA. 207+87.00 OFFSET 30.7' LT
TO STA. 208+33.00 OFFSET 25.0' LT

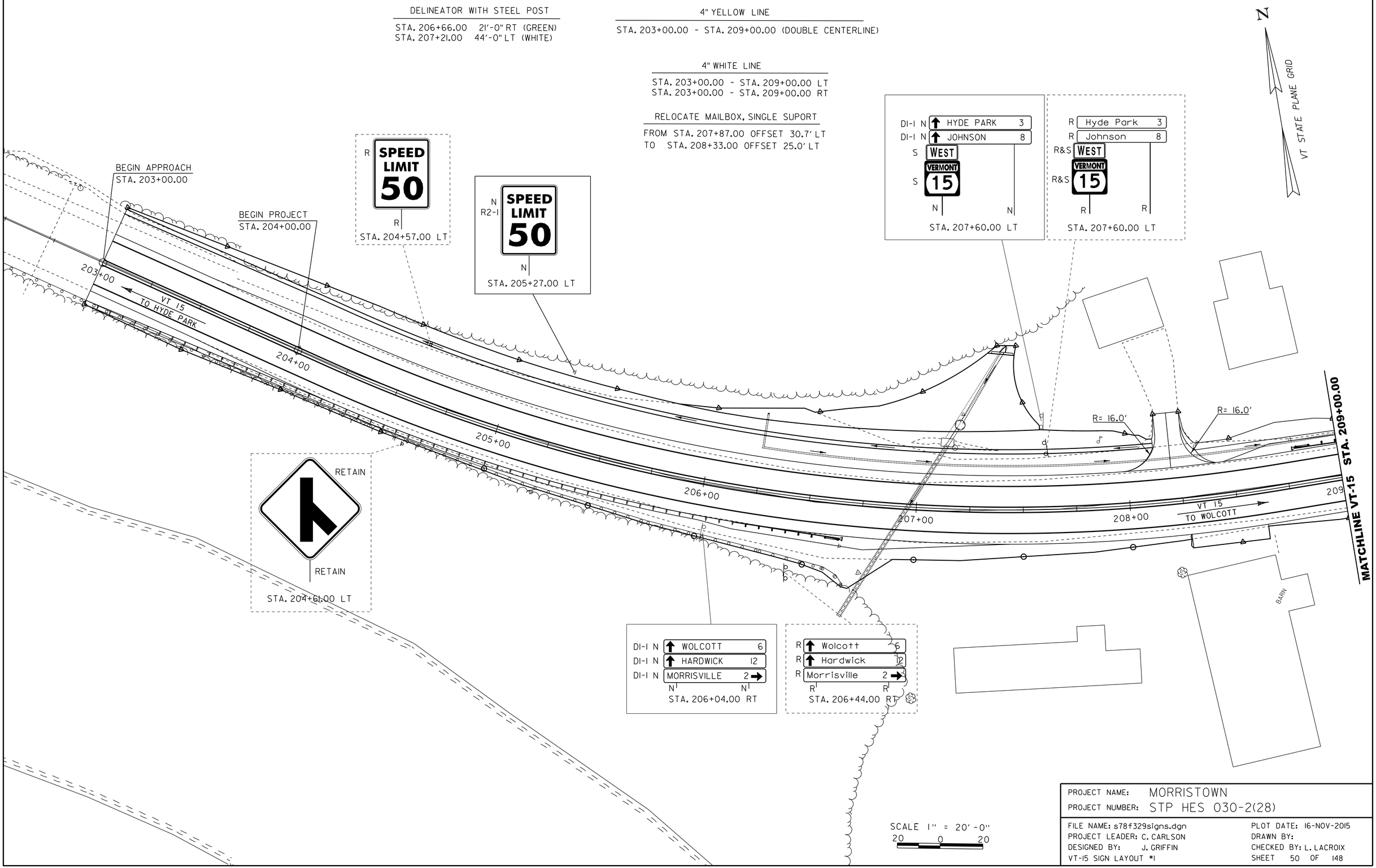

PROJECT NAME:	MORRISTOWN
PROJECT NUMBER:	STP HES 030-2(28)

FILE NAME: s78f329signs.dgn	PLOT DATE: 16-NOV-2015
PROJECT LEADER: C. CARLSON	DRAWN BY:
DESIGNED BY: J. GRIFFIN	CHECKED BY: L. LACROIX
VT-15 SIGN LAYOUT #1	SHEET 50 OF 148

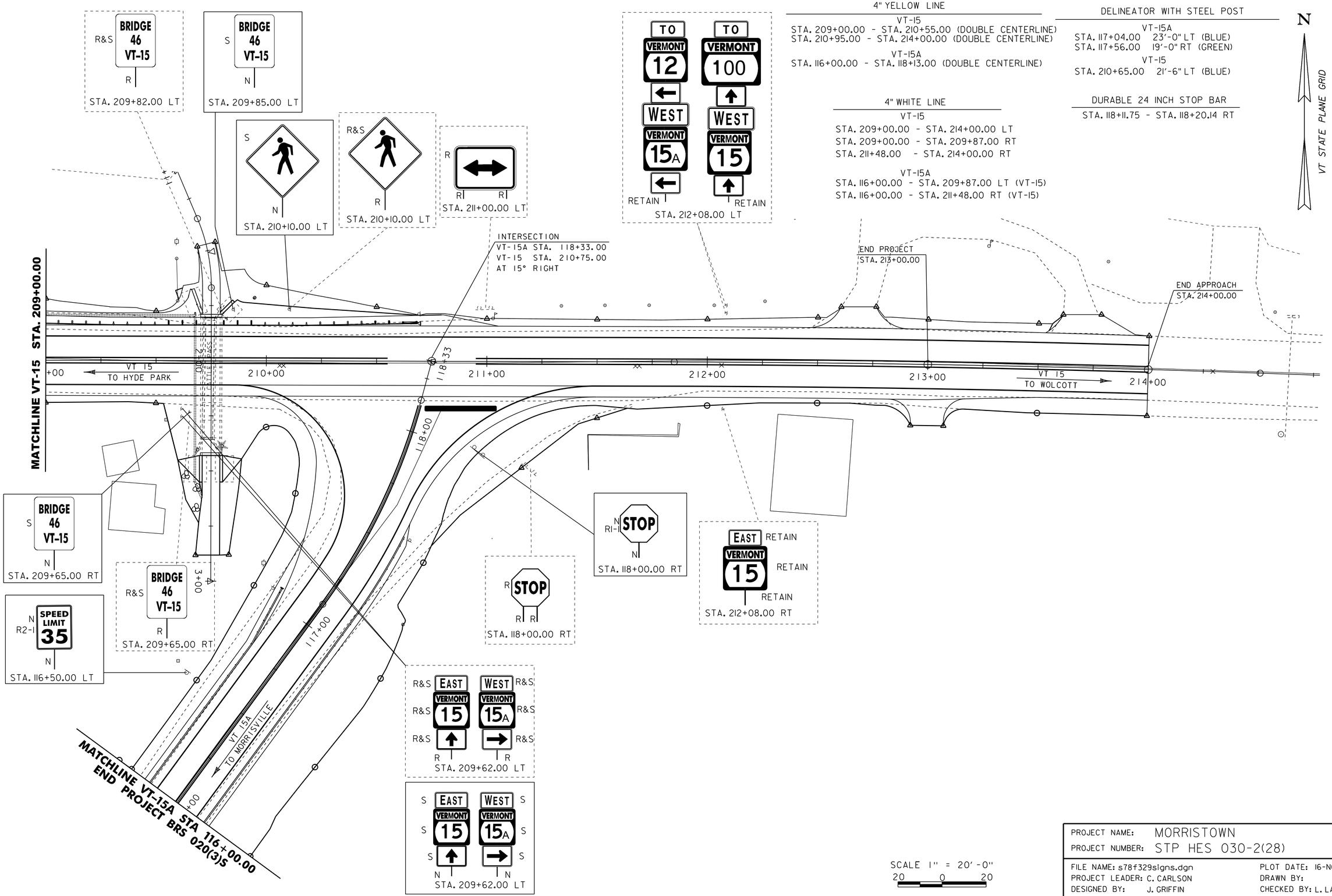

PROJECT NAME:	MORRISTOWN
PROJECT NUMBER:	STP HES 030-2(28)

FILE NAME: s78f329signs.dgn	PLOT DATE: 16-NOV-2015
PROJECT LEADER: C. CARLSON	DRAWN BY:
DESIGNED BY: J. GRIFFIN	CHECKED BY: L. LACROIX
VT-15 SIGN LAYOUT #2	SHEET 51 OF 148

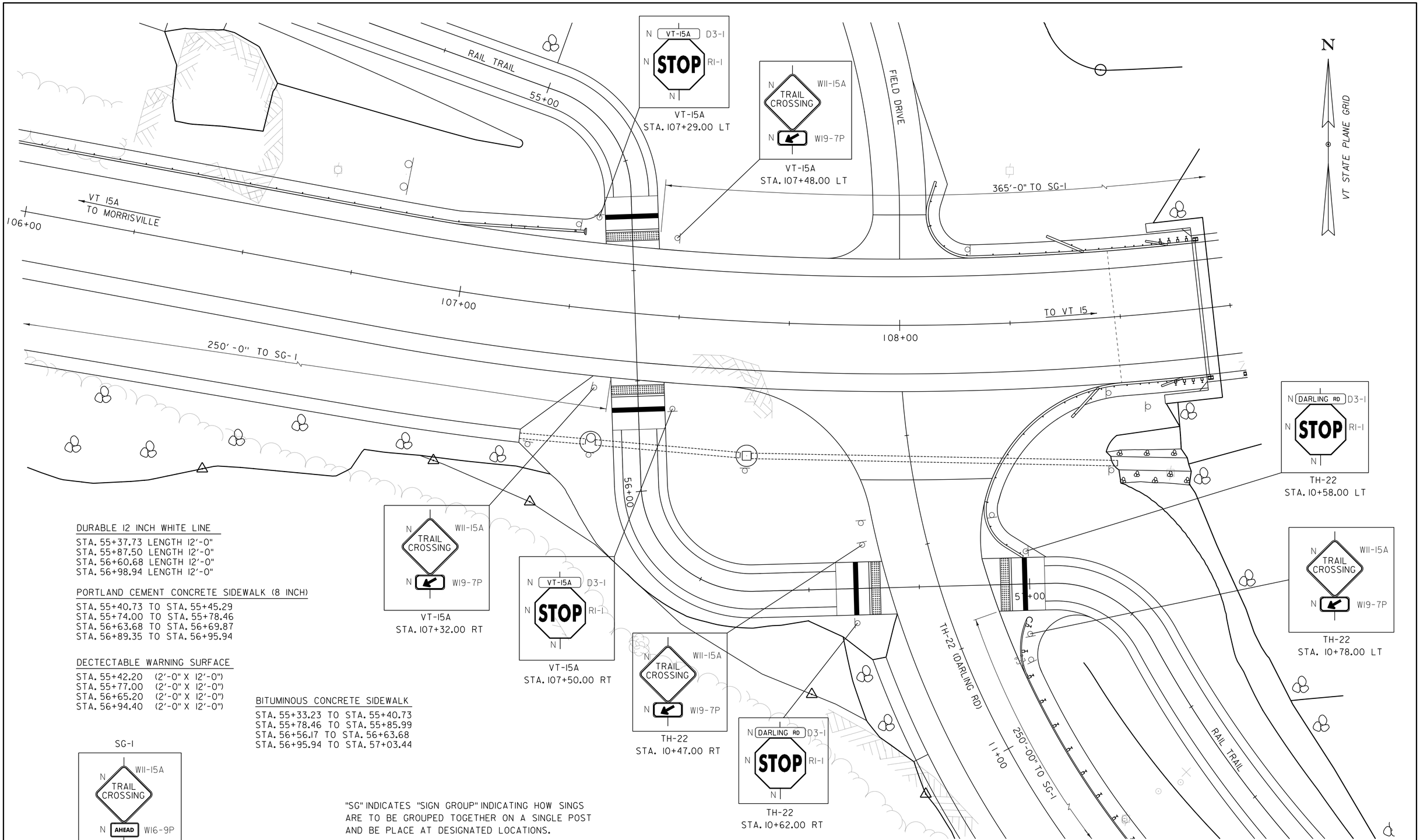

DURABLE 12 INCH WHITE LINE

STA. 55+37.73 LENGTH 12'-0"
STA. 55+87.50 LENGTH 12'-0"
STA. 56+60.68 LENGTH 12'-0"
STA. 56+98.94 LENGTH 12'-0"

PORTLAND CEMENT CONCRETE SIDEWALK (8 INCH)

STA. 55+40.73 TO STA. 55+45.29
STA. 55+74.00 TO STA. 55+78.46
STA. 56+63.68 TO STA. 56+69.87
STA. 56+89.35 TO STA. 56+95.94

DECTECTABLE WARNING SURFACE

STA. 55+42.20 (2'-0" X 12'-0")
STA. 55+77.00 (2'-0" X 12'-0")
STA. 56+65.20 (2'-0" X 12'-0")
STA. 56+94.40 (2'-0" X 12'-0")

BITUMINOUS CONCRETE SIDEWALK

STA. 55+33.23 TO STA. 55+40.73
STA. 55+78.46 TO STA. 55+85.99
STA. 56+56.17 TO STA. 56+63.68
STA. 56+95.94 TO STA. 57+03.44

"SG" INDICATES "SIGN GROUP" INDICATING HOW SINGS ARE TO BE GROUPED TOGETHER ON A SINGLE POST AND BE PLACE AT DESIGNATED LOCATIONS.

NOTE: SIGNS SHALL BE PLACED SUCH THAT THE EDGE OF THE SIGN IS NO CLOSER THAN 2'-0" AND NO FURTHER THAN 5'-0" FROM THE EDGE OF TRIAL AND 5'-0" FROM THE TRAIL SURFACE TO THE BOTTOM OF THE SIGN.

SCALE 1" = 10'-0"
10 0 10

PROJECT NAME: MORRISTOWN	
PROJECT NUMBER: BRS 0240(3)S	
FILE NAME: s78f329trail.dgn	PLOT DATE: 16-NOV-2015
PROJECT LEADER: C. CARLSON	DRAWN BY: R. PELLETT
DESIGNED BY: J. GRIFFIN	CHECKED BY: L. LACROIX
TRAIL SIGN LAYOUT	SHEET 52 OF 148

STATE OF VERMONT
AGENCY OF TRANSPORTATION

TRAFFIC SIGN SUMMARY SHEET 1

MILE MARKER, STATION OR SIGN NUMBER	SIGN LEGEND	SIGN DIMENSIONS			NEW & SALVAGED SIGNS				EXIST POST		NEW SIGN POSTS																				REMARKS	SIGN DETAIL	
											NO. OF	FLANGED CHANNEL			SQUARE STEEL (in)					TUBULAR ALUMINUM Ø (IN)			TUBULAR STEEL Ø (IN)				W-SHAPE STEEL							
		EACH	WIDTH (in)	HEIGHT (in)	"A"	"B"	SALV SIGN	SALV TIS	RETAIN	SALVAGE	POST	(LB / FT) 1.12	2.00	3.00	(LB / FT) 1.88	2.42	3.35	ANCHOR	SLEEVE	(LB / FT) 1.30	1.70	1.70	FOUNDATION	(LB / FT) 7.60	9.00	10.80	14.60	FTG. SIZE 24"	30"	WEIGHT	POST SIZE	SIGN FRAME REQUIRED		DETAIL ON SHEET NUMBER	STANDARD SHEET NUMBER
															1.75	2.00	2.50			3.00	4.00	4.0 MOD		3.00	3.50	4.00	5.00								
OPTION ITEMS																																		
	VT-15A																																	
103+50.00 RT	TRAIL CROSSING	1	30.0	30.0	5.0						1.0					15.0		X														W11-15a		SHSM
	AHEAD	1	24.0	12.0	2.0																											W19-9P		SHSM
106+83.00 LT	MORRISVILLE 2	1	72.0	12.0	6.0						2.0						16.0	X														D1-1		E-123
	STOWE II	1	72.0	12.0	6.0																											D1-1		E-123
	WATERBURY 21	1	72.0	12.0	6.0																											D1-1		E-123
	H	1	24.0	24.0	4.0																											D9-2		SHSM
107+29.00 LT	VT-15A	1	18.0	6.0	0.8						1.0					15.0		X														D3-1		SHSM
	STOP		18.0	18.0	3.0																											R1-1		SHSM
107+32.00 LT	TRAIL CROSSING	1	30.0	30.0	5.0						1.0					15.0		X														W11-15A		SHSM
	↙	1	24.0	12.0	2.0																											W19-7P		SHSM
107+48.00 LT	TRAIL CROSSING	1	30.0	30.0	5.0						1.0					15.0		X														W11-15A		SHSM
	↙	1	24.0	12.0	2.0																											W19-7P		SHSM
												FT .	FT .	FT .	FT .	FT 60.	FT 16.	XXXXX XXXXX XXXXX XXXXX	EA .	LB .	LB .	LB .		LB .	LB .	LB .	LB .							
		TOTALS			SF 46.75	SF .	EA. .	SF .	XXXXXXXXXX XXXXXXXXXX XXXXXXXXXX			FT .				FT 76.					LB .		EA.		LB .			EA. .	EA. .	LB .				

FINAL POST LENGTHS ARE TO BE DETERMINED IN THE FIELD. POST SIZES ARE COMPUTED BASED ON INFORMATION FURNISHED ON THE STANDARD SHEETS AND THE VTRANS "SIGN POST DESIGN GUIDELINE."

PROJECT NAME: MORRISTOWN
PROJECT NUMBER: BRS 0240(3)S

FILE NAME: s78f329TSS.dgn
PROJECT MANAGER: C. CARLSON
DESIGNED BY: J. GRIFFIN
TRAFFIC SIGN SUMMARY SHEET 1

PLOT DATE: 16-NOV-2015
DRAWN BY: R. PELLETT
CHECKED BY: L. LACROIX
SHEET 53 OF 148

STATE OF VERMONT
AGENCY OF TRANSPORTATION

TRAFFIC SIGN SUMMARY SHEET 2

MILE MARKER, STATION OR SIGN NUMBER	SIGN LEGEND	SIGN DIMENSIONS EACH	SIGN DIMENSIONS WIDTH (in)	SIGN DIMENSIONS HEIGHT (in)	NEW & SALVAGED SIGNS "A"	NEW & SALVAGED SIGNS "B"	NEW & SALVAGED SIGNS SALV SIGN	NEW & SALVAGED SIGNS SALV TIS	EXIST POST RETAIN	EXIST POST SALVAGE	NEW SIGN POSTS NO. OF POST	FLANGED CHANNEL (LB / FT) 1.12	FLANGED CHANNEL (LB / FT) 2.00	FLANGED CHANNEL (LB / FT) 3.00	SQUARE STEEL (in) 1.75 (LB / FT) 1.88	SQUARE STEEL (in) 2.00 (LB / FT) 2.42	SQUARE STEEL (in) 2.50 (LB / FT) 3.35	ANCHOR	SLEEVE	TUBULAR ALUMINUM Ø (IN) 3.00 (LB / FT) 1.30	TUBULAR ALUMINUM Ø (IN) 4.00 (LB / FT) 1.70	TUBULAR ALUMINUM Ø (IN) 4.0 MOD (LB / FT) 1.70	FOUNDATION	TUBULAR STEEL Ø (IN) 3.00 (LB / FT) 7.60	TUBULAR STEEL Ø (IN) 3.50 (LB / FT) 9.00	TUBULAR STEEL Ø (IN) 4.00 (LB / FT) 10.80	TUBULAR STEEL Ø (IN) 5.00 (LB / FT) 14.60	W-SHAPE STEEL FTG. SIZE 24"	W-SHAPE STEEL FTG. SIZE 30"	WEIGHT	POST SIZE	SIGN FRAME REQUIRED	REMARKS	SIGN DETAIL DETAIL ON SHEET NUMBER	SIGN DETAIL STANDARD SHEET NUMBER
OPTION ITEMS																																			
	VT-15A																																		
107+50.00 RT	VT-15A	1	18.0	6.0	0.8						1.0					15.0		X															D3-1		SHSM
	STOP	1	18.0	18.0	3.0																												R1-1		SHSM
108+55.00 RT	BRIDGE 1 VT-15A	1	6.0	8.0	0.3						1.0		7.0																				VD-701		E-134
111+03.00 LT	BRIDGE 1 VT-15A	1	6.0	8.0	0.3						1.0		7.0																				VD-701		E-134
111+13.00 LT	TRAIL CROSSING	1	30.0	30.0	5.0						1.0					15.0		X															W11-15a		SHSM
	AHEAD	1	24.0	12.0	2.0																												W19-9P		SHSM
112+64.00 RT		1	30.0	30.0	5.0						1.0					15.0		X															W3-1		SHSM
TOTALS					SF 16.38	SF .	EA. .	SF .	XXXXXXXXXXX XXXXXXXXXXX XXXXXXXXXXX		FT .	FT 14.	FT .	FT .	FT 45.	FT .	XXXXX XXXXX XXXXX XXXXX XXXXX	EA .	LB .	LB .	LB .	EA.	LB .	LB .	LB .	LB .	EA. .	EA. .	LB .				

FINAL POST LENGTHS ARE TO BE DETERMINED IN THE FIELD. POST SIZES ARE COMPUTED BASED ON INFORMATION FURNISHED ON THE STANDARD SHEETS AND THE VTRANS "SIGN POST DESIGN GUIDELINE."

PROJECT NAME: MORRISTOWN
PROJECT NUMBER: BRS 0240(3)S

FILE NAME: s78f329TSS.dgn
PROJECT MANAGER: C. CARLSON
DESIGNED BY: J. GRIFFIN
TRAFFIC SIGN SUMMARY SHEET 2

PLOT DATE: 16-NOV-2015
DRAWN BY: R. PELLETT
CHECKED BY: L. LACROIX

STATE OF VERMONT
AGENCY OF TRANSPORTATION

TRAFFIC SIGN SUMMARY SHEET 3

MILE MARKER, STATION OR SIGN NUMBER	SIGN LEGEND	SIGN DIMENSIONS EACH	WIDTH (in)	HEIGHT (in)	NEW & SALVAGED SIGNS "A"	"B"	SALV SIGN	SALV TIS	EXIST POST RETAIN	SALVAGE	NEW SIGN POSTS NO. OF POST	FLANGED CHANNEL (LB / FT) 1.12	2.00	3.00	SQUARE STEEL (in) (LB / FT) 1.75 1.88	2.00 2.42	2.50 3.35	ANCHOR	SLEEVE	TUBULAR ALUMINUM Ø (IN) (LB / FT) 3.00 1.30	4.00 1.70	4.0 MOD 1.70	FOUNDATION	TUBULAR STEEL Ø (IN) (LB / FT) 3.00 7.60	3.50 9.00	4.00 10.80	5.00 14.60	W-SHAPE STEEL FTG. SIZE 24"	30"	WEIGHT	POST SIZE	SIGN FRAME REQUIRED	REMARKS	SIGN DETAIL DETAIL ON SHEET NUMBER	STANDARD SHEET NUMBER
OPTION ITEMS																																			
	VT-15A																																		
115+75.00 RT	WEST	1	24.0	12.0	2.0						1.0					16.0		X															M3-4		SHSM
	VERMONT 15	1	24.0	24.0	4.0																												ROUTE MARKER ASSEBMBLY(FRAME #2) @ 28 1/2" STD. E-123		E-136B
	←	1	21.0	15.0	2.2																												M6-1		SHSM
	EAST	1	24.0	12.0	2.0						1.0					17.0		X															M3-4		SHSM
	VERMONT 15	1	24.0	24.0	4.0																												PART OF THE ROUTE MARKER ASSEMBLY ABOVE		E-136B
	→	1	21.0	15.0	2.2																												M6-1		SHSM
115+75.00 LT	WEST	1	24.0	12.0	2.0						1.0					15.0		X															M3-4		SHSM
	VERMONT 15A	1	24.0	24.0	4.0																												ROUTE MARKER ASSEBMBLY (FRAME #1) @ 28 1/2" WIDE, STD. E-123		E-136B
	TO	1	24.0	12.0	2.0						1.0					17.0		X															M4-5		SHSM
	SOUTH	1	24.0	12.0	2.0																												M3-3		SHSM
	VERMONT 12	1	24.0	24.0	4.0																												PART OF THE ROUTE MARKER ASSEMBLY ABOVE		E-136B
116+50.00 LT	SPEED LIMIT 35	1	24.0	30.0	5.0						1.0					15.0		X															R2-1		SHSM
118+00.00 RT	STOP	1	30.0	30.0	6.3						1.0					15.0		X															R1-1		SHSM
												FT .	FT .	FT .	FT .	FT 95.	FT .	XXXXX XXXXX XXXXX XXXXX	EA .	LB .	LB .	LB .		LB .	LB .	LB .	LB .							
TOTALS					SF 41.65	SF .	EA. .	SF .	XXXXXXXXXXX XXXXXXXXXXX XXXXXXXXXXX			FT .				FT 95.				LB .			EA.	LB .				EA. .	EA. .	LB .				

FINAL POST LENGTHS ARE TO BE DETERMINED IN THE FIELD. POST SIZES ARE COMPUTED BASED ON INFORMATION FURNISHED ON THE STANDARD SHEETS AND THE VTRANS "SIGN POST DESIGN GUIDELINE."

PROJECT NAME: MORRISTOWN
PROJECT NUMBER: BRS 0240(3)S

FILE NAME: s78f329TSS.dgn
PROJECT MANAGER: C. CARLSON
DESIGNED BY: J. GRIFFIN
TRAFFIC SIGN SUMMARY SHEET 3

PLOT DATE: 16-NOV-2015
DRAWN BY: R. PELLETT
CHECKED BY: L. LACROIX

STATE OF VERMONT
AGENCY OF TRANSPORTATION

TRAFFIC SIGN SUMMARY SHEET 4

MILE MARKER, STATION OR SIGN NUMBER	SIGN LEGEND	SIGN DIMENSIONS EACH	SIGN DIMENSIONS WIDTH (in)	SIGN DIMENSIONS HEIGHT (in)	NEW & SALVAGED SIGNS "A"	NEW & SALVAGED SIGNS "B"	SALV SIGN	SALV TIS	EXIST POST RETAIN	EXIST POST SALVAGE	NO. OF POST	FLANGED CHANNEL (LB / FT) 1.12	FLANGED CHANNEL 2.00	FLANGED CHANNEL 3.00	SQUARE STEEL (in) 1.75 (LB / FT) 1.88	SQUARE STEEL 2.00 (LB / FT) 2.42	SQUARE STEEL 2.50 (LB / FT) 3.35	ANCHOR	SLEEVE	TUBULAR ALUMINUM Ø (IN) 3.00 (LB / FT) 1.30	TUBULAR ALUMINUM 4.00 (LB / FT) 1.70	TUBULAR ALUMINUM 4.0 MOD (LB / FT) 1.70	FOUNDATION	TUBULAR STEEL Ø (IN) 3.00 (LB / FT) 7.60	TUBULAR STEEL 3.50 (LB / FT) 9.00	TUBULAR STEEL 4.00 (LB / FT) 10.80	TUBULAR STEEL 5.00 (LB / FT) 14.60	W-SHAPE STEEL FTG. SIZE 24"	W-SHAPE STEEL FTG. SIZE 30"	WEIGHT	POST SIZE	SIGN FRAME REQUIRED	REMARKS	SIGN DETAIL: DETAIL ON SHEET NUMBER	SIGN DETAIL: STANDARD SHEET NUMBER
OPTION ITEMS																																			
	VT-15																																		
205+27.00 LT	SPEED LIMIT 50	1	24.0	30.0	5.0						1.0					15.0		X															R2-1		SHSM
206+04.00 RT	↑ WOLCOTT 6	1	72.0	12.0	6.0						2.0						16.0	X															D1-1		E-123
	↑ HARDWICK 12	1	72.0	12.0	6.0																												D1-1		E-123
	MORRISVILLE 2 →	1	72.0	12.0	6.0																												D1-1		E-123
207+60.00 LT	↑ HYDE PARK 3	1	72.0	12.0	6.0						2.0					18.0		X															D1-1		E-123
	↑ JOHNSON 8	1	72.0	12.0	6.0																												D1-1		E-123
	WEST						1.0																										M3-4		SHSM
	VERMONT 15						1.0																												E-136B
												FT .	FT .	FT .	FT .	FT 33.	FT 16.	XXXXX XXXXX XXXXX XXXXX	EA .	LB .	LB .	LB .		LB .	LB .	LB .	LB .								
TOTALS					SF 35.	SF .	EA. 2.	SF .	XXXXXXXXXXX	XXXXXXXXXXX	XXXXXXXXXXX	FT .			FT 49.					LB .			EA.	LB .				EA. .	EA. .	LB .					

FINAL POST LENGTHS ARE TO BE DETERMINED IN THE FIELD. POST SIZES ARE COMPUTED BASED ON INFORMATION FURNISHED ON THE STANDARD SHEETS AND THE VTRANS "SIGN POST DESIGN GUIDELINE."

PROJECT NAME: MORRISTOWN
PROJECT NUMBER: STP HES 030-2(28)

FILE NAME: s78f329TSS.dgn
PLOT DATE: 16-NOV-2015
PROJECT MANAGER: C. CARLSON
DRAWN BY: R. PELLETT
DESIGNED BY: J. GRIFFIN
CHECKED BY: L. LACROIX
TRAFFIC SIGN SUMMARY SHEET 4

STATE OF VERMONT
AGENCY OF TRANSPORTATION

TRAFFIC SIGN SUMMARY SHEET 5

MILE MARKER, STATION OR SIGN NUMBER	SIGN LEGEND	SIGN DIMENSIONS			NEW & SALVAGED SIGNS				EXIST POST		NEW SIGN POSTS																					SIGN DETAIL	
											NO. OF	FLANGED CHANNEL			SQUARE STEEL (in)					TUBULAR ALUMINUM Ø (IN)			TUBULAR STEEL Ø (IN)				W-SHAPE STEEL						
		EACH	WIDTH (in)	HEIGHT (in)	"A"	"B"	SALV SIGN	SALV TIS	RETAIN	SALVAGE	POST	(LB / FT) 1.12	(LB / FT) 2.00	(LB / FT) 3.00	(LB / FT) 1.75 1.88	(LB / FT) 2.00 2.42	(LB / FT) 2.50 3.35	ANCHOR	SLEEVE	(LB / FT) 3.00 1.30	(LB / FT) 4.00 1.70	(LB / FT) 4.0 MOD 1.70	FOUNDATION	(LB / FT) 3.00 7.60	(LB / FT) 3.50 9.00	(LB / FT) 4.00 10.80	(LB / FT) 5.00 14.60	FTG. SIZE 24"	FTG. SIZE 30"	WEIGHT	POST SIZE	SIGN FRAME REQUIRED	REMARKS	DETAIL ON SHEET NUMBER	STANDARD SHEET NUMBER
OPTION ITEMS																																			
209+62.00 LT	EAST						1.0				1.0					15.0		X															M3-2		SHSM
	VERMONT 15						1.0																										ROUTE MARKER ASSEBMBLY (FRAME #1) @ 28 1/2" WIDE, STD. E-123		E-136B
	↑						1.0																										M6-3		SHSM
	WEST						1.0				1.0					15.0		X															M3-4		SHSM
	VERMONT 15A						1.0																										PART OF THE ROUTE MARKER ASSEMBLY ABOVE		E-136B
	→						1.0																										M6-1		SHSM
209+65.00 RT	BRIDGE 46 VT-15						1.0				1.0		7.0																				VD-701		E-134
209+85.00 RT	BRIDGE 46 VT-15						1.0				1.0		7.0																				VD-701		E-134
210+10.00 LT	🚶						1.0				1.0					15.0		X																	
	DARLING RD (TH-22)																																		
10+34.00 LT	DARLING RD	1	38.0	8.0	2.1						1.0					15.0		X															D3-1 (SEE "TRAIL CROSSING TYPICAL" SHEET)		SHSM
	STOP	1	30.0	30.0	6.3																												R1-1		SHSM
												FT .	FT 14.	FT .	FT .	FT 60.	FT .	XXXXX XXXXX XXXXX XXXXX	EA .	LB .	LB .	LB .		LB .	LB .	LB .	LB .							
	TOTALS				SF 8.35	SF .	EA. 9.	SF .	XXXXXXXXXXX XXXXXXXXXXX XXXXXXXXXXX			FT 14.				FT 60.				LB .			EA.	LB .				EA. .	EA. .	LB .				

FINAL POST LENGTHS ARE TO BE DETERMINED IN THE FIELD. POST SIZES ARE COMPUTED BASED ON INFORMATION FURNISHED ON THE STANDARD SHEETS AND THE VTRANS "SIGN POST DESIGN GUIDELINE."

PROJECT NAME: MORRISTOWN
PROJECT NUMBER: BRS 0240(3)S

FILE NAME: s78f329TSS.dgn
PROJECT MANAGER: C. CARLSON
DESIGNED BY: J. GRIFFIN
TRAFFIC SIGN SUMMARY SHEET 5

PLOT DATE: 16-NOV-2015
DRAWN BY: R. PELLETT
CHECKED: L. LACROIX

STATE OF VERMONT
AGENCY OF TRANSPORTATION

TRAFFIC SIGN SUMMARY SHEET 6

MILE MARKER, STATION OR SIGN NUMBER	SIGN LEGEND	SIGN DIMENSIONS EACH	WIDTH (in)	HEIGHT (in)	NEW & SALVAGED SIGNS "A"	"B"	SALV SIGN	SALV TIS	EXIST POST RETAIN	SALVAGE	NEW SIGN POSTS NO. OF POST	FLANGED CHANNEL (LB / FT) 1.12	2.00	3.00	SQUARE STEEL (in) (LB / FT) 1.75	2.00	2.50	ANCHOR	SLEEVE	TUBULAR ALUMINUM Ø (IN) (LB / FT) 3.00	4.00	4.0 MOD	FOUNDATION	TUBULAR STEEL Ø (IN) (LB / FT) 3.00	3.50	4.00	5.00	W-SHAPE STEEL FTG. SIZE 24"	30"	WEIGHT	POST SIZE	SIGN FRAME REQUIRED	REMARKS	SIGN DETAIL DETAIL ON SHEET NUMBER	STANDARD SHEET NUMBER
	OPTION ITEMS																																		
	DARLING RD (TH-22)																																		
10+42.00 RT	LEGAL LOAD LIMIT 24,000 POUNDS	1	24.0	30.0	5.0						1.0					15.0		X														VR-017		E-141
10+47.00 RT	TRAIL CROSSING	1	30.0	30.0	5.0						1.0					15.0		X														W11-15A		SHSM
	↙	1	24.0	12.0	2.0																											W19-7P		SHSM
10+58.00 LT	DARLING RD	1	38.0	8.0	2.1						1.0					15.0		X														D3-1 (SEE "TRAIL CROSSING TYPICAL" SHEET)		SHSM
	STOP	1	18.0	18.0	3.0																											R1-1		SHSM
10+62.00 RT	DARLING RD	1	38.0	8.0	2.1						1.0					15.0		X														D3-1 (SEE "TRAIL CROSSING TYPICAL" SHEET)		SHSM
	STOP	1	18.0	18.0	3.0																											R1-1		SHSM
10+78.00 LT	TRAIL CROSSING	1	30.0	30.0	5.0						1.0					15.0		X														W11-15a		SHSM
	↙	1	24.0	12.0	2.0																											W19-9P		SHSM
13+00.00 RT	TRAIL CROSSING	1	30.0	30.0	5.0						1.0					15.0		X														W11-15a		SHSM
	AHEAD	1	24.0	12.0	2.0																											W19-9P		SHSM
												FT .	FT .	FT .	FT .	FT 90.	FT .	XXXXX XXXXX XXXXX XXXXX	EA .	LB .	LB .	LB .		LB .	LB .	LB .	LB .							
	TOTALS				SF 36.2	SF .	EA. .	SF .	XXXXXXXXXXX XXXXXXXXXXX XXXXXXXXXXX			FT .			FT 90.					LB .			EA.	LB .				EA. .	EA. .	LB .				

FINAL POST LENGTHS ARE TO BE DETERMINED IN THE FIELD. POST SIZES ARE COMPUTED BASED ON INFORMATION FURNISHED ON THE STANDARD SHEETS AND THE VTRANS "SIGN POST DESIGN GUIDELINE."

PROJECT NAME: MORRISTOWN
PROJECT NUMBER: BRS 0240(3)S

FILE NAME: s78f329TSS.dgn
PROJECT MANAGER: C. CARLSON
DESIGNED BY: J. GRIFFIN
TRAFFIC SIGN SUMMARY SHEET 6

PLOT DATE: 16-NOV-2015
DRAWN BY: R. PELLETT
CHECKED L. LACROIX
SHEET 58 OF 148

SOIL CLASSIFICATION

AASHTO

A1	Gravel and Sand
A3	Fine Sand
A2	Silty or Clayey Gravel and Sand
A4	Silty Soil - Low Compressibility
A5	Silty Soil - Highly Compressible
A6	Clayey Soil - Low Compressibility
A7	Clayey Soil - Highly Compressible

ROCK QUALITY DESIGNATION

R.Q.D. (%)	ROCK DESCRIPTION
<25	Very Poor
25 to 50	Poor
51 to 75	Fair
76 to 90	Good
>90	Excellent

SHEAR STRENGTH

UNDRAINED SHEAR STRENGTH IN P.S.F.	CONSISTENCY
<250	Very Soft
250-500	Soft
500-1000	Med. Stiff
1000-2000	Stiff
2000-4000	Very Stiff
>4000	Hard

CORRELATION GUIDE OF "N" TO DENSITY/CONSISTENCY

DENSITY (GRANULAR SOILS) N	DENSITY DESCRIPTIVE TERM	CONSISTENCY (COHESIVE SOILS) N	CONSISTENCY DESCRIPTIVE TERM
<5	Very Loose	<2	Very Soft
5-10	Loose	2-4	Soft
11-24	Med. Dense	5-8	Med. Stiff
25-50	Dense	9-15	Stiff
>50	Very Dense	16-30	Very Stiff
		31-60	Hard
		>60	Very Hard

COMMONLY USED SYMBOLS

▼	Water Elevation
⊗	Standard Penetration Boring
⊕	Auger Boring
⊙	Rod Sounding
S	Sample
N	Standard Penetration Test Blow Count Per Foot For: 2" O.D. Sampler 1 3/8" I.D. Sampler Hammer Weight Of 140 Lbs. Hammer Fall Of 30"
VS	Field Vane Shear Test
US	Undisturbed Soil Sample
B	Blast
DC	Diamond Core
MD	Mud Drill
WA	Wash Ahead
HSA	Hollow Stem Auger
AX	Core Size 1 1/8"
BX	Core Size 1 5/8"
NX	Core Size 2 1/8"
M	Double Tube Core Barrel Used
LL	Liquid Limit
PL	Plastic Limit
PI	Plasticity Index
NP	Non Plastic
w	Moisture Content (Dry Wgt. Basis)
D	Dry
M	Moist
MTW	Moist To Wet
W	Wet
Sat	Saturated
Bo	Boulder
Gr	Gravel
Sa	Sand
Si	Silt
Cl	Clay
HP	Hardpan
Le	Ledge
NLTD	No Ledge To Depth
CNPF	Can Not Penetrate Further
TLOB	Top of Ledge Or Boulder
NR	No Recovery
Rec.	Recovery
%Rec.	Percent Recovery
RQD	Rock Quality Designation
CBR	California Bearing Ratio
<	Less Than
>	Greater Than
R	Refusal (N > 100)
VTSPG	NAD83 - See Note 7

COLOR

blk	Black	pnk	Pink
bl	Blue	pu	Purple
brn	Brown	rd	Red
dk	Dark	tn	Tan
gry	Gray	wh	White
gn	Green	yel	Yellow
lt	Light	mltc	Multicolored
or	Orange		

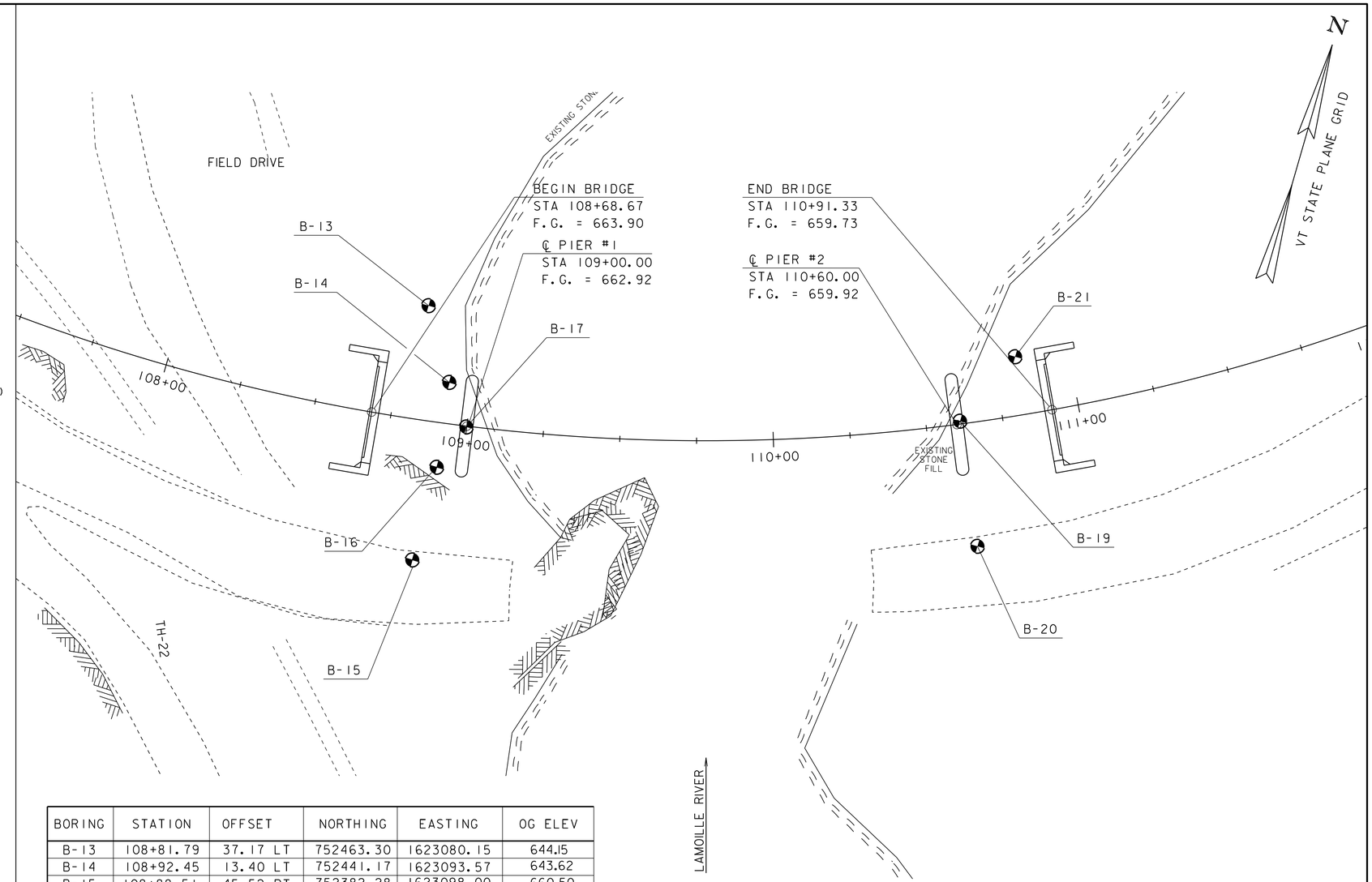

BORING	STATION	OFFSET	NORTHING	EASTING	OG ELEV
B-13	108+81.79	37.17 LT	752463.30	1623080.15	644.15
B-14	108+92.45	13.40 LT	752441.17	1623093.57	643.62
B-15	108+88.51	45.52 RT	752382.28	1623098.00	660.50
B-16	108+92.10	14.53 RT	752413.48	1623097.30	644.29
B-17	108+99.88	0.28 RT	752428.77	1623102.92	643.79
B-19	110+61.15	0.94 LT	752475.13	1623256.85	643.88
B-20	110+61.44	40.20 RT	752437.56	1623273.59	653.31
B-21	110+82.30	19.06 LT	752500.27	1623268.26	645.59

BORING INFORMATION SHEET

SCALE 1" = 20'-0"

20 0 20

DEFINITIONS (AASHTO)

BEDROCK (LEDGE) - Rock in its native location of indefinite thickness.

BOULDER - A rock fragment with an average dimension > 12 inches.

COBBLE - Rock fragments with an average dimension between 3 and 12 inches.

GRAVEL - Rounded particles of rock < 3" and > 0.0787" (#10 sieve).

SAND - Particles of rock < 0.0787" (#10 sieve) and > 0.0029" (#200 sieve).

SILT - Soil < 0.0029" (#200 sieve), non or slightly plastic and exhibits no strength when air-dried.

CLAY - Fine grained soil, exhibits plasticity when moist and considerable strength when air-dried.

VARVED - Alternate layers of silt and clay.

HARDPAN - Extremely dense soil, cemented layer, not softened when wet.

MUCK - Soft organic soil (containing > 10% organic material.

MOISTURE CONTENT - Weight of water divided by dry weight of soil.

FLOWING SAND - Granular soil so saturated (loose) that it flows into drill casing during extraction of wash rod.

STRIKE - Angle from magnetic north to line of intersection of bed with a horizontal plane.

DIP - Inclination of bed with a horizontal plane.

GENERAL NOTES

1. The subsurface explorations shown herein were made between 04-13-05 and 05-13-05 by the Agency.
2. Soil and rock classifications, properties and descriptions are based on engineering interpretation from available subsurface information by the Agency and may not necessarily reflect actual variations in subsurface conditions that may be encountered between individual boring or sample locations.
3. Observed water levels and/or conditions indicated are as recorded at the time of exploration and may vary according to the prevailing rainfall, methods of exploration and other factors.
4. Engineering judgment was exercised in preparing the subsurface information presented herein. Analysis and interpretation of subsurface data was performed and interpreted for Agency design and estimating purposes. Presentation of the information in the Contract is intended to provide the Contractor access to the same data available to the Agency. The subsurface information is presented in good faith and is not intended as a substitute for personal investigation, independent interpretation, independent analysis or judgment by the Contractor.
5. Pictorial structure details shown on the boring plan layout or soils profile are for illustrative purposes only and may not accurately portray final contract details.
6. Terminology used on boring logs to describe the hardness, degree of weathering, and spacing of fractures, joints and other discontinuities in the bedrock is defined in the AASHTO Manual on Subsurface Investigations, 1988.
7. Northing and Easting coordinates are shown in Vermont State Plane Grid North American Datum 1983 in meters and survey feet.

PROJECT NAME: MORRISTOWN
PROJECT NUMBER: BRS 0240(3)S

FILE NAME: 78F329/STR/s78f329bor.dgn
PROJECT LEADER: C. CARLSON
DESIGNED BY: J.GRIFFIN
BORING INFORMATION SHEET

PLOT DATE: 16-NOV-2015
DRAWN BY:
CHECKED BY: L. LACROIX
SHEET 59 OF 148

B-13 OLD ALG STA. 66+482.9 OFFSET -36.09
B-13 NEW ALG. STA. 108+81.79 OFFSET -37.17

STATE OF VERMONT
AGENCY OF TRANSPORTATION
MATERIALS & RESEARCH SECTION
SUBSURFACE INFORMATION

BORING NUMBER: B-13
SHEET 1 of 1
DATE STARTED: 4/19/05
DATE COMPLETED: 4/19/05

PROJECT NAME: MORRISTOWN
SITE NAME: RT 15-A
STATION: 66+482.9
OFFSET: -36.09
VTSPG NAD83:

PROJECT NUMBER: BRS 0240(3)S
SITE NUMBER: ROADWAY
GROUND ELEVATION: 643.83 ft
GROUNDWATER DEPTH: 3.28 ft 4/19/05
PROJECT PIN NUMBER: 78F329

BORING CREW
CREW CHIEF: TALLMAN
DRILLER: TALLMAN
LOGGER: RUSSELL

BORING RIG: TRUCK
BORING TYPE: WASH BORE
SAMPLE TYPE: SPLIT BARREL
CHECKED BY: DLG

DEPTH (ft)	SYMBOL	CLASSIFICATION OF MATERIALS (Description)	N VALUE / RUN	M.C. (%) / REC (%)	GRAVEL (%) / RQD (%)	SAND (%) / Dip (deg)	FINES (%) / Drill Rate (min/ft)
2.5		Various stones, cobbles, and boulder, 1.64 ft - 4.59 ft					
5.0		No sample, Boulder, 4.59 ft - 5.91 ft					
		Top of Bedrock @ 6.89 ft					
7.5		6.89 ft - 11.81 ft, Gray, Quartz-sericite-garnet schist, Moderately hard, Unweathered, NXMDC, Competent	1	100	83	50	8 7 6 7 7
10.0							
12.5		11.81 ft - 16.73 ft, Gray, Quartz-sericite-garnet schist, Moderately hard, Unweathered, NXMDC, with 0.65' thick quartz vein at 13.85', Competent	2	100	89	50	6 7 8 8 9
15.0							
17.5		Hole stopped @ 16.73 ft					

LOG OF BORING MORRISTOWN BRS0240(3)ENGLISH.GPJ VT AOT.GDT 4/28/14

B-14 OLD ALG STA. 66+492.58 OFFSET -13.12
B-14 NEW ALG. STA. 108+92.45 OFFSET -13.40

STATE OF VERMONT
AGENCY OF TRANSPORTATION
MATERIALS & RESEARCH SECTION
SUBSURFACE INFORMATION

BORING NUMBER: B-14
SHEET 1 of 1
DATE STARTED: 4/15/05
DATE COMPLETED: 4/18/05

PROJECT NAME: MORRISTOWN
SITE NAME: RT 15-A
STATION: 66+492.58
OFFSET: -13.12
VTSPG NAD83:

PROJECT NUMBER: BRS 0240(3)S
SITE NUMBER: ROADWAY
GROUND ELEVATION: 644.75 ft
GROUNDWATER DEPTH: 4.27 ft 4/18/05
PROJECT PIN NUMBER: 78F329

BORING CREW
CREW CHIEF: TALLMAN
DRILLER: TALLMAN
LOGGER: RUSSELL

BORING RIG: TRUCK
BORING TYPE: WASH BORE
SAMPLE TYPE: SPLIT BARREL
CHECKED BY: DLG

DEPTH (ft)	SYMBOL	CLASSIFICATION OF MATERIALS (Description)	N VALUE / RUN	M.C. (%) / REC (%)	GRAVEL (%) / RQD (%)	SAND (%) / Dip (deg)	FINES (%) / Drill Rate (min/ft)
2.5							
5.0		Unable to retrieve sample, Appears to be a course sand, 4.92 ft - 6.89 ft	10				
7.5							
		Top of Bedrock @ 9.68 ft					
10.0		9.68 ft - 14.6 ft, Gray, Quartz-sericite schist, Moderately hard, Unweathered, NXMDC, Competent	1	100	87	35	12 7 7 7 8
12.5							
15.0		14.6 ft - 19.52 ft, Gray, Quartz-sericite schist, Moderately hard, Unweathered, NXMDC, Competent	2	100	99	35	8 9 8 8 8
17.5							
20.0		Hole stopped @ 19.52 ft					
22.5							

LOG OF BORING MORRISTOWN BRS0240(3)ENGLISH.GPJ VT AOT.GDT 4/28/14

B-15 OLD ALG STA. 66+492.58 OFFSET 45.93
B-15 NEW ALG. STA. 108+88.51 OFFSET 45.52

STATE OF VERMONT
AGENCY OF TRANSPORTATION
MATERIALS & RESEARCH SECTION
SUBSURFACE INFORMATION

BORING NUMBER: B-15
SHEET 1 of 1
DATE STARTED: 4/20/05
DATE COMPLETED: 4/20/05

PROJECT NAME: MORRISTOWN
SITE NAME: RT 15-A
STATION: 66+492.58
OFFSET: 45.93
VTSPG NAD83:

PROJECT NUMBER: BRS 0240(3)S
SITE NUMBER: ROADWAY
GROUND ELEVATION: 660.42 ft
GROUNDWATER DEPTH: No Water 4/20/05
PROJECT PIN NUMBER: 78F329

BORING CREW
CREW CHIEF: TALLMAN
DRILLER: TALLMAN
LOGGER: RUSSELL

BORING RIG: TRUCK
BORING TYPE: WASH BORE
SAMPLE TYPE: SPLIT BARREL
CHECKED BY: DLG

DEPTH (ft)	SYMBOL	CLASSIFICATION OF MATERIALS (Description)	N VALUE / RUN	M.C. (%) / REC (%)	GRAVEL (%) / RQD (%)	SAND (%) / Dip (deg)	FINES (%) / Drill Rate (min/ft)
		Asphalt, 0.0 ft - 0.66 ft					
2.5							
		Top of Bedrock @ 3.28 ft					
5.0		3.28 ft - 8.2 ft, Gray, Sericite-quartz phyllitic Schist, Moderately hard, Unweathered, NXMDC, Competent	1	87	70	30	8 8 8 6 8
7.5							
10.0		8.2 ft - 13.12 ft, Gray, Sericite-quartz phyllitic Schist, Moderately hard, Unweathered, NXMDC, Competent	2	100	100	30	5 6 5 6 7
12.5							
		Hole stopped @ 13.12 ft					
15.0							
17.5							

LOG OF BORING MORRISTOWN BRS0240(3)ENGLISH.GPJ VT AOT.GDT 4/28/14

PROJECT NAME: MORRISTOWN
PROJECT NUMBER: BRS 0240(3)S

FILE NAME: 78f329\STR\s78f329borlog.dgn
PROJECT LEADER: C. CARLSON
DESIGNED BY: M&R
BORING LOGS #1

PLOT DATE: 16-NOV-2015
DRAWN BY: M&R
CHECKED BY: M&R
SHEET 60 OF 148

B-16 OLD ALG STA. 66+494.22 OFFSET -14.76
B-16 NEW ALG. STA. 108+92.101 OFFSET 14.53

STATE OF VERMONT
AGENCY OF TRANSPORTATION
MATERIALS & RESEARCH SECTION
SUBSURFACE INFORMATION

BORING NUMBER: B-16
SHEET 1 of 1
DATE STARTED: 4/13/05
DATE COMPLETED: 4/13/05

PROJECT NAME: MORRISTOWN
SITE NAME: RT 15-A
STATION: 66+494.22
OFFSET: -14.76
VTSPG NAD83:

PROJECT NUMBER: BRS 0240(3)S
SITE NUMBER: ROADWAY
GROUND ELEVATION: 644.65 ft
GROUNDWATER DEPTH: 4.92 ft 4/14/05
PROJECT PIN NUMBER: 78F329

BORING CREW
CREW CHIEF: TALLMAN
DRILLER: TALLMAN
LOGGER: RUSSELL

BORING RIG: TRUCK
BORING TYPE: WASH BORE
SAMPLE TYPE: SPLIT BARREL
CHECKED BY: DLG

DEPTH (ft)	SYMBOL	CLASSIFICATION OF MATERIALS (Description)	N VALUE / RUN	M.C. (%) / REC (%)	GRAVEL (%) / RQD (%)	SAND (%) / Dip (deg)	FINES (%) / Drill Rate (min/ft)
		A-4, SiSa, gry, Moist, Rec. = 1.64 ft	25	40.1	5.3	48.0	46.7
2.5							
		A-4, SiSa, gry-brn, Moist, Rec. = 1.31 ft	5	35.3	0.1	50.7	49.2
5.0							
		A-4, SiSa, gry, Moist, Rec. = 1.97 ft	3	38.3	0.9	49.9	49.2
7.5							
		Top of Bedrock @ 9.02 ft					
10.0		9.02 ft - 13.94 ft, Gray, Quartz-mica Schist, Moderately hard, Unweathered, NXMDC, Competent	1	100	80	55	7 7 7 6 6
12.5							
15.0		13.94 ft - 18.86 ft, Gray, Quartz-mica Schist, Moderately hard, Unweathered, NXMDC, Competent	2	100	98	55	7 7 8 9 8
17.5							
20.0		Hole stopped @ 18.86 ft					
22.5							

LOG OF BORING MORRISTOWN BRS0240(3)ENGLISH.GPJ VT AOT.GDT 4/28/14

STATE OF VERMONT
AGENCY OF TRANSPORTATION
MATERIALS & RESEARCH SECTION
SUBSURFACE INFORMATION

BORING NUMBER: B-17
SHEET 1 of 1
DATE STARTED: 4/14/05
DATE COMPLETED: 4/15/05

PROJECT NAME: MORRISTOWN
SITE NAME: RT 15-A
STATION: 66+500.78
OFFSET: 0.00
VTSPG NAD83:

PROJECT NUMBER: BRS 0240(3)S
SITE NUMBER: ROADWAY
GROUND ELEVATION: 644.79 ft
GROUNDWATER DEPTH: 4.59 ft 4/15/05
PROJECT PIN NUMBER: 78F329

BORING CREW
CREW CHIEF: TALLMAN
DRILLER: TALLMAN
LOGGER: RUSSELL

BORING RIG: TRUCK
BORING TYPE: WASH BORE
SAMPLE TYPE: SPLIT BARREL
CHECKED BY: DLG

DEPTH (ft)	SYMBOL	CLASSIFICATION OF MATERIALS (Description)	N VALUE / RUN	M.C. (%) / REC (%)	GRAVEL (%) / RQD (%)	SAND (%) / Dip (deg)	FINES (%) / Drill Rate (min/ft)
2.5							
		Boulder, 3.28 ft - 4.27 ft					
5.0		No sample, Into Boulder, 4.59 ft - 5.91 ft					
7.5							
10.0		No sample, Broke through, Then into another Boulder, 8.86 ft - 10.17 ft					
		Top of Bedrock @ 10.83 ft					
12.5		10.83 ft - 15.75 ft, Gray, Quartz-mica Schist, Moderately hard, Unweathered, NXMDC, Competent	1	97	87	45	9 8 7 8 8
15.0							
17.5		15.75 ft - 20.67 ft, Gray, Quartz-mica Schist, Moderately hard, Unweathered, NXMDC, Competent	2	100	96	45	7 6 7 7 7
20.0		Hole stopped @ 20.67 ft					
22.5							

LOG OF BORING MORRISTOWN BRS0240(3)ENGLISH.GPJ VT AOT.GDT 4/28/14

STATE OF VERMONT
AGENCY OF TRANSPORTATION
MATERIALS & RESEARCH SECTION
SUBSURFACE INFORMATION

BORING NUMBER: B-19
SHEET 1 of 1
DATE STARTED: 5/04/05
DATE COMPLETED: 5/06/05

PROJECT NAME: MORRISTOWN
SITE NAME: RT 15-A
STATION: 66+663.18
OFFSET: -13.12
VTSPG NAD83:

PROJECT NUMBER: BRS 0240(3)S
SITE NUMBER: ROADWAY
GROUND ELEVATION: 644.97 ft
GROUNDWATER DEPTH: 6.56 ft 5/06/05
PROJECT PIN NUMBER: 78F329

BORING CREW
CREW CHIEF: TALLMAN
DRILLER: TALLMAN
LOGGER: RUSSELL

BORING RIG: TRUCK
BORING TYPE: WASH BORE
SAMPLE TYPE: SPLIT BARREL
CHECKED BY: DLG

DEPTH (ft)	SYMBOL	CLASSIFICATION OF MATERIALS (Description)	N VALUE / RUN	M.C. (%) / REC (%)	GRAVEL (%) / RQD (%)	SAND (%) / Dip (deg)	FINES (%) / Drill Rate (min/ft)
5		A-2-4, SiSa, gry-brn, Moist, Rec. = 1.31 ft	3	32.0	0.2	69.5	30.3
10		A-2-4, Sa, gry, Moist, Rec. = 0.66 ft	12	24.3	4.8	80.5	14.7
15		A-3, Sa, gry, Moist, Rec. = 0.66 ft A-4, Si, gry, Moist, Rec. = 1.15 ft, Sample was tested for Limits (NP)	3	23.9 28.6	0.2 0.0	95.9 9.8	3.9 90.2
20		A-4, SaSi, gry, Moist, Rec. = 1.31 ft	5	29.6	0.0	22.9	77.1
25		A-1-b, Sa, brn, Moist, Rec. = 0.89 ft	8	19.6	3.1	91.4	5.5
30		A-1-b, GrSa, brn, Moist, Rec. = 0.82 ft	7	17.4	31.2	64.0	4.8
		Top of Bedrock @ 34.12 ft					
35		34.12 ft - 39.04 ft, Greenish gray, Micaceous Schist-greenstone, Moderately hard, Unweathered, NXMDC, with quartz veins, Competent	1	92	73	60	11 9 9 10 9
40		39.04 ft - 43.96 ft, Greenish gray, Micaceous Schist-greenstone, Moderately hard, Unweathered, NXMDC, with quartz veins, Fair competency	2	80	40	60	7 8 7 9 9
		Hole stopped @ 43.96 ft					

LOG OF BORING MORRISTOWN BRS0240(3)ENGLISH.GPJ VT AOT.GDT 4/28/14

PROJECT NAME: MORRISTOWN
PROJECT NUMBER: BRS 0240(3)S

FILE NAME: 78f329\STR\s78f329borlog.dgn PLOT DATE: 16-NOV-2015
PROJECT LEADER: C. CARLSON DRAWN BY: M&R
DESIGNED BY: M&R CHECKED BY: M&R
BORING LOGS #2 SHEET 61 OF 148

STATE OF VERMONT
AGENCY OF TRANSPORTATION
MATERIALS & RESEARCH SECTION
SUBSURFACE INFORMATION

BORING NUMBER: B-20
SHEET 1 of 1
DATE STARTED: 4/21/05
DATE COMPLETED: 5/13/05

PROJECT NAME: MORRISTOWN
SITE NAME: RT 15-A
STATION: 66+666.47
OFFSET: 27.89
VTSPG NAD83:

PROJECT NUMBER: BRS 0240(3)S
SITE NUMBER: ROADWAY
GROUND ELEVATION: 653.56 ft
GROUNDWATER DEPTH: 13.94 ft 5/13/05
PROJECT PIN NUMBER: 78F329

BORING CREW
CREW CHIEF: TALLMAN
DRILLER: TALLMAN
LOGGER: RUSSELL

BORING RIG: TRUCK
BORING TYPE: WASH BORE
SAMPLE TYPE: SPLIT BARREL
CHECKED BY: DLG

DEPTH (ft)	SYMBOL	CLASSIFICATION OF MATERIALS (Description)	N VALUE / RUN	M.C. (%) / REC (%)	GRAVEL (%) / RQD (%)	SAND (%) / Dip (deg)	FINES (%) / Drill Rate (min/ft)
		A-2-4, Sa, brn, Moist, Rec. = 0.33 ft	19	21.1	13.4	72.0	14.6
10		A-2-4, SiSa, brn, Moist, Rec. = 0.66 ft	6	16.2	9.2	56.5	34.3
		A-4, SiSa, gry-brn, Moist, Rec. = 0.98 ft	7	28.4	0.0	62.6	37.4
20		NXDC, Cleaned out casing, 19.03 ft - 19.69 ft A-2-4, GrSa, gry-brn, Moist, Rec. = 0.49 ft	16	17.5	20.4	60.6	19.0
		A-2-4, SiSa, gry, Moist, Rec. = 0.82 ft	11	22.6	0.0	78.9	21.1
30		A-1-b, GrSa, gry, Moist, Rec. = 1.31 ft	11	16.0	25.0	70.7	4.3
		A-1-b, Sa, gry, Moist, Rec. = 0.98 ft	24	19.0	3.3	91.5	5.2
40		A-4, SiSa, gry, Moist, Rec. = 0.98 ft	16	31.1	0.0	64.3	35.7
		A-2-4, Sa, gry, Moist, Rec. = 1.64 ft	20	31.4	0.0	89.2	10.8
		Top of Bedrock @ 47.9 ft					
50		47.9 ft - 50.36 ft, Greenish gray, Micaceous Schist-greenstone, Moderately hard, Moderately weathered, NXMDC, Poor competency	1	93	0	55	10 9
		50.36 ft - 55.28 ft, Greenish gray, Micaceous Schist-greenstone, Moderately hard, Unweathered, NXMDC, with quartz veins, Competent	2	100	53	55	11 10 7 9 10
		55.28 ft - 57.74 ft, Greenish gray, Micaceous Schist-greenstone, Moderately hard, Unweathered, NXMDC, with quartz veins, Competent	3	100	93	55	12 10 6
		Hole stopped @ 57.74 ft					

LOG OF BORING MORRISTOWN BRS0240(3)ENGLISH.GPJ VT AOT.GDT 4/28/14

STATE OF VERMONT
AGENCY OF TRANSPORTATION
MATERIALS & RESEARCH SECTION
SUBSURFACE INFORMATION

BORING NUMBER: B-21
SHEET 1 of 1
DATE STARTED: 4/29/05
DATE COMPLETED: 5/04/05

PROJECT NAME: MORRISTOWN
SITE NAME: RT 15-A
STATION: 66+682.87
OFFSET: -32.80
VTSPG NAD83:

PROJECT NUMBER: BRS 0240(3)S
SITE NUMBER: ROADWAY
GROUND ELEVATION: 645.85 ft
GROUNDWATER DEPTH: 6.56 ft 5/04/05
PROJECT PIN NUMBER: 78F329

BORING CREW
CREW CHIEF: TALLMAN
DRILLER: TALLMAN
LOGGER: RUSSELL

BORING RIG: TRUCK
BORING TYPE: WASH BORE
SAMPLE TYPE: SPLIT BARREL
CHECKED BY: DLG

DEPTH (ft)	SYMBOL	CLASSIFICATION OF MATERIALS (Description)	N VALUE / RUN	M.C. (%) / REC (%)	GRAVEL (%) / RQD (%)	SAND (%) / Dip (deg)	FINES (%) / Drill Rate (min/ft)
		Boulder, 3.44 ft - 4.43 ft					
5		A-4, SaSi, gry, Moist, Rec. = 1.48 ft	12	23.3	1.1	40.5	58.4
10		A-2-4, SiSa, gry, Moist, Rec. = 0.66 ft	8	23.9	1.3	70.2	28.5
15		A-4, SaSi, gry, Moist, Rec. = 1.64 ft	5	30.1	0.0	25.7	74.3
20		A-1-b, Sa, gry-brn, Moist, Rec. = 1.31 ft	6	19.8	5.7	88.7	5.6
25		A-1-b, Sa, gry-brn, Moist, Rec. = 1.31 ft	10	24.0	0.3	95.2	4.5
		Started using drillers mud, 26.9 ft					
30		A-3, Sa, gry, Moist, Rec. = 0.82 ft	9	25.6	0.2	95.2	4.6
35		A-3, Sa, gry, Moist, Rec. = 1.64 ft	16	29.4	0.0	95.0	5.0
		Top of Bedrock @ 38.06 ft					
40		38.06 ft - 39.04 ft, Greenish gray, Micaceous Schist-greenstone, Moderately hard, Unweathered, NXMDC, with quartz veins, Poor competency	1	100	0	50	10
		39.04 ft - 43.96 ft, Greenish gray, Micaceous Schist-greenstone, Moderately hard, Unweathered, NXMDC, with quartz veins, Competent	2	100	92	50	13 13 11 10 11
45		43.96 ft - 47.9 ft, Greenish gray, Micaceous Schist-greenstone, Moderately hard, Unweathered, NXMDC, with quartz veins, Competent	3	100	72	50	9 9 11 11
		Hole stopped @ 47.9 ft					

LOG OF BORING MORRISTOWN BRS0240(3)ENGLISH.GPJ VT AOT.GDT 4/28/14

PROJECT NAME: MORRISTOWN
PROJECT NUMBER: BRS 0240(3)S

FILE NAME: 78f329\STR\s78f329borlog.dgn
PROJECT LEADER: C. CARLSON
DESIGNED BY: M&R
BORING LOGS #3

PLOT DATE: 16-NOV-2015
DRAWN BY: M&R
CHECKED BY: M&R
SHEET 62 OF 148

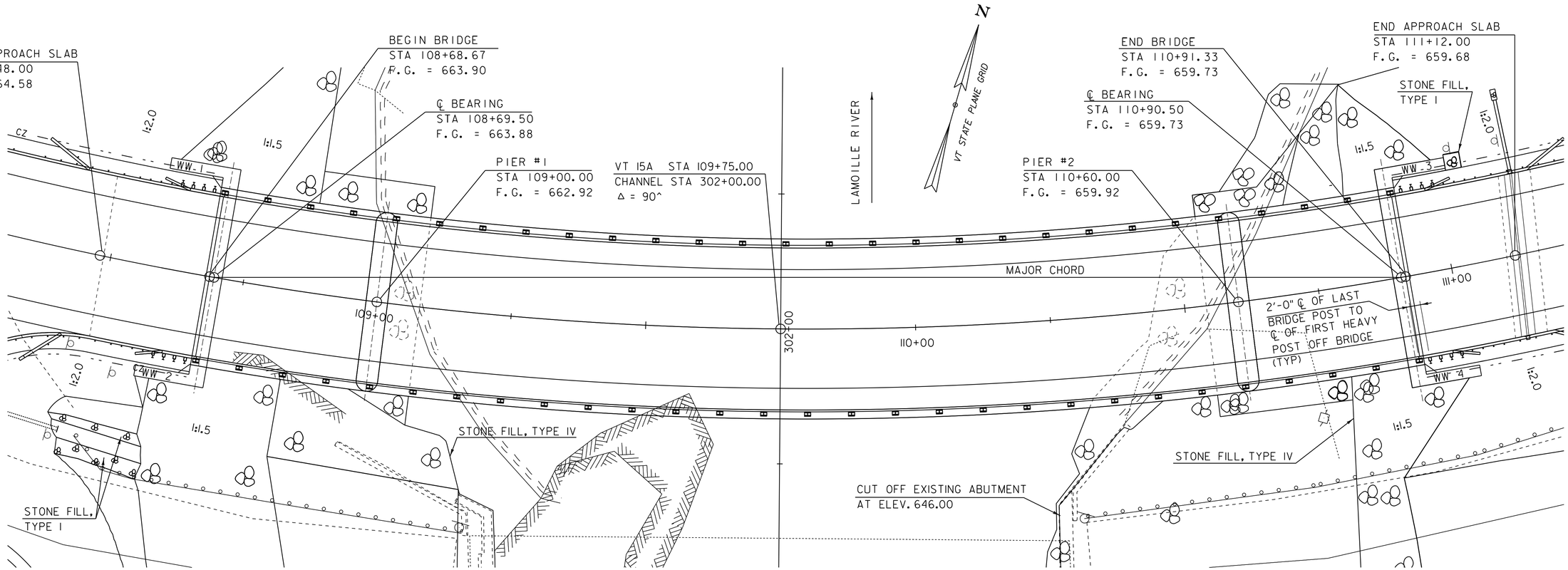

PLAN

SCALE 1" = 10'-0"
10 0 10

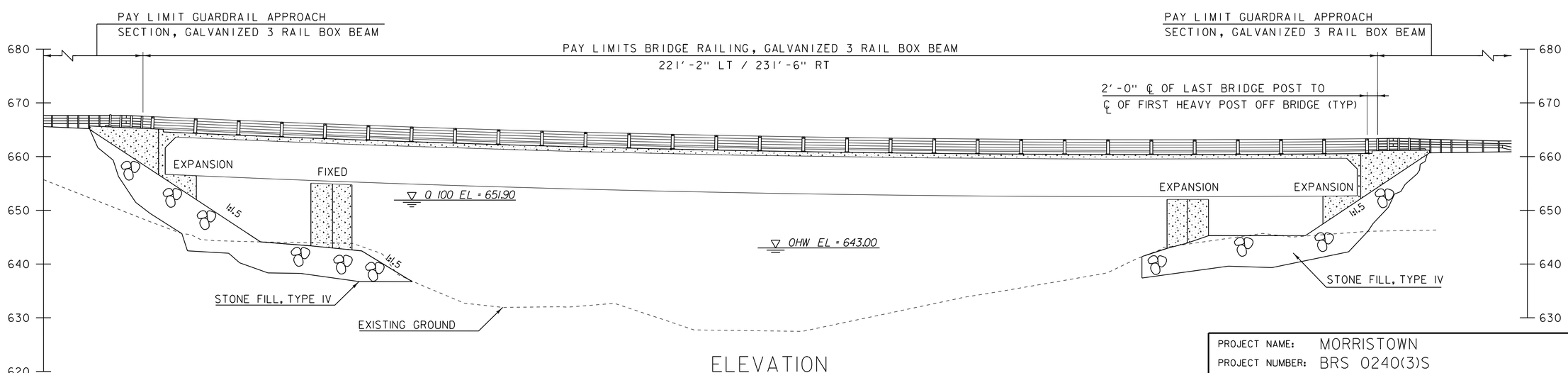

ELEVATION

SCALE 1" = 10'-0"
10 0 10

PROJECT NAME: MORRISTOWN	
PROJECT NUMBER: BRS 0240(3)S	
FILE NAME: 78f329\STRNf329pe.dgn	PLOT DATE: 16-NOV-2015
PROJECT LEADER: C. CARLSON	DRAWN BY: G.ROKES
DESIGNED BY: G.GRIFFIN	CHECKED BY: J.LACRIOX
PLAN AND ELEVATION	SHEET 63 OF 148

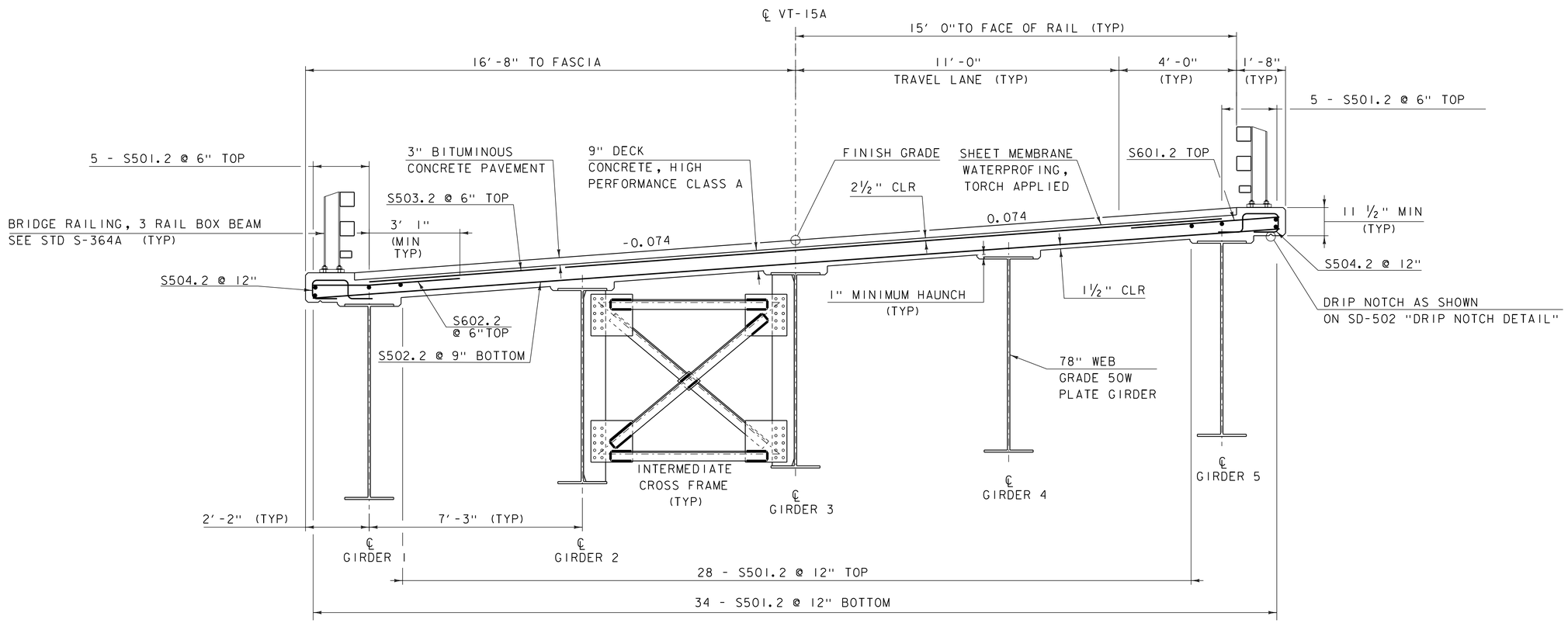

BRIDGE TYPICAL SECTION

SCALE ½" = 1'-0"

PROJECT NAME: MORRISTOWN	
PROJECT NUMBER: BRS 0240(3)S	
FILE NAME: 78f329/STR/s78f329sup.dgn	PLOT DATE: 16-NOV-2015
PROJECT LEADER: C. CARLSON	DRAWN BY: G. ROKES
DESIGNED BY: J. GRIFFIN	CHECKED BY: D. PETERSON
BRIDGE TYPICAL	SHEET 64 OF 148

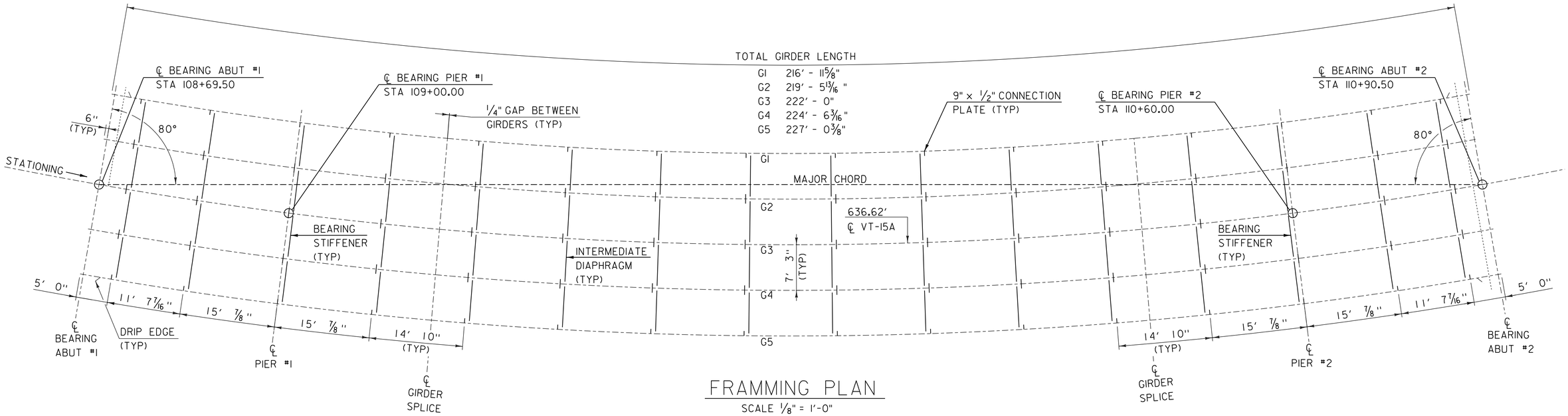

FRAMMING PLAN

SCALE 1/8" = 1'-0"

NOTE: ALL CONNECTION PLATES AND BEARING STIFFENERS ARE PLACED RADIAL.

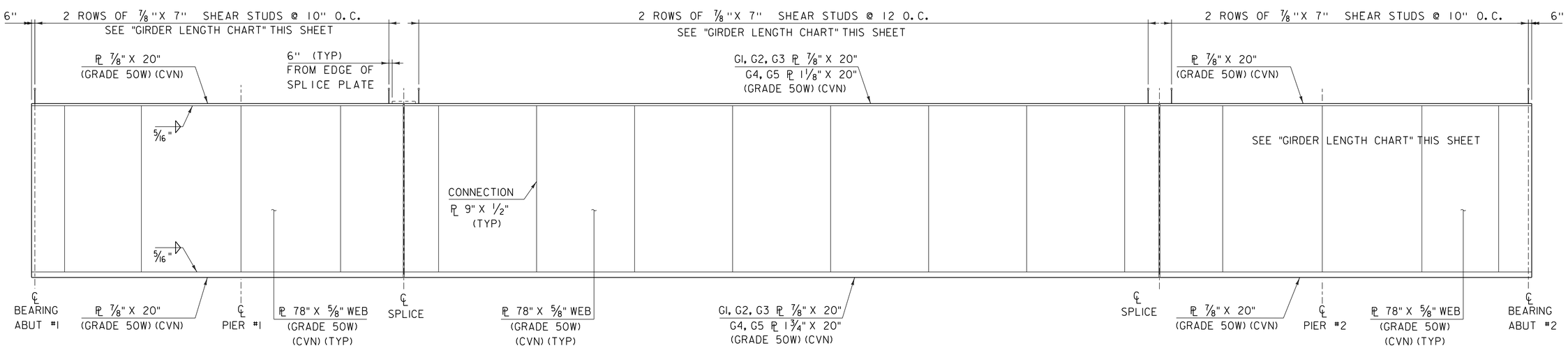

GIRDER ELEVATION

HORIZONTAL SCALE 1/8" = 1'-0"
VERTICAL SCALE 1/2" = 1'-0"

GIRDER LENGTH CHART

	END GIRDERS LENGTH	MIDDLE GIRDER LENGTH	END GIRDERS STUDS	MIDDLE GIRDER STUDS
G1	54' - 10 1/8"	109' - 2 7/8"	2 ROWS / 64 EA.	2 ROWS / 108 EA.
G2	54' - 9 9/16"	110' - 6 3/16"	2 ROWS / 65 EA.	2 ROWS / 109 EA.
G3	55' - 1"	111' - 9 7/16"	2 ROWS / 66 EA.	2 ROWS / 110 EA.
G4	55' - 8 1/2"	113' - 0 3/4"	2 ROWS / 67 EA.	2 ROWS / 111 EA.
G5	56' - 3 15/16"	114' - 4"	2 ROWS / 68 EA.	2 ROWS / 112 EA.

(CVN) DENOTES CHARPY V-NOTCH TESTING IS REQUIRED

PROJECT NAME: MORRISTOWN
PROJECT NUMBER: BRS 0240(3)S

FILE NAME: 78f329/STR/s78f329sup.dgn
PROJECT LEADER: C. CARLSON
DESIGNED BY: J. GRIFFIN
FRAMING PLAN AND GIRDER ELEVATION

PLOT DATE: 16-NOV-2015
DRAWN BY: G. ROKES
CHECKED BY: D. PETERSON
SHEET 65 OF 148

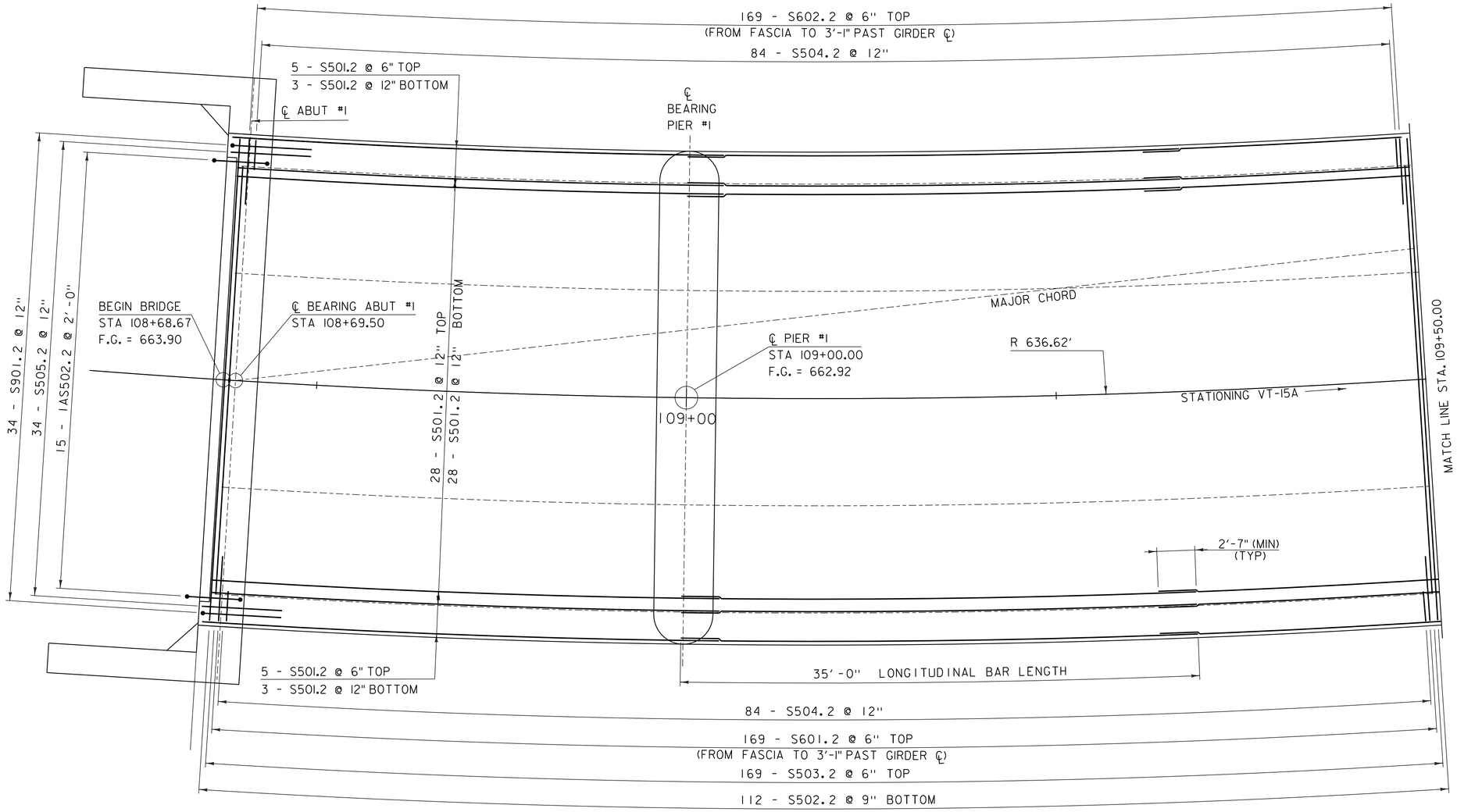

DECK REINFORCING PLAN #1

SCALE 1/4" = 1'-0"

NOTE:

NF = NEAR FACE
FF = FAR FACE
EF = EACH FACE
▲ = CUT TO FIT IN FIELD
3" CLEAR, UNLESS OTHERWISE SPECIFIED ON THE PLANS.
2'-2" BAR LAP UNLESS OTHERWISE SPECIFIED ON THE PLANS.

PROJECT NAME: MORRISTOWN	
PROJECT NUMBER: BRS 0240(3)S	
FILE NAME: 78f329/STR/s78f329sup.dgn	PLOT DATE: 16-NOV-2015
PROJECT LEADER: C. CARLSON	DRAWN BY: G. ROKES
DESIGNED BY: J. GRIFFIN	CHECKED BY: D. PETERSON
DECK REINFORCING PLAN #1	SHEET 66 OF 148

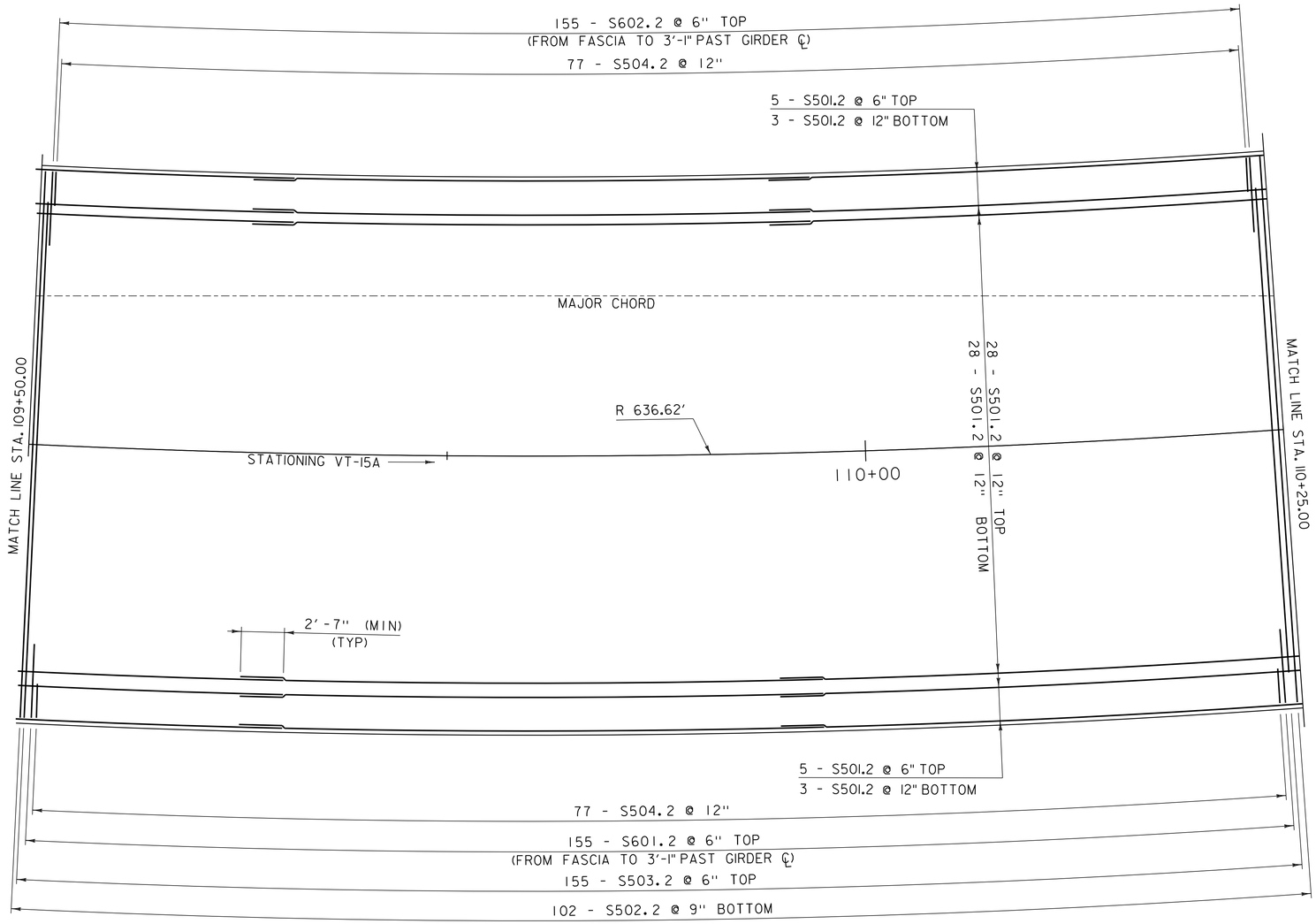

DECK REINFORCING PLAN #2

SCALE 1/4" = 1'-0"

NOTE:

NF = NEAR FACE
FF = FAR FACE
EF = EACH FACE
▲ = CUT TO FIT IN FIELD
3" CLEAR, UNLESS OTHERWISE SPECIFIED ON THE PLANS.
2'-2" BAR LAP UNLESS OTHERWISE SPECIFIED ON THE PLANS.

PROJECT NAME: MORRISTOWN	
PROJECT NUMBER: BRS 0240(3)S	
FILE NAME: 78f329/STR/s78f329sup.dgn	PLOT DATE: 16-NOV-2015
PROJECT LEADER: C. CARLSON	DRAWN BY: G. ROKES
DESIGNED BY: J. GRIFFIN	CHECKED BY: D. PETERSON
DECK REINFORCING PLAN #2	SHEET 67 OF 148

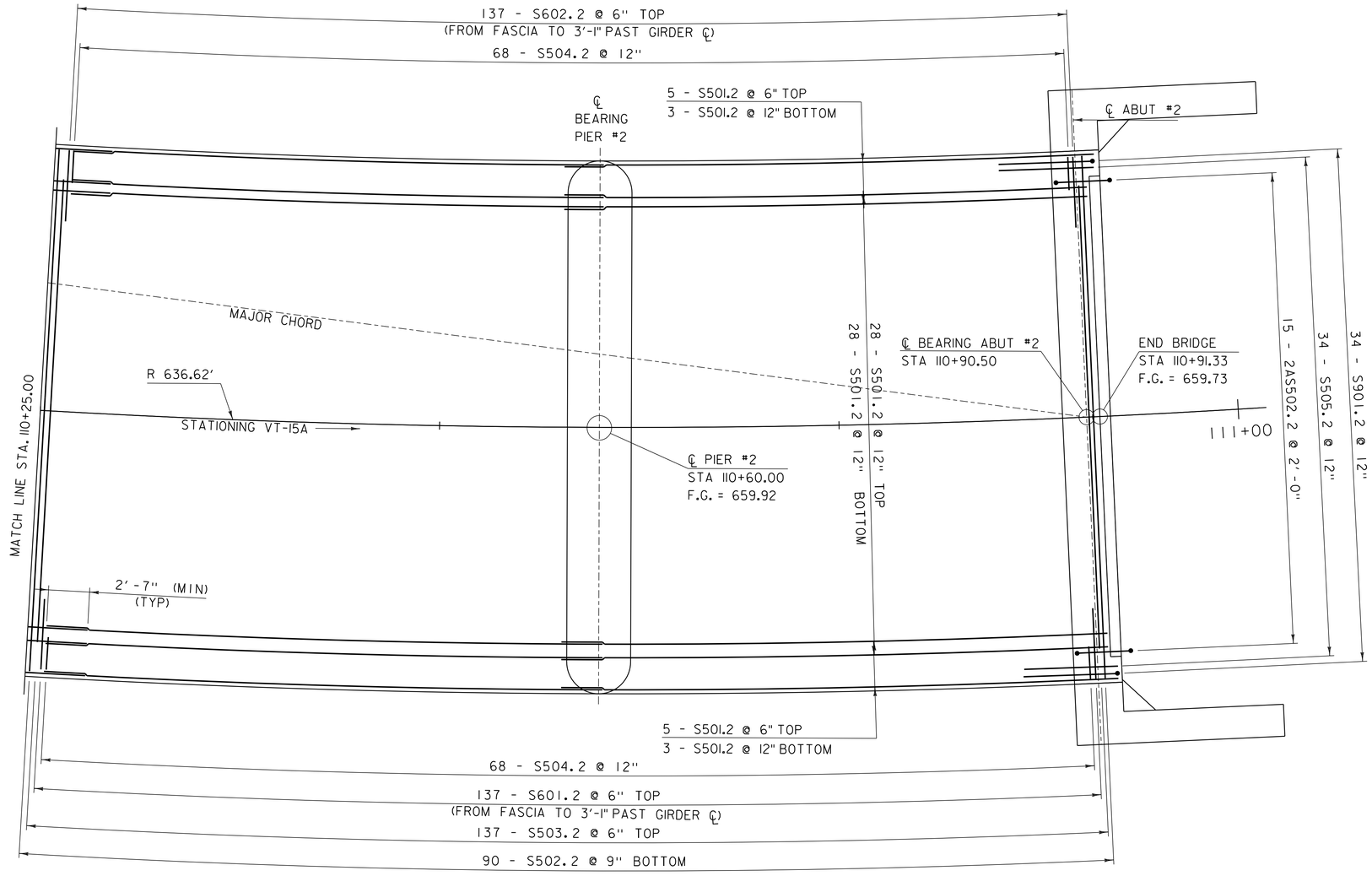

DECK REINFORCING PLAN #3

SCALE 1/4" = 1'-0"

NOTE:

NF = NEAR FACE
FF = FAR FACE
EF = EACH FACE
▲ = CUT TO FIT IN FIELD
3" CLEAR, UNLESS OTHERWISE SPECIFIED ON THE PLANS.
2'-2" BAR LAP UNLESS OTHERWISE SPECIFIED ON THE PLANS.

PROJECT NAME: MORRISTOWN	
PROJECT NUMBER: BRS 0240(3)S	
FILE NAME: 78f329/STR/s78f329sup.dgn	PLOT DATE: 16-NOV-2015
PROJECT LEADER: C. CARLSON	DRAWN BY: G. ROKES
DESIGNED BY: J. GRIFFIN	CHECKED BY: D. PETERSON
DECK REINFORCING PLAN #3	SHEET 68 OF 148

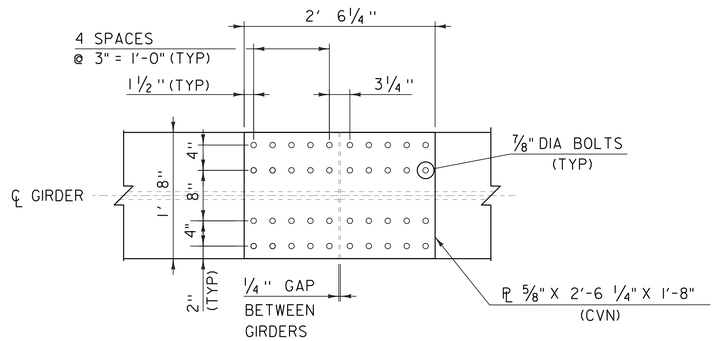

TOP/BOTTOM OUTSIDE FLANGE SPLICE PLATE (GIRDERS 1,2,3)

SCALE 1" = 1'-0"

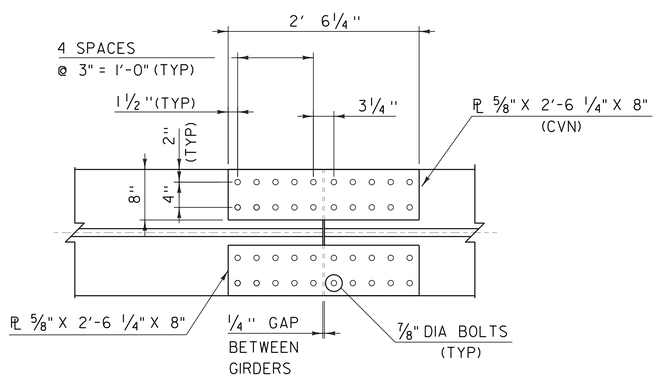

TOP/BOTTOM INSIDE FLANGE SPLICE PLATE (GIRDERS 1,2,3)

SCALE 1" = 1'-0"

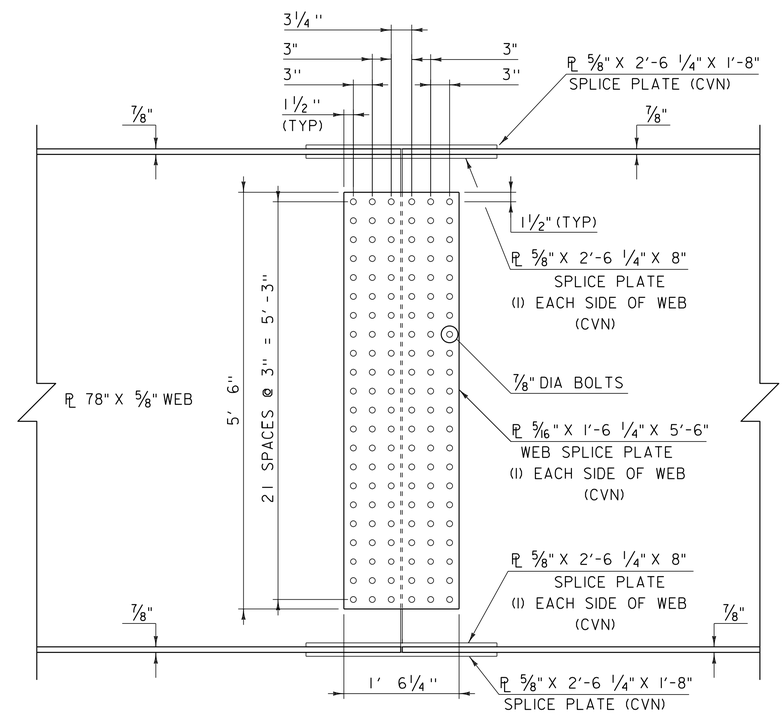

SPLICE ELEVATION GIRDERS 1,2,3

SCALE 1" = 1'-0"

PROJECT NAME: MORRISTOWN	
PROJECT NUMBER: BRS 0240(3)S	
FILE NAME: 78f329/STR/s78f329sup.dgn	PLOT DATE: 16-NOV-2015
PROJECT LEADER: C. CARLSON	DRAWN BY: G. ROKES
DESIGNED BY: F. BARROWS	CHECKED BY: D. PETERSON
GIRDER SPLICE PLATE DETAIL #1	SHEET 69 OF 148

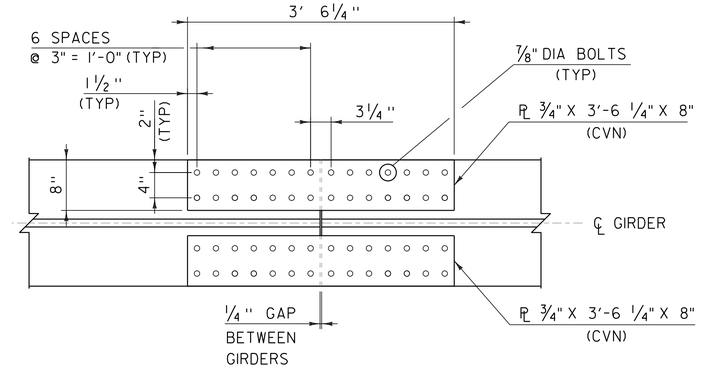

TOP INSIDE FLANGE SPLICE PLATE

(GIRDERS 4,5)

SCALE 1" = 1'-0"

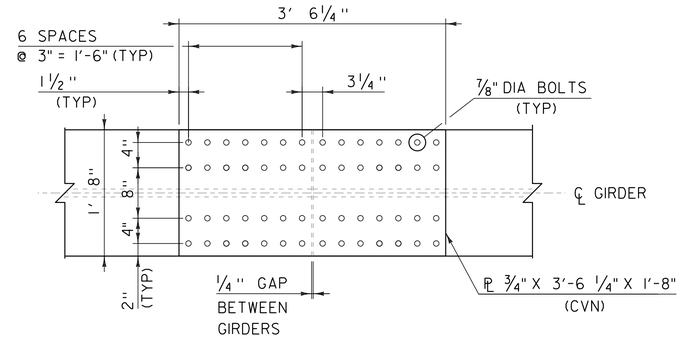

TOP OUTSIDE FLANGE SPLICE PLATE

(GIRDERS 4,5)

SCALE 1" = 1'-0"

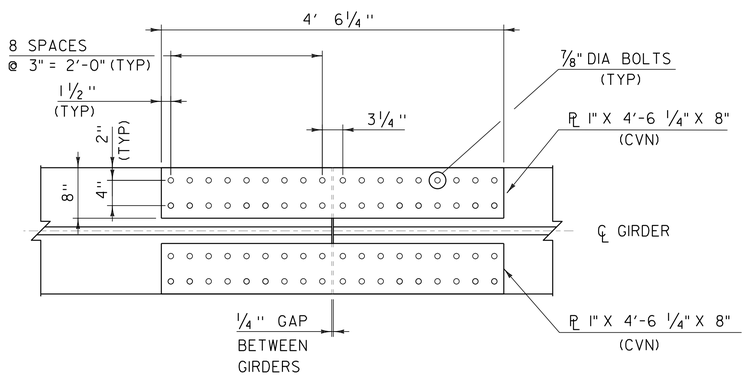

BOTTOM INSIDE FLANGE SPLICE PLATE

(GIRDERS 4,5)

SCALE 1" = 1'-0"

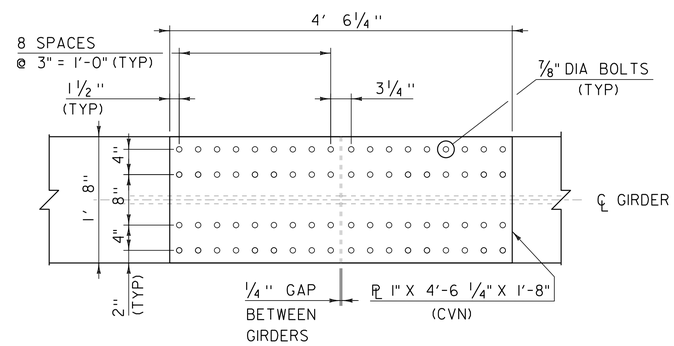

BOTTOM OUTSIDE FLANGE SPLICE PLATE

(GIRDERS 4,5)

SCALE 1" = 1'-0"

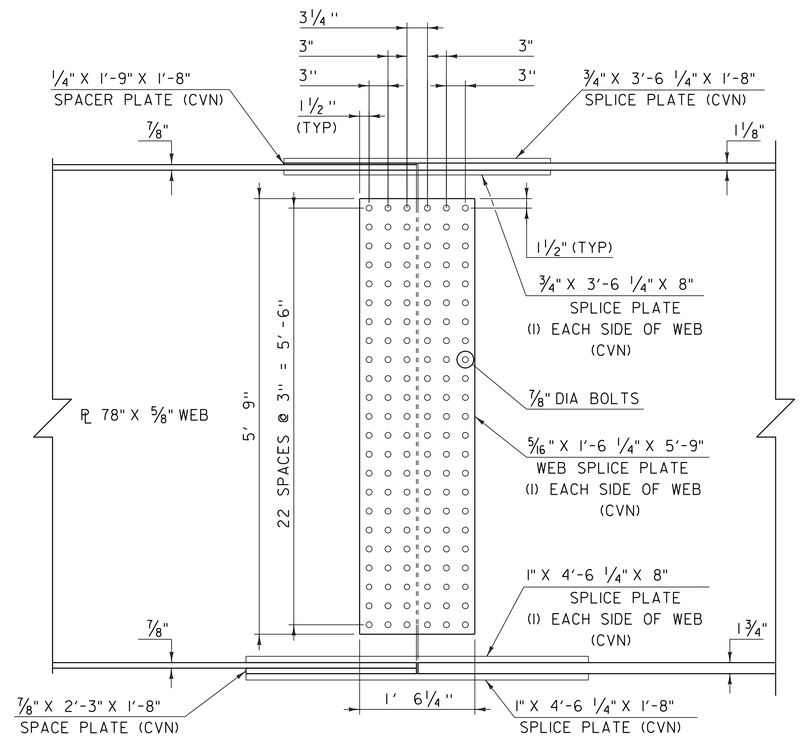

SPLICE ELEVATION

GIRDERS 4,5

SCALE 1" = 1'-0"

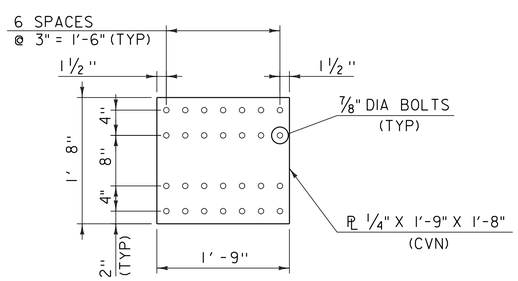

SPACER PLATE TOP FLANGE

(GIRDERS 4,5)

SCALE 1" = 1'-0"

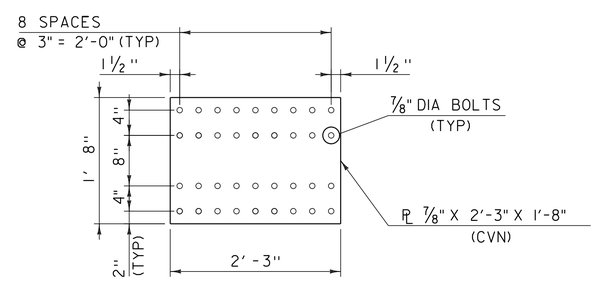

SPACER PLATE BOTTOM FLANGE

(GIRDERS 4,5)

SCALE 1" = 1'-0"

PROJECT NAME: MORRISTOWN	
PROJECT NUMBER: BRS 0240(3)S	
FILE NAME: 78f329/STR/s78f329sup.dgn	PLOT DATE: 16-NOV-2015
PROJECT LEADER: C. CARLSON	DRAWN BY: G. ROKES
DESIGNED BY: F. BARROWS	CHECKED BY: D. PETERSON
GIRDER SPLICE PLATE DETAIL #2	SHEET 70 OF 148

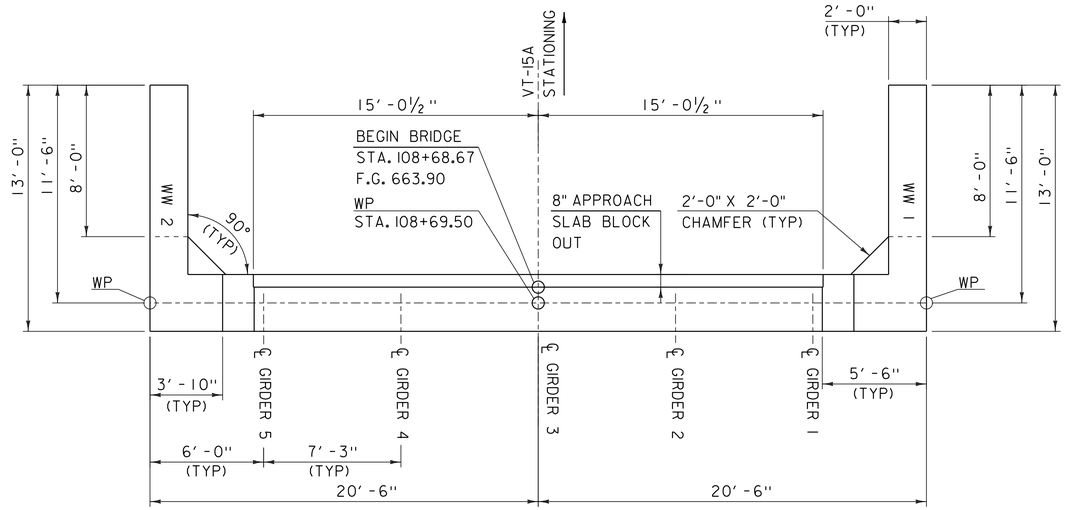

ABUTMENT #1 PLAN

SCALE ¼" = 1'-0"

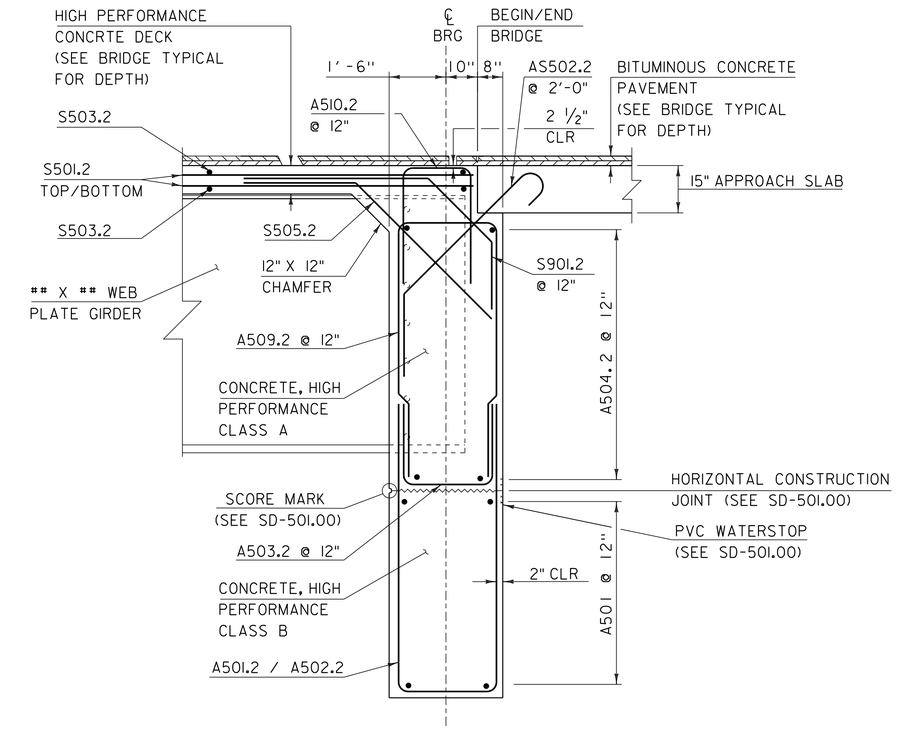

ABUTMENT TYPICAL

SCALE ½" = 1'-0"

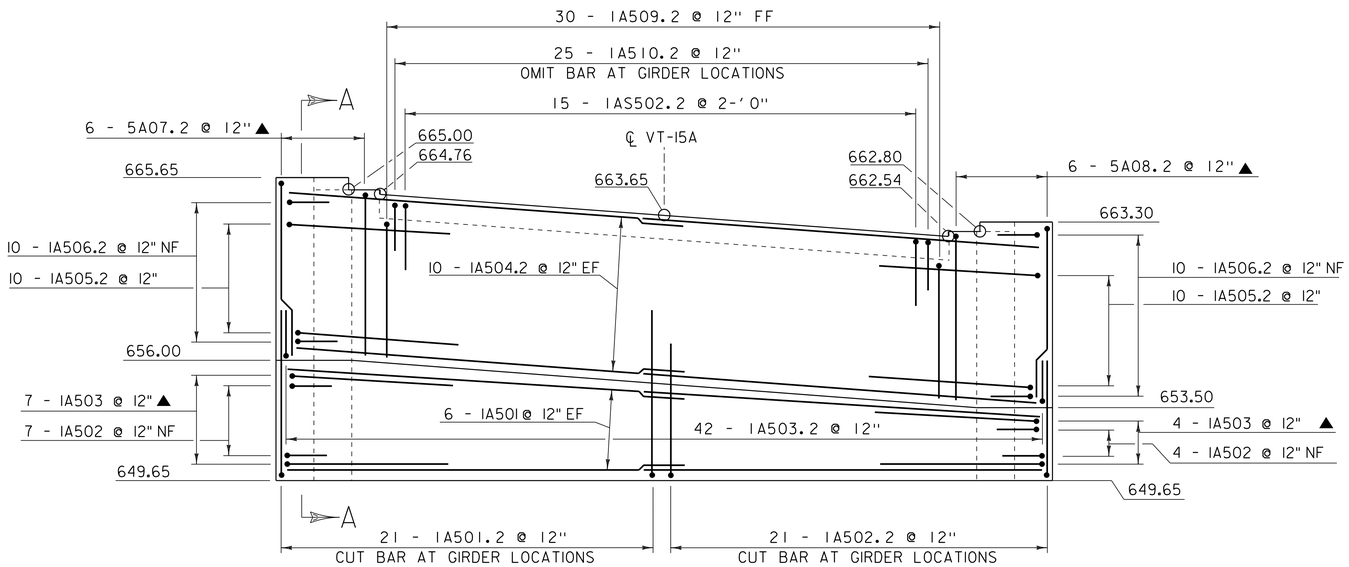

ABUTMENT #1 ELEVATION

SCALE ¼" = 1'-0"

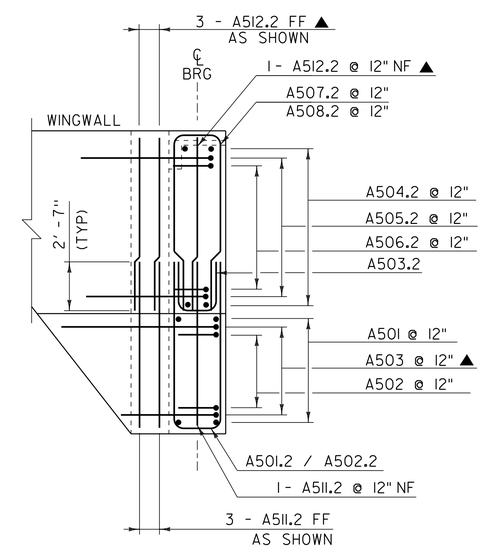

A - A

TYPICAL SECTION

SCALE ¼" = 1'-0"

NOTE:

NF = NEAR FACE
FF = FAR FACE
EF = EACH FACE
▲ = CUT TO FIT IN FIELD
3" CLEAR, UNLESS OTHERWISE SPECIFIED ON THE PLANS.
2'-2" BAR LAP UNLESS OTHERWISE SPECIFIED ON THE PLANS.

PROJECT NAME: MORRISTOWN	
PROJECT NUMBER: BRS 0240(3)S	
FILE NAME: 78f329/STR/78f329sub.dgn	PLOT DATE: 16-NOV-2015
PROJECT LEADER: C. CARLSON	DRAWN BY: G. ROKES
DESIGNED BY: J. GRIFFIN	CHECKED BY: D. PETERSON
ABUTMENT #1 PLAN AND ELEVATION	SHEET 71 OF 148

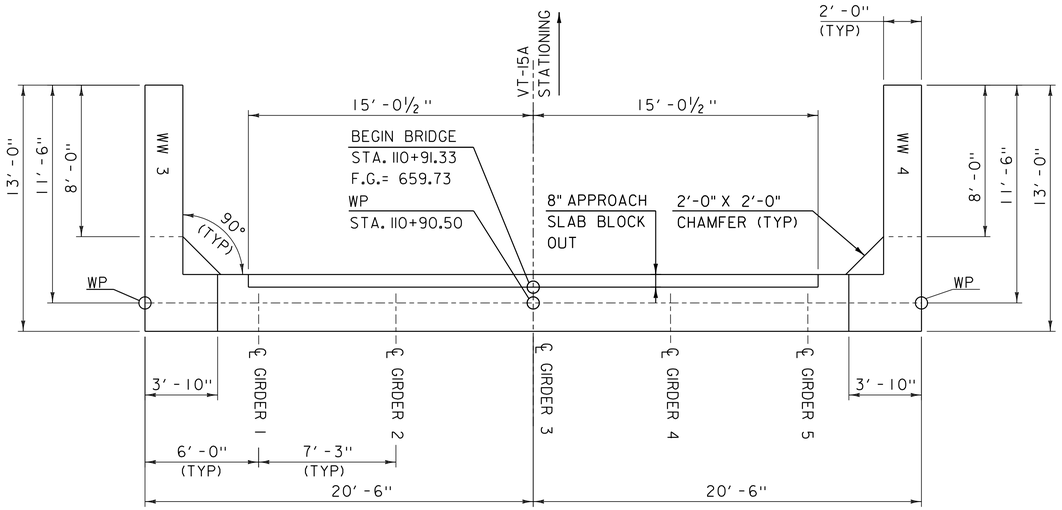

ABUTMENT #2 PLAN

SCALE 1/4" = 1'-0"

OMIT BAR AT GIRDER LOCATIONS

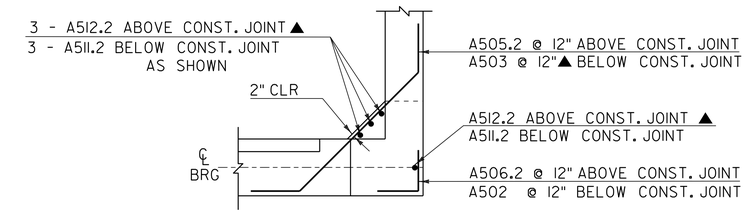

TYPICAL CORNER REBAR

SCALE 1/4" = 1'-0"

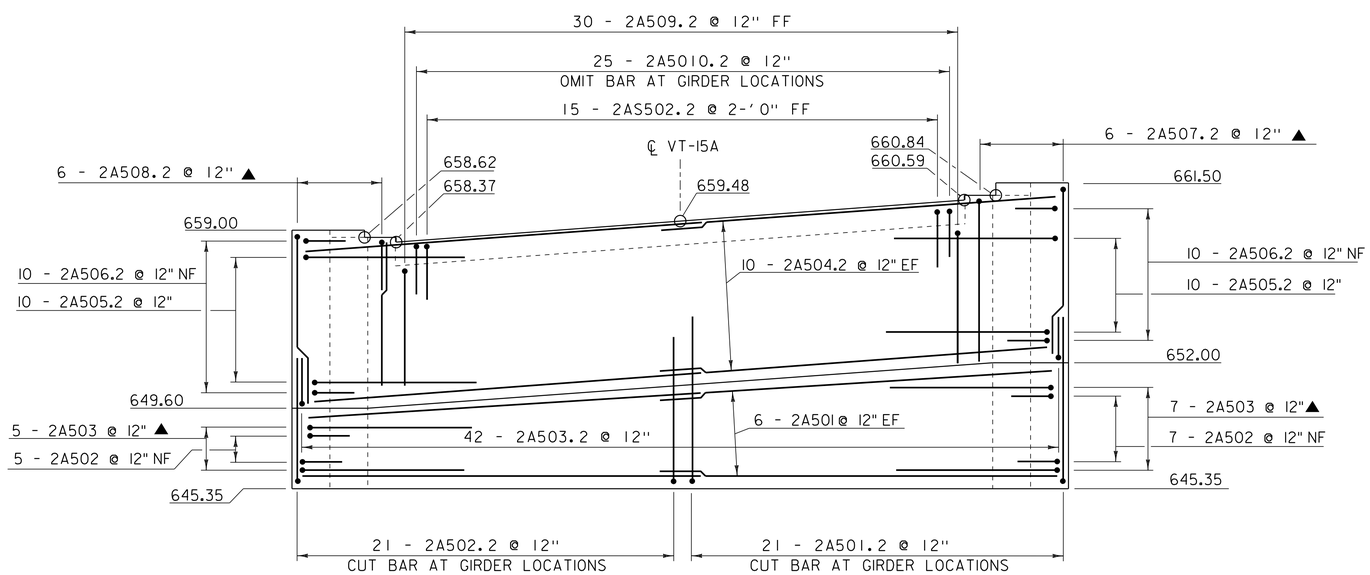

ABUTMENT #2 ELEVATION

SCALE 1/4" = 1'-0"

NOTE:

NF = NEAR FACE
FF = FAR FACE
EF = EACH FACE
▲ = CUT TO FIT IN FIELD
3" CLEAR, UNLESS OTHERWISE SPECIFIED ON THE PLANS.
2'-2" BAR LAP UNLESS OTHERWISE SPECIFIED ON THE PLANS.

PROJECT NAME: MORRISTOWN	
PROJECT NUMBER: BRS 0240(3)S	
FILE NAME: 78f329/STR/78f329sub.dgn	PLOT DATE: 16-NOV-2015
PROJECT LEADER: C. CARLSON	DRAWN BY: G. ROKES
DESIGNED BY: J. GRIFFIN	CHECKED BY: D. PETERSON
ABUTMENT #2 PLAN AND ELEVATION	SHEET 72 OF 148

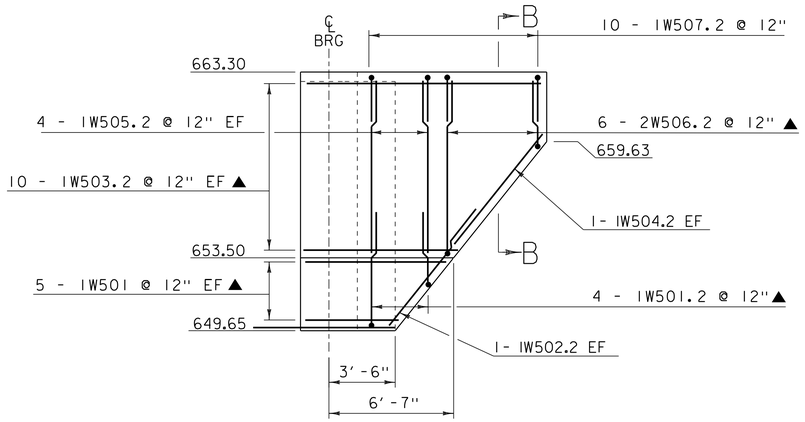

WINGWALL #1 ELEVATION

SCALE 1/4" = 1'-0"

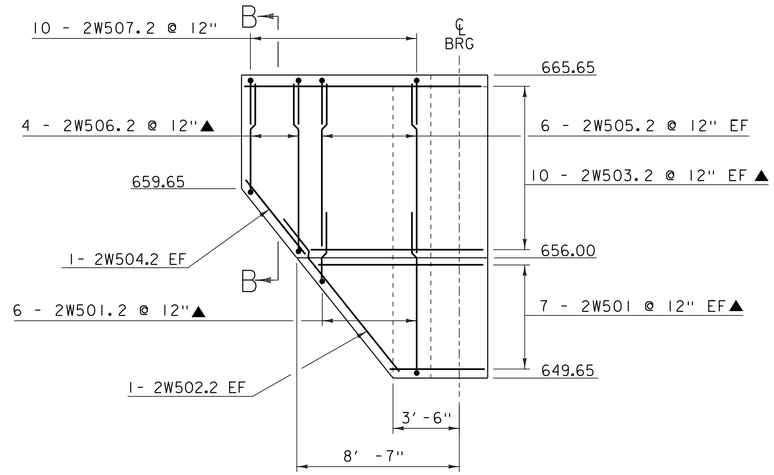

WINGWALL #2 ELEVATION

SCALE 1/4" = 1'-0"

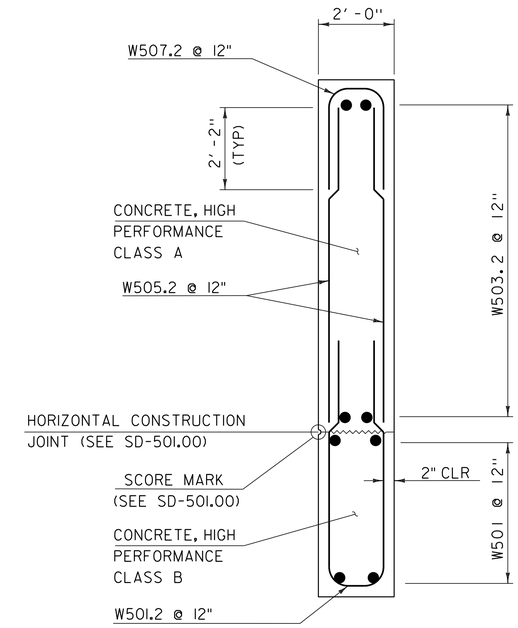

WINGWALL TYPICAL

SCALE 1/4" = 1'-0"

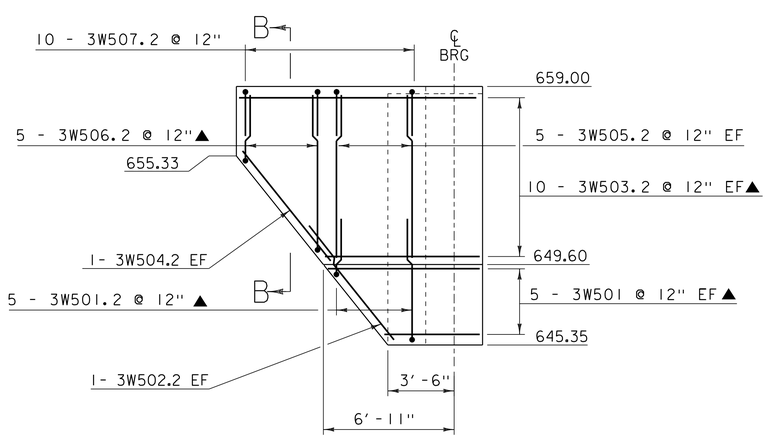

WINGWALL #3 ELEVATION

SCALE 1/4" = 1'-0"

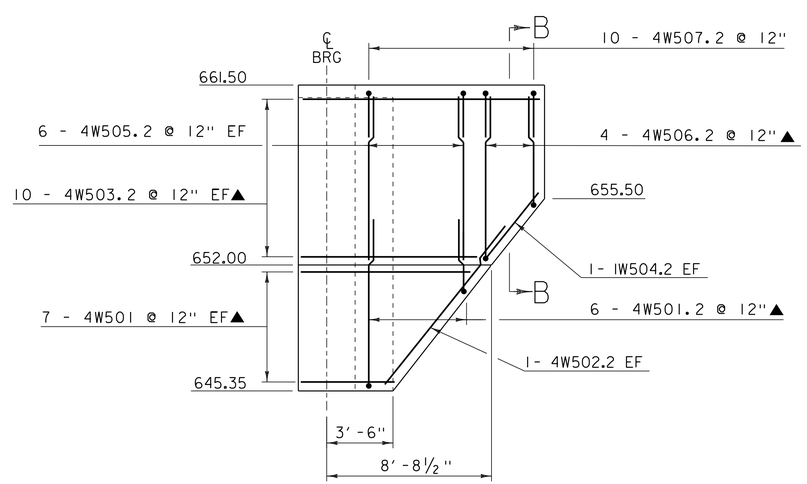

WINGWALL #4 ELEVATION

SCALE 1/4" = 1'-0"

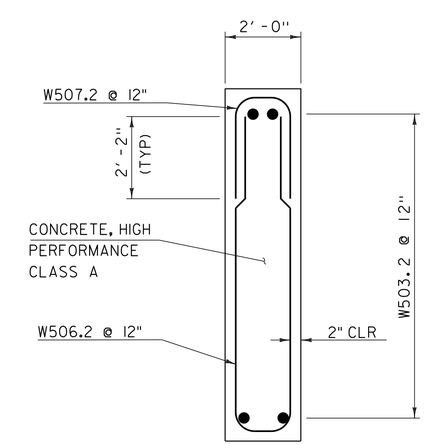

B-B SECTION TYPICAL

SCALE 1/4" = 1'-0"

NOTE:

NF = NEAR FACE
FF = FAR FACE
EF = EACH FACE
▲ = CUT TO FIT IN FIELD
3" CLEAR, UNLESS OTHERWISE SPECIFIED ON THE PLANS.
2'-2" BAR LAP UNLESS OTHERWISE SPECIFIED ON THE PLANS.

PROJECT NAME: MORRISTOWN	
PROJECT NUMBER: BRS 0240(3)S	
FILE NAME: 78f329/STR/78f329sub.dgn	PLOT DATE: 16-NOV-2015
PROJECT LEADER: C. CARLSON	DRAWN BY: G. ROKES
DESIGNED BY: J. GRIFFIN	CHECKED BY: D. PETERSON
WINGWALL ELEVATION AND TYPICAL	SHEET 73 OF 148

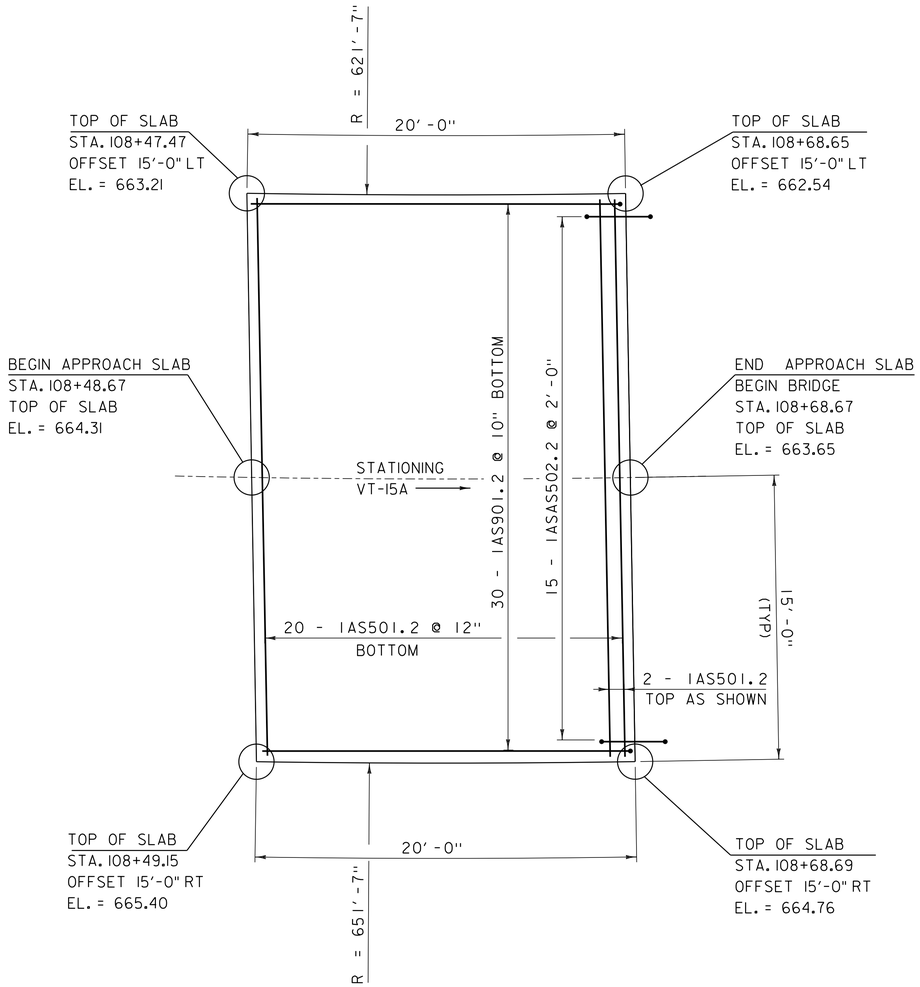

APPROACH SLAB NO. 1 PLAN

SCALE 1/4" = 1'-0"

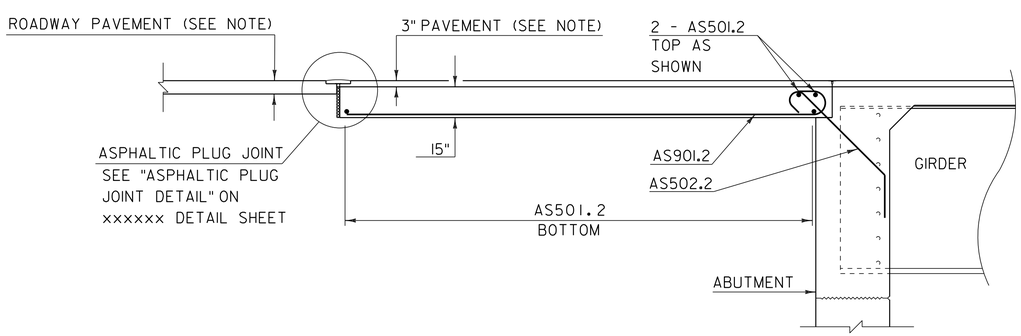

APPROACH SLAB #1 SECTION TYPICAL

NOT TO SCALE

NOTE: FOR THE DEPTH AND FULL PAY ITEM NAME OF "PAVEMENT" USE THE "ROADWAY TYPICAL" DETAIL ITEM NAME LOCATED ON THE TYPICAL SHEET.

PROJECT NAME: MORRISTOWN	
PROJECT NUMBER: BRS 0240(3)S	
FILE NAME: 78f329/STR/78f329sub.dgn	PLOT DATE: 16-NOV-2015
PROJECT LEADER: C. CARLSON	DRAWN BY: G. ROKES
DESIGNED BY: J. GRIFFIN	CHECKED BY: D. PETERSON
APPROACH SLAB #1 DETAILS	SHEET 74 OF 148

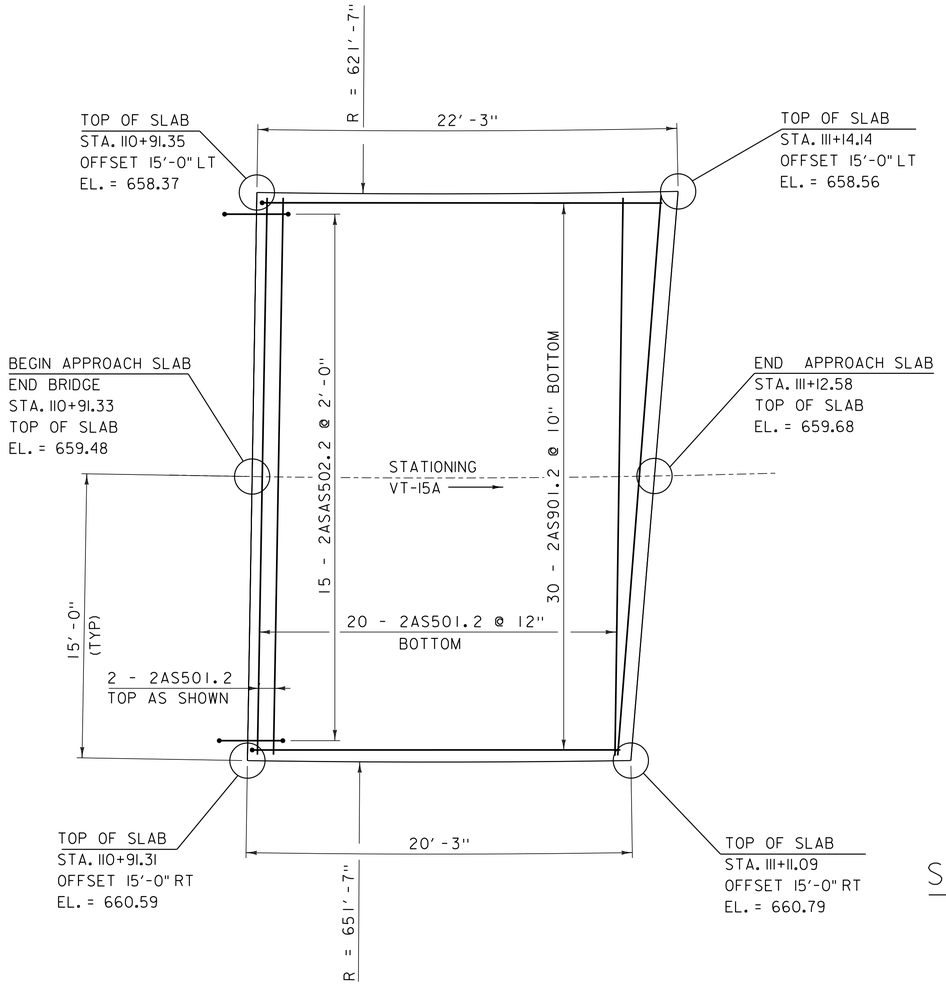

APPROACH SLAB NO. 2 PLAN

SCALE 1/4" = 1'-0"

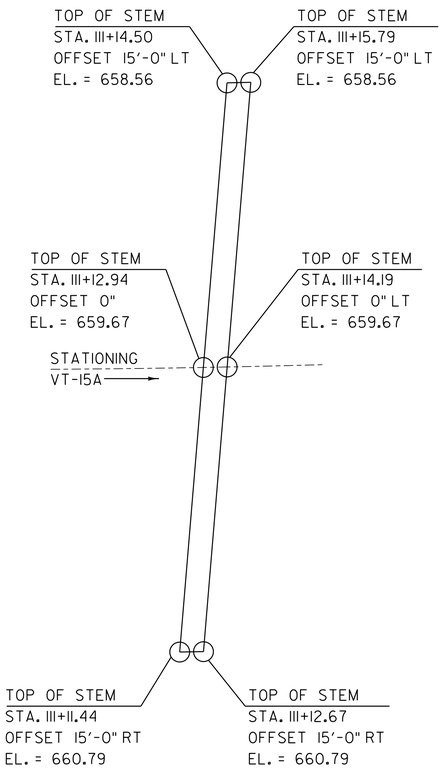

SLEEPER SLAB STEM PLAN

SCALE 1/4" = 1'-0"

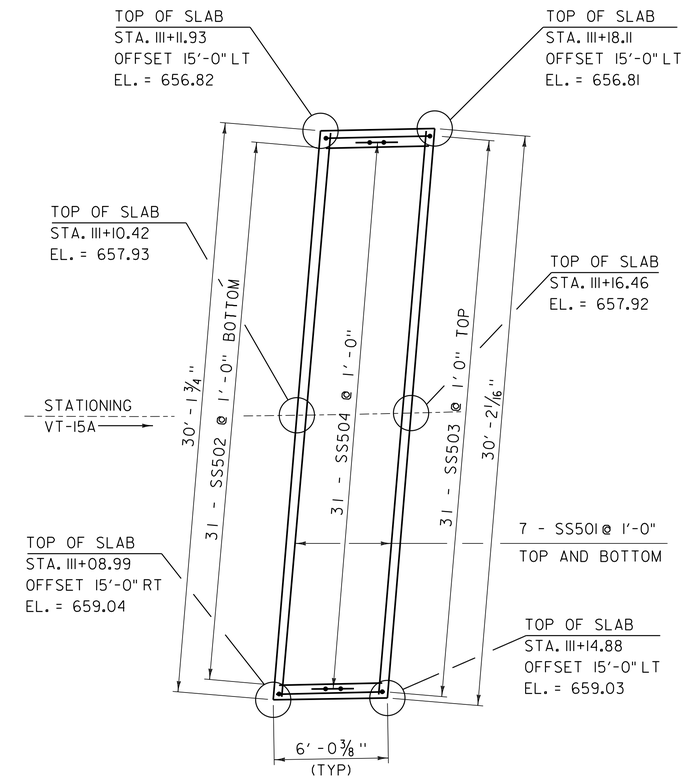

SLEEPER SLAB PLAN

SCALE 1/4" = 1'-0"

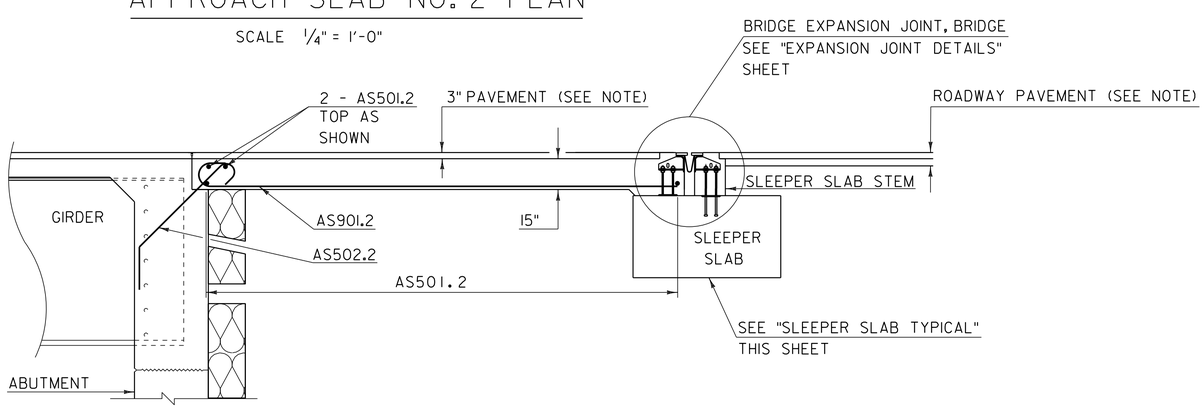

APPROACH SLAB #2 SECTION TYPICAL

NOT TO SCALE

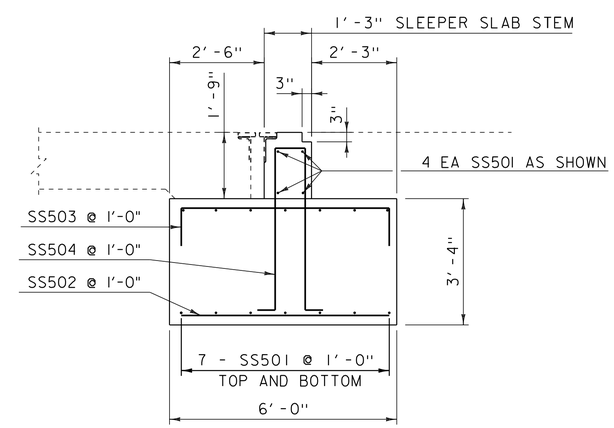

SLEEPER SLAB TYPICAL

SCALE 1/2" = 1'-0"

NOTE: FOR THE DEPTH AND FULL PAY ITEM NAME OF "PAVEMENT" USE THE "ROADWAY TYPICAL" DETAIL ITEM NAME LOCATED ON THE TYPICAL SHEET.

PROJECT NAME: MORRISTOWN	
PROJECT NUMBER: BRS 0240(3)S	
FILE NAME: 78f329/STR/78f329sub.dgn	PLOT DATE: 16-NOV-2015
PROJECT LEADER: C. CARLSON	DRAWN BY: G. ROKES
DESIGNED BY: J. GRIFFIN	CHECKED BY: D. PETERSON
APPROACH SLAB #2 DETAILS	SHEET 75 OF 148

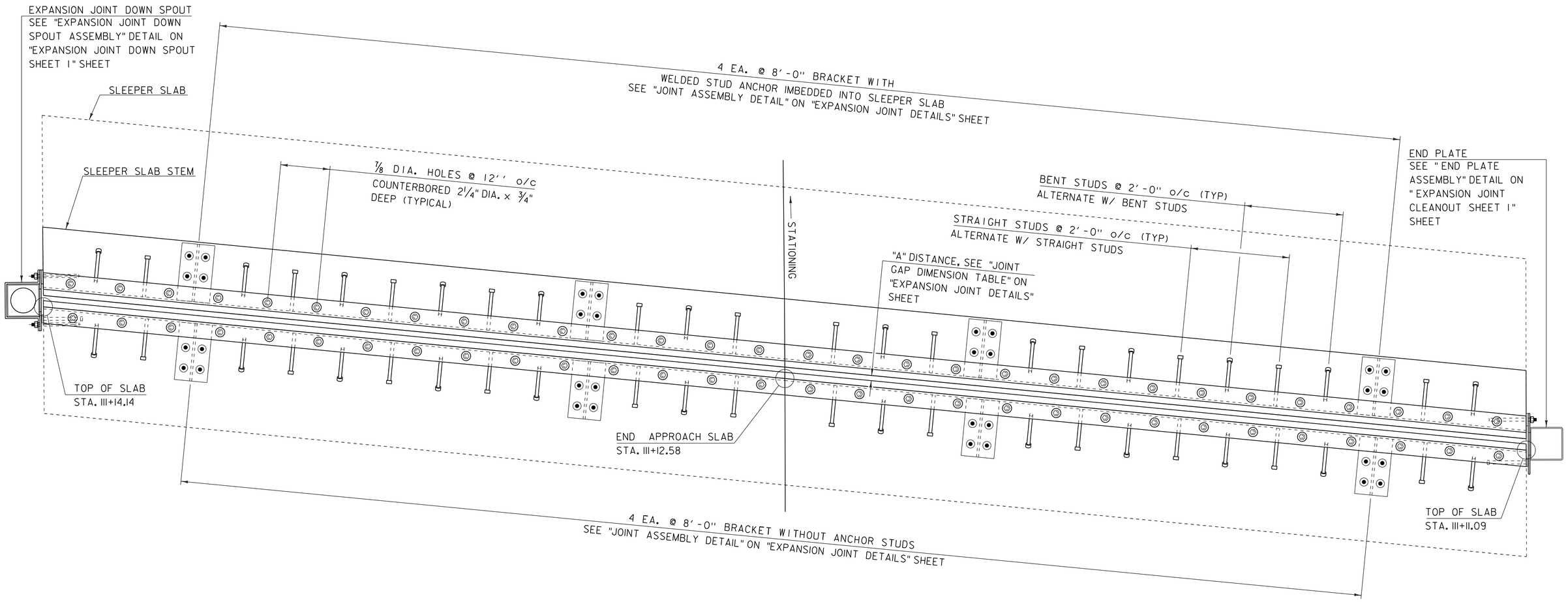

EXPANSION JOINT PLAN

SCALE: 1" = 1'-0"

PROJECT NAME: MORRISTOWN	
PROJECT NUMBER: BRS 0240(3)S	
FILE NAME: 78f329/STR/78f329sub.dgn	PLOT DATE: 16-NOV-2015
PROJECT LEADER: C. CARLSON	DRAWN BY: G.ROKES
DESIGNED BY: ------	CHECKED BY: ------
EXPANSION JOINT PLAN	SHEET 76 OF 148

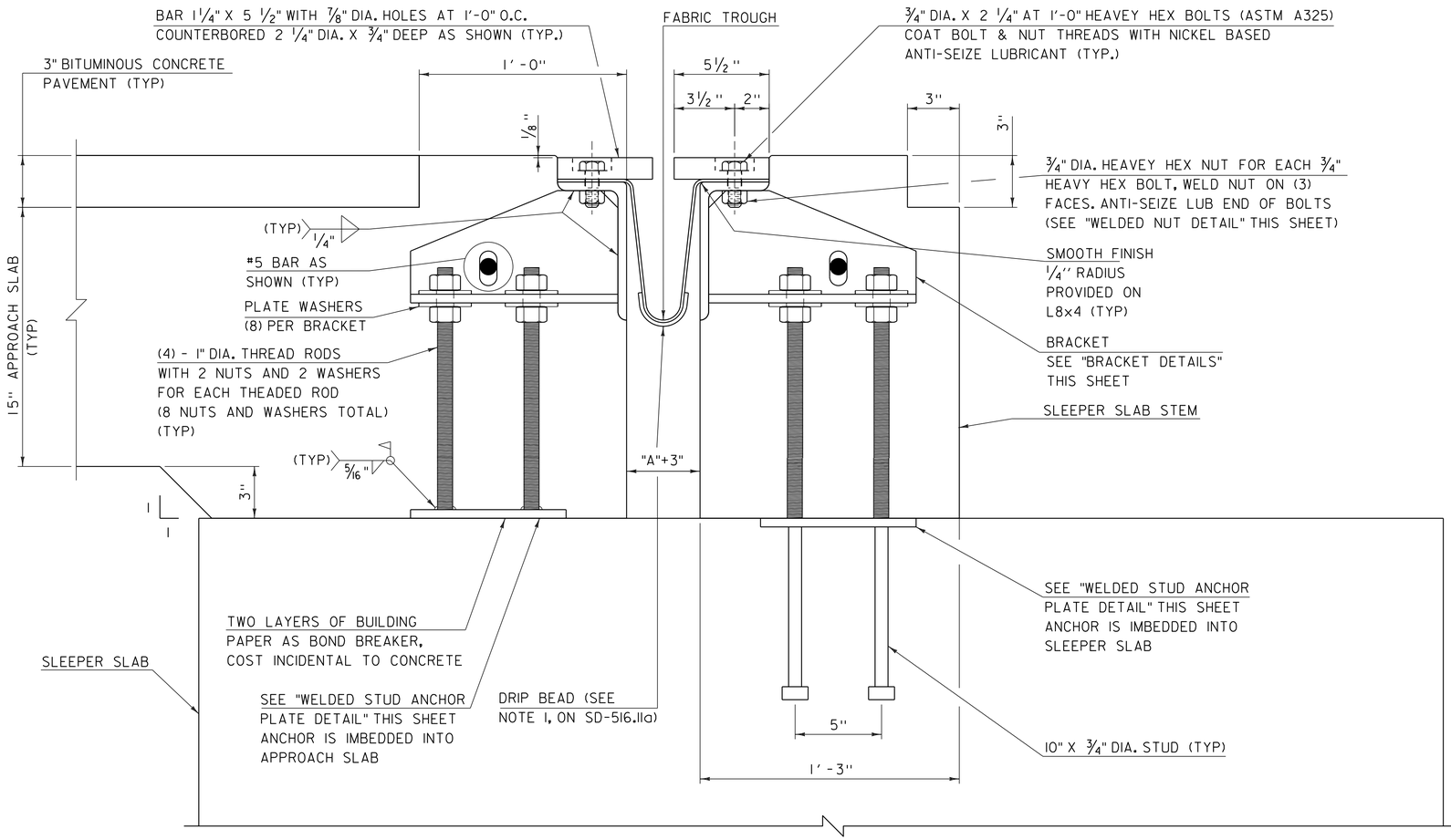

EXPANSION JOINT ASSEMBLY DETAIL

SCALE: 3" = 1'-0"

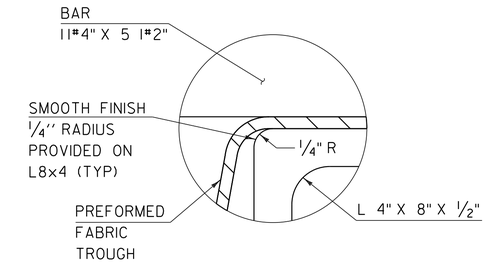

DETAIL A

NOT TO SCALE

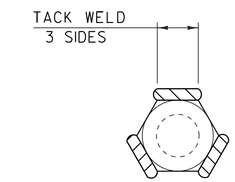

WELDED NUT DETAIL

NOT TO SCALE

TEMP: APPROXIMATE TEMPERATURE OF STEEL DURING JOINT PLACEMENT.

"A" DISTANCE: MEASURED DISTANCE DURING JOINT PLACEMENT.

TEMP.	"A" DIST.
0°	2 1/4"
15°	2"
30°	1 3/4"
45°	1 1/2"
60°	1 1/4"
75°	1"
90°	3/4"

JOINT GAP DIMENSION TABLE

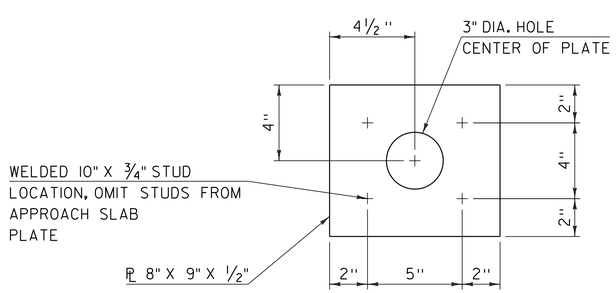

WELDED STUD ANCHOR PLATE DETAIL

SCALE: 3" = 1'-0"

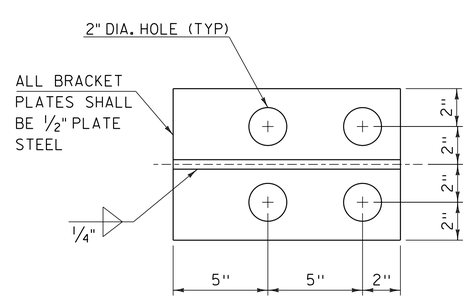

PLAN VIEW

SCALE: 3" = 1'-0"

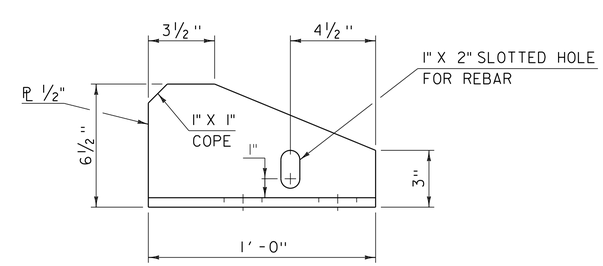

ELEVATION VIEW

SCALE: 3" = 1'-0"

BRACKET DETAILS

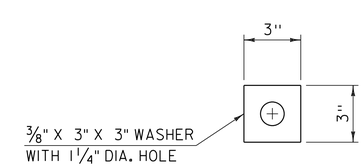

PLATE WASHER DETAIL

SCALE: 3" = 1'-0"

PROJECT NAME: MORRISTOWN	
PROJECT NUMBER: BRS 0240(3)S	
FILE NAME: 78f329/STR/78f329sub.dgn	PLOT DATE: 16-NOV-2015
PROJECT LEADER: C. CARLSON	DRAWN BY: G. ROKES
DESIGNED BY: J. GRIFFIN	CHECKED BY: D. PETERSON
EXPANSION JOINT DETAILS	SHEET 77 OF 148

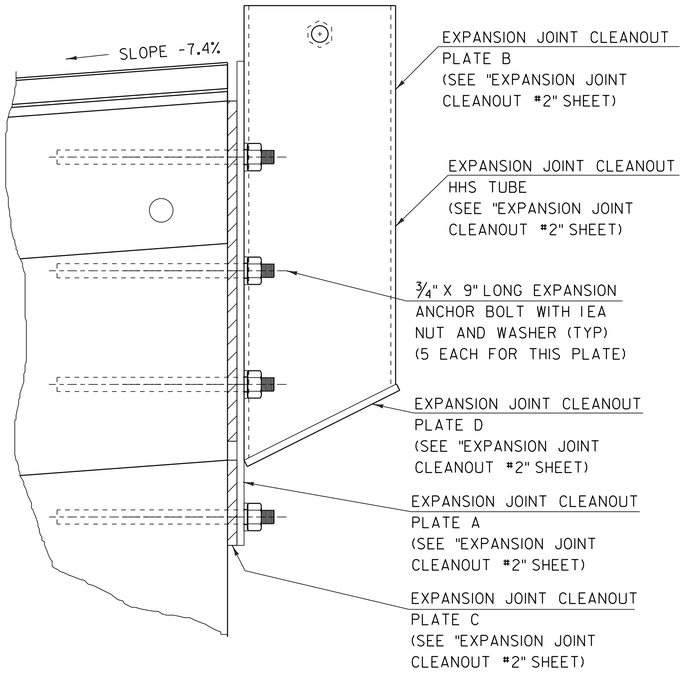

END PLATE DETAIL SIDE VIEW

SCALE: 3" = 1'-0"

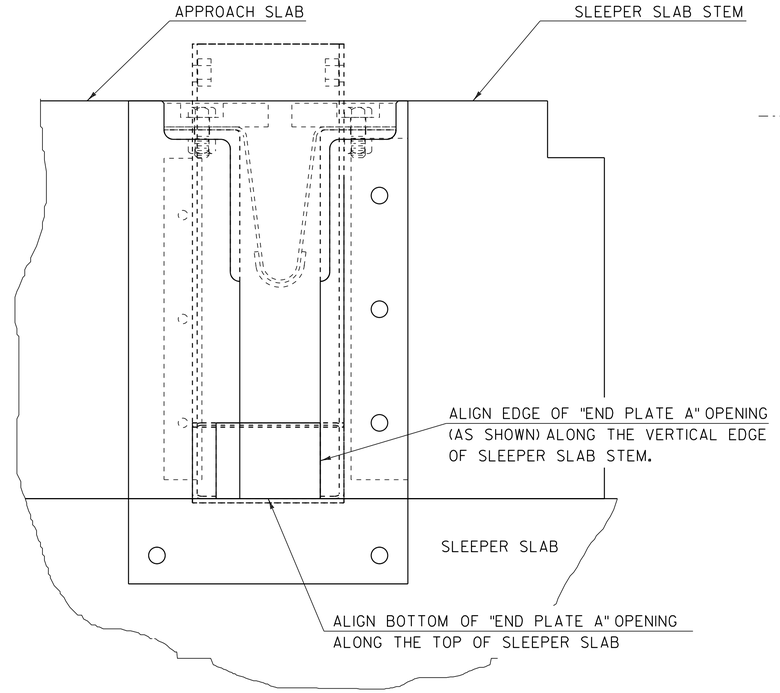

END PLATE DETAIL FRONT VIEW

SCALE: 3" = 1'-0"

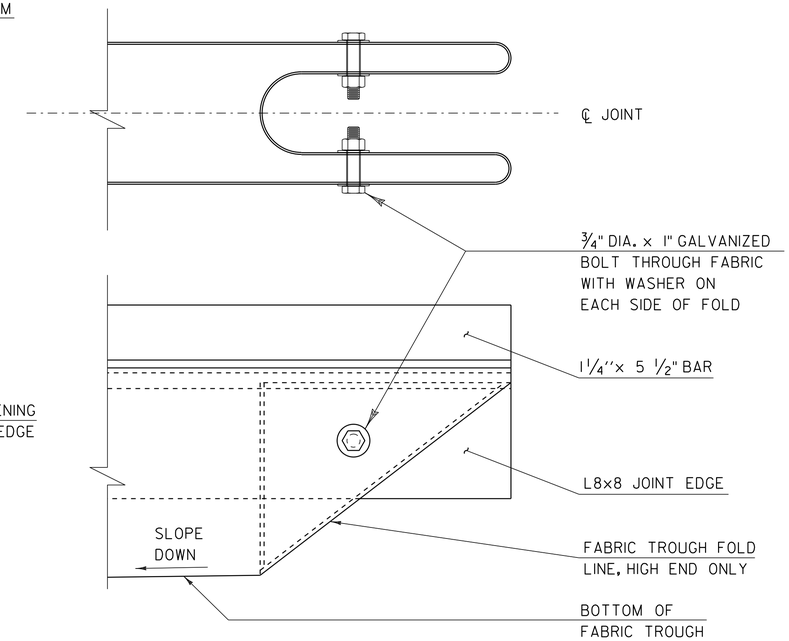

FOLDED TROUGH END DETAIL

SCALE: 3" = 1'-0"

1. TROUGH SHALL BE FOLDED AT HIGH ENDS. TROUGH SHALL FOLLOW ROAD SLOPE 7.4% DOWN TOWARD THE DRAINAGE SPOUT.

2. BOLTS, NUTS AND WASHERS FOR FOLD SHALL MEET REQUIREMENTS OF SUBSECTION 714.04 AND SHALL BE GALVANIZED.

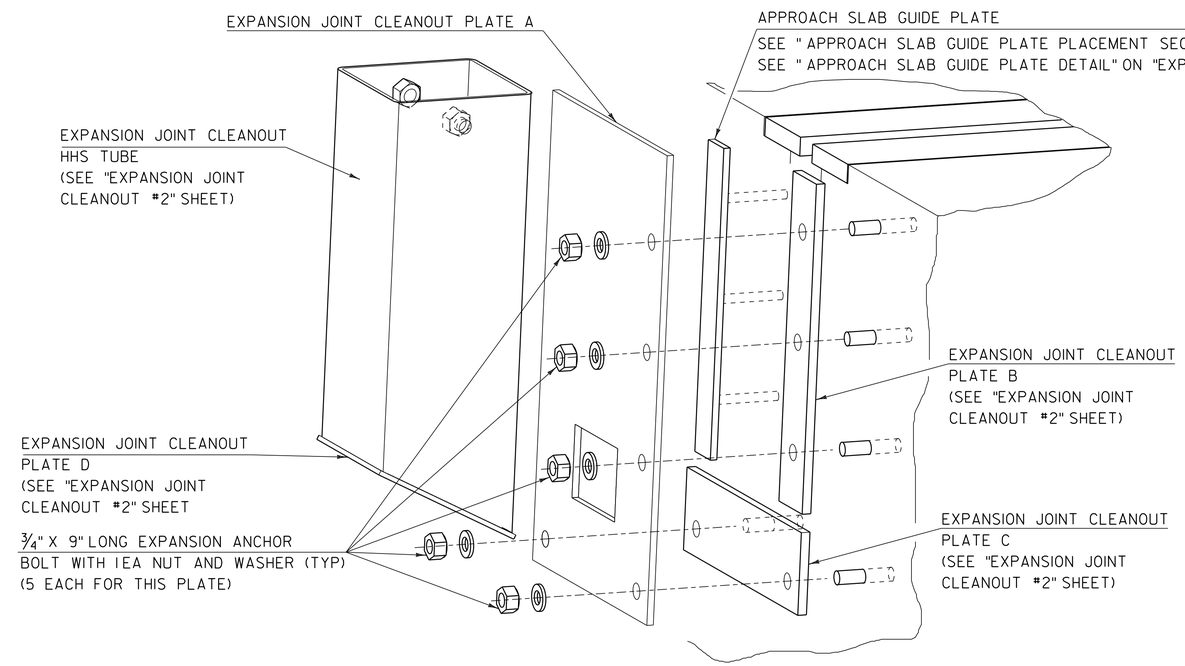

SEE "EXPANSION JOINT CLEAN OUT #2" FOR DIMENSIONING OF PLATES A,B,C,D AND EXPANSION JOINT CLEANOUT HHS TUBE

END PLATE ASSEMBLY

SCALE: 3" = 1'-0"

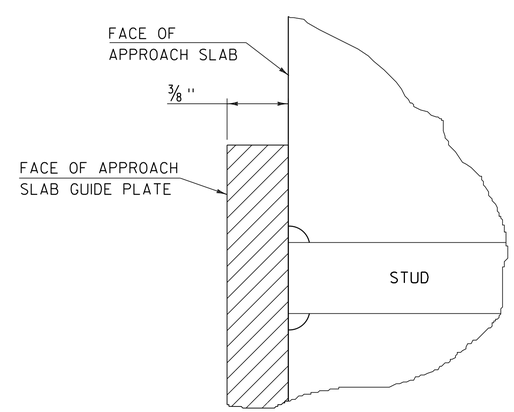

APPROACH SLAB GUIDE PLATE PLACEMENT SECTION

NOT TO SCALE

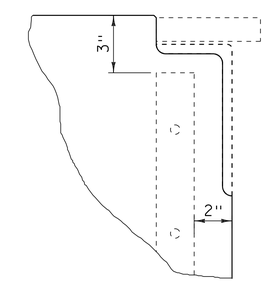

APPROACH SLAB GUIDE PLATE PLACEMENT TYPICAL ELEVATION DETAIL

SCALE: 3" = 1'-0"

SCALE: 3" = 1'-0"

PROJECT NAME: MORRISTOWN	
PROJECT NUMBER: BRS 0240(3)S	
FILE NAME: 78f329/STR/78f329sub.dgn	PLOT DATE: 16-NOV-2015
PROJECT LEADER: C. CARLSON	DRAWN BY: G. ROKES
DESIGNED BY: J. GRIFFIN	CHECKED BY: D. PETERSON
EXPANSION JOINT CLEANOUT #1	SHEET 78 OF 148

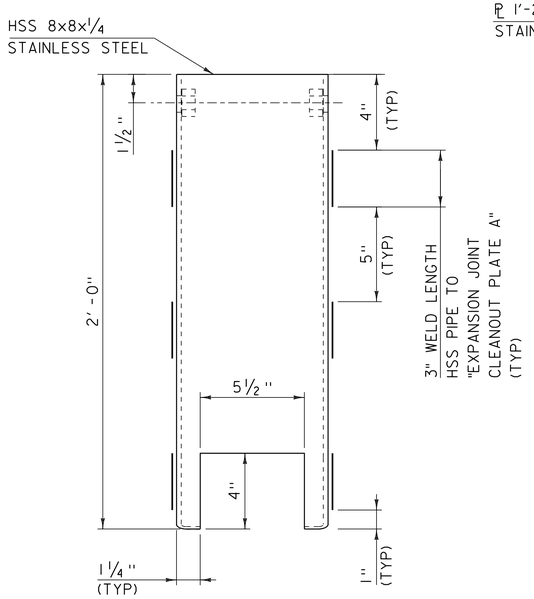

EXPANSION JOINT CLEANOUT
HSS TUBE FRONT DETAIL

SCALE: 3" = 1'-0"

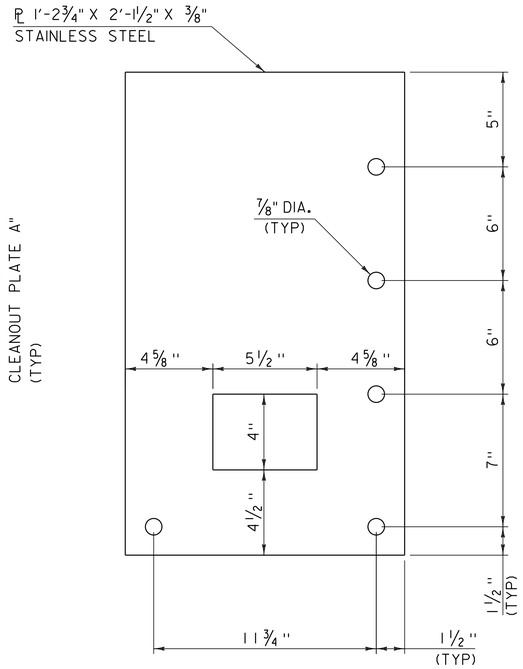

EXPANSION JOINT CLEANOUT
PLATE A DETAIL

SCALE: 3" = 1'-0"

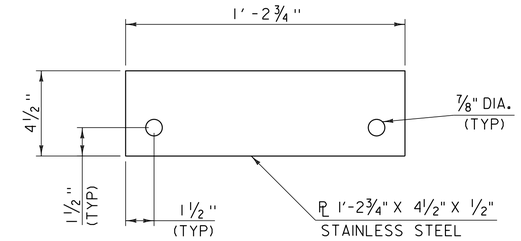

EXPANSION JOINT CLEANOUT
PLATE C DETAIL

SCALE: 3" = 1'-0"

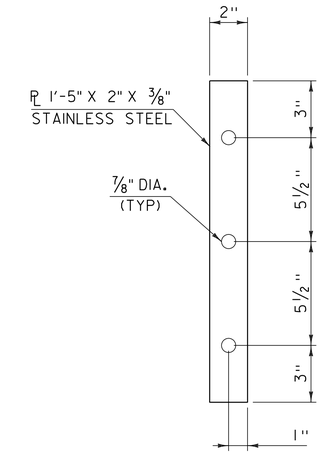

APPROACH SLAB
GUIDE PLATE DETAIL

SCALE: 3" = 1'-0"

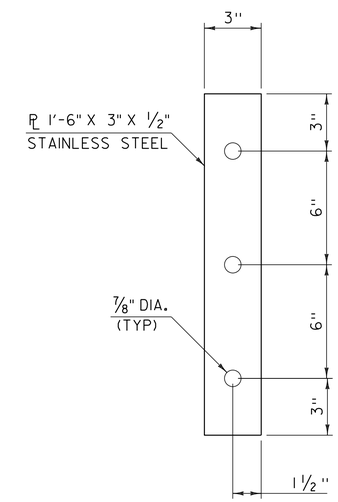

EXPANSION JOINT
CLEANOUT PLATE
B DETAIL

SCALE: 3" = 1'-0"

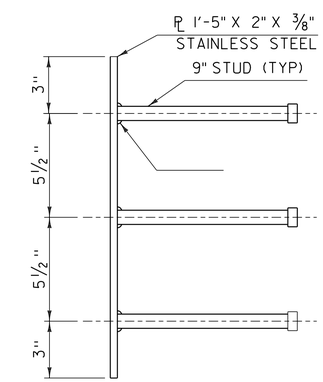

APPROACH SLAB
GUIDE PLATE ELEVATION
DETAIL

SCALE: 3" = 1'-0"

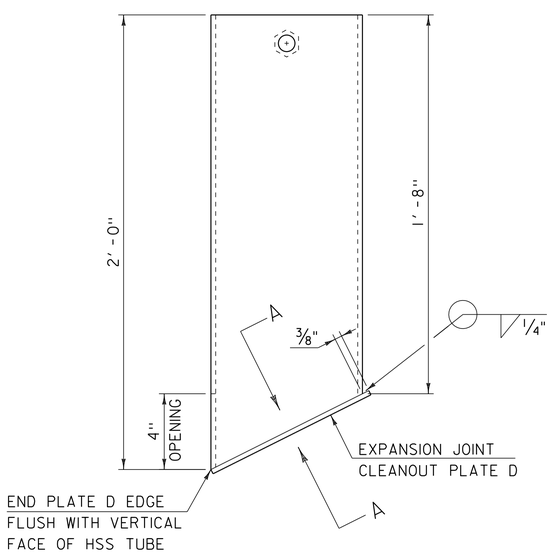

EXPANSION JOINT
CLEANOUT SIDE DETAIL

SCALE: 3" = 1'-0"

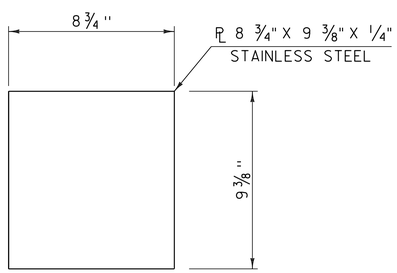

EXPANSION JOINT
CLEANOUT PLATE
D DETAIL

SCALE: 3" = 1'-0"

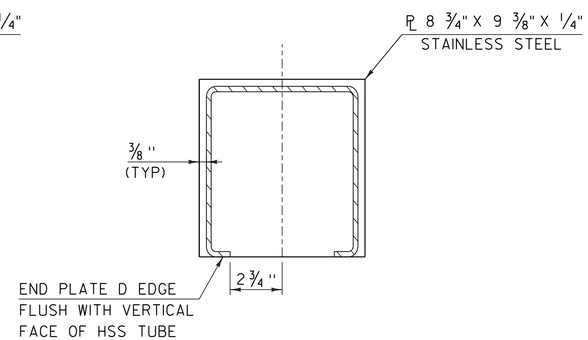

A-A VIEW

SCALE: 3" = 1'-0"

PROJECT NAME: MORRISTOWN	
PROJECT NUMBER: BRS 0240(3)S	
FILE NAME: 78f329/STR/78f329sub.dgn	PLOT DATE: 16-NOV-2015
PROJECT LEADER: C. CARLSON	DRAWN BY: G. ROKES
DESIGNED BY: ------	CHECKED BY: ------
EXPANSION JOINT CLEANOUT #2	SHEET 79 OF 148

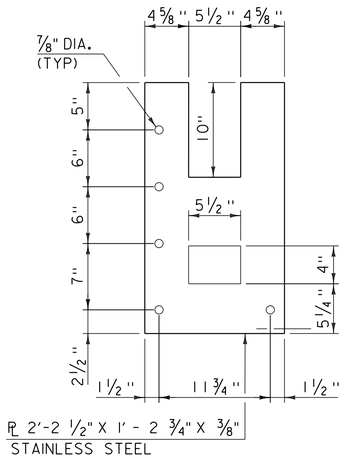

BASE PLATE ELEVATION

SCALE: 1 1/2" = 1'-0"

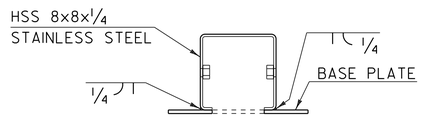

DOWN SPOUT HSS PIPE WELD TO BASE PLATE

SCALE: 1 1/2" = 1'-0"

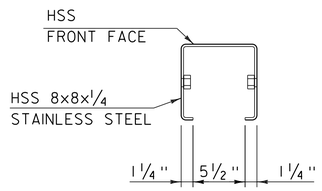

DOWN SPOUT HSS PIPE PLAN

SCALE: 1 1/2" = 1'-0"

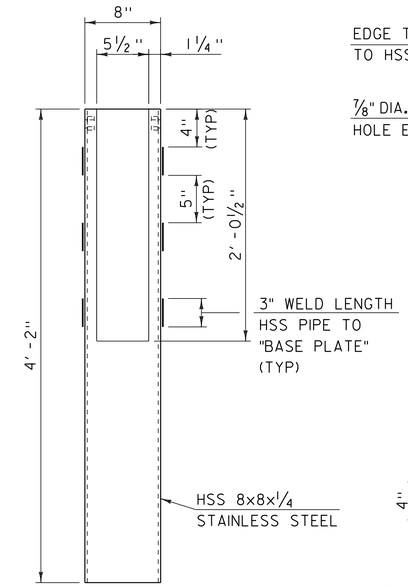

DOWN SPOUT HSS PIPE

SCALE: 1 1/2" = 1'-0"

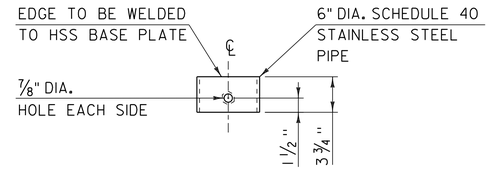

6" DIA PIPE COLLAR ELEVATION

SCALE: 1 1/2" = 1'-0"

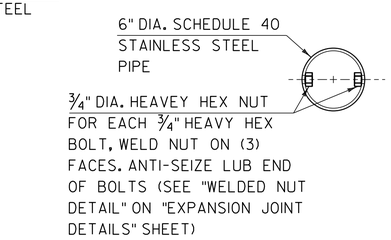

6" DIA PIPE COLLAR PLAN

SCALE: 1 1/2" = 1'-0"

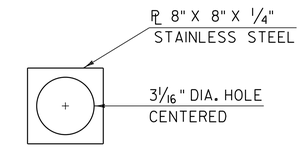

HSS BASE PLATE

SCALE: 1 1/2" = 1'-0"

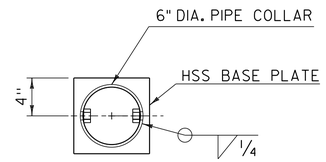

6" DIA PIPE COLLAR TO HSS BASE PLATE DETAIL

SCALE: 1 1/2" = 1'-0"

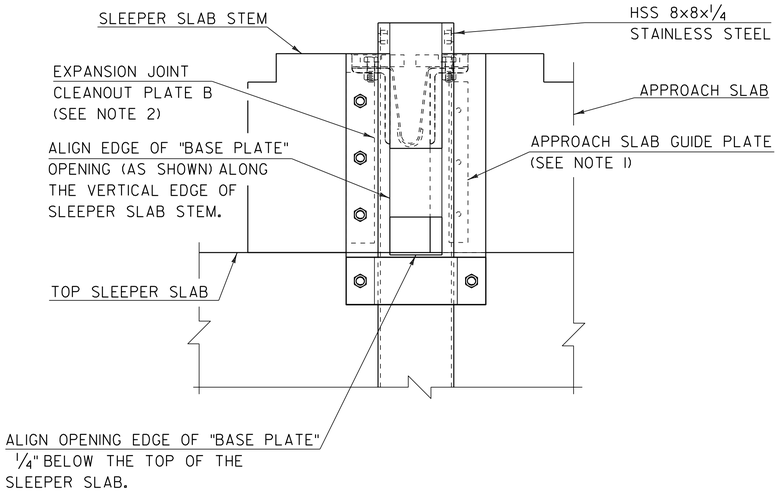

EXPANSION JOINT DOWN SPOUT (FRONT VIEW)

SCALE: 1 1/2" = 1'-0"

NOTES:

1. APPROACH SLAB GUIDE PLATE SEE "APPROACH SLAB GUIDE PLATE DETAIL" ON "EXPANSION JOINT CLEANOUT #2". AND "APPROACH SLAB GUIDE PLATE PLACEMENT SECTION" DETAIL ON "EXPANSION JOINT CLEANOUT #1" SHEET
2. EXPANSION JOINT CLEANOUT PLATE B SEE "EXPANSION JOINT CLEANOUT PLATE B DETAIL" ON "EXPANSION JOINT CLEANOUT #2" SHEET
3. SEE "EXPANSION JOINT DOWN SPOUT #2" SHEET FOR THE FOLLOWING: BRACKET, 6" DIA. 90^ SCHDULE 40 PVC PIPE, BAR A , B , C ,

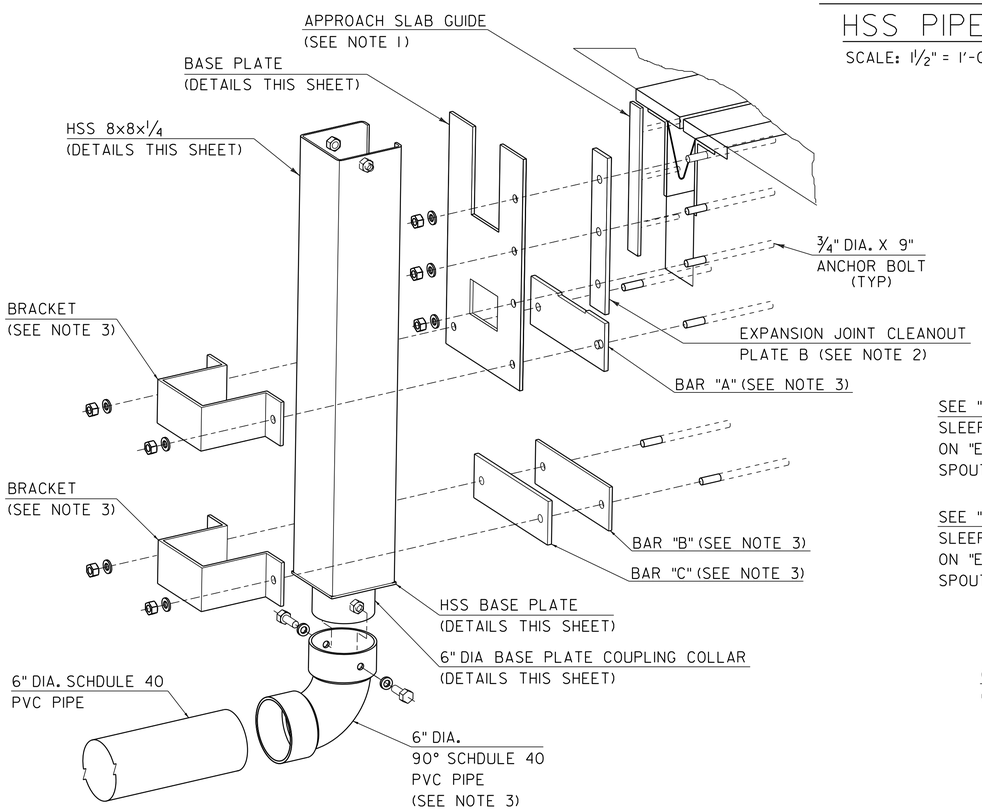

EXPANSION JOINT DOWN SPOUT ASSEMBLY

SCALE: 1 1/2" = 1'-0"

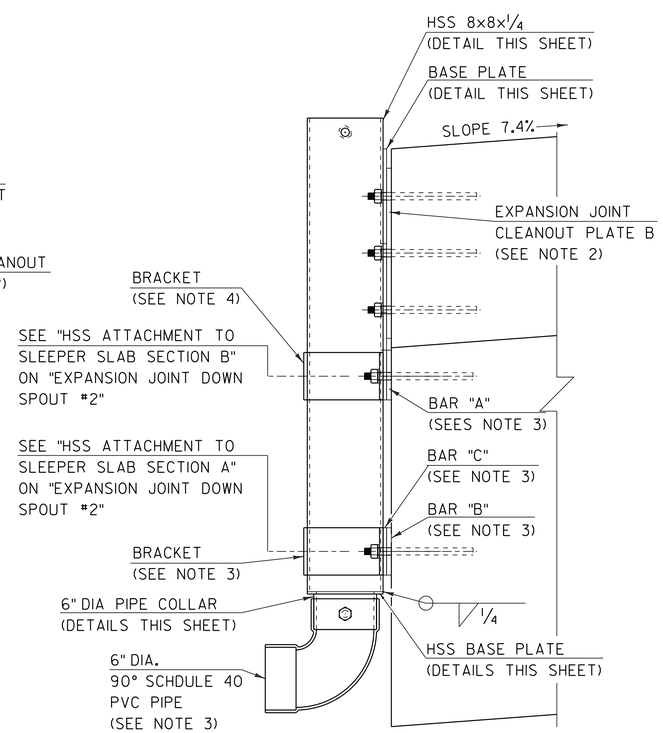

EXPANSION JOINT DOWN SPOUT (SIDE VIEW)

SCALE: 1 1/2" = 1'-0"

PROJECT NAME: MORRISTOWN	
PROJECT NUMBER: BRS 0240(3)S	
FILE NAME: 78f329/STR/78f329sub.dgn	PLOT DATE: 16-NOV-2015
PROJECT LEADER: C. CARLSON	DRAWN BY: G. ROKES
DESIGNED BY: ------	CHECKED BY: ------
EXPANSION JOINT DOWN SPOUT #1	SHEET 80 OF 148

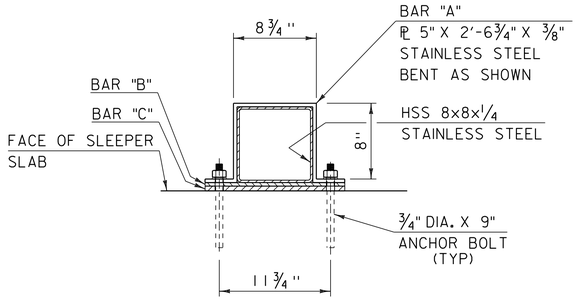

HSS PIPE ATTACHMENT TO SLEEPER SLAB SECTION A

SCALE: 1 1/2" = 1'-0"

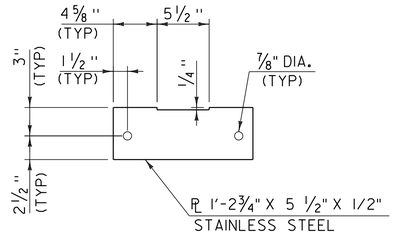

ELEVATION VIEW BAR "A"

SCALE: 1 1/2" = 1'-0"

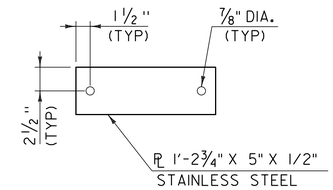

ELEVATION VIEW BAR "B"

SCALE: 1 1/2" = 1'-0"

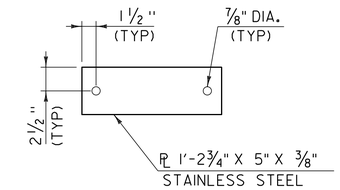

ELEVATION VIEW BAR "C"

SCALE: 1 1/2" = 1'-0"

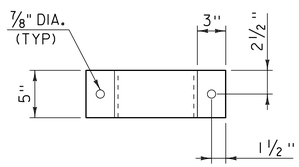

BRACKET ELEVATION

SCALE: 1 1/2" = 1'-0"

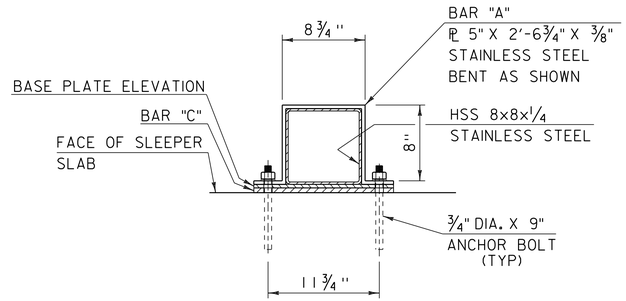

HSS PIPE ATTACHMENT TO SLEEPER SLAB SECTION B

SCALE: 1 1/2" = 1'-0"

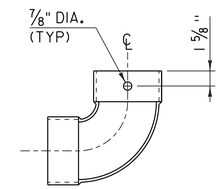

6" DIA. 90° SCHDULE 40 PVC PIPE SIDE VIEW

SCALE: 1 1/2" = 1'-0"

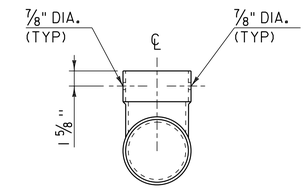

6" DIA. 90° SCHDULE 40 PVC PIPE FRONT VIEW

SCALE: 1 1/2" = 1'-0"

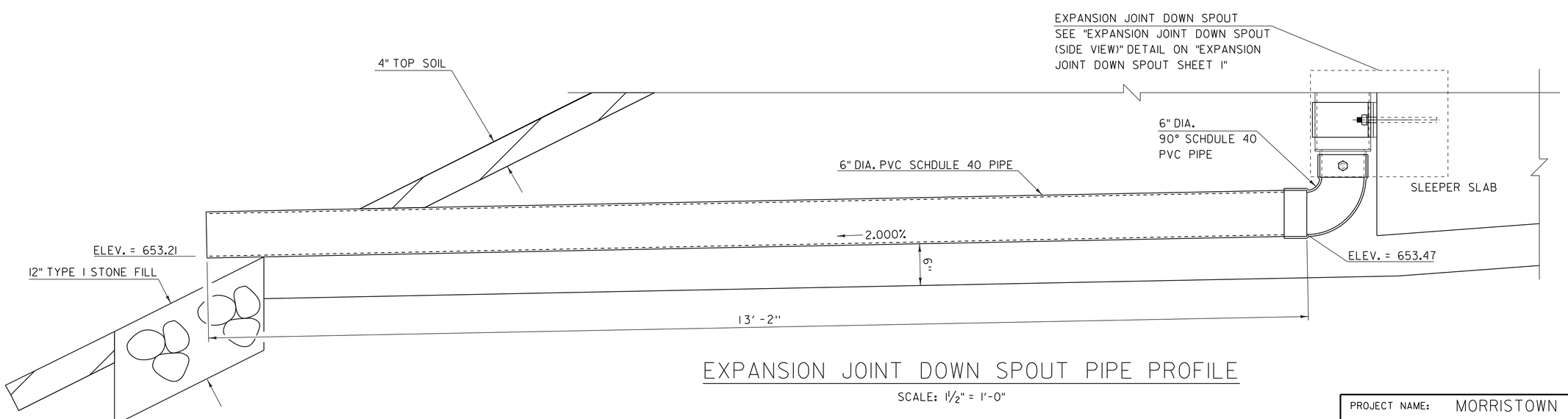

EXPANSION JOINT DOWN SPOUT PIPE PROFILE

SCALE: 1 1/2" = 1'-0"

PROJECT NAME: MORRISTOWN	
PROJECT NUMBER: BRS 0240(3)S	
FILE NAME: 78f329/STR/78f329sub.dgn	PLOT DATE: 16-NOV-2015
PROJECT LEADER: C. CARLSON	DRAWN BY: ------
DESIGNED BY: ------	CHECKED BY: ------
EXPANSION JOINT DOWN SPOUT #2	SHEET 81 OF 148

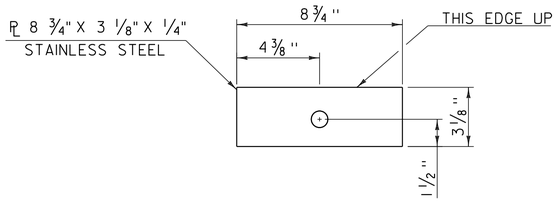

HSS PIPE CAP
PLATE B
SCALE: 3" = 1'-0"

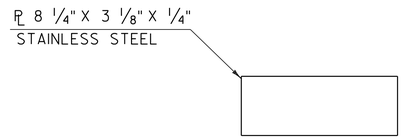

HSS PIPE CAP
PLATE C
SCALE: 3" = 1'-0"

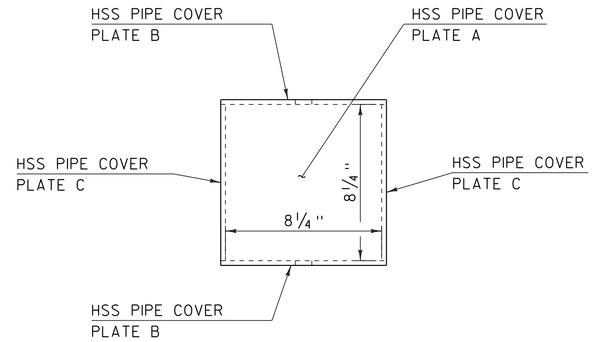

HSS PIPE CAP TOP
SCALE: 3" = 1'-0"

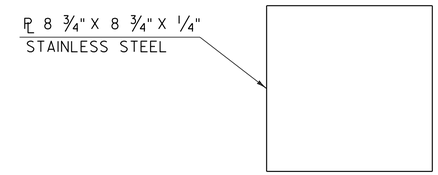

HSS PIPE CAP
PLATE A
SCALE: 3" = 1'-0"

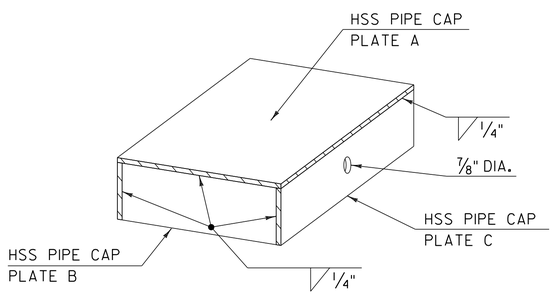

HSS PIPE CAP
SCALE: 3" = 1'-0"

NOTE:
ALL CAP CORNERS WILL BE GROUND DOWN
LEAVING THE FINAL CAP WITH NO SHARP EDGES

PROJECT NAME: MORRISTOWN	
PROJECT NUMBER: BRS 0240(3)S	
FILE NAME: 78f329/STR/78f329sub.dgn	PLOT DATE: 16-NOV-2015
PROJECT LEADER: C. CARLSON	DRAWN BY: G. ROKES
DESIGNED BY: ------	CHECKED BY: ------
EXPANSION JOINT PIPE CAP	SHEET 82 OF 148

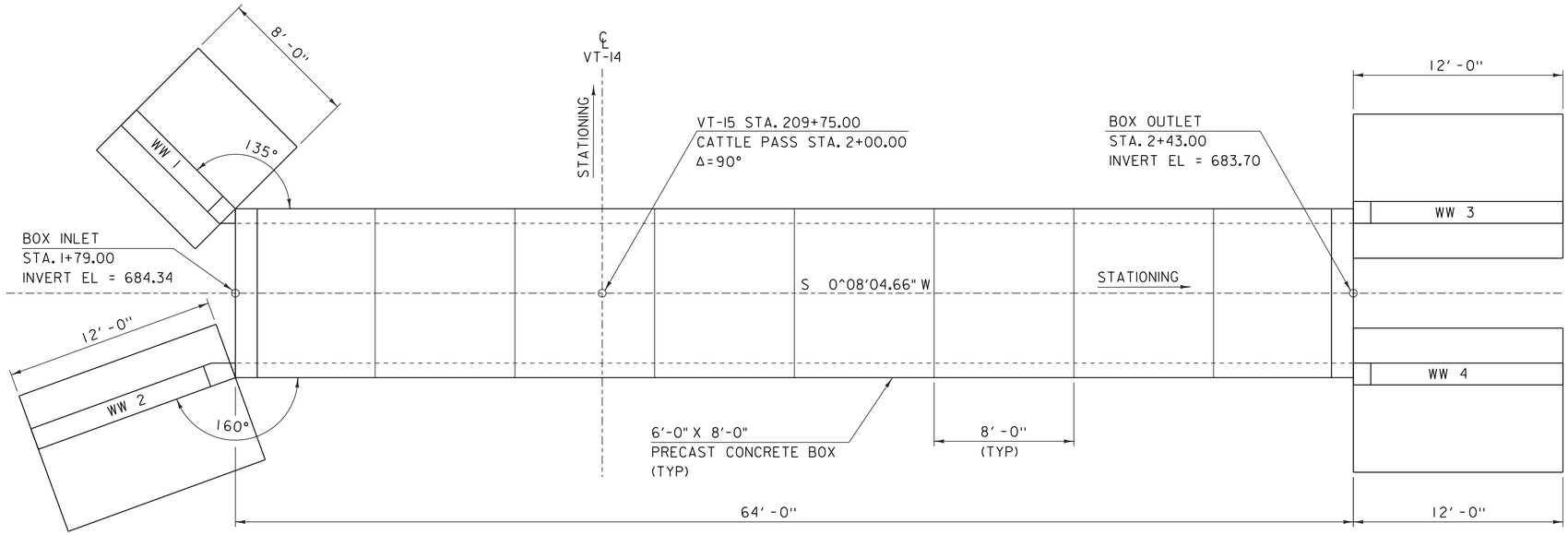

CATTLE PASS PRECAST CONCRETE BOX PLAN

SCALE 1/4" = 1'-0"

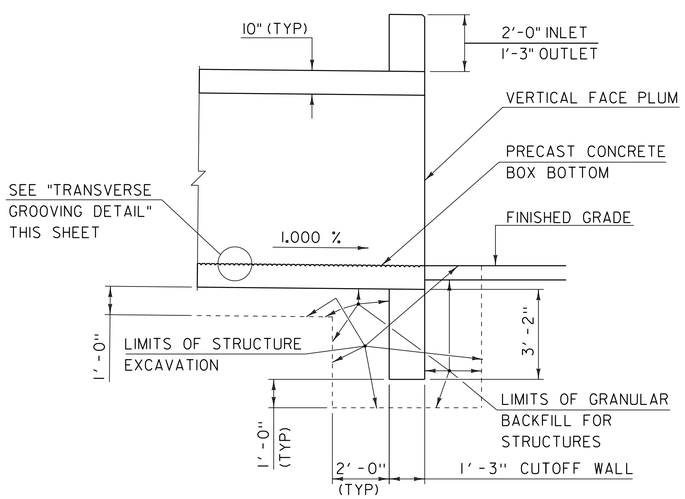

PRECAST CONCRETE BOX END TYPICAL

SCALE 3/8" = 1'-0"

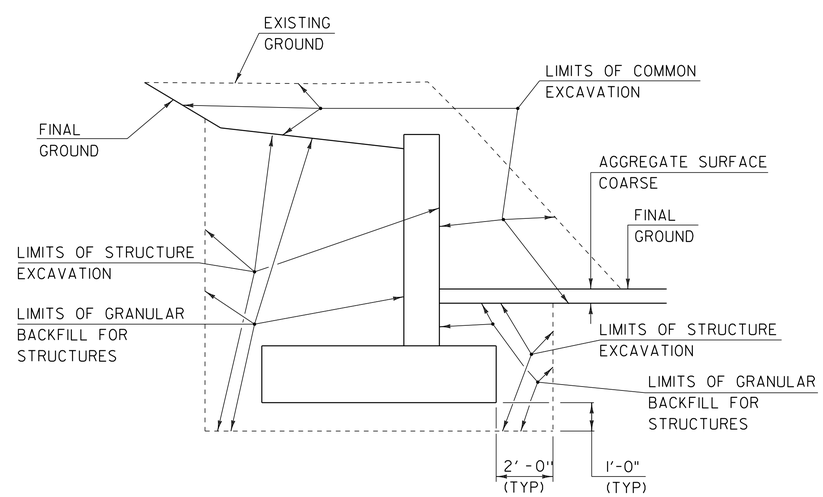

WINGWALL EXCAVATION DETAIL

SCALE 3/8" = 1'-0"

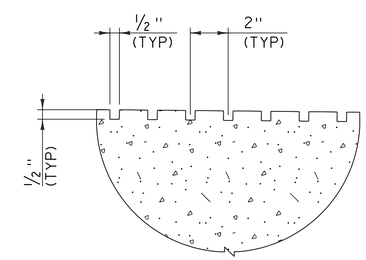

TRANSVERSE GROOVING DETAIL

NTS

PROJECT NAME: MORRISTOWN	
PROJECT NUMBER: STP HES 030-2(28)	
FILE NAME: 78f329/STR/s78f329box.dgn	PLOT DATE: 16-NOV-2015
PROJECT LEADER: C. CARLSON	DRAWN BY: G. ROKES
DESIGNED BY: N. VANDENBERG	CHECKED BY: N. VANDENBERG
PRECAST BOX END TYPICAL	SHEET 83 OF 148

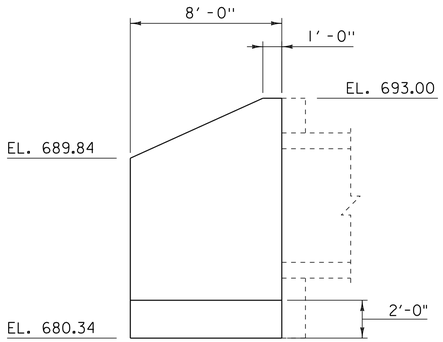

WINGWALL NO. 1 ELEVATION

SCALE 1/4" = 1'-0"

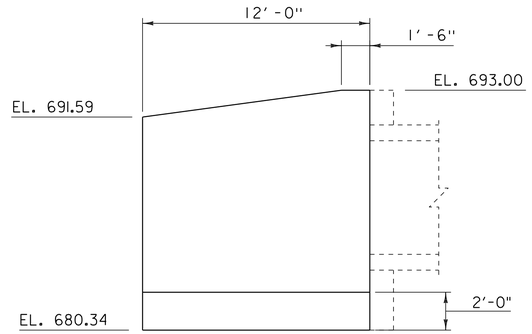

WINGWALL NO. 2 ELEVATION

SCALE 1/4" = 1'-0"

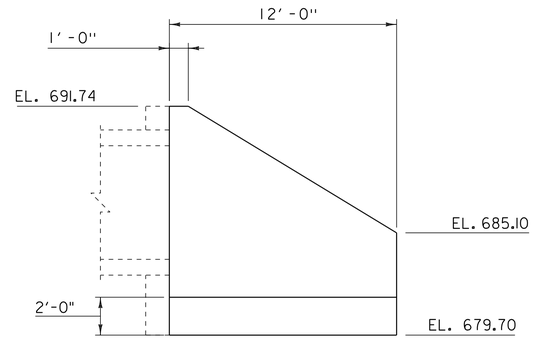

WINGWALL NO. 3 ELEVATION

SCALE 1/4" = 1'-0"

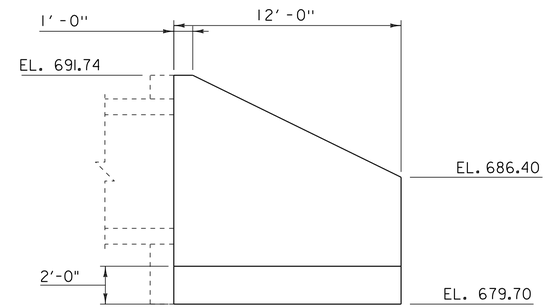

WINGWALL NO. 4 ELEVATION

SCALE 1/4" = 1'-0"

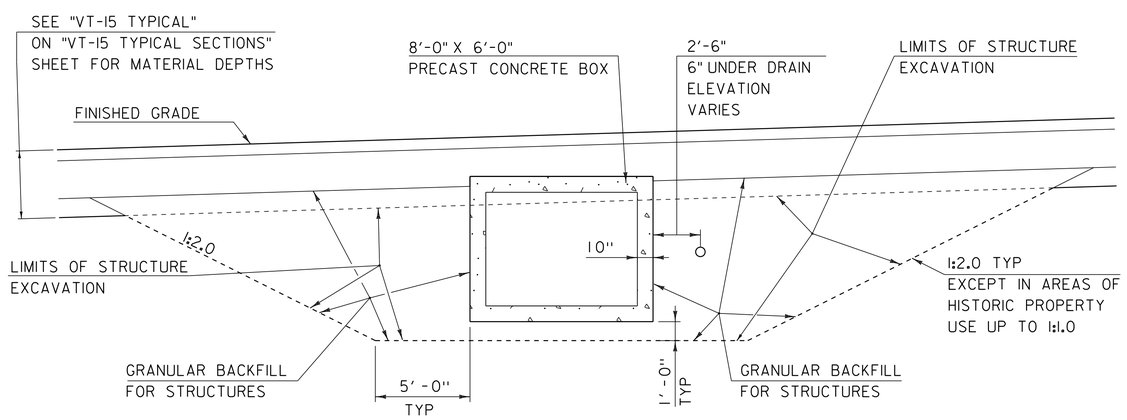

PRECAST CONCRETE CATTLE PASS TYPICAL

SCALE 1/4" = 1'-0"

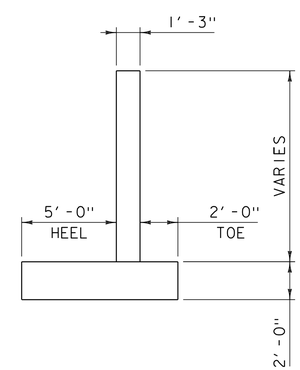

PRECAST WINGWALL TYPICAL

SCALE 1/4" = 1'-0"

PROJECT NAME: MORRISTOWN	
PROJECT NUMBER: STP HES 030-2(28)	
FILE NAME: 78f329/STR/s78f329box.dgn	PLOT DATE: 16-NOV-2015
PROJECT LEADER: C. CARLSON	DRAWN BY: G. ROKES
DESIGNED BY: N. VANDENBERG	CHECKED BY: N. VANDENBERG
PRECAST BOX WINGWALL ELEVATION	SHEET 84 OF 148

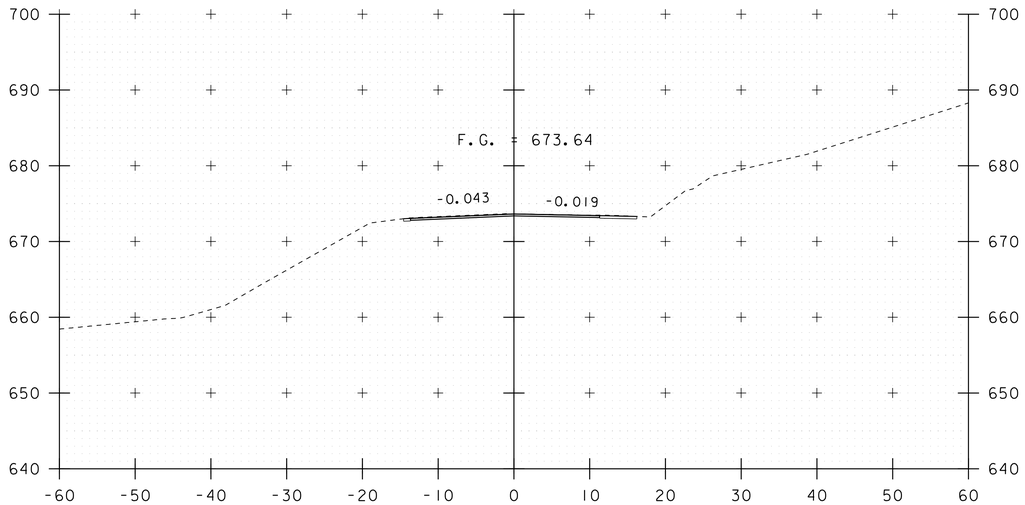

102+50

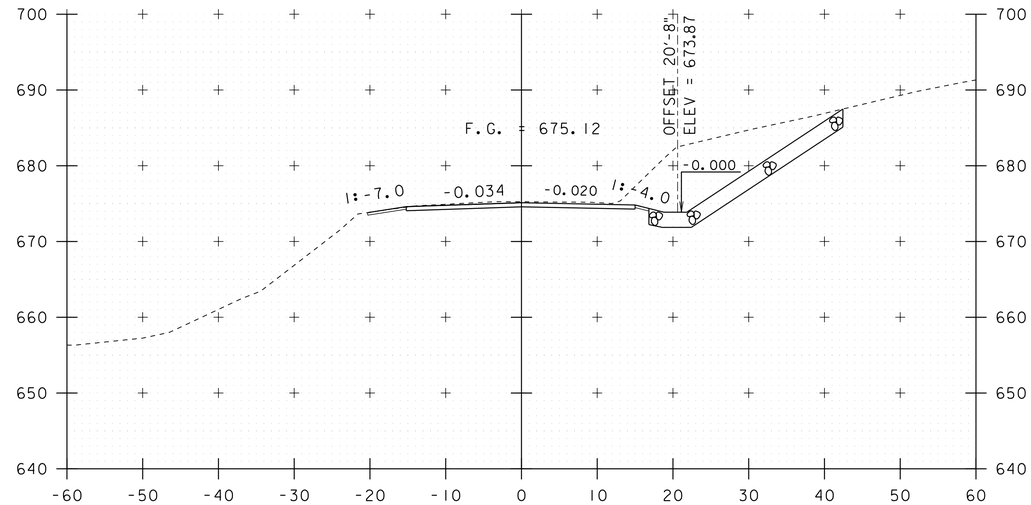

103+50

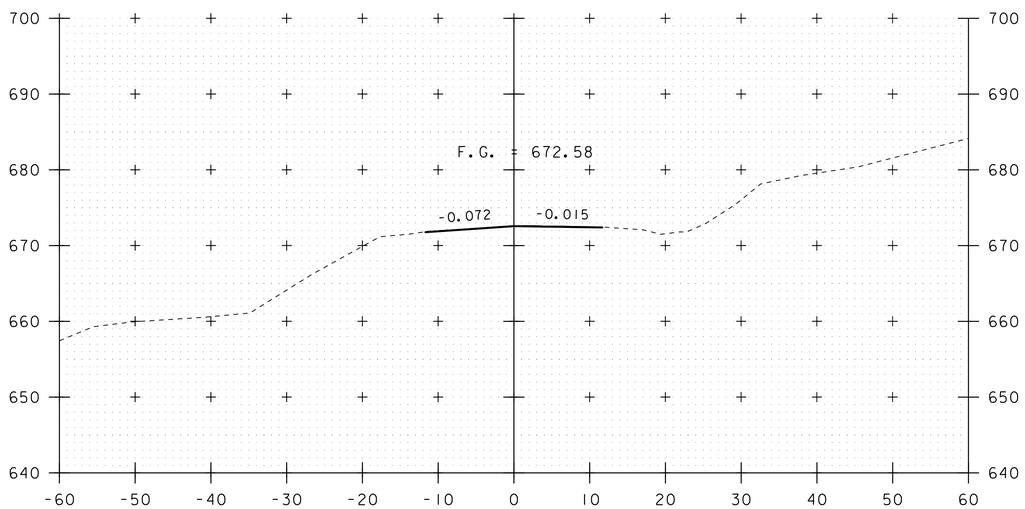

102+00
BEGIN APPROACH

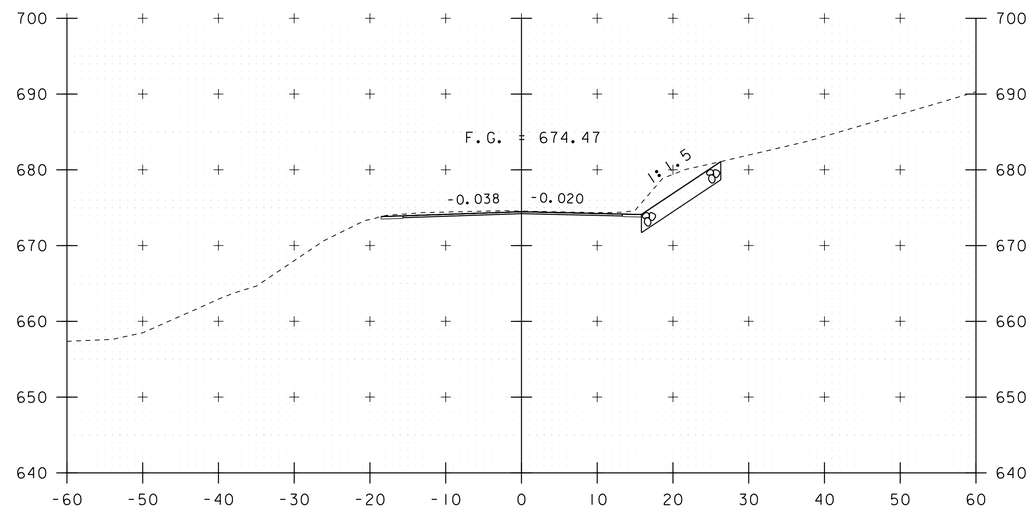

103+00

PROJECT NAME: MORRISTOWN	
PROJECT NUMBER: BRO 0240(3)S	
FILE NAME: 78f329xs.dgn	PLOT DATE: 16-NOV-2015
PROJECT LEADER: C. CARLSON	DRAWN BY: G. ROKES
DESIGNED BY: N. VANDENBERG	CHECKED BY: J. LACROIX
VT-15A SECTIONS SHEET 1	SHEET 85 OF 148

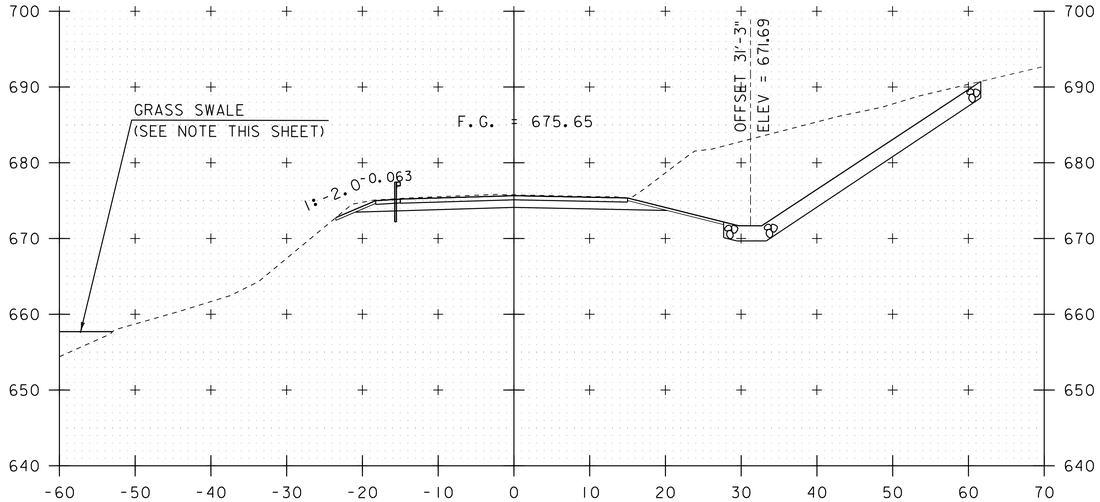

104+50

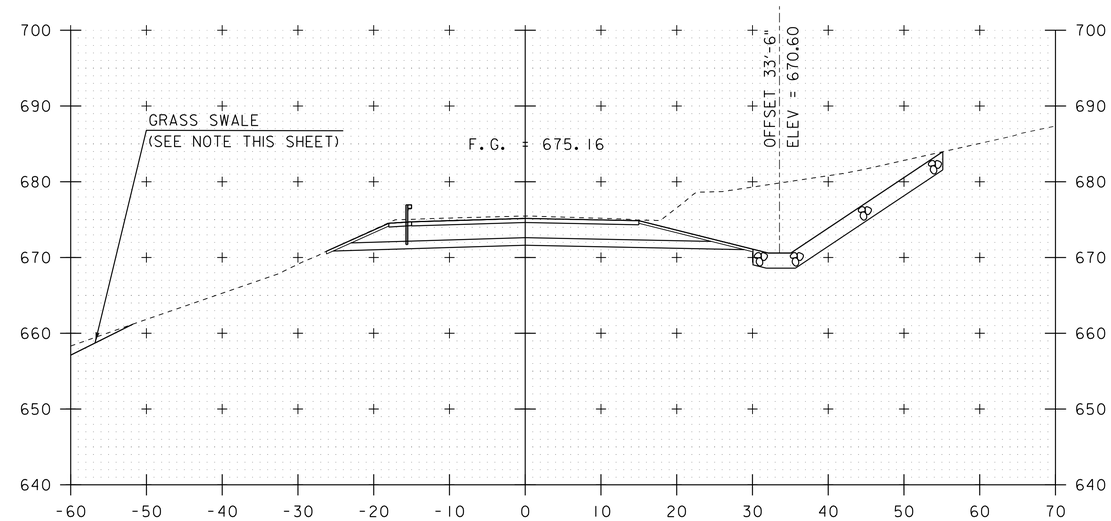

105+00

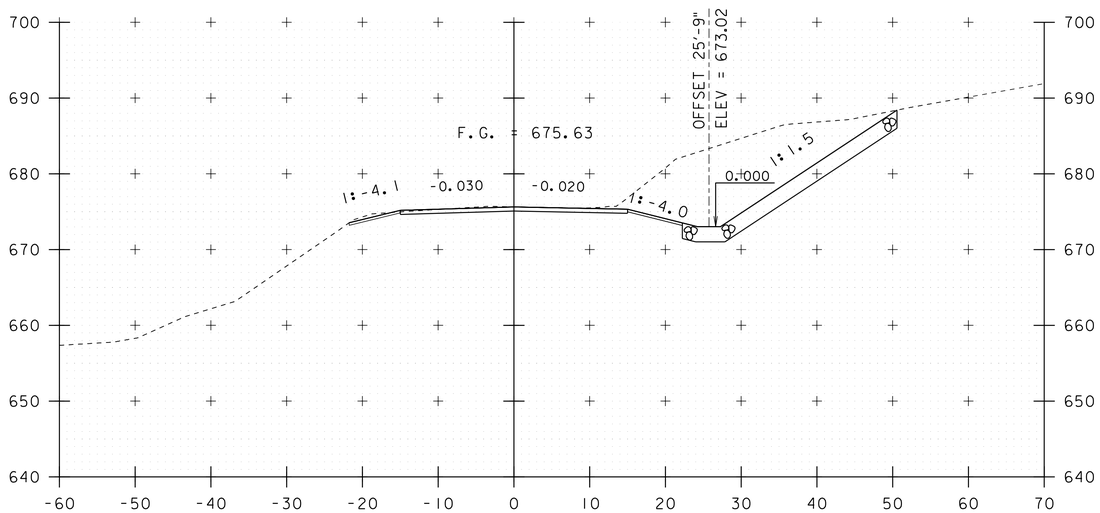

104+00

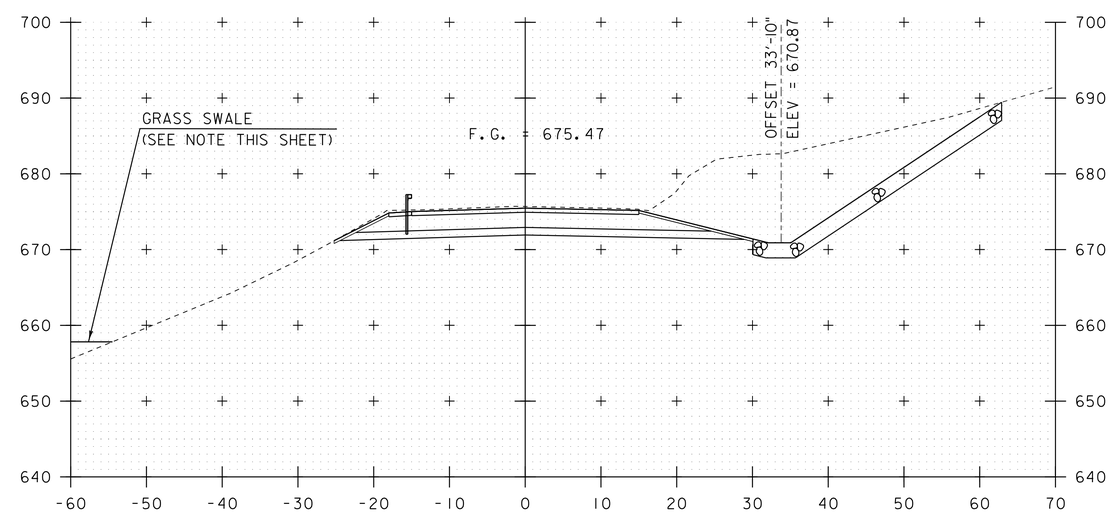

104+75
BEGIN PROJECT

NOTE: FOR ADDITIONAL INFORMATION REGARDING THE STORMWATER GRASS TREATMENT SWALE, SEE "GRASS TREATMENT SWALE PLAN" SHEET FOR ALIGNMENT INFORMATION, "GRASS TREATMENT SWALE PROFILE" ON THE , "DRAINAGE SYSTEMS PROFILES" SHEET AND THE "GRASS TREATMENT SWALE SECTIONS" SHEETS.

PROJECT NAME: MORRISTOWN	
PROJECT NUMBER: BRO 0240(3)S	
FILE NAME: 78f329xs.dgn	PLOT DATE: 16-NOV-2015
PROJECT LEADER: C. CARLSON	DRAWN BY: G. ROKES
DESIGNED BY: N. VANDENBERG	CHECKED BY: J. LACROIX
VT-15A SECTIONS SHEET 2	SHEET 86 OF 148

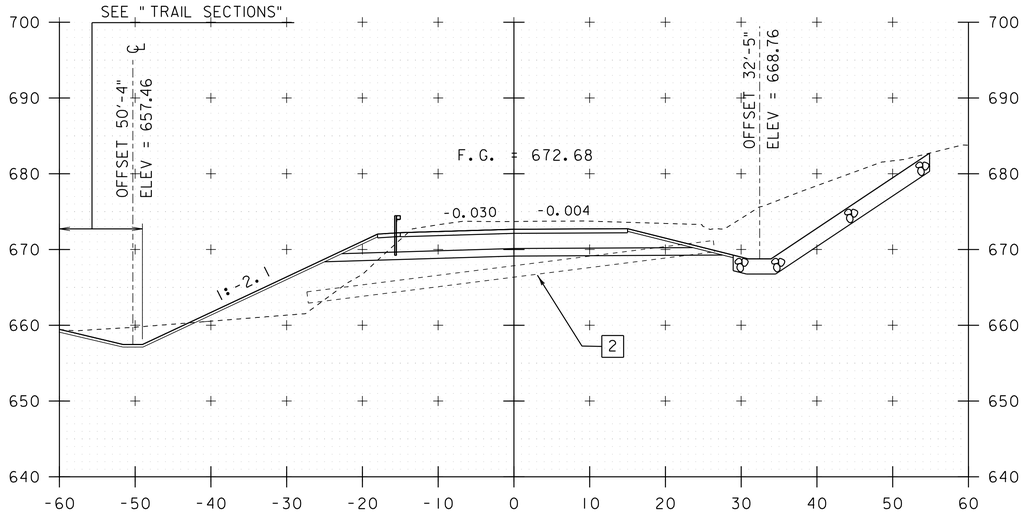

106+00

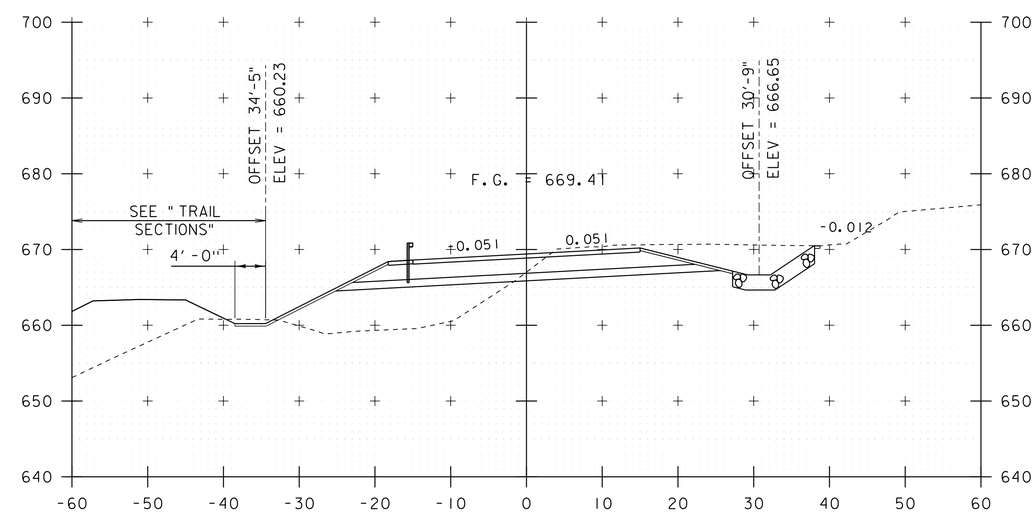

107+00

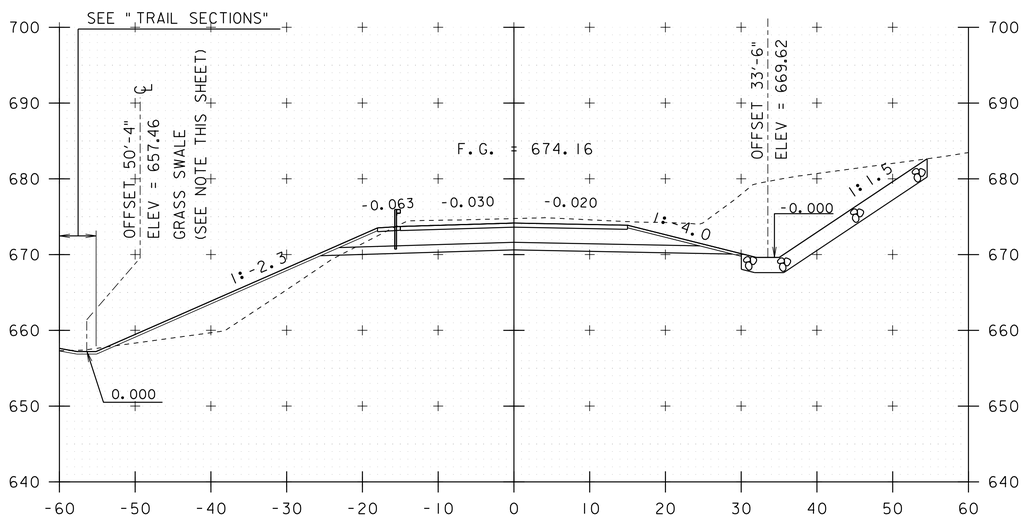

105+50

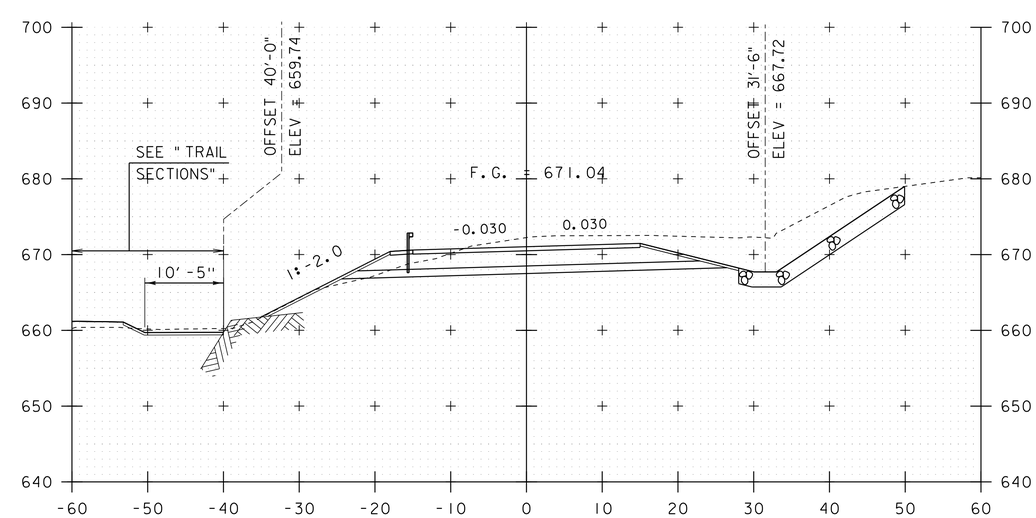

106+50

2 REMOVE EXISTING 18" CGMP
FROM STA. 105+89.51 27'-4" LT
TO STA. 105+87.76 26'-6" RT

NOTE: FOR ADDITIONAL INFORMATION REGARDING THE STORMWATER GRASS TREATMENT SWALE, SEE "GRASS TREATMENT SWALE PLAN" SHEET FOR ALIGNMENT INFORMATION, "GRASS TREATMENT SWALE PROFILE" ON THE , "DRAINAGE SYSTEMS PROFILES" SHEET AND THE "GRASS TREATMENT SWALE SECTIONS" SHEETS.

PROJECT NAME: MORRISTOWN	
PROJECT NUMBER: BRO 0240(3)S	
FILE NAME: 78f329xs.dgn	PLOT DATE: 16-NOV-2015
PROJECT LEADER: C. CARLSON	DRAWN BY: G. ROKES
DESIGNED BY: N. VANDENBERG	CHECKED BY: J. LACROIX
VT-15A SECTIONS SHEET 3	SHEET 87 OF 148

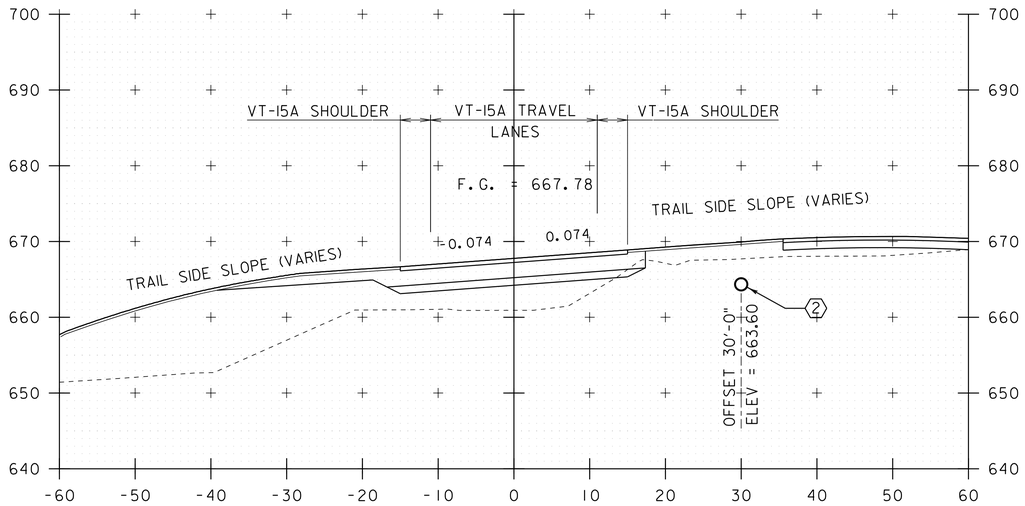

107+50

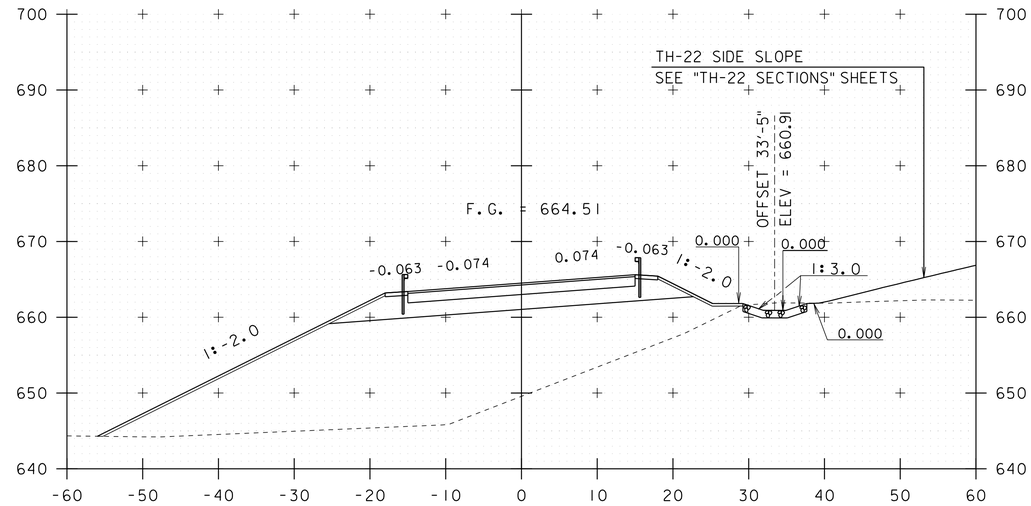

108+50

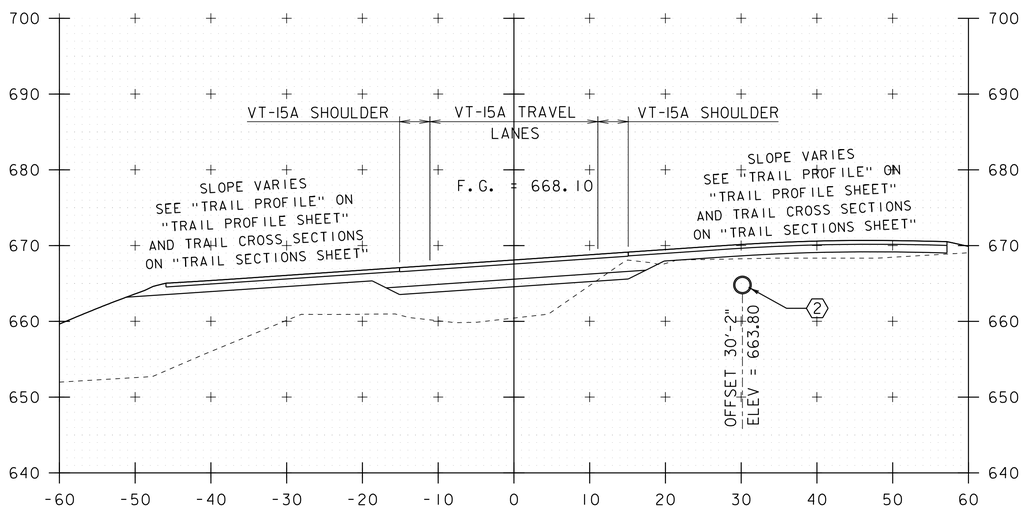

107+40
INTERSECTION VT-15A AND
RAIL CROSSING STA. 55+59.67 (SKEWED)

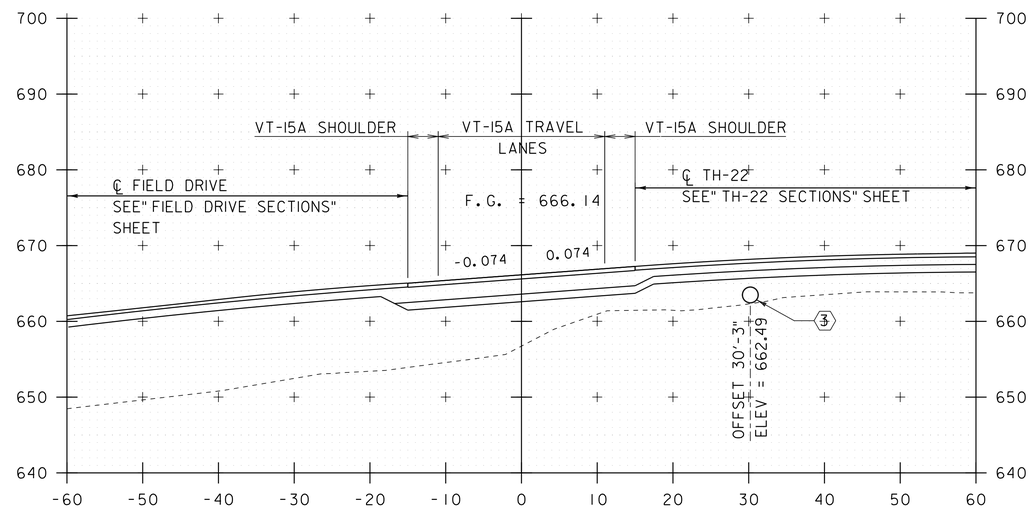

108+00
VT-15A INTERSECTION WITH
FIELD DRIVE STA. 10+00.00 LT
AND TH-22 20+00.00 RT

(1) NEW 24 INCH DIA. PIPE
SEE "TH-22 AND TRAIL DRAINAGE PROFILE"
ON THE "DRAINAGE SYSTEMS PROFILE" SHEET

(3) NEW 24 INCH DIA. PIPE
SEE "TH-22 AND TRAIL DRAINAGE PROFILE"
ON THE "DRAINAGE SYSTEMS PROFILE" SHEET

PROJECT NAME: MORRISTOWN	
PROJECT NUMBER: BRO 0240(3)S	
FILE NAME: 78f329xs.dgn	PLOT DATE: 16-NOV-2015
PROJECT LEADER: C. CARLSON	DRAWN BY: G. ROKES
DESIGNED BY: N. VANDENBERG	CHECKED BY: J. LACROIX
VT-15A SECTIONS SHEET 4	SHEET 88 OF 148

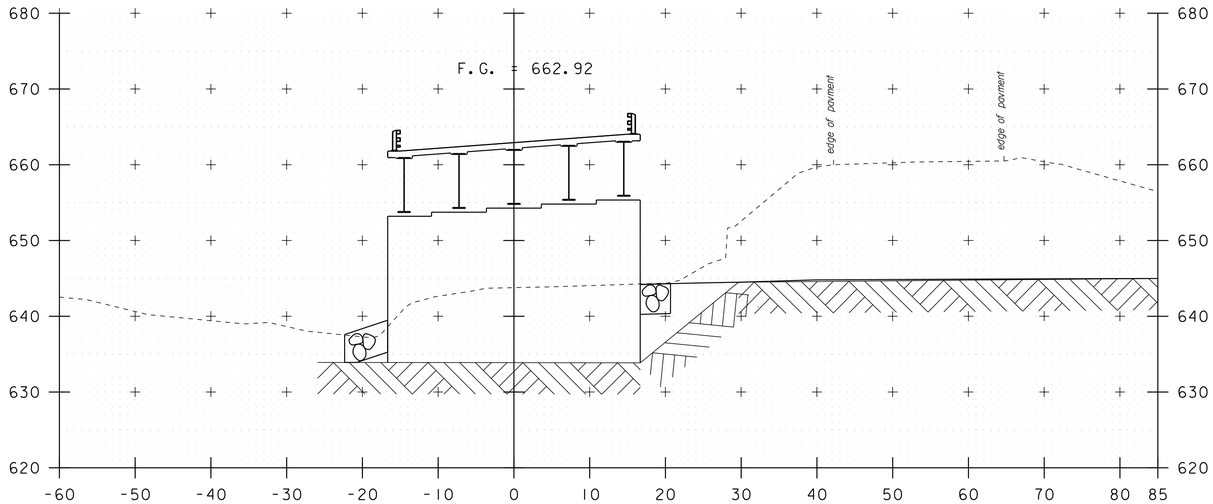

109+00
PIER #1

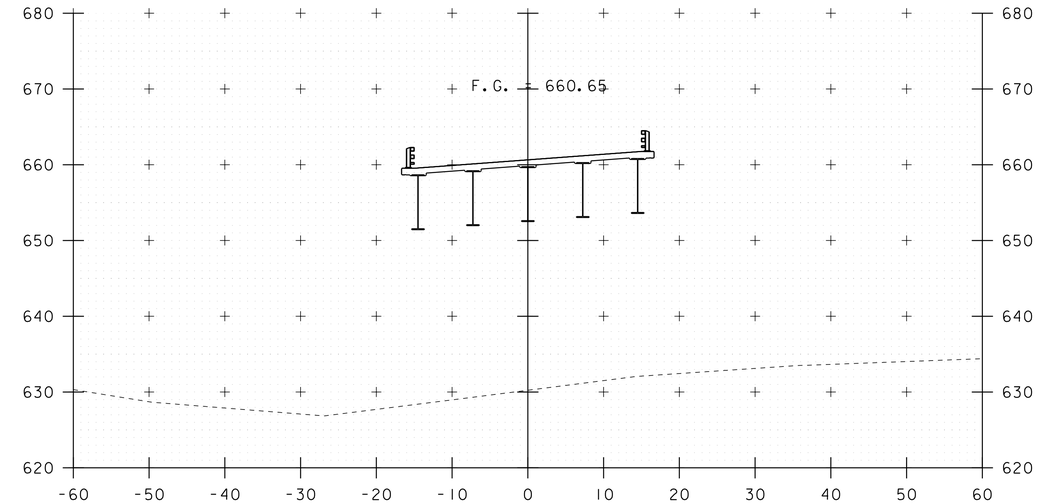

110+00

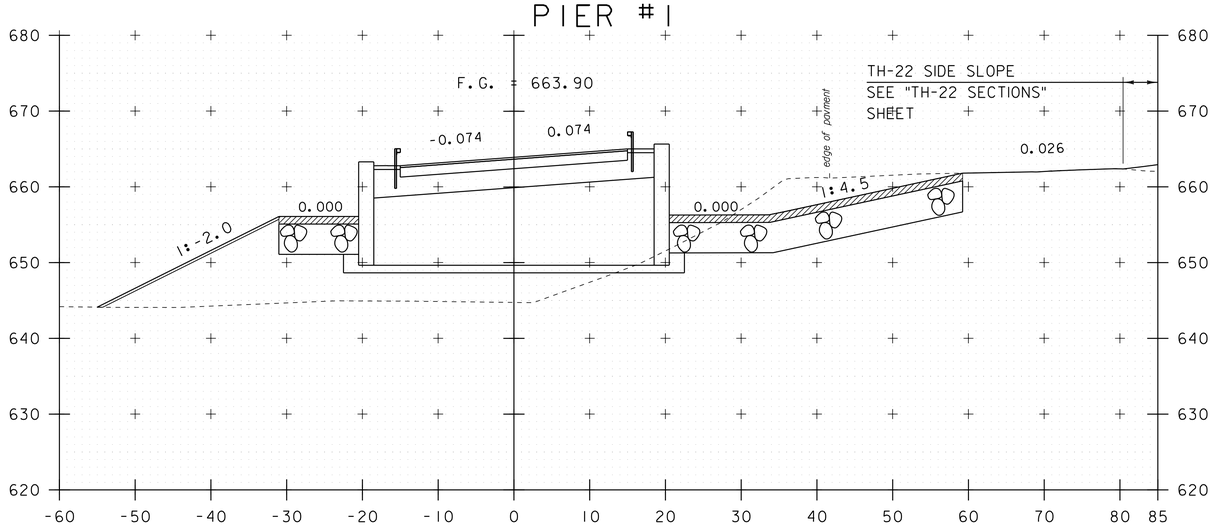

108+68.67
BEGIN BRIDGE

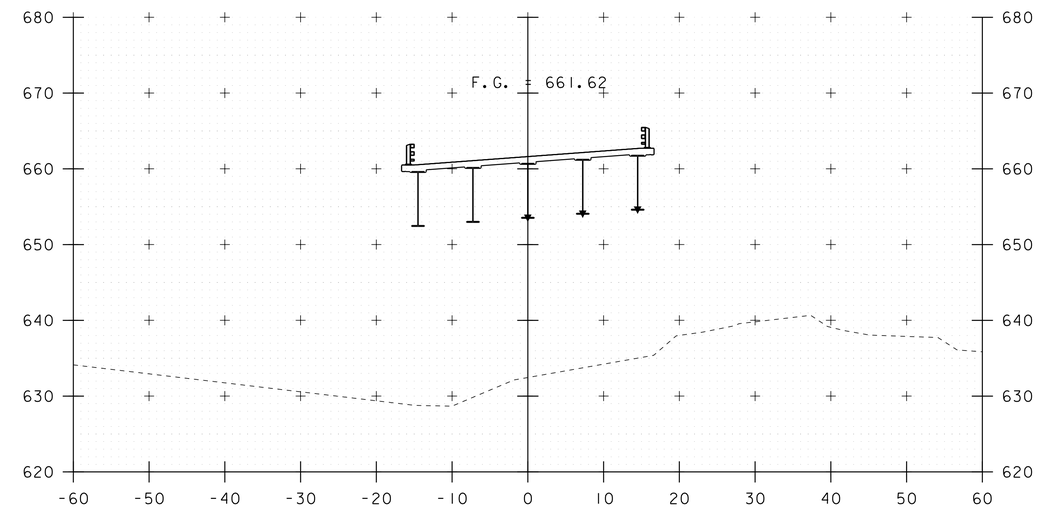

109+50

PROJECT NAME: MORRISTOWN	
PROJECT NUMBER: BRO 0240(3)S	
FILE NAME: 78f329xs.dgn	PLOT DATE: 16-NOV-2015
PROJECT LEADER: C. CARLSON	DRAWN BY: G. ROKES
DESIGNED BY: N. VANDENBERG	CHECKED BY: J. LACROIX
VT-15A SECTIONS SHEET 5	SHEET 89 OF 148

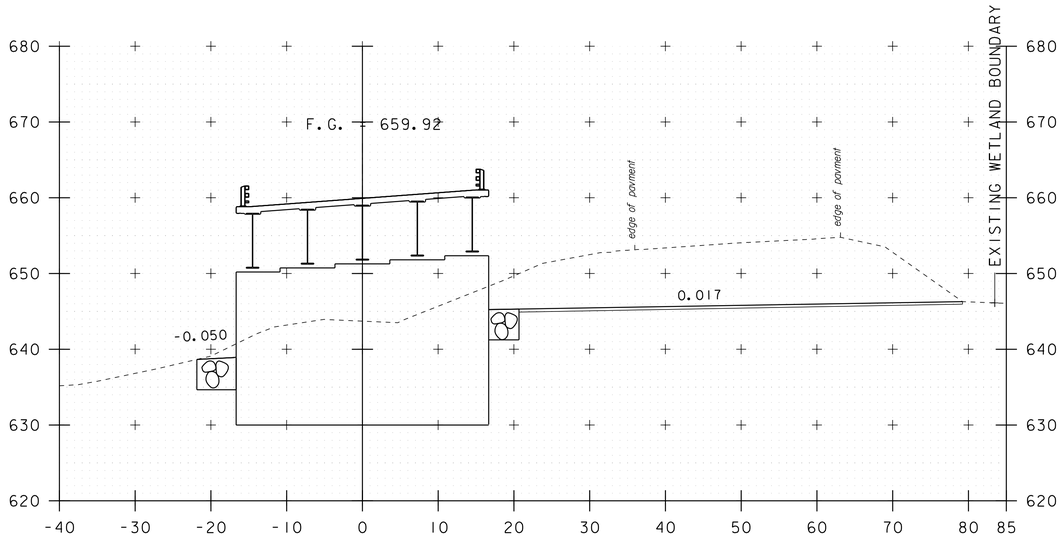

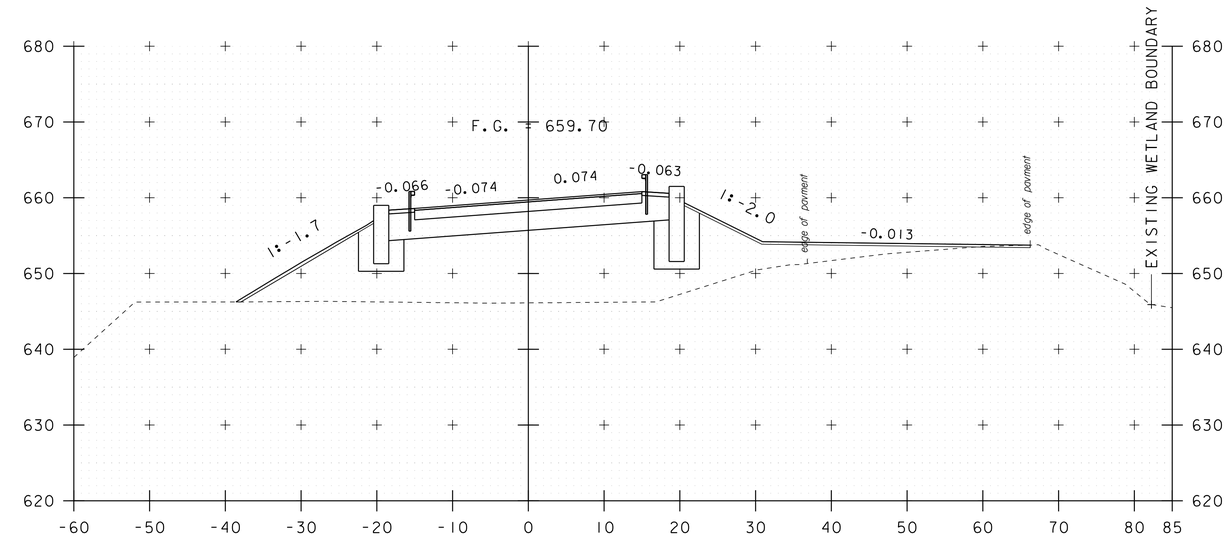

110+60
PIER #2

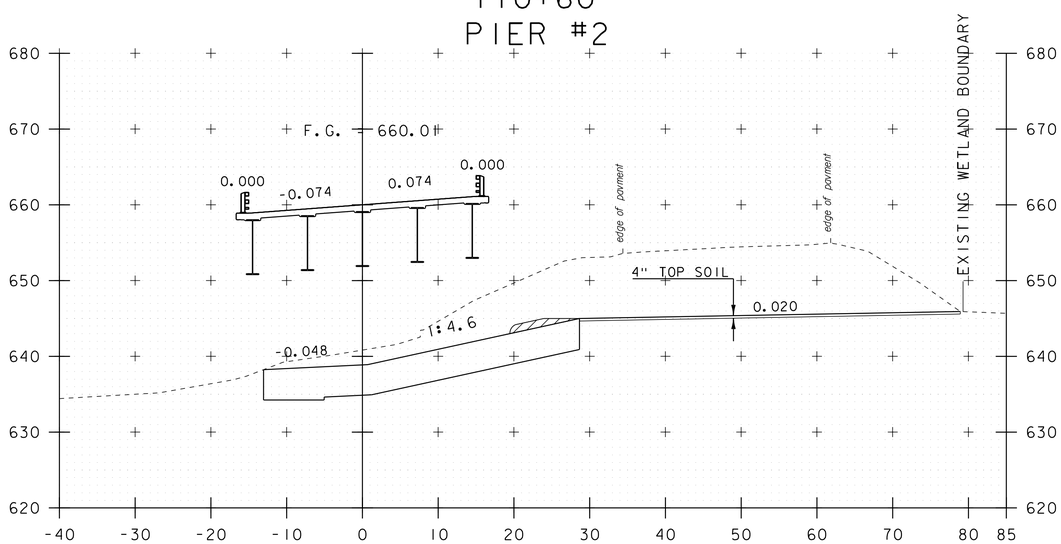

110+50

111+00

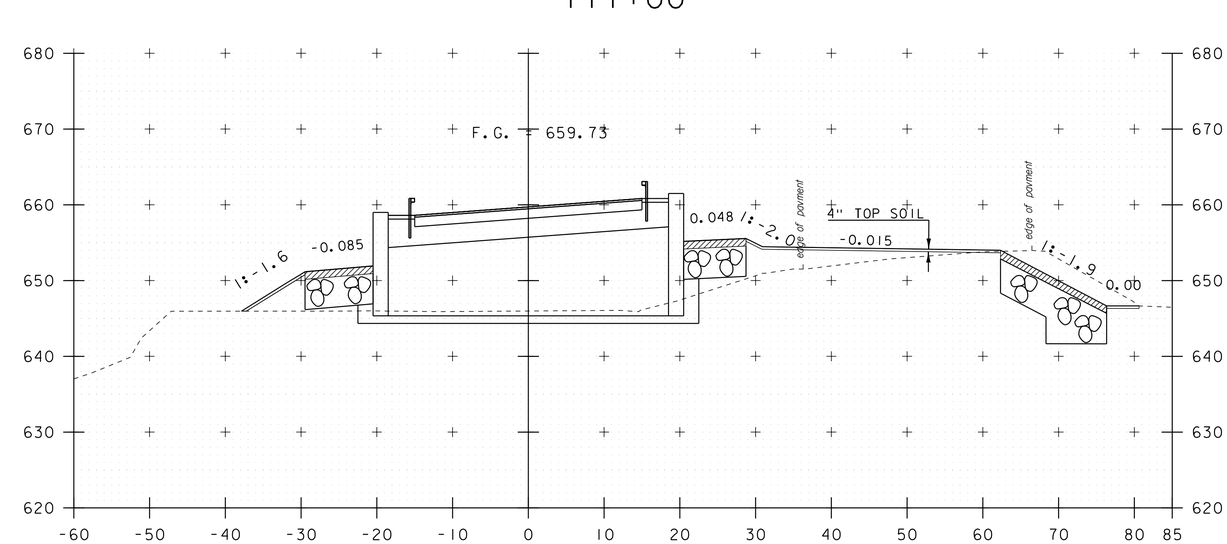

110+91.33
END BRIDGE

PROJECT NAME: MORRISTOWN	
PROJECT NUMBER: BRO 0240(3)S	
FILE NAME: 78f329xs.dgn	PLOT DATE: 16-NOV-2015
PROJECT LEADER: C. CARLSON	DRAWN BY: G. ROKES
DESIGNED BY: N. VANDENBERG	CHECKED BY: J. LACROIX
VT-15A SECTIONS SHEET 6	SHEET 90 OF 148

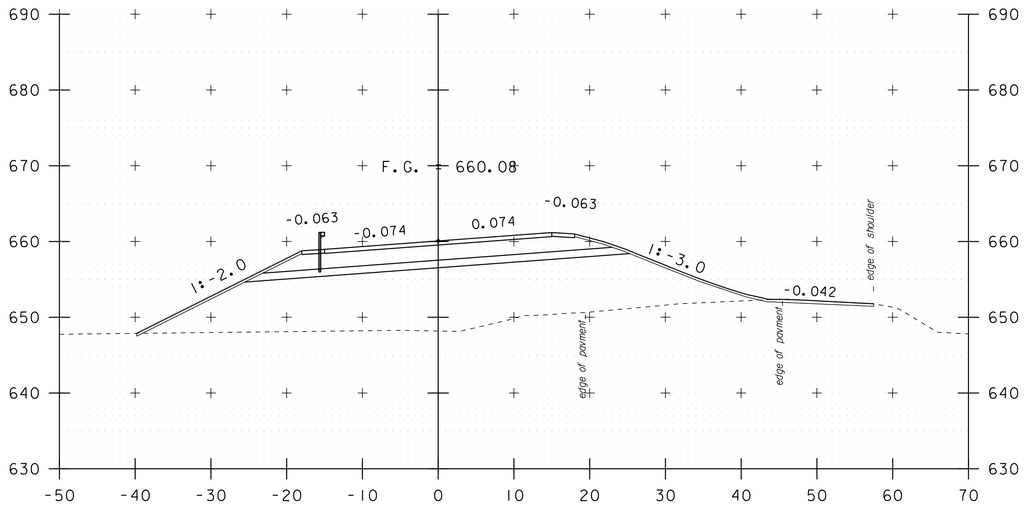

112+00

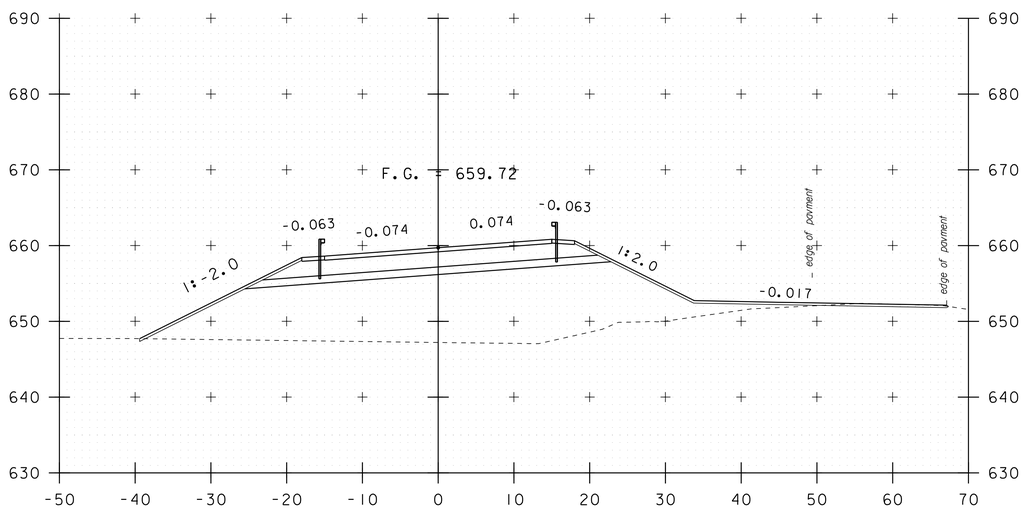

111+50

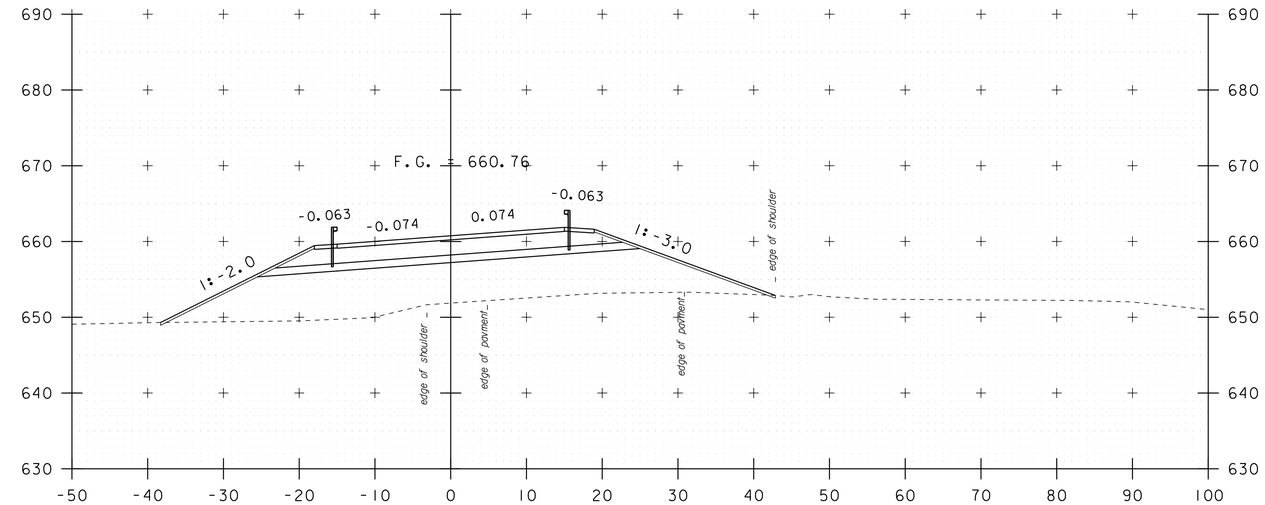

112+50

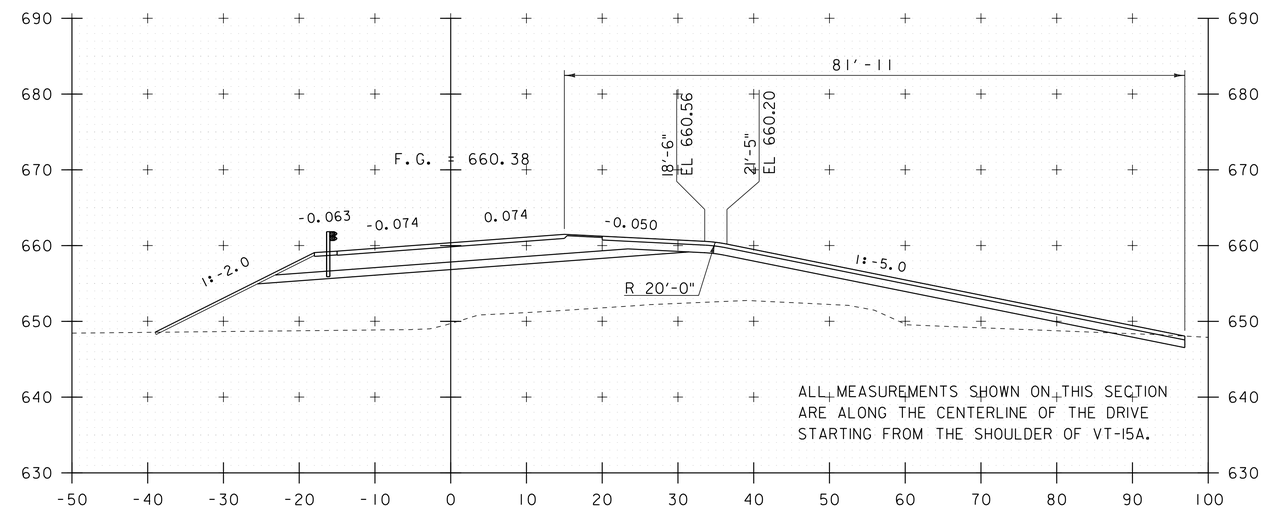

112+25

FIELD DRIVE RT

PROJECT NAME: MORRISTOWN	
PROJECT NUMBER: BRO 0240(3)S	
FILE NAME: 78f329xs.dgn	PLOT DATE: 16-NOV-2015
PROJECT LEADER: C. CARLSON	DRAWN BY: G. ROKES
DESIGNED BY: N. VANDENBERG	CHECKED BY: J. LACROIX
VT-15A SECTIONS SHEET 7	SHEET 91 OF 148

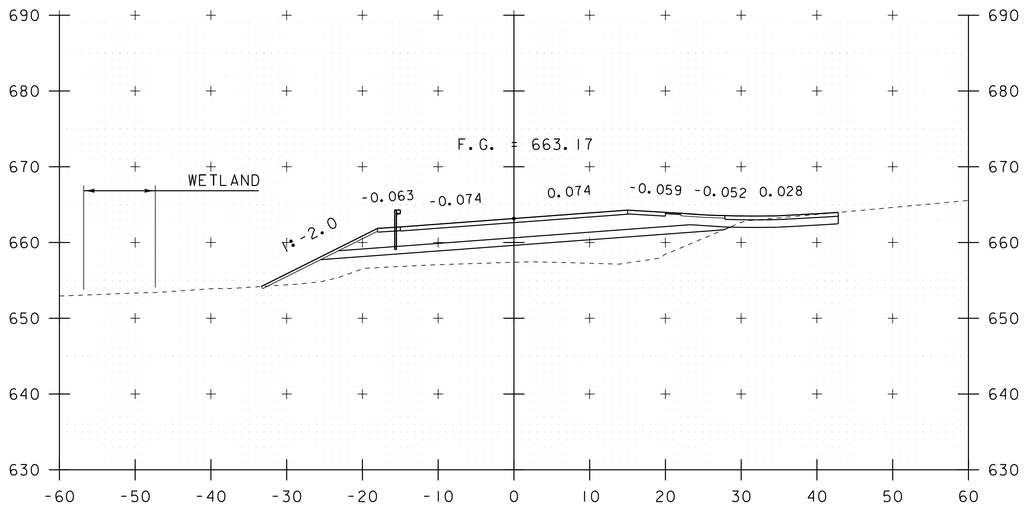

113+50

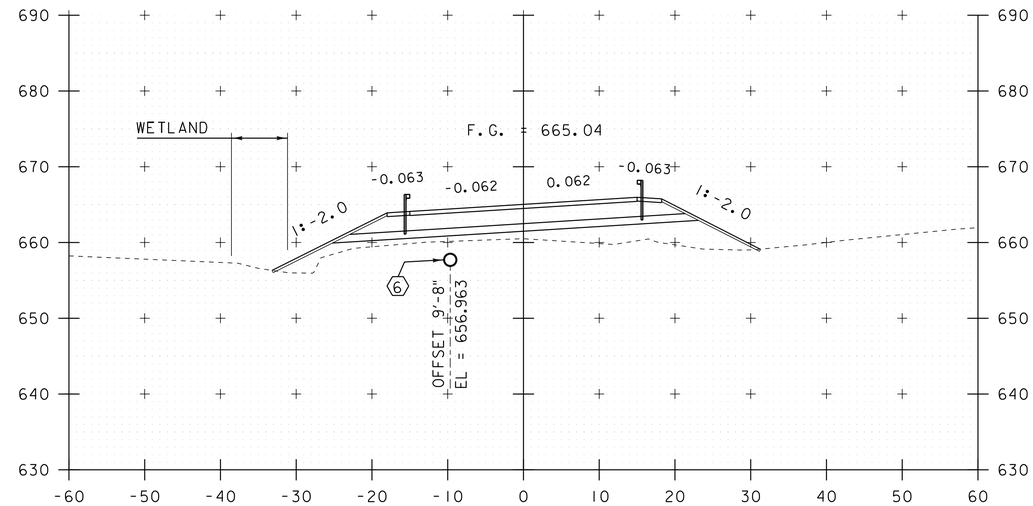

114+00

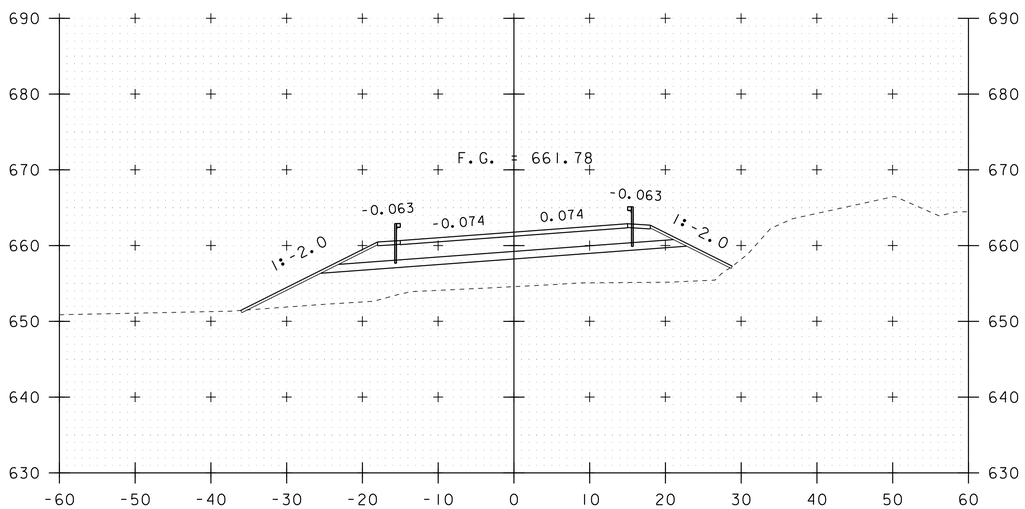

113+00

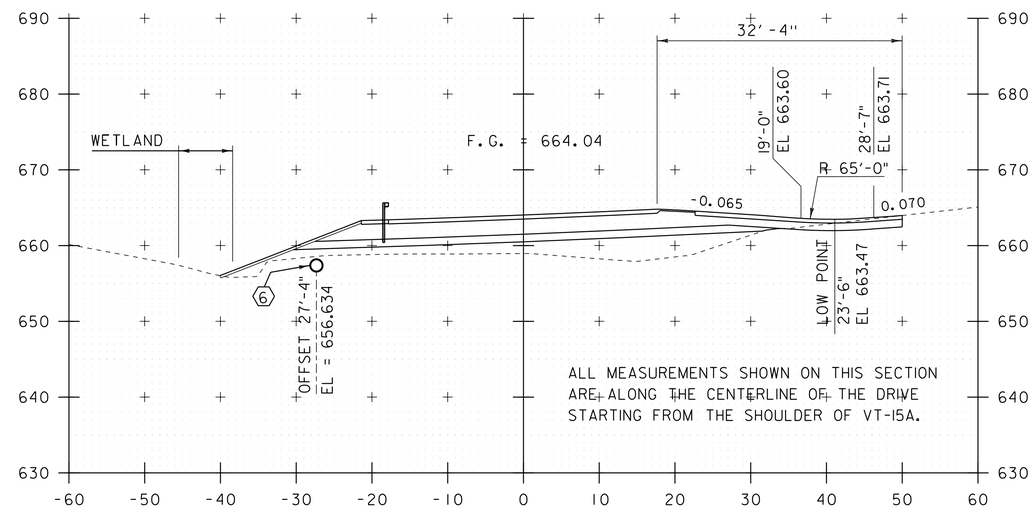

113+75

SKEWED FIELD DRIVE RT

6 NEW 18 INCH DIA. PIPE LENGTH 76'-10"
WITH 2 EA END SECTIONS

PROJECT NAME: MORRISTOWN	
PROJECT NUMBER: BRO 0240(3)S	
FILE NAME: 78f329xs.dgn	PLOT DATE: 16-NOV-2015
PROJECT LEADER: C. CARLSON	DRAWN BY: G. ROKES
DESIGNED BY: N. VANDENBERG	CHECKED BY: J. LACROIX
VT-15A SECTIONS SHEET 8	SHEET 92 OF 148

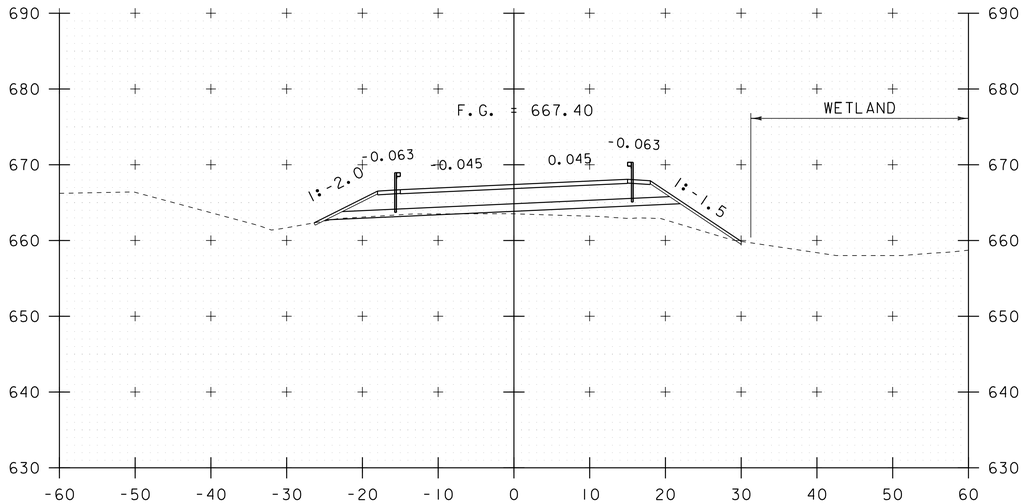

114+50

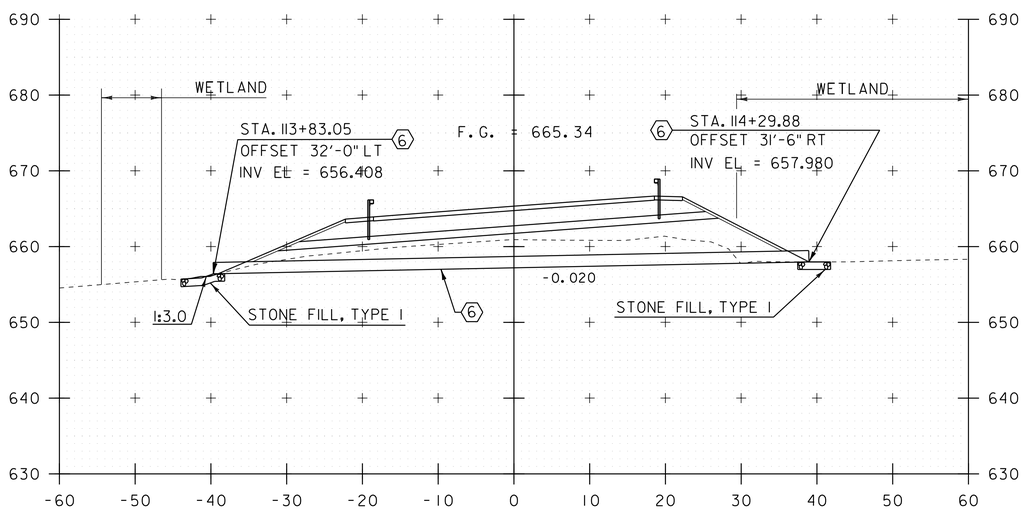

114+07
SKEWED PIPE SECTION

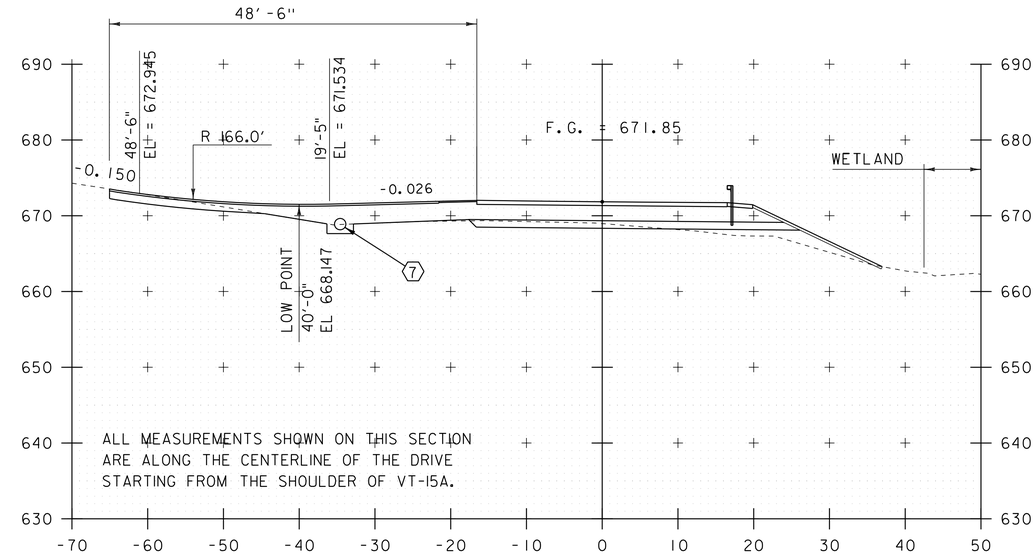

115+25
SKEWED FIELD DRIVE SECTION LT

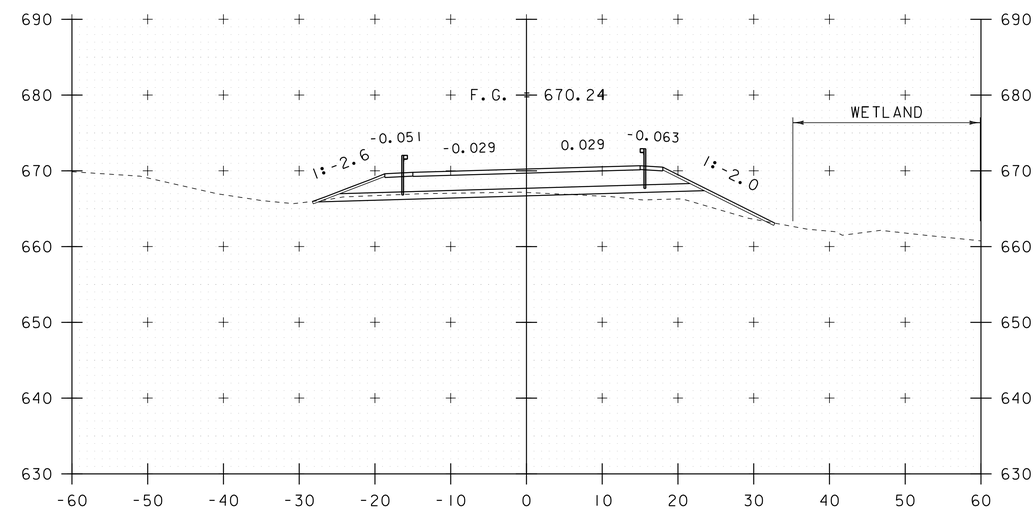

115+00

(6) NEW 18 INCH DIA. PIPE LENGTH 78'-7"

PROJECT NAME: MORRISTOWN	
PROJECT NUMBER: BRO 0240(3)S	
FILE NAME: 78f329xs.dgn	PLOT DATE: 16-NOV-2015
PROJECT LEADER: C. CARLSON	DRAWN BY: G. ROKES
DESIGNED BY: N. VANDENBERG	CHECKED BY: J. LACROIX
VT-15A SECTIONS SHEET 9	SHEET 93 OF 148

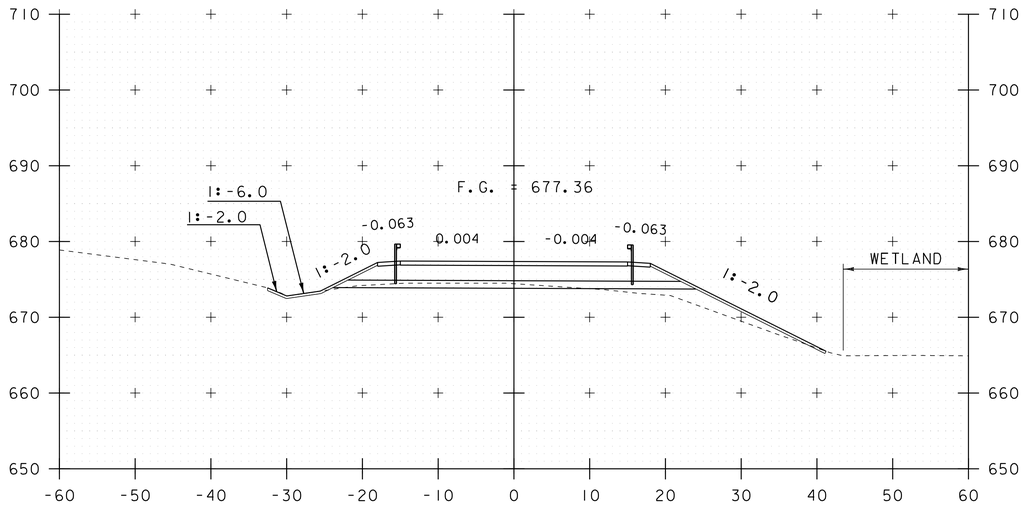

END PROJECT BRO 0240(3)S
BEGIN PROJECT STP HES 030-2(28)
116+00

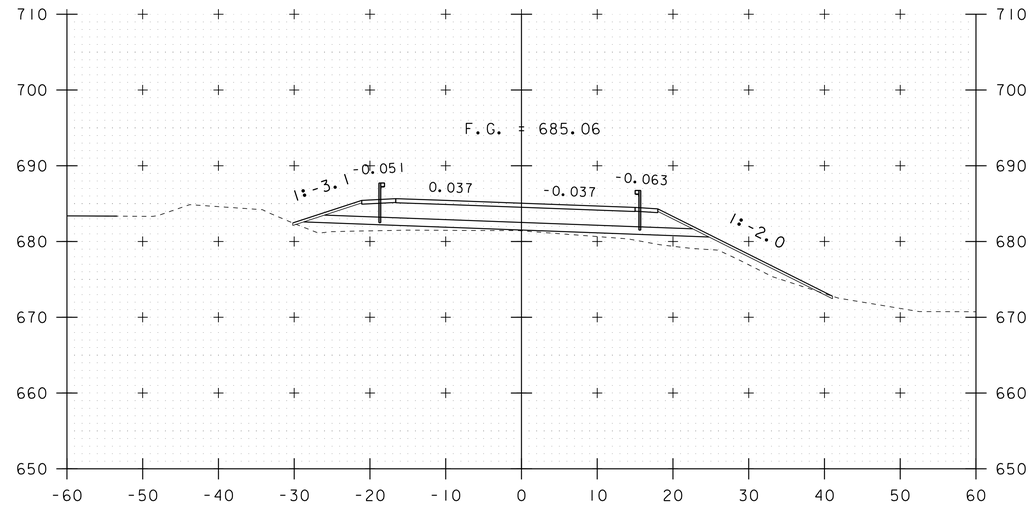

117+00

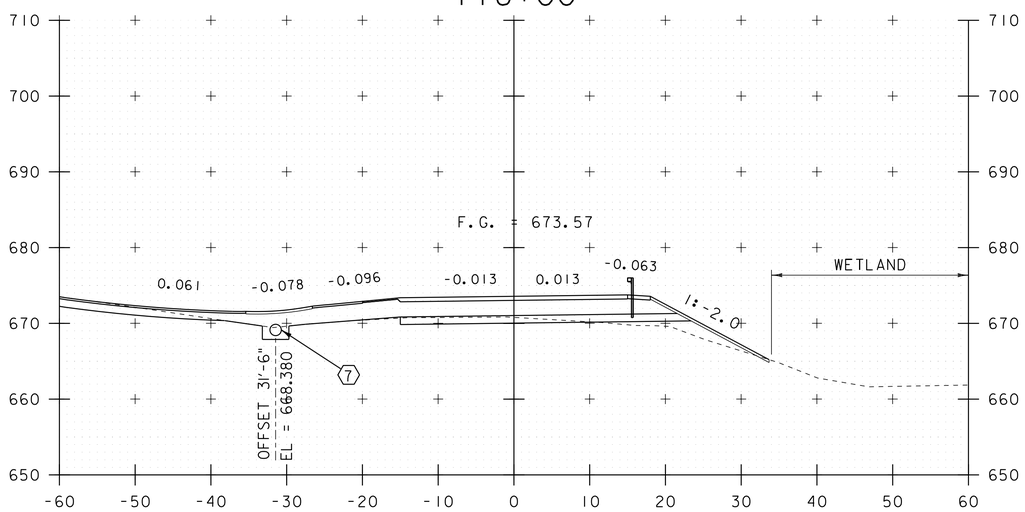

115+50

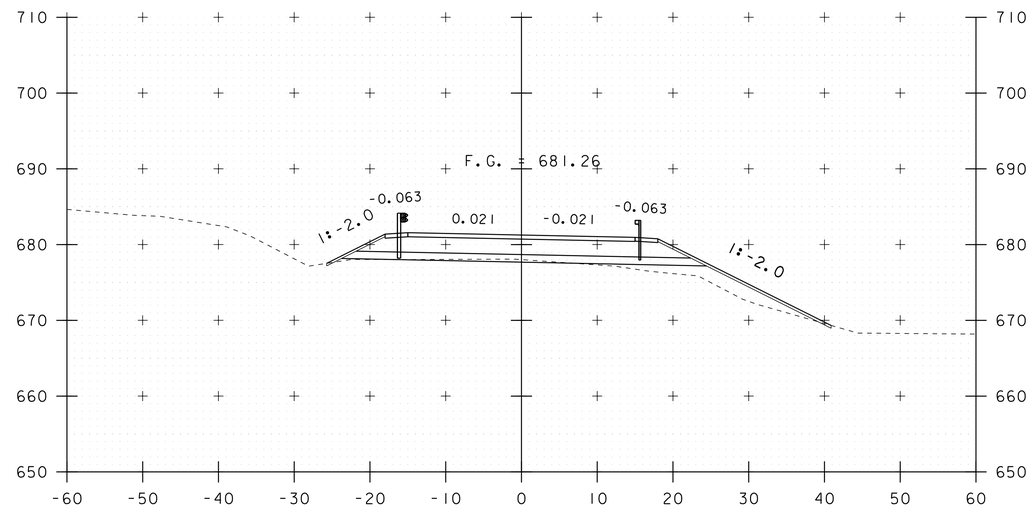

116+50

PROJECT NAME: MORRISTOWN	
PROJECT NUMBER: STP HES 030-2(28)	
FILE NAME: 78f329xs.dgn	PLOT DATE: 16-NOV-2015
PROJECT LEADER: C. CARLSON	DRAWN BY: G. ROKES
DESIGNED BY: N. VANDENBERG	CHECKED BY: J. LACROIX
VT-15A SECTIONS SHEET 10	SHEET 94 OF 148

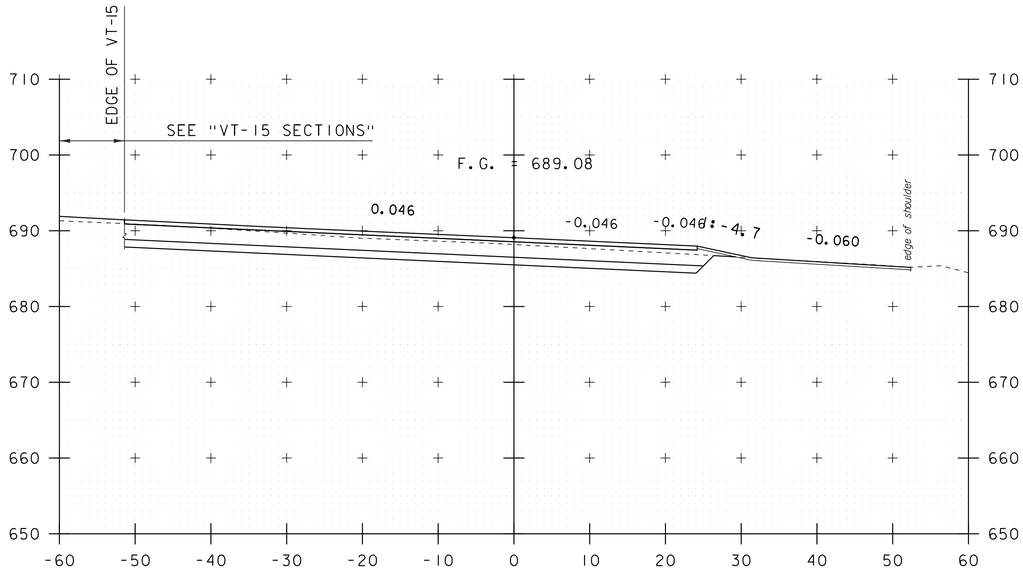

118+00

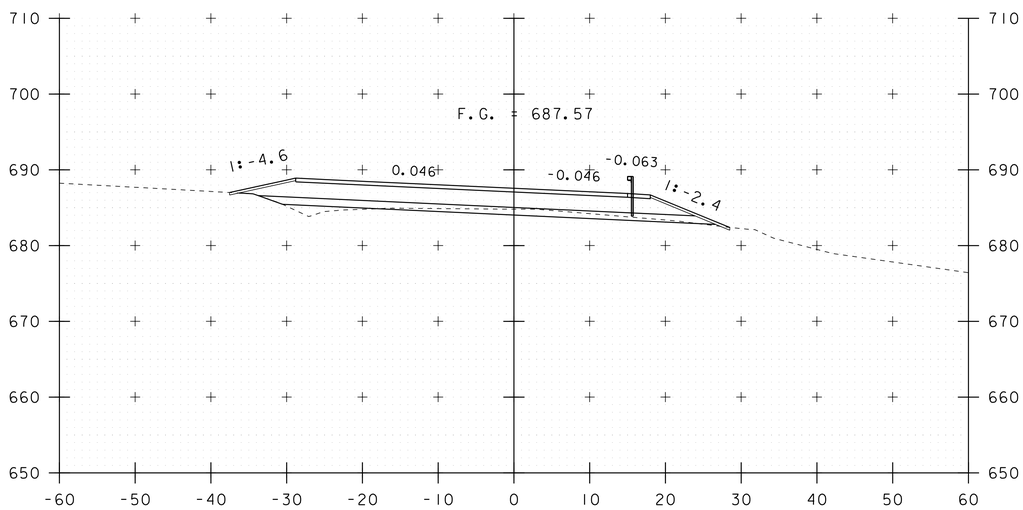

117+50

STA. 117+50 TO STA. 118+17

PROJECT NAME: MORRISTOWN	
PROJECT NUMBER: STP HES 030-2(28)	
FILE NAME: 78f329xs.dgn	PLOT DATE: 16-NOV-2015
PROJECT LEADER: C. CARLSON	DRAWN BY: G. ROKES
DESIGNED BY: N. VANDENBERG	CHECKED BY: J. LACROIX
VT-15A SECTIONS SHEET II	SHEET 95 OF 148

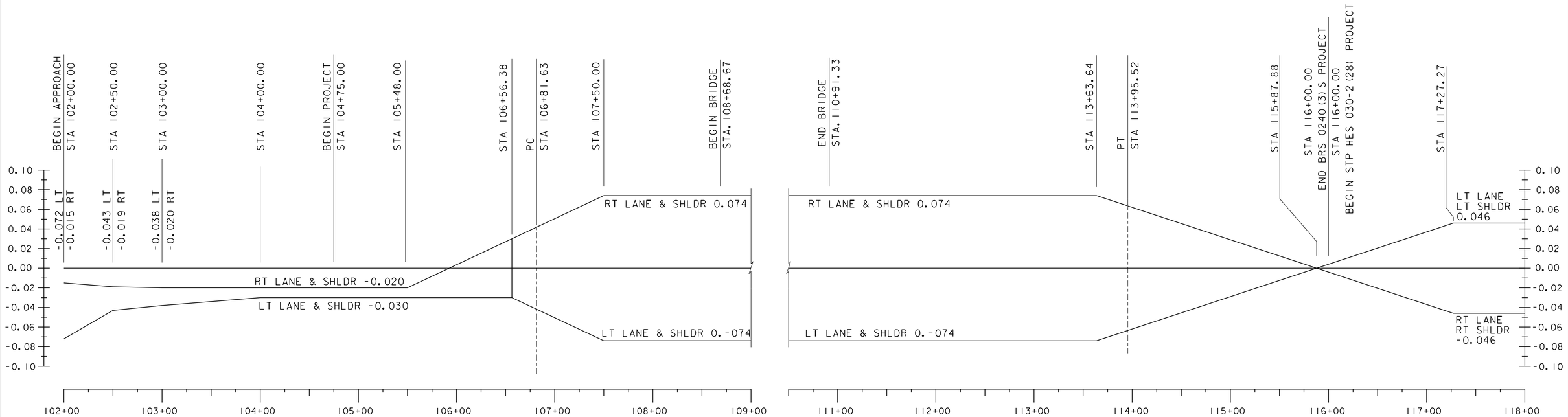

VT-15A BANKING DIAGRAM

VERTICAL SCALE N.T.S.
HORIZONTAL SCALE 1" = 50'-0"

50 0 50

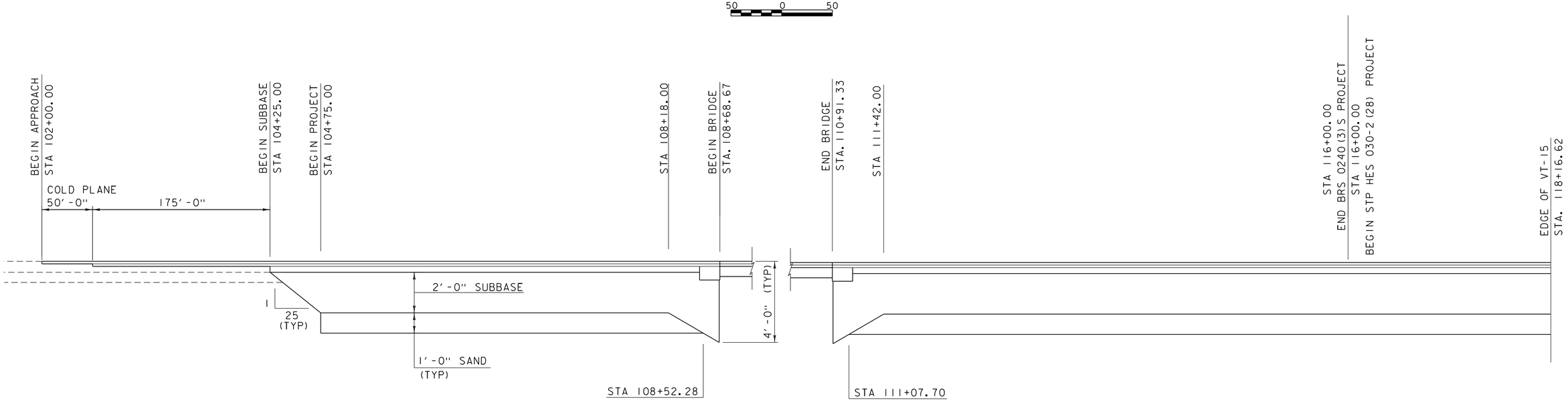

VT-15A MATERIAL TRANSITION DIAGRAM

VERTICAL SCALE N.T.S.
HORIZONTAL SCALE 1" = 50'-0"

50 0 50

SEE "VTA-15 ROAD TYPICAL" FOR MATERIAL DEPTH AND TYPE

PROJECT NAME: MORRISTOWN	
PROJECT NUMBER: BRS 0240(3)S	
FILE NAME: s78f329bnkmat.dgn	PLOT DATE: 16-NOV-2015
PROJECT LEADER: C. CARLSON	DRAWN BY:
DESIGNED BY: J. GRIFFIN	CHECKED BY: J. LACROIX
VT-15A BANKING & MATERIAL TRANSITION	SHEET 96 OF 148

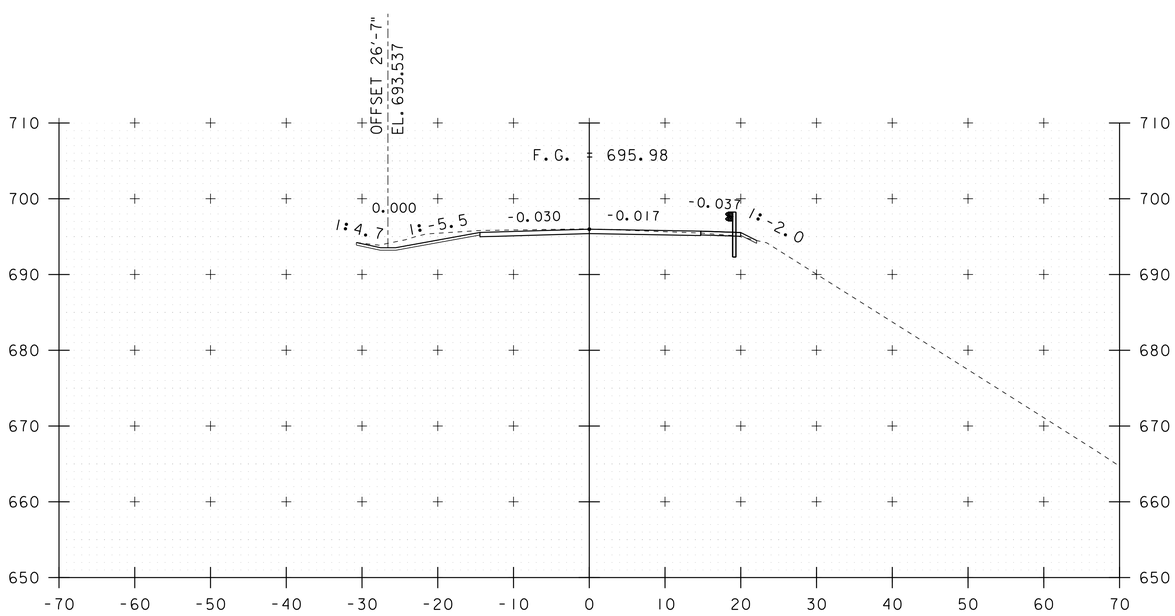

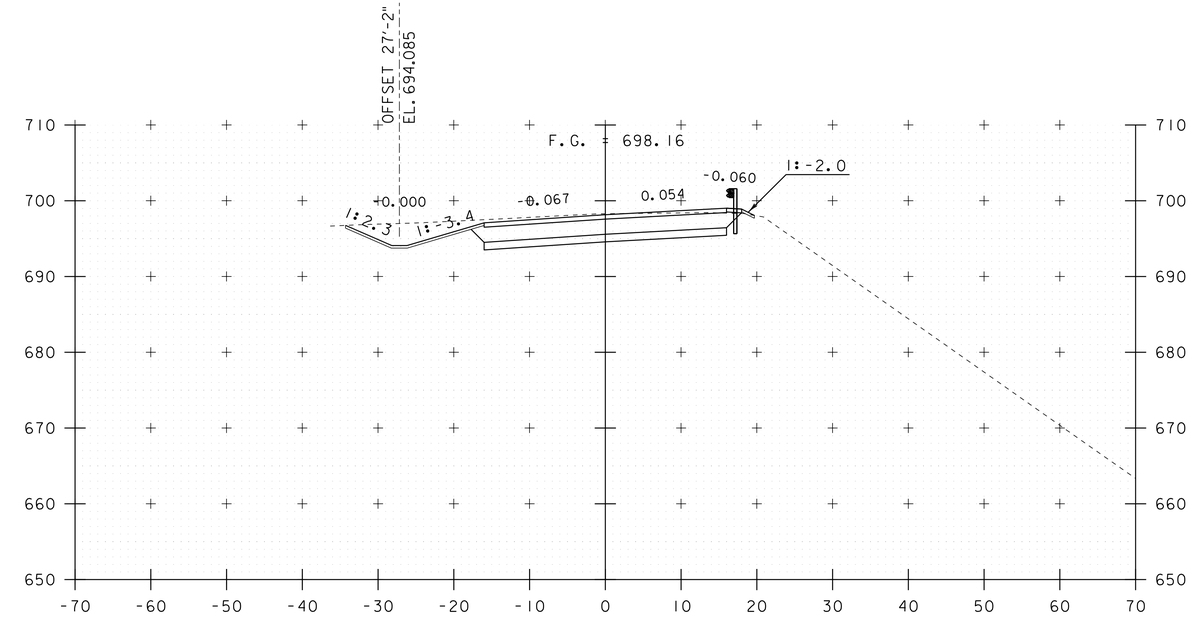

203+50

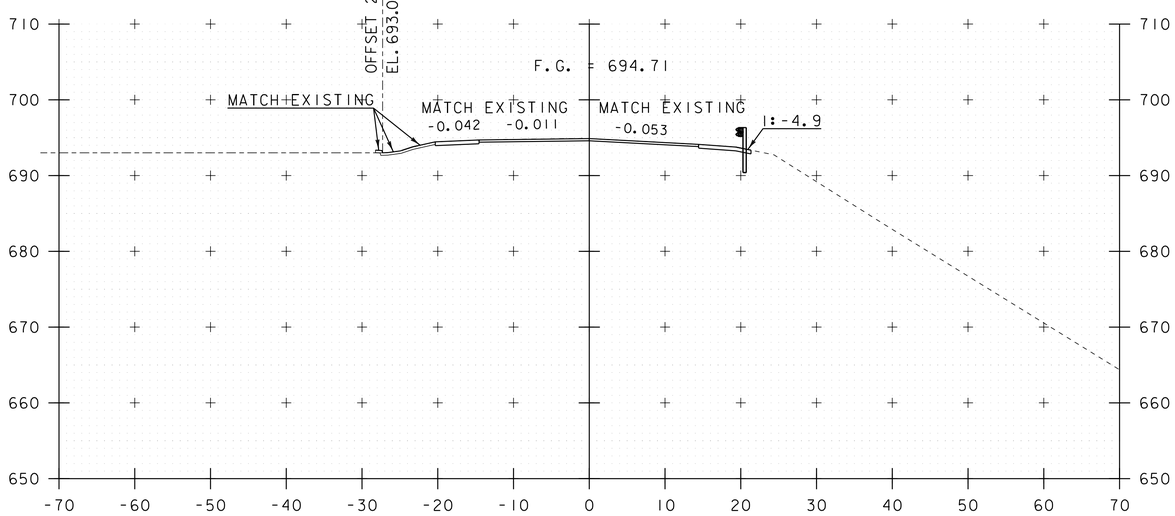

204+50

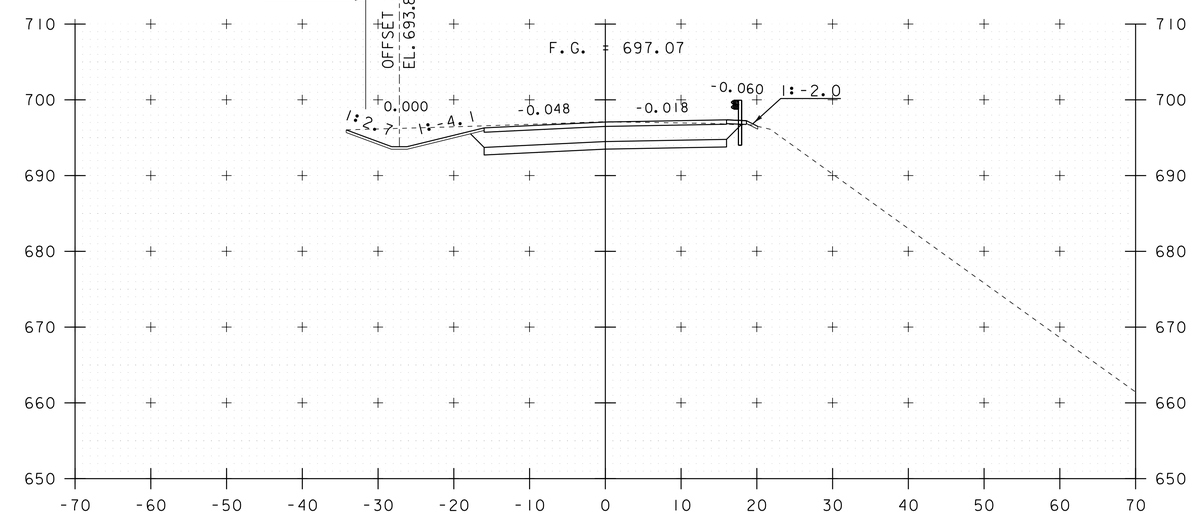

203+00
BEGIN APPROACH

204+00
BEGIN PROJECT

STA. 203+00 TO STA. 204+50

PROJECT NAME: MORRISTOWN	
PROJECT NUMBER: STP HES 030-2(28)	
FILE NAME: 78f329xs.dgn	PLOT DATE: 16-NOV-2015
PROJECT LEADER: C. CARLSON	DRAWN BY: G. ROKES
DESIGNED BY: N. VANDENBERG	CHECKED BY: J. LACROIX
VT-15 SECTIONS SHEET 1	SHEET 97 OF 148

(11) NEW UNDERDRAIN CARRIER PIPE (6 INCHES)

(12) NEW UNDERDRAIN PIPE (6 INCHES)

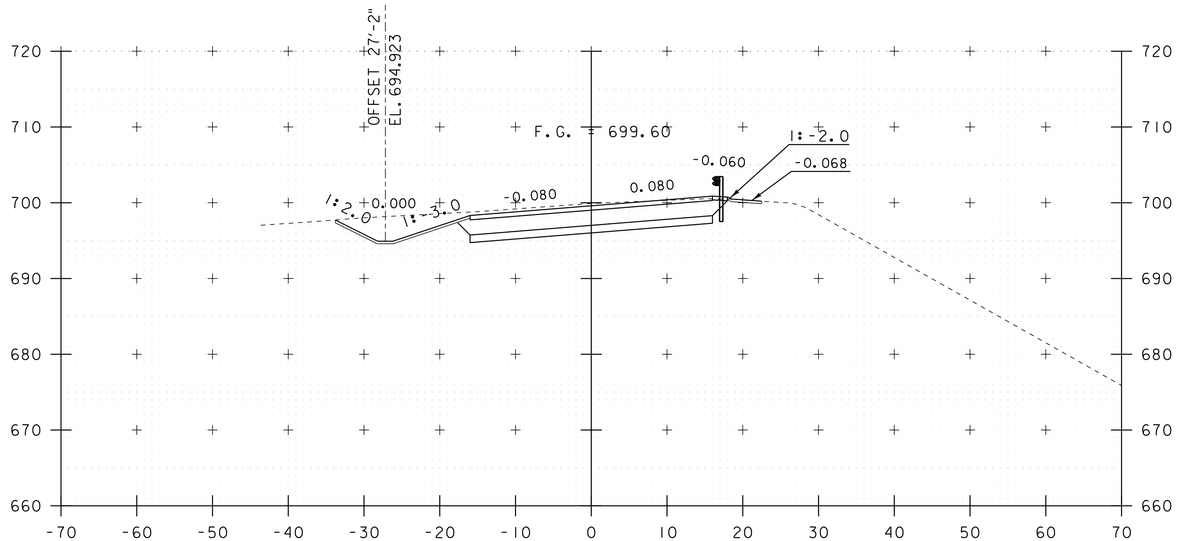

205+50

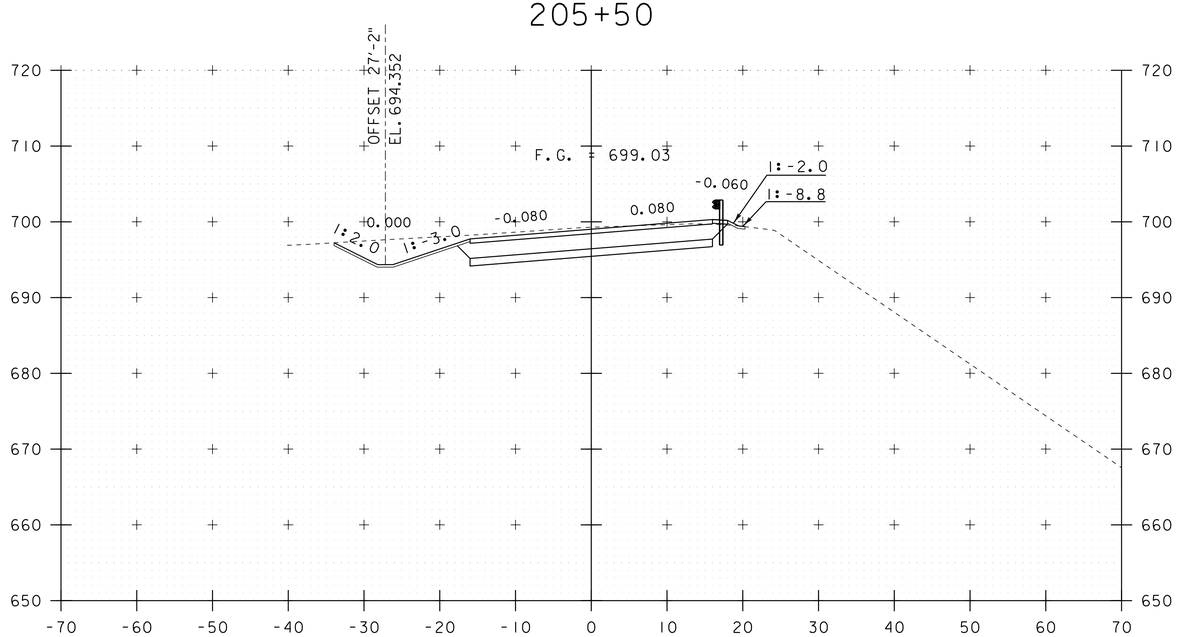

205+00

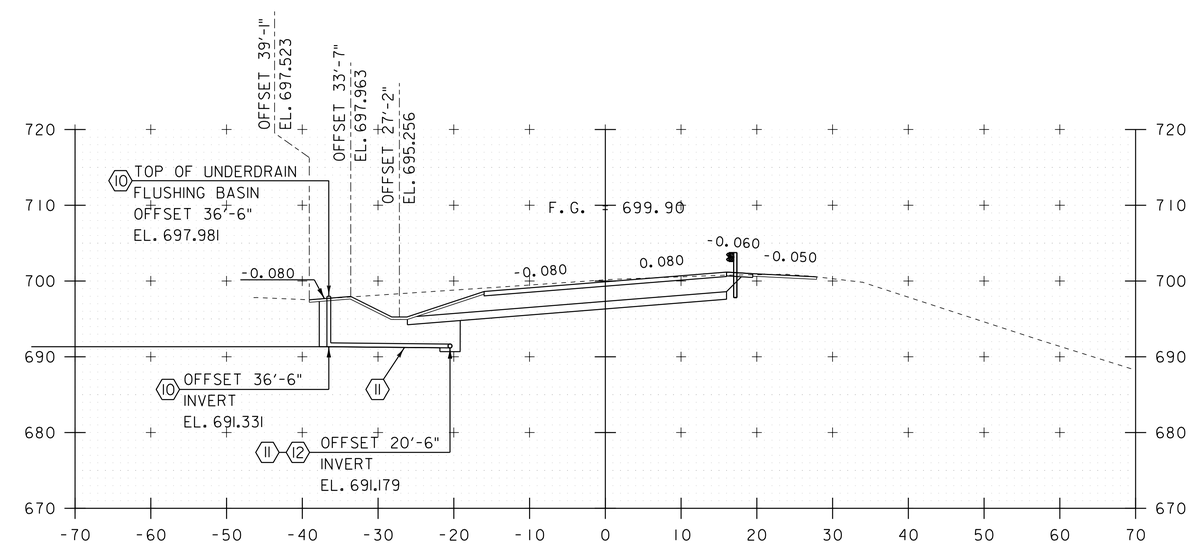

206+25

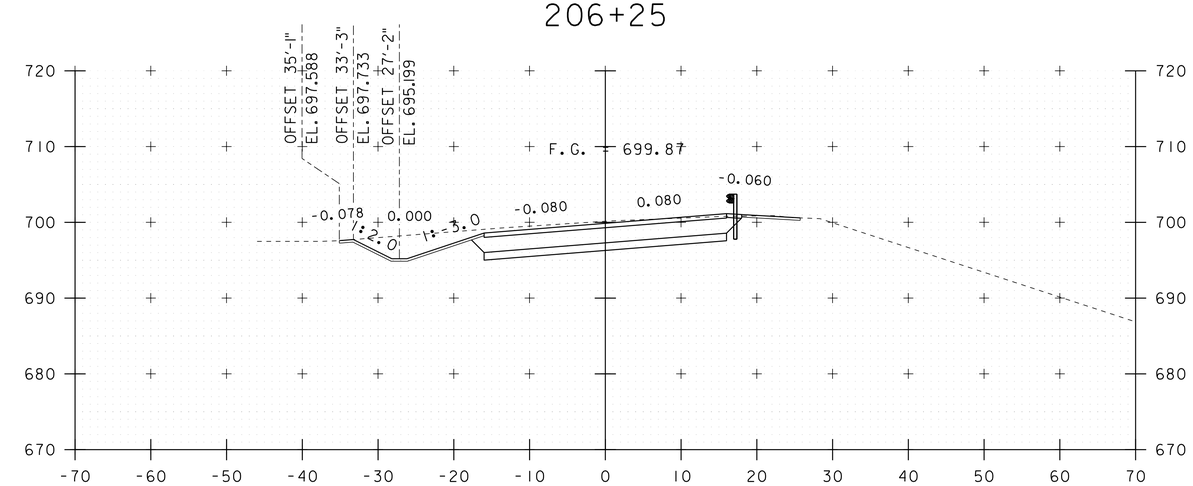

206+00

STA. 205+00 TO STA. 206+25

PROJECT NAME: MORRISTOWN	
PROJECT NUMBER: STP HES 030-2(28)	
FILE NAME: 78f329xs.dgn	PLOT DATE: 16-NOV-2015
PROJECT LEADER: C. CARLSON	DRAWN BY: G. ROKES
DESIGNED BY: N. VANDENBERG	CHECKED BY: J. LACROIX
VT-15 SECTIONS SHEET 2	SHEET 98 OF 148

5 RETAIN EXISTING 30" RCP REINFORCED CONCRETE PIPE

8 NEW 30 INCH DIA. CPEP/CAAP/PCCSP PIPE

11 NEW UNDERDRAIN PIPE (6 INCHES)

MH-2 NEW 48 INCH DIA. PRECAST REINFORCED CONCRETE CATCH BASIN
STA. 207+12.30 39'-5" LT

FOR ADDITIONAL INFORMATION ABOUT THIS AREA
SEE "VT-15 DRAINAGE PROFILE"
ON "DRAINAGE SYSTEM PROFILES" SHEET

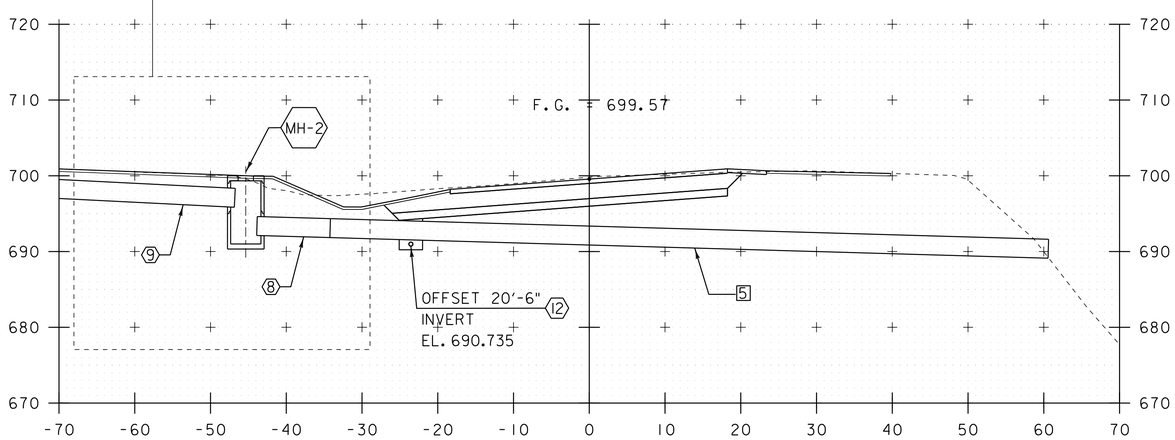

206+96
SWEWED PIPE SECTION

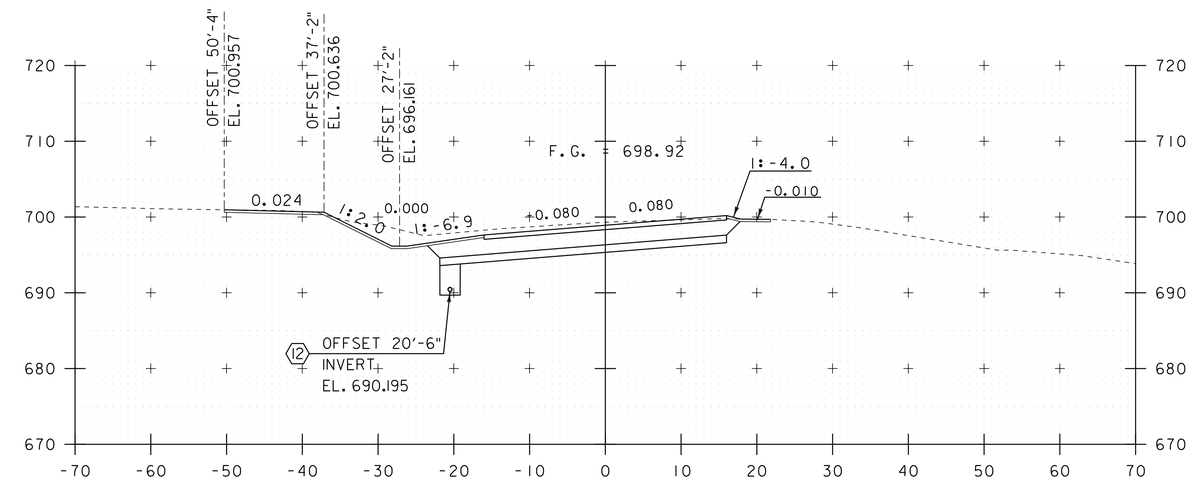

207+50

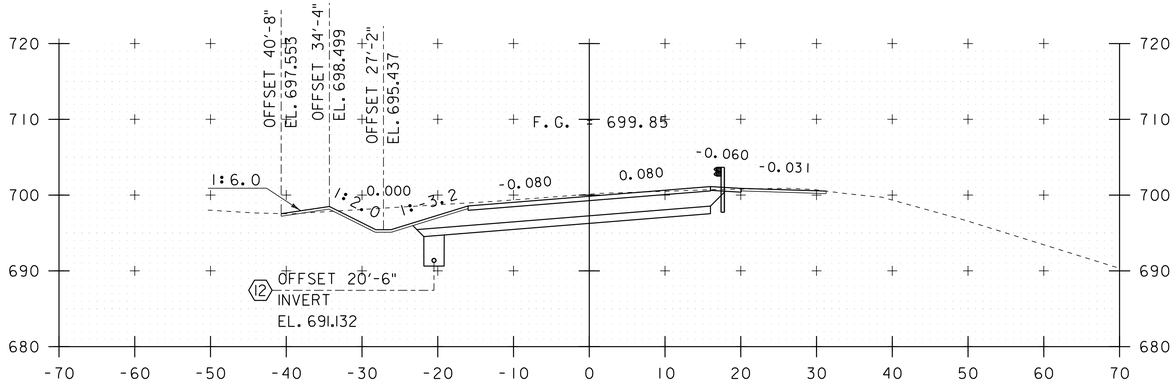

206+50

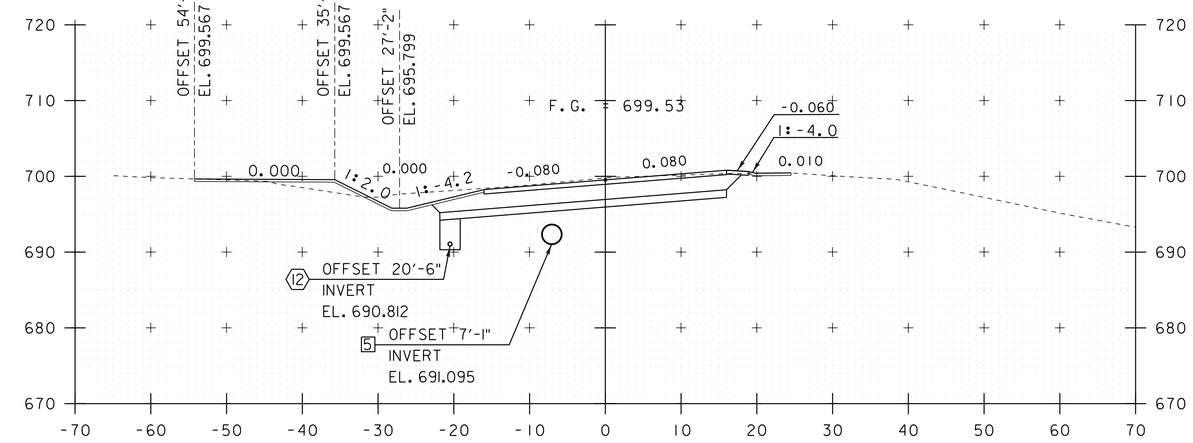

207+00

STA. 206+50 TO STA. 207+50

PROJECT NAME: MORRISTOWN	
PROJECT NUMBER: STP HES 030-2(28)	
FILE NAME: 78f329xs.dgn	PLOT DATE: 16-NOV-2015
PROJECT LEADER: C. CARLSON	DRAWN BY: G. ROKES
DESIGNED BY: N. VANDENBERG	CHECKED BY: J. LACROIX
VT-15 SECTIONS SHEET 3	SHEET 99 OF 148

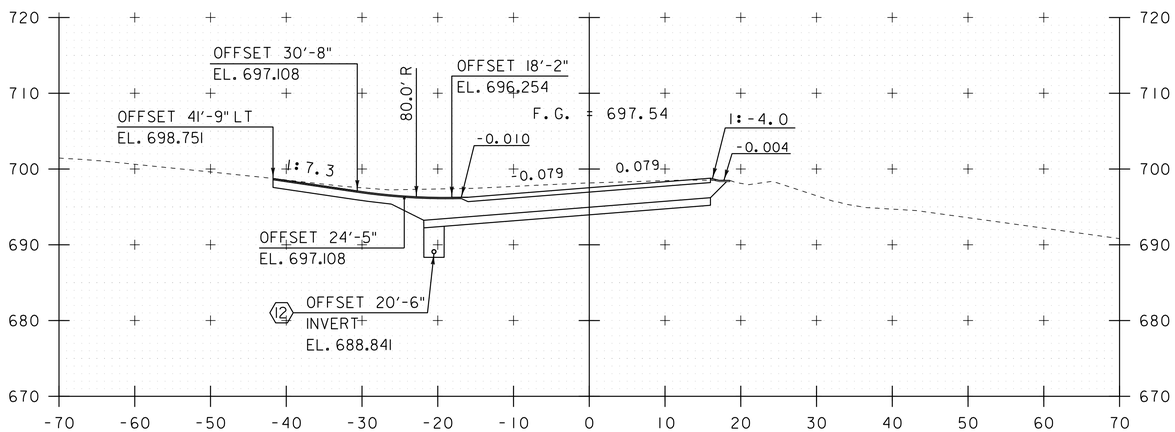

208+21
DRIVE LEFT

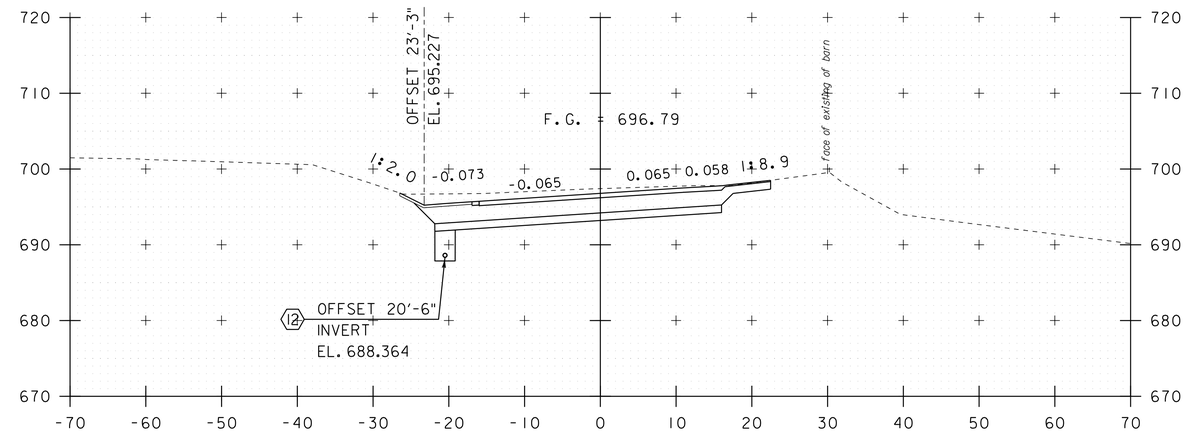

208+50

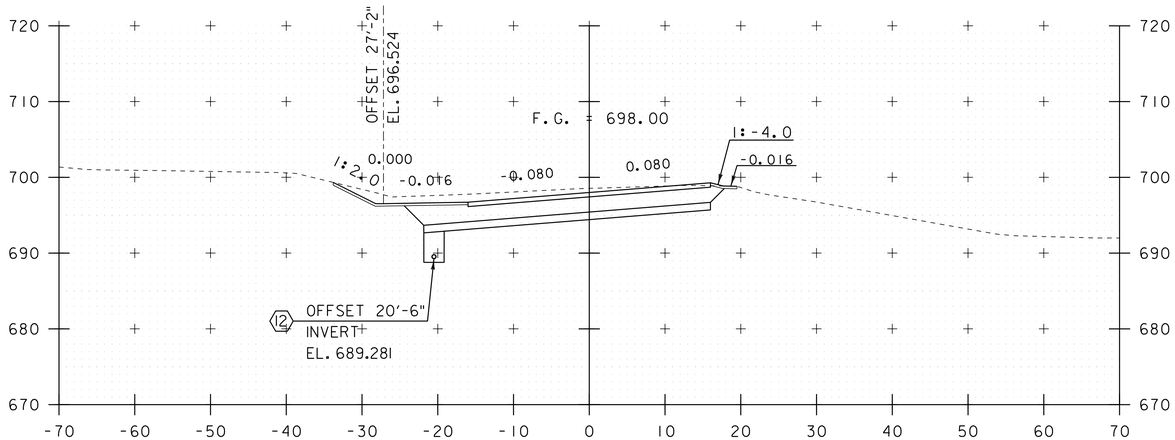

208+00

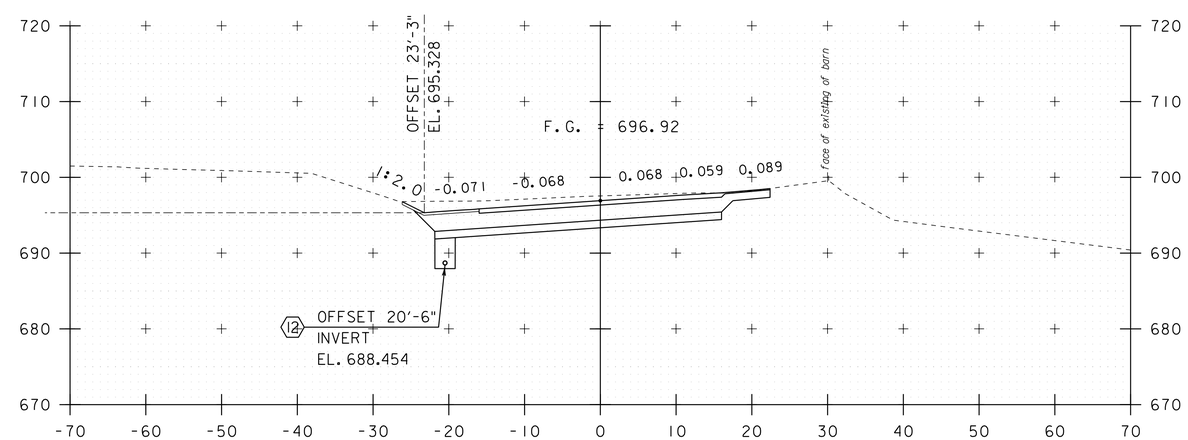

208+45
BARN DRIVE RT

STA. 208+00 TO STA. 208+50

PROJECT NAME: MORRISTOWN	
PROJECT NUMBER: STP HES 030-2(28)	
FILE NAME: 78f329xs.dgn	PLOT DATE: 16-NOV-2015
PROJECT LEADER: C. CARLSON	DRAWN BY: G. ROKES
DESIGNED BY: N. VANDENBERG	CHECKED BY: J. LACROIX
VT-15 SECTIONS SHEET 4	SHEET 100 OF 148

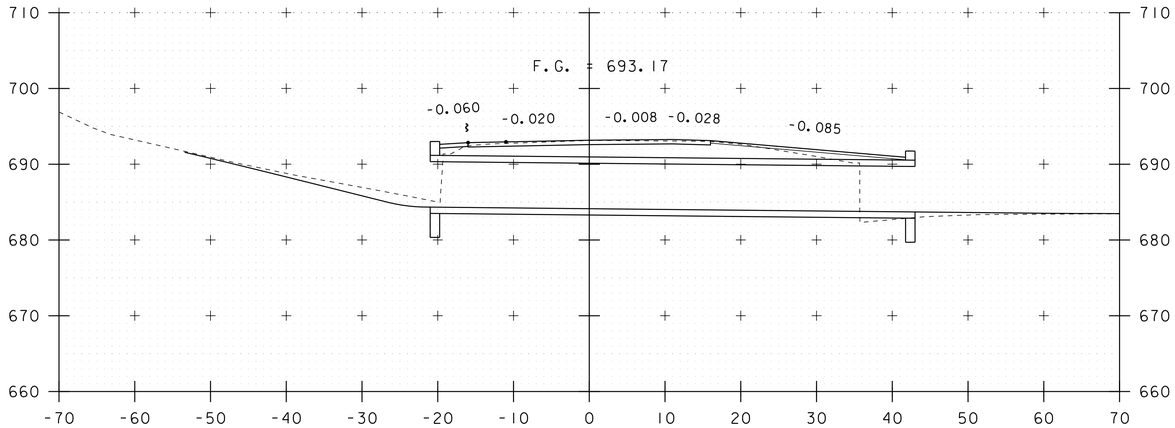

209+75
CATTLE PASS

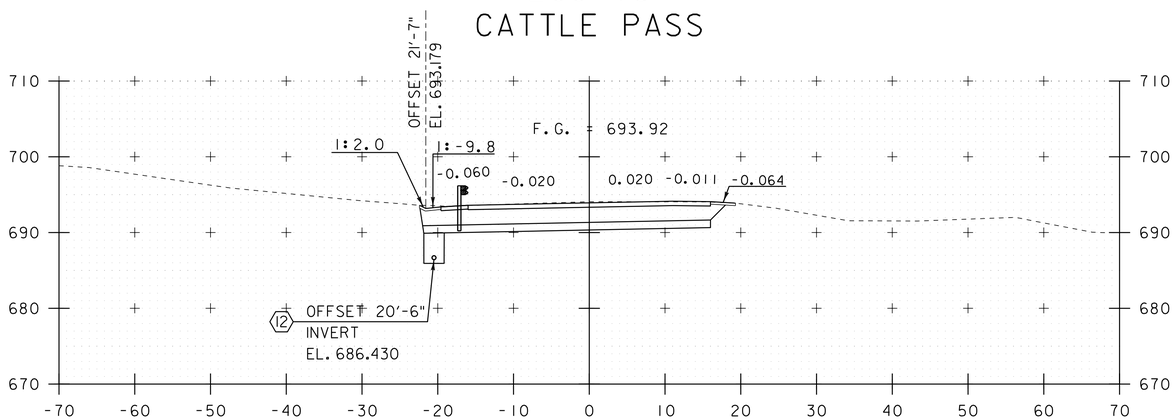

209+50

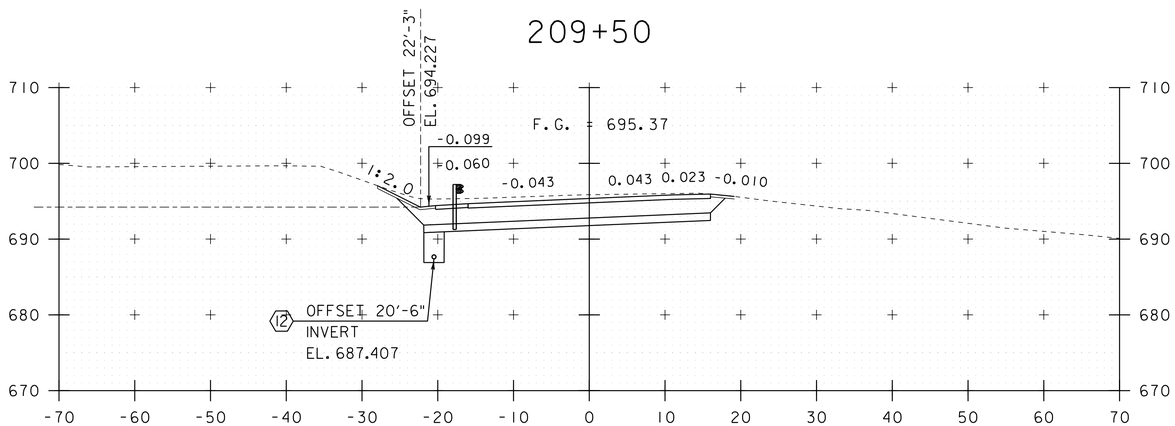

209+00

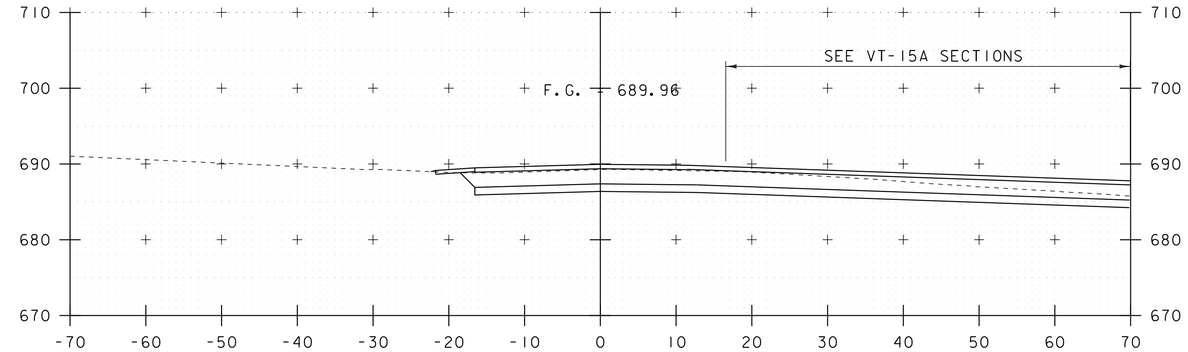

210+75
INTERSECTION VT-15A STA. 118+33.00 SKEWED

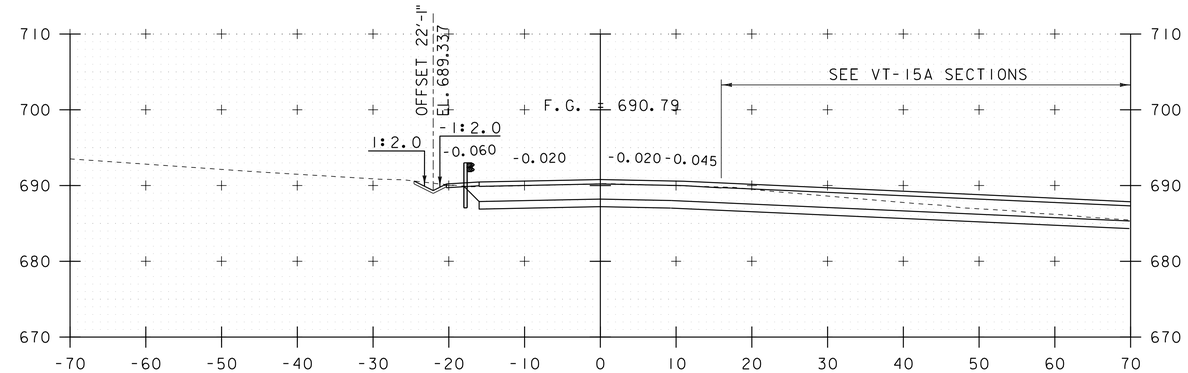

210+50

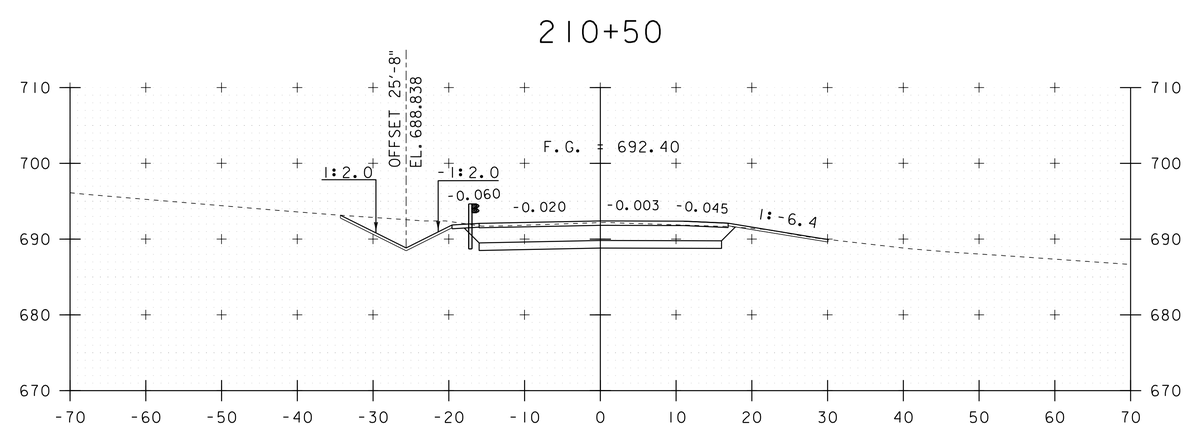

210+00

STA. 209+00 TO STA. 210+75

PROJECT NAME: MORRISTOWN	
PROJECT NUMBER: STP HES 030-2(28)	
FILE NAME: 78f329xs.dgn	PLOT DATE: 16-NOV-2015
PROJECT LEADER: C. CARLSON	DRAWN BY: G. ROKES
DESIGNED BY: N. VANDENBERG	CHECKED BY: J. LACROIX
VT-15 SECTIONS SHEET 5	SHEET 101 OF 148

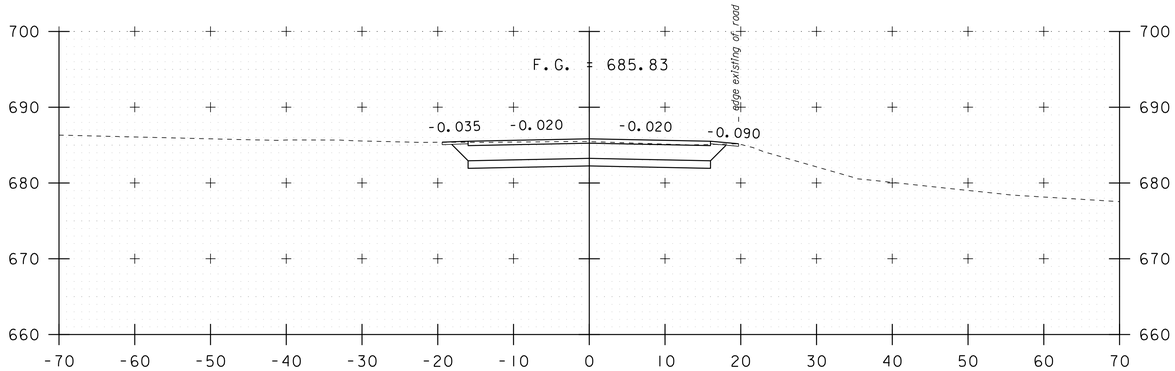

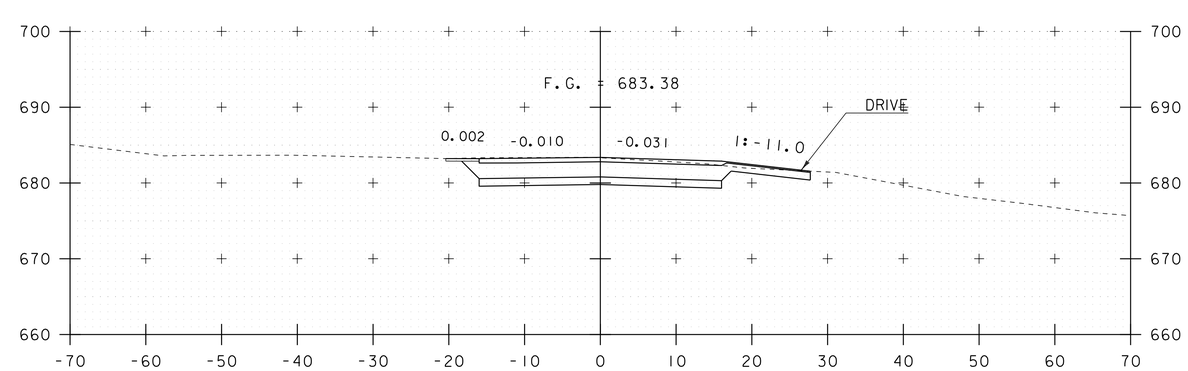

212+00

213+00
END PROJECT

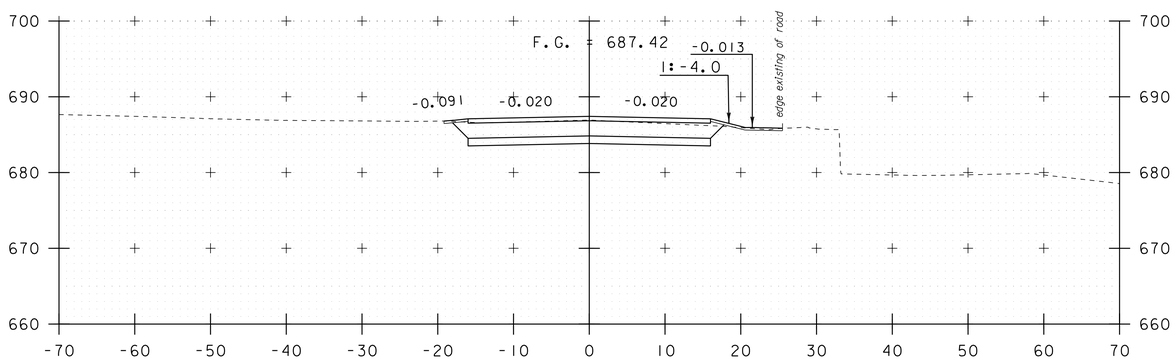

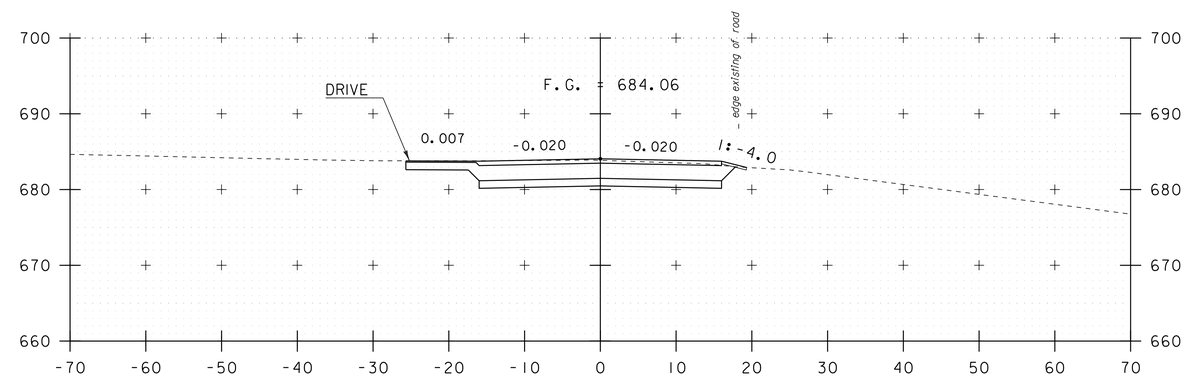

211+50

212+68
DRIVE LEFT

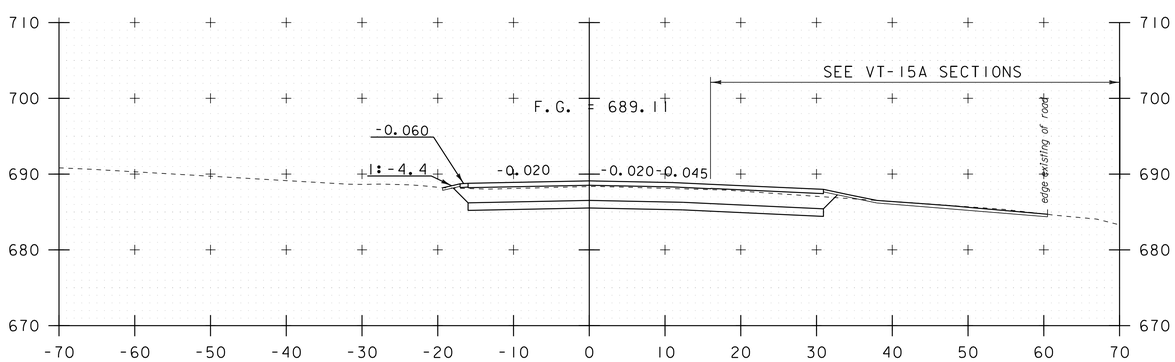

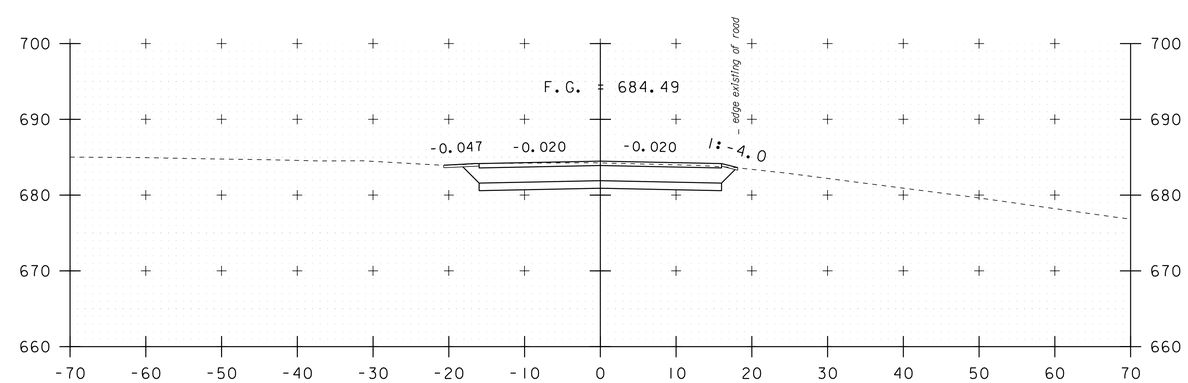

211+00

212+50

STA. 211+00 TO STA. 213+00

PROJECT NAME: MORRISTOWN	
PROJECT NUMBER: STP HES 030-2(28)	
FILE NAME: 78f329xs.dgn	PLOT DATE: 16-NOV-2015
PROJECT LEADER: C. CARLSON	DRAWN BY: G. ROKES
DESIGNED BY: N. VANDENBERG	CHECKED BY: J. LACROIX
VT-15 SECTIONS SHEET 6	SHEET 102 OF 148

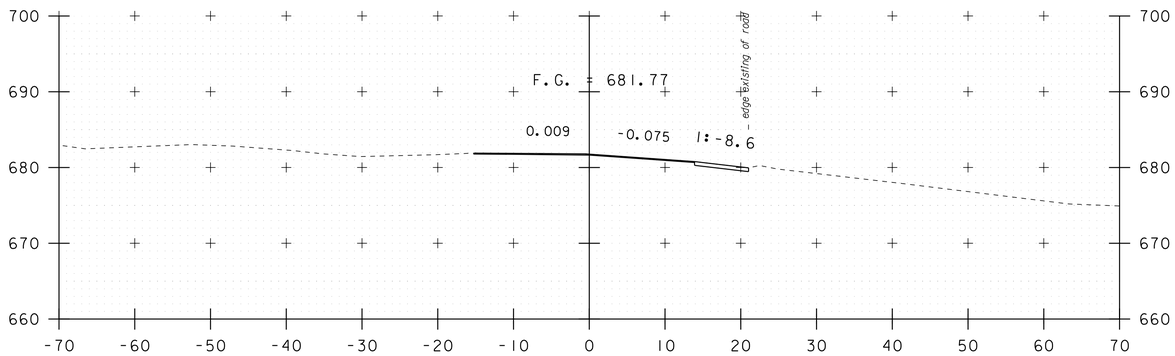

214+00
END APPROACH

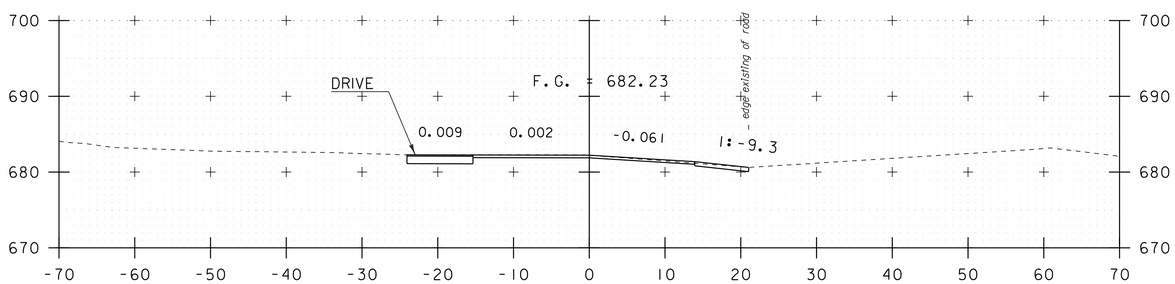

213+69

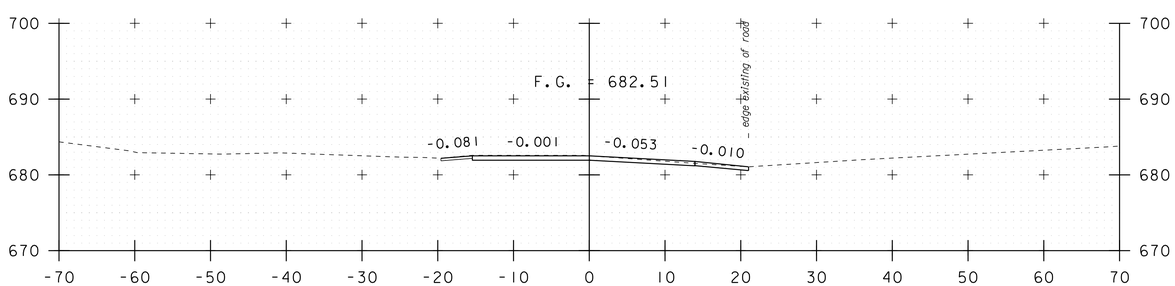

213+50

STA. 213+50 TO STA. 214+00

PROJECT NAME: MORRISTOWN	
PROJECT NUMBER: STP HES 030-2(28)	
FILE NAME: 78f329xs.dgn	PLOT DATE: 16-NOV-2015
PROJECT LEADER: C. CARLSON	DRAWN BY: G. ROKES
DESIGNED BY: N. VANDENBERG	CHECKED BY: J. LACROIX
VT-15 SECTIONS SHEET 7	SHEET 103 OF 148

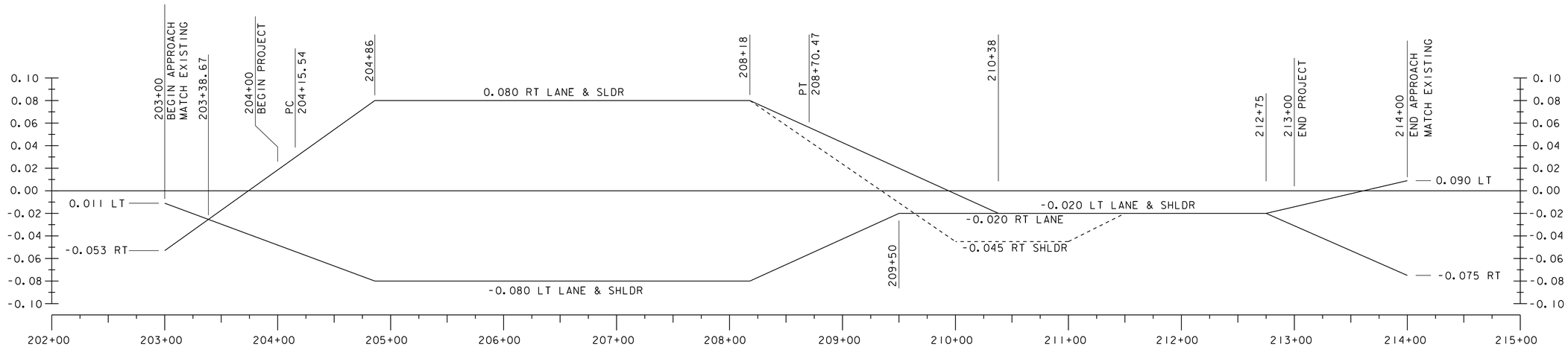

VT-15 BANKING DIAGRAM

VERTICAL SCALE N.T.S.
HORIZONTAL SCALE 1" = 50'-0"

50 0 50

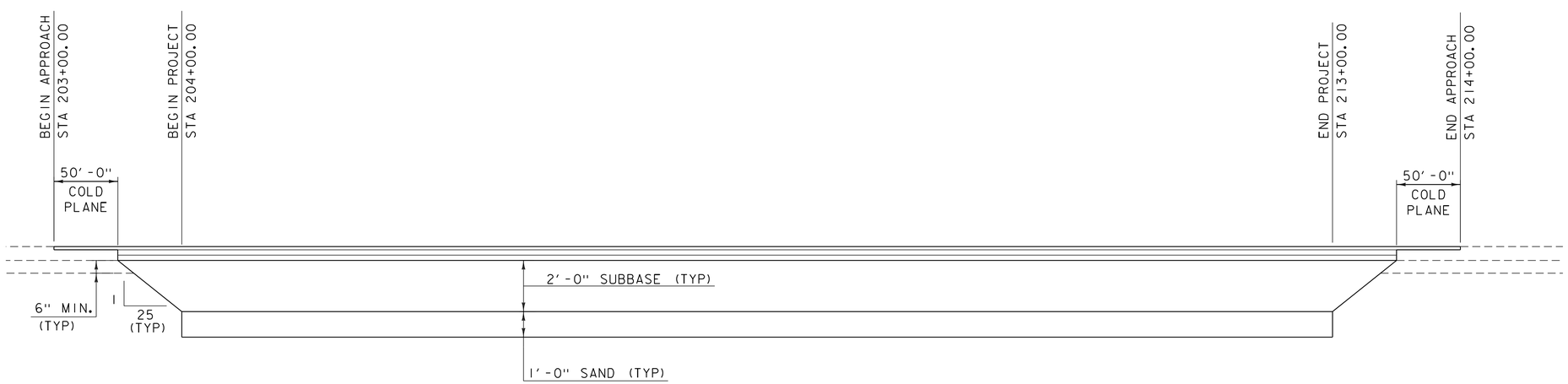

VT-15 MATERIAL TRANSITION DIAGRAM

VERTICAL SCALE N.T.S.
HORIZONTAL SCALE 1" = 50'-0"

50 0 50

SEE "VT-15 ROAD TYPICAL" FOR MATERIAL DEPTH AND TYPE

PROJECT NAME: MORRISTOWN	
PROJECT NUMBER: STP HES 030-2(28)	
FILE NAME: s78f329bnkmat.dgn	PLOT DATE: 16-NOV-2015
PROJECT LEADER: C. CARLSON	DRAWN BY:
DESIGNED BY: J. GRIFFIN	CHECKED BY: J. LACROIX
VT-15 BANKING & MATERIAL TRANSITION	SHEET 104 OF 148

DI-1 NEW 48 INCH DIA.
PRECAST REINFORCED CONCRETE CATCH BASIN
SEE "PIPE 1 AND 2 PROFILE"
ON THE "DRAINAGE SYSTEMS PROFILES" SHEET

2 24" PIPE
SEE "PIPE 1 AND 2 PROFILE"
ON THE "DRAINAGE SYSTEMS PROFILES" SHEET

3 24" PIPE
SEE "PIPE 1 AND 2 PROFILE"
ON THE "DRAINAGE SYSTEMS PROFILES" SHEET

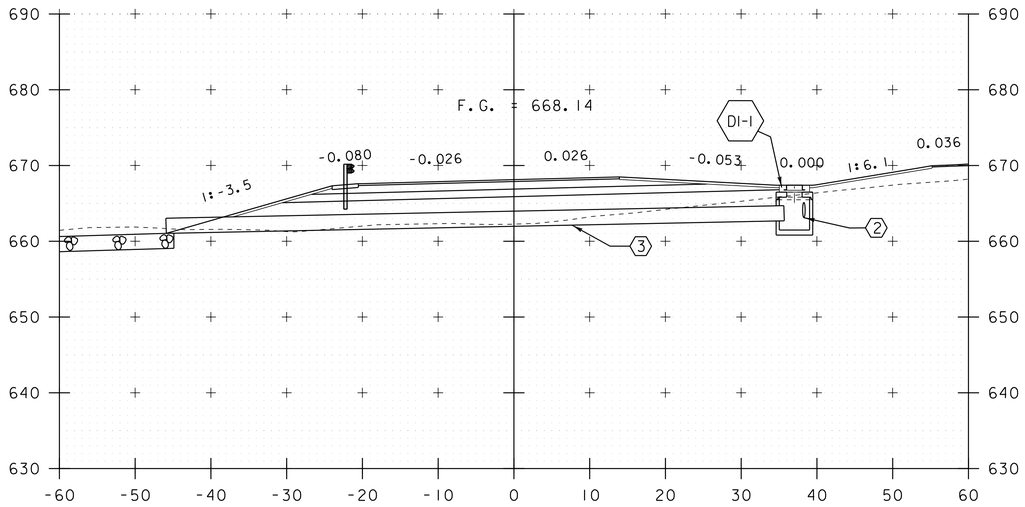

10+30
SKEWED PIPE SECTION

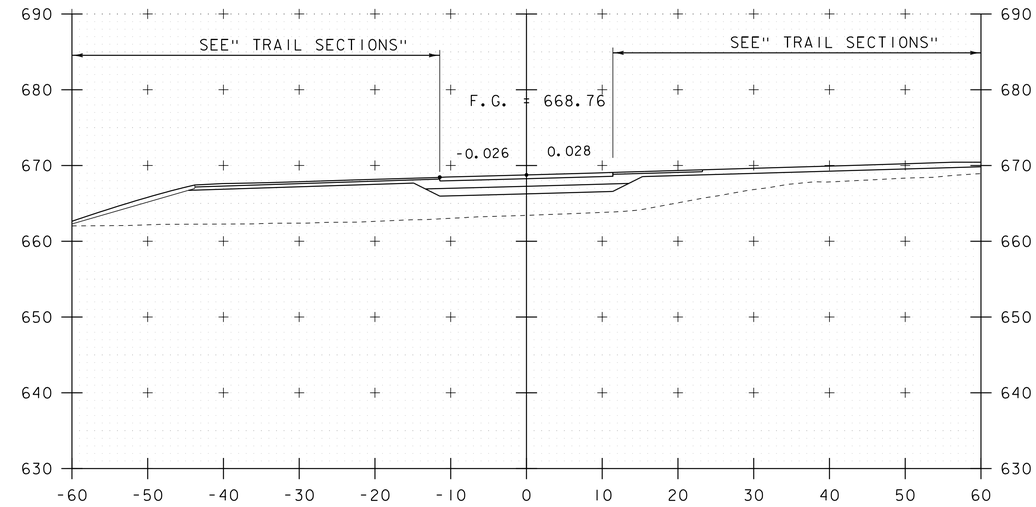

10+60
TRAIL TO TH-22 CROSSING @ 15°

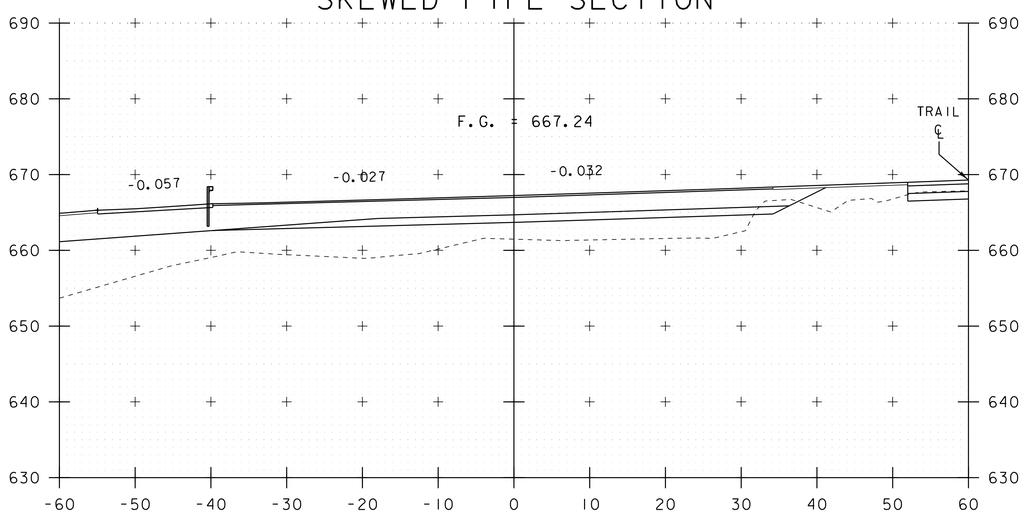

10+15
EDGE OF VT-15A

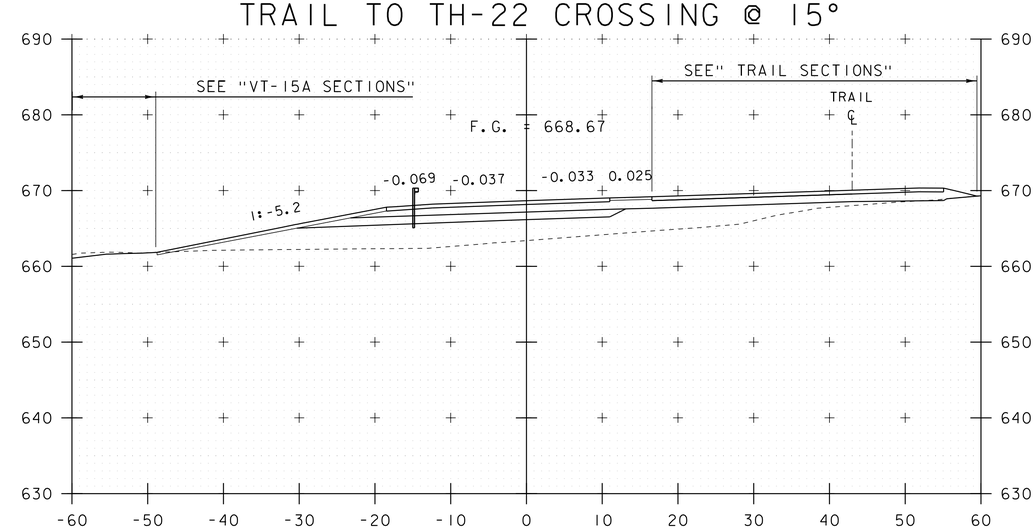

10+50

STA. 10+15 TO STA. 10+60

PROJECT NAME: MORRISTOWN	
PROJECT NUMBER: BRO 0240(3)S	
FILE NAME: 78f329xs.dgn	PLOT DATE: 16-NOV-2015
PROJECT LEADER: C. CARLSON	DRAWN BY: G. ROKES
DESIGNED BY: N. VANDENBERG	CHECKED BY: J. LACROIX
TH-22 SECTIONS SHEET 1	SHEET 105 OF 148

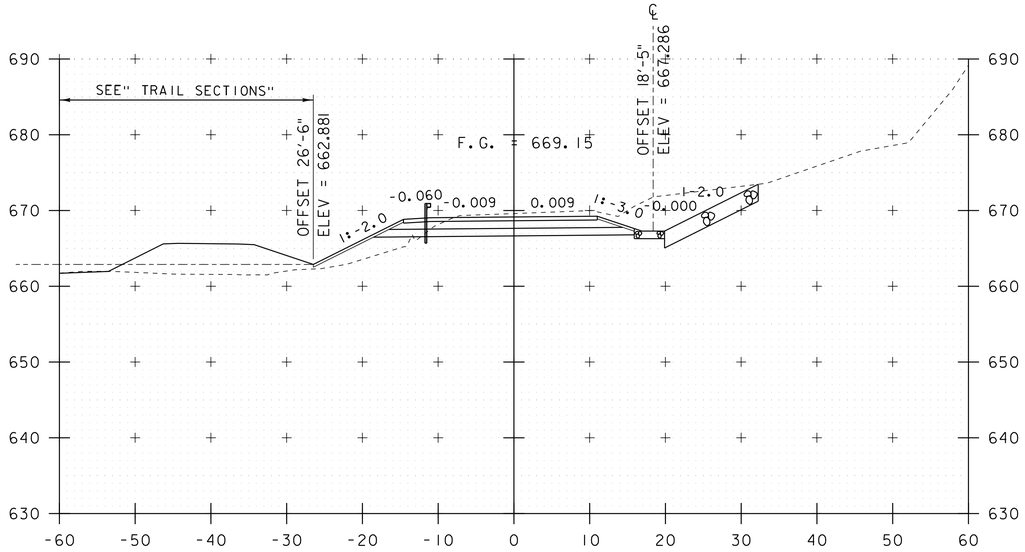

11+25

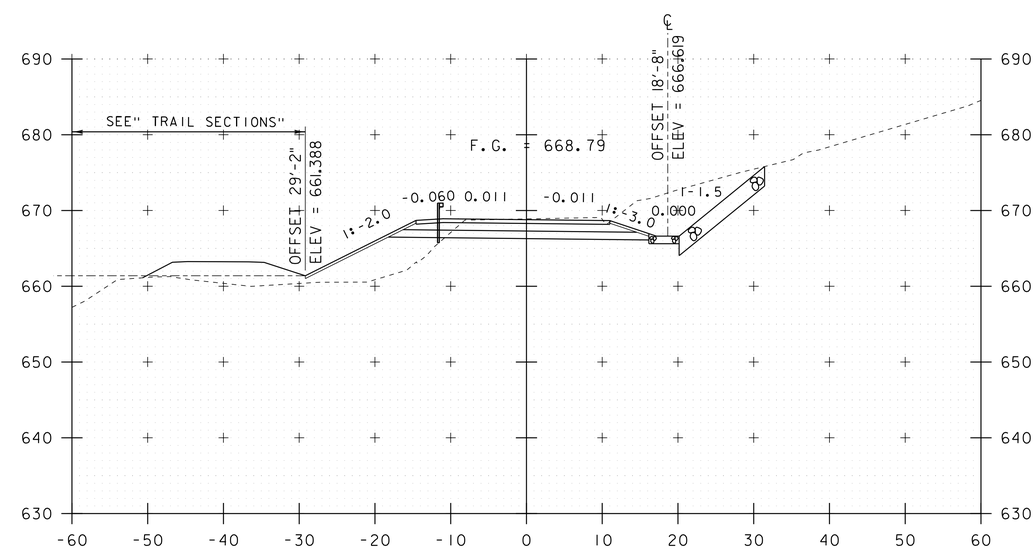

11+75

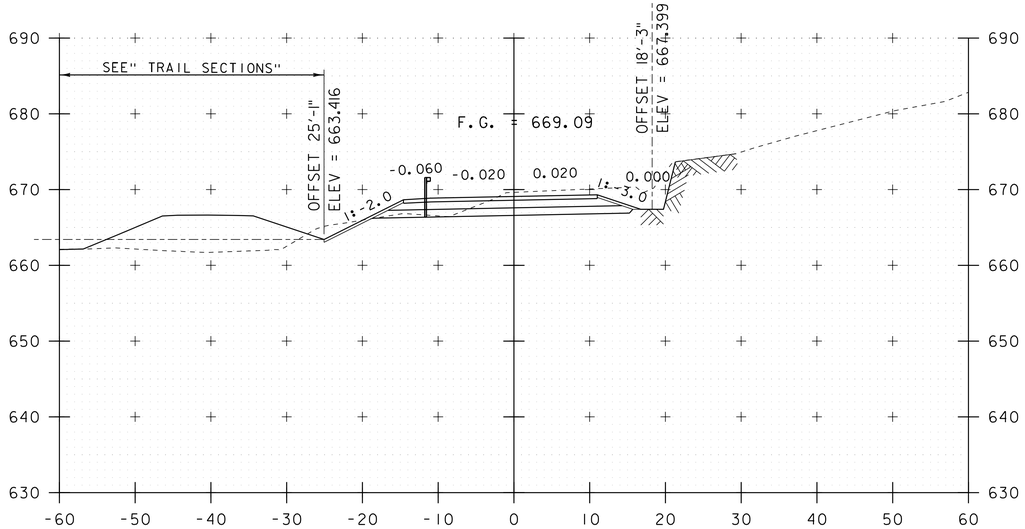

11+00

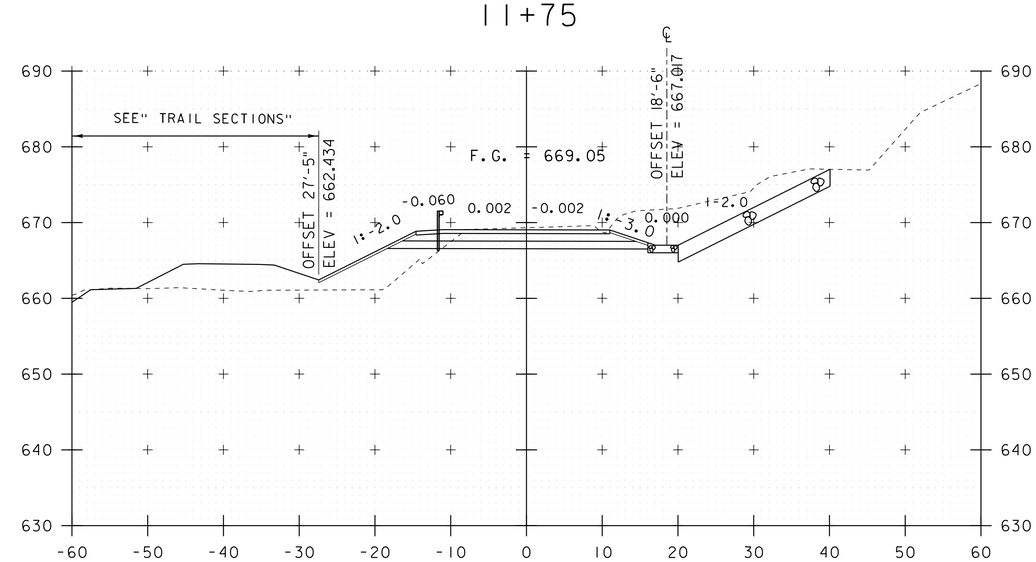

11+50

STA. 11+00 TO STA. 11+75

PROJECT NAME: MORRISTOWN	
PROJECT NUMBER: BRO 0240(3)S	
FILE NAME: 78f329xs.dgn	PLOT DATE: 16-NOV-2015
PROJECT LEADER: C. CARLSON	DRAWN BY: G. ROKES
DESIGNED BY: N. VANDENBERG	CHECKED BY: J. LACROIX
TH-22 SECTIONS SHEET 2	SHEET 106 OF 148

DI-2 NEW 48 INCH DIA.
PRECAST REINFORCED CONCRETE CATCH BASIN
SEE "TH-22 AND TRAIL DRAINAGE PROFILE"
ON THE "DRAINAGE SYSTEMS PROFILES" SHEET

4 18" PIPE
SEE "TH-22 AND TRAIL DRAINAGE PROFILE"
ON THE "DRAINAGE SYSTEMS PROFILES" SHEET

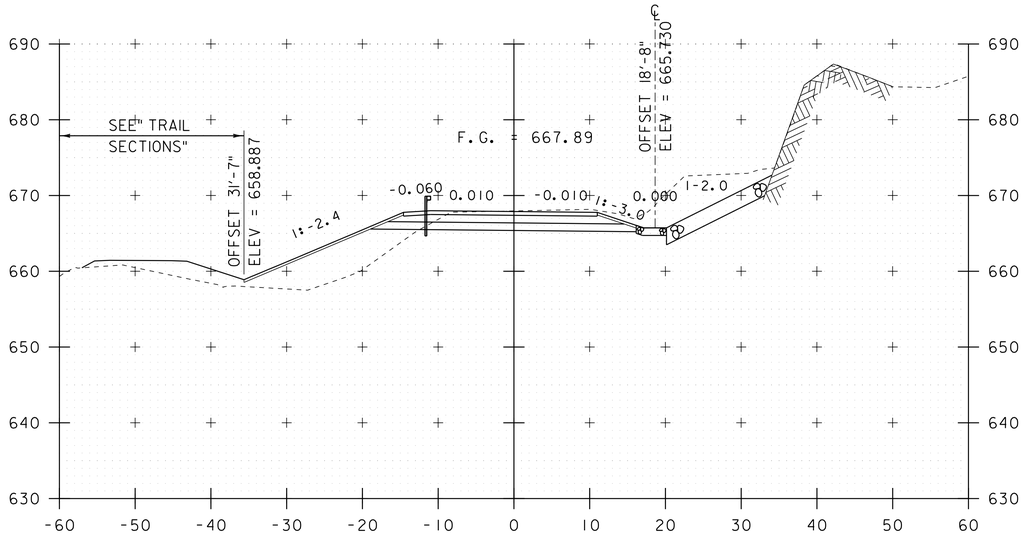

12+25

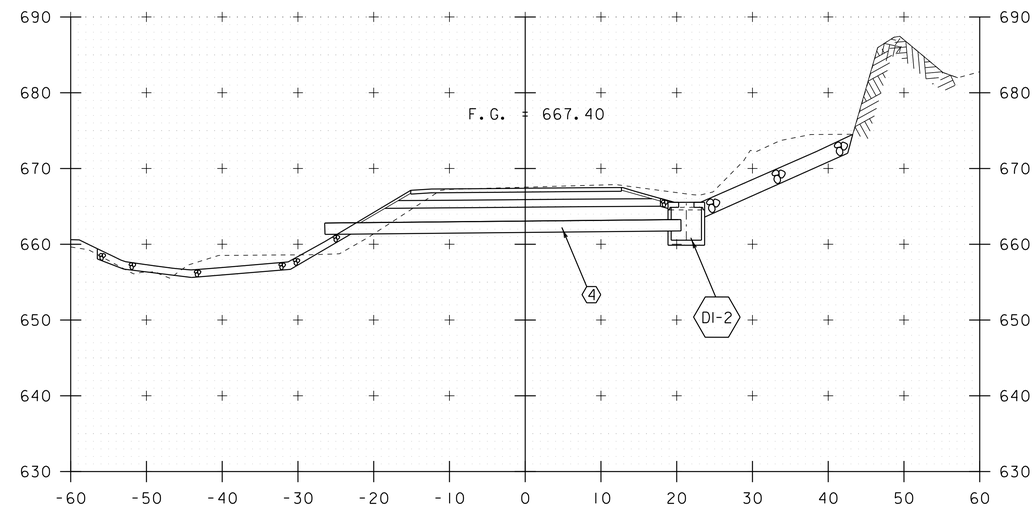

12+50
PIPE @ 30° RT

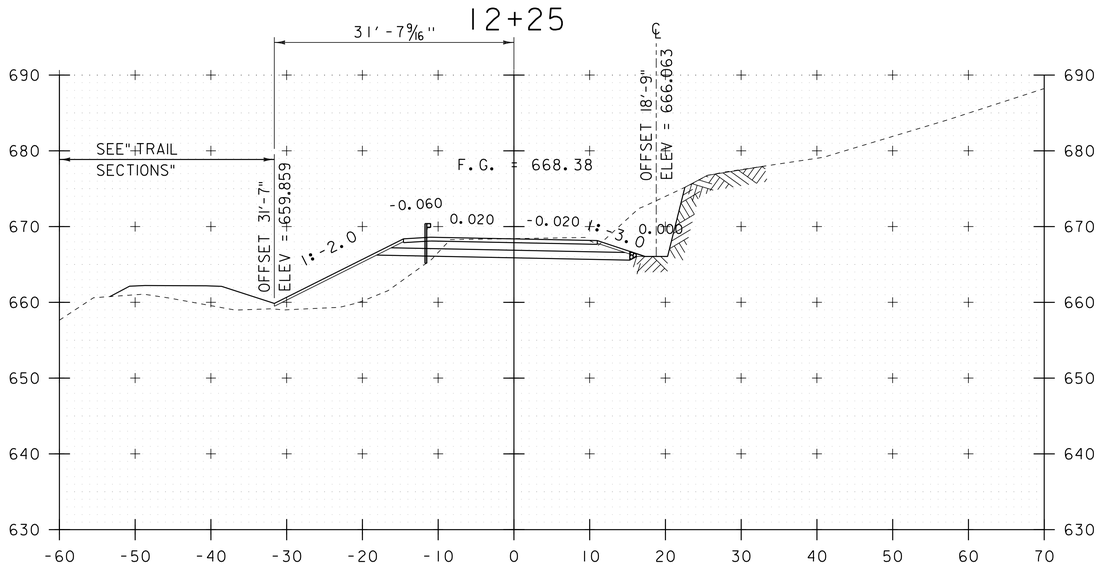

12+00

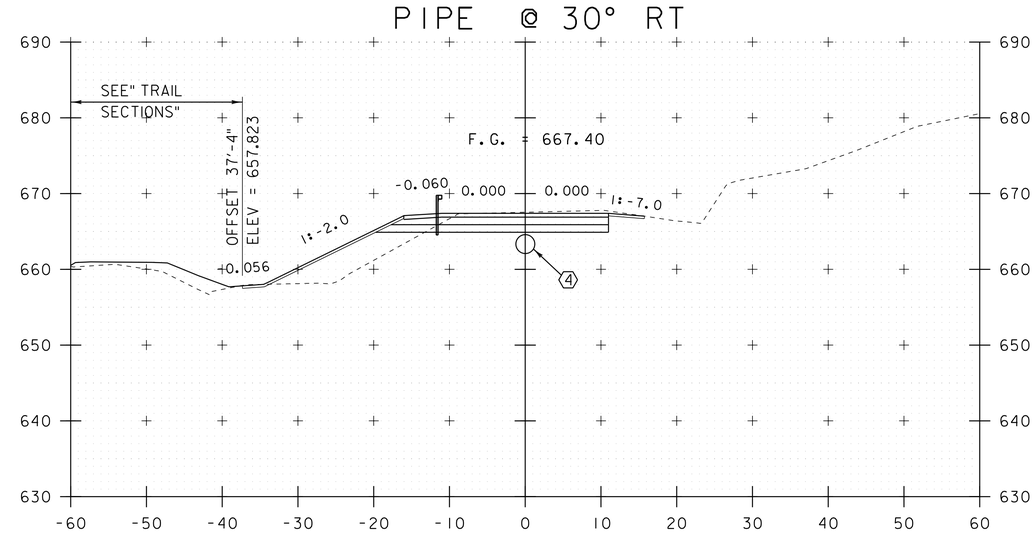

12+50

STA. 12+00 TO STA. 12+50

PROJECT NAME: MORRISTOWN	
PROJECT NUMBER: BRO 0240(3)S	
FILE NAME: 78f329xs.dgn	PLOT DATE: 16-NOV-2015
PROJECT LEADER: C. CARLSON	DRAWN BY: G. ROKES
DESIGNED BY: N. VANDENBERG	CHECKED BY: J. LACROIX
TH-22 SECTIONS SHEET 3	SHEET 107 OF 148

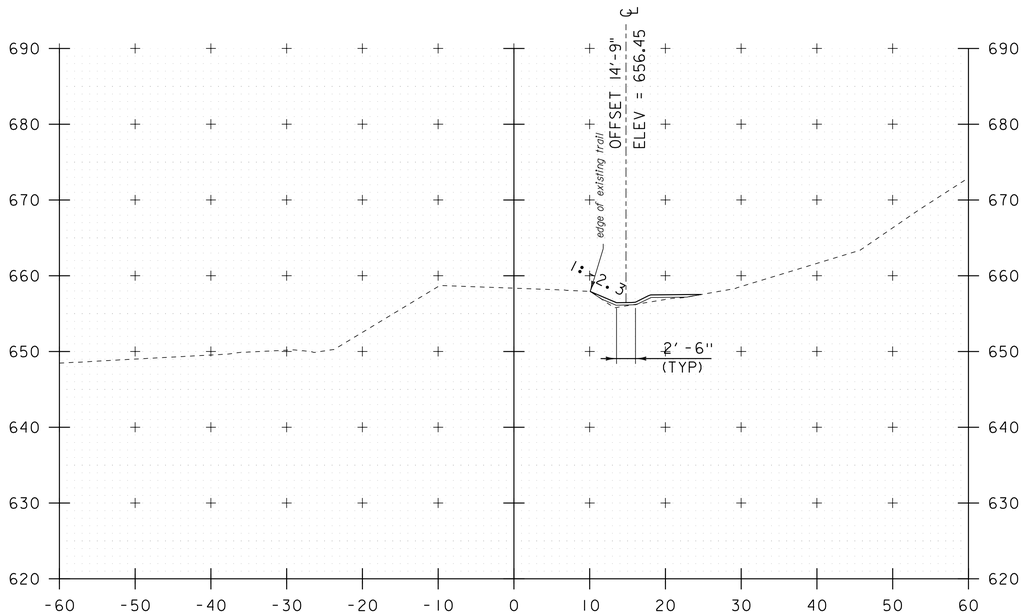

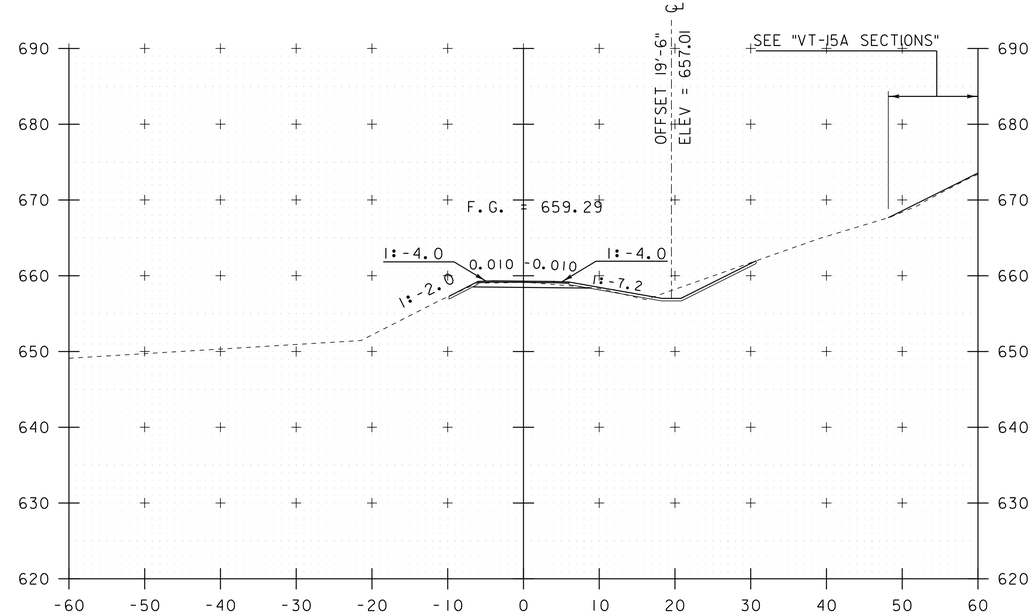

52+00

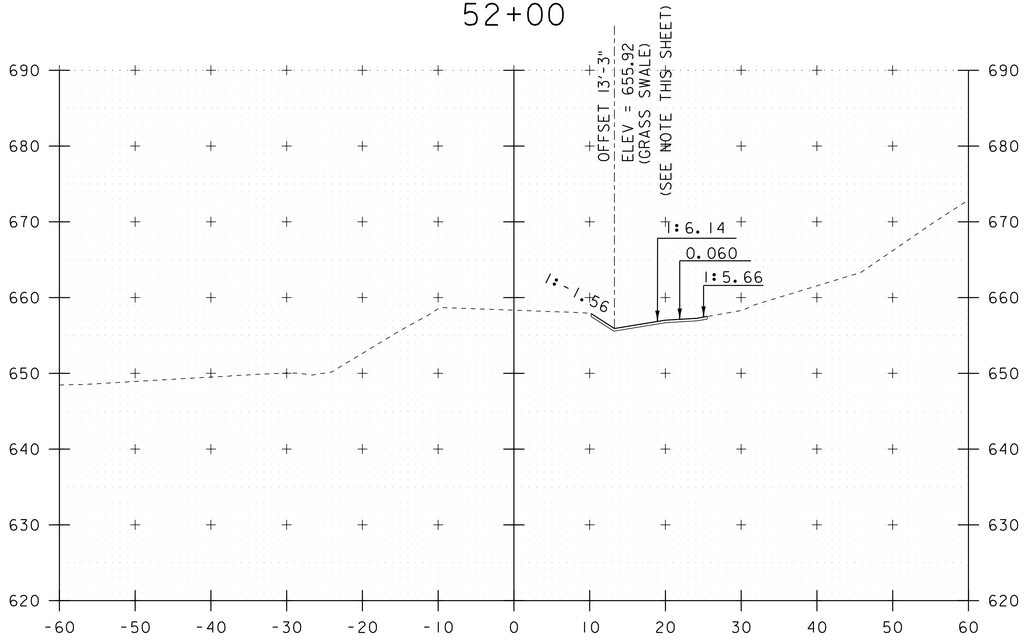

53+00

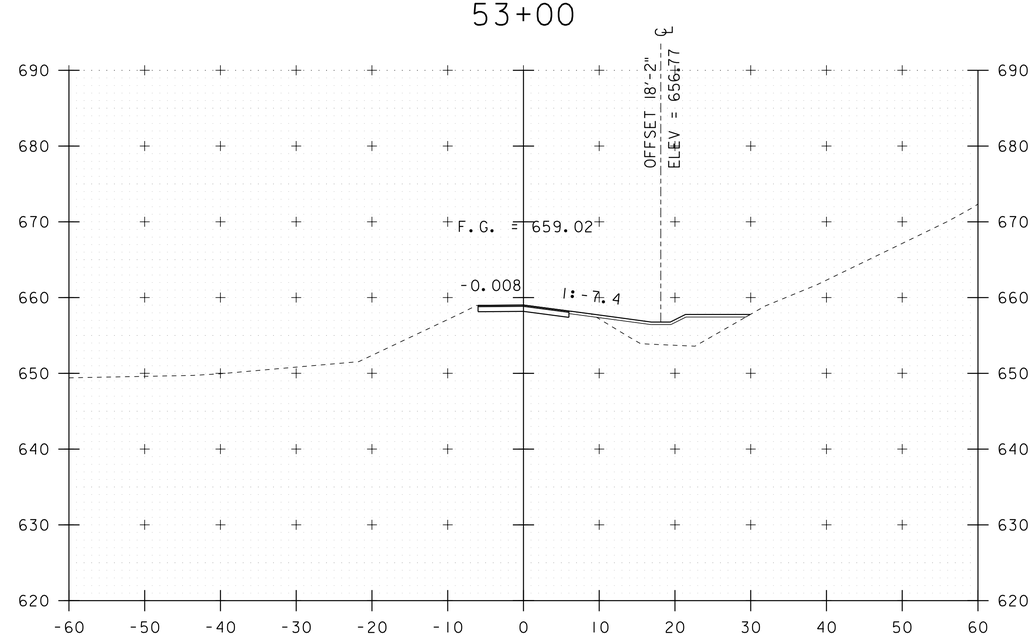

51+97

52+50

NOTE: FOR ADDITIONAL INFORMATION FOR THE STORMWATER GRASS TREATMENT SWALE, SEE "GRASS TREATMENT SWALE PLAN" SHEET FOR ALIGNMENT INFORMATION, "GRASS TREATMENT SWALE PROFILE" ON THE , "DRAINAGE SYSTEMS PROFILES" SHEET AND THE "GRASS TREATMENT SWALE SECTIONS" SHEETS.

STA. 51+97 TO STA. 53+00

PROJECT NAME: MORRISTOWN	
PROJECT NUMBER: BRO 0240(3)S	
FILE NAME: 78f329xs.dgn	PLOT DATE: 16-NOV-2015
PROJECT LEADER: C. CARLSON	DRAWN BY: G. ROKES
DESIGNED BY: N. VANDENBERG	CHECKED BY: J. LACROIX
TRAIL SECTIONS SHEET 1	SHEET 108 OF 148

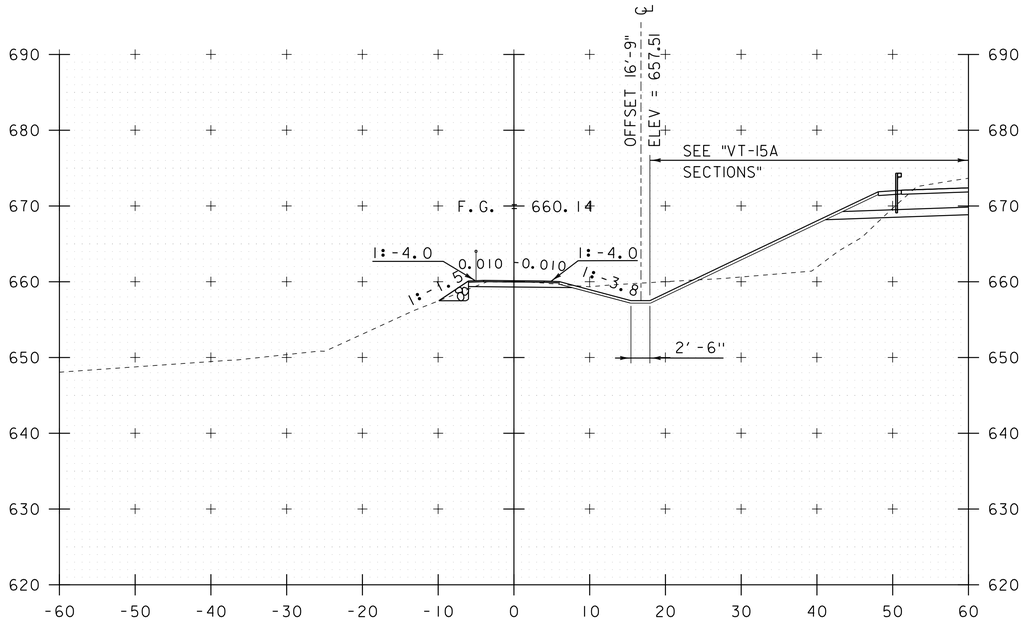

54+00

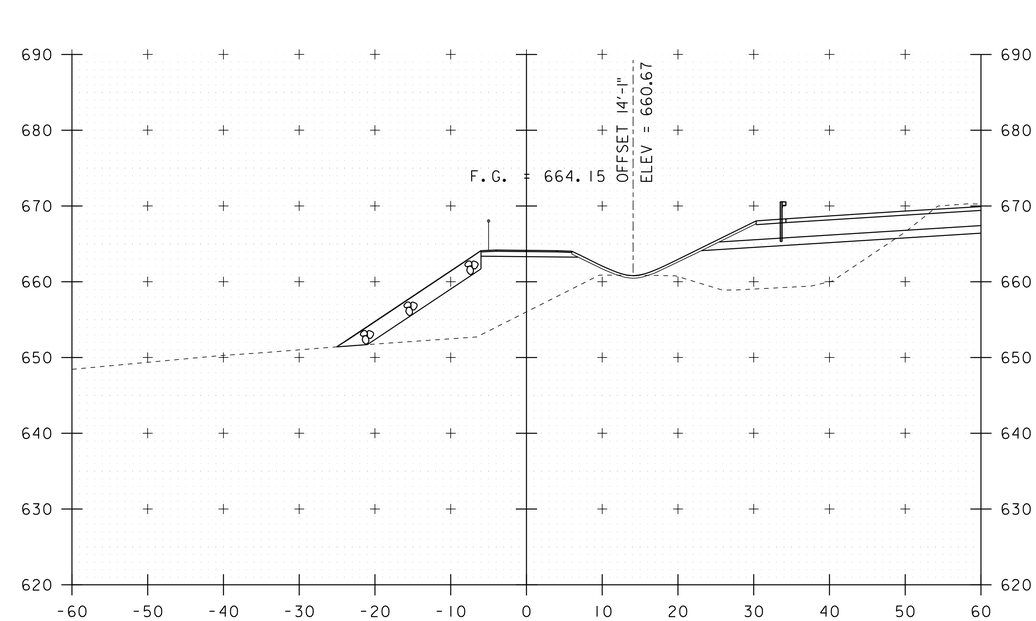

55+00

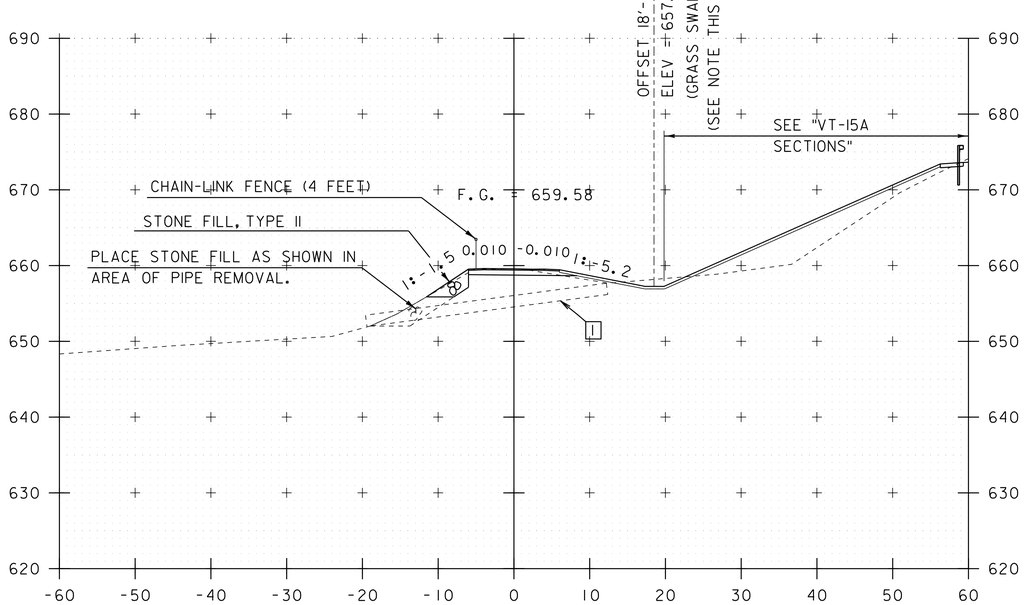

53+50

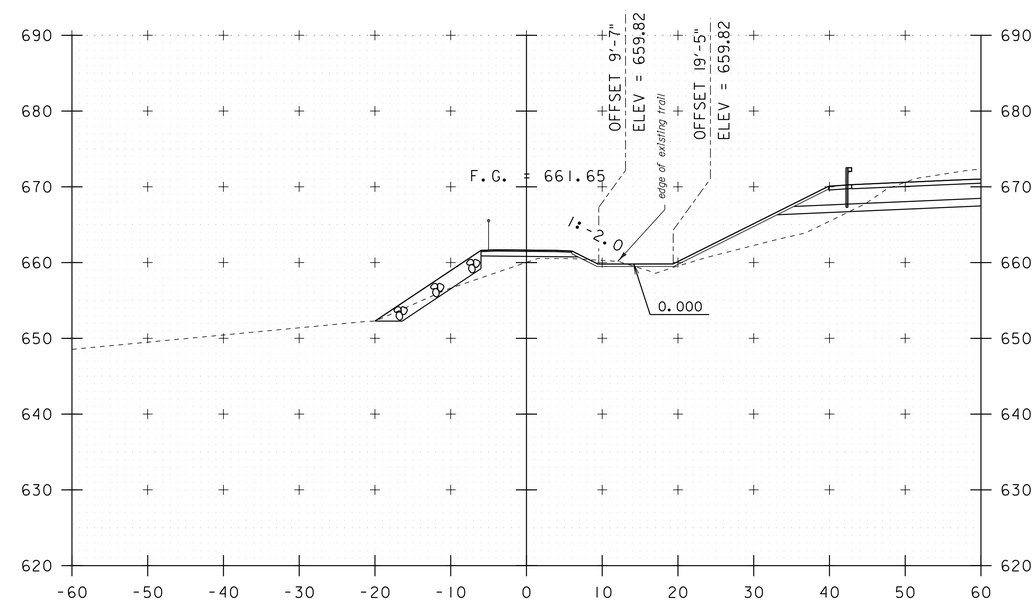

54+50

NOTE: FOR ADDITIONAL INFORMATION FOR THE STORMWATER GRASS TREATMENT SWALE, SEE "GRASS TREATMENT SWALE PLAN" SHEET FOR ALIGNMENT INFORMATION, "GRASS TREATMENT SWALE PROFILE" ON THE , "DRAINAGE SYSTEMS PROFILES" SHEET AND THE "GRASS TREATMENT SWALE SECTIONS" SHEETS.

1 REMOVE EXISTING 18" DIA. IRON PIPE
STA. 53+42.77
FROM 19'-5" LT TO 12'-4" RT

STA. 53+50 TO STA. 55+00

PROJECT NAME: MORRISTOWN	
PROJECT NUMBER: BRO 0240(3)S	
FILE NAME: 78f329xs.dgn	PLOT DATE: 16-NOV-2015
PROJECT LEADER: C. CARLSON	DRAWN BY: G. ROKES
DESIGNED BY: N. VANDENBERG	CHECKED BY: J. LACROIX
TRAIL SECTIONS SHEET 2	SHEET 109 OF 148

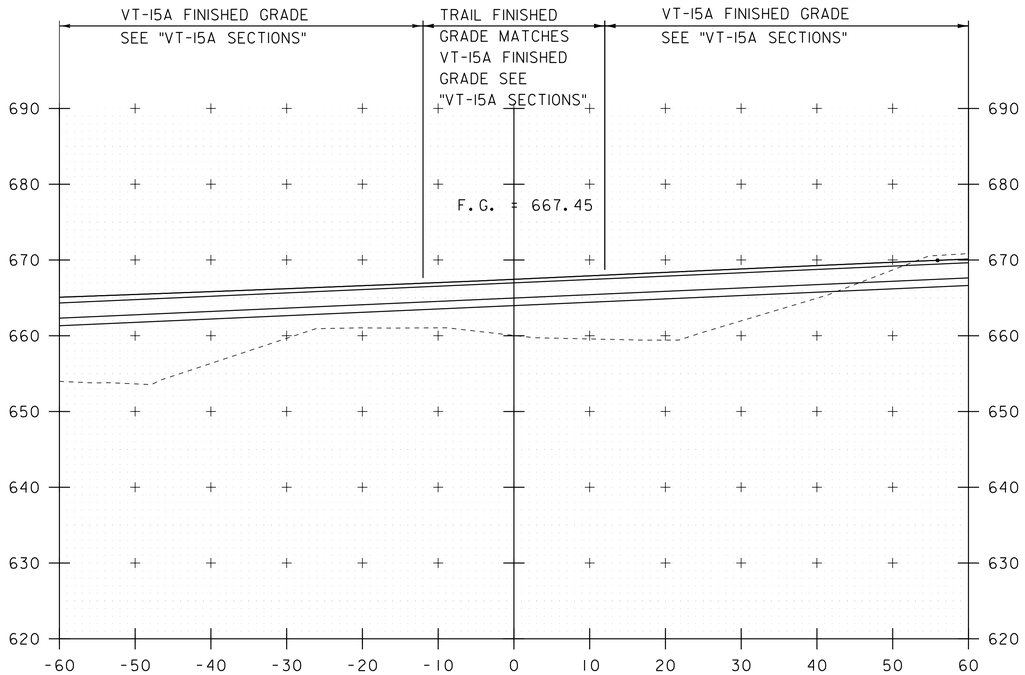

55+50

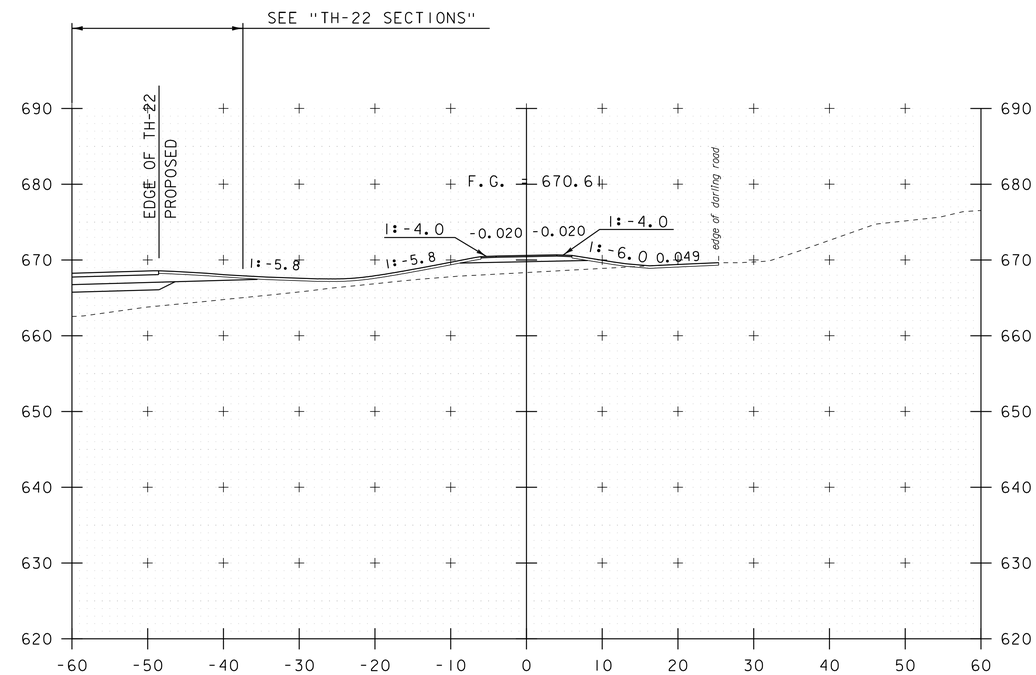

56+00

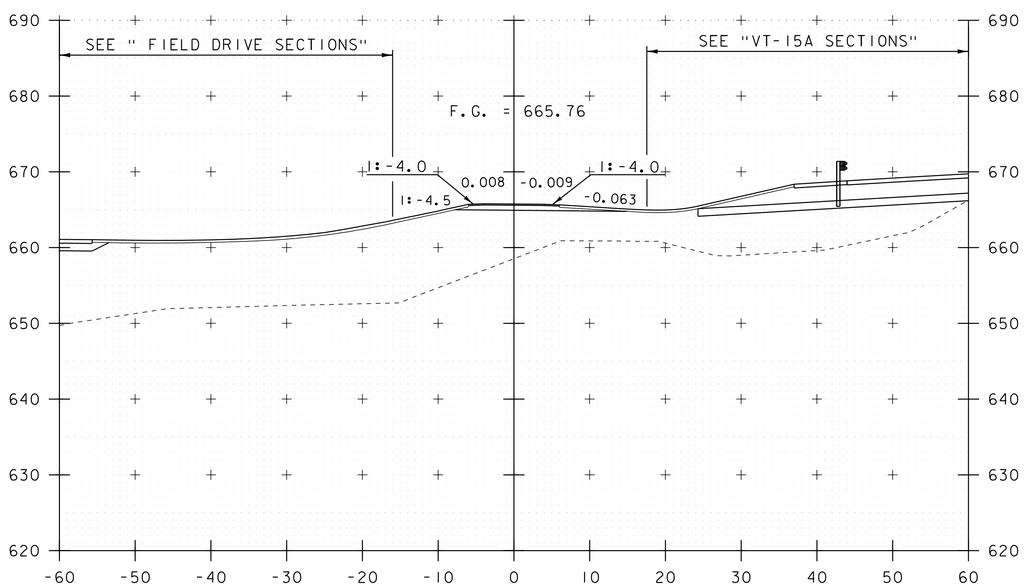

55+25

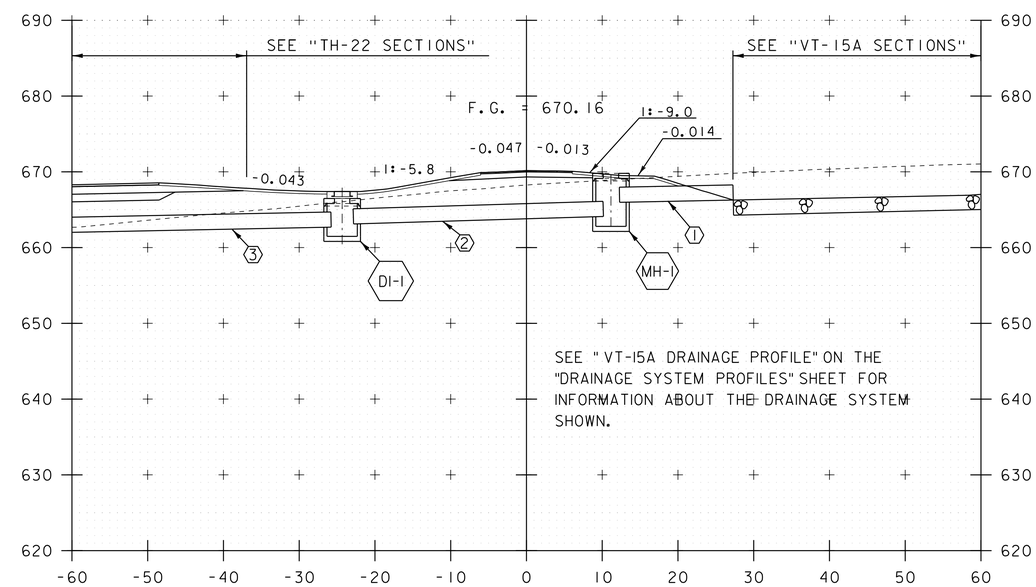

55+89.81
SKEWED TO PIPE

MH-1 NEW MANHOLE

DI-1 NEW DROP INLET

1 NEW 24 INCH DIA. PIPE

2 NEW 24 INCH DIA. PIPE

3 NEW 24 INCH DIA. PIPE

STA. 55+25 TO STA. 56+00

PROJECT NAME: MORRISTOWN	
PROJECT NUMBER: BRO 0240(3)S	
FILE NAME: 78f329xs.dgn	PLOT DATE: 16-NOV-2015
PROJECT LEADER: C. CARLSON	DRAWN BY: G. ROKES
DESIGNED BY: N. VANDENBERG	CHECKED BY: J. LACROIX
TRAIL SECTIONS SHEET 3	SHEET 110 OF 148

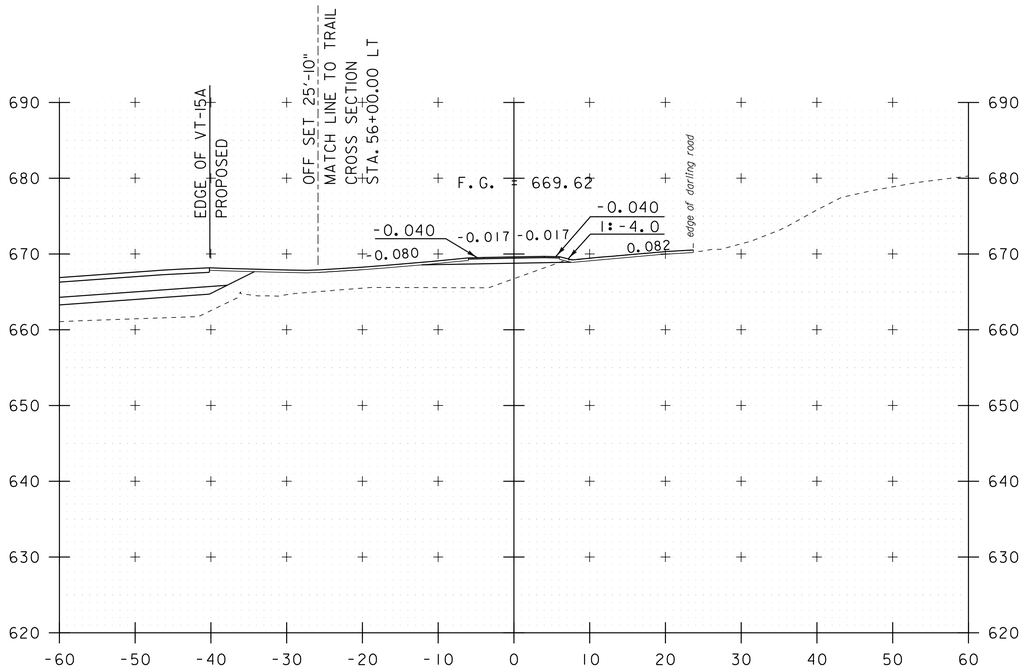

56+50

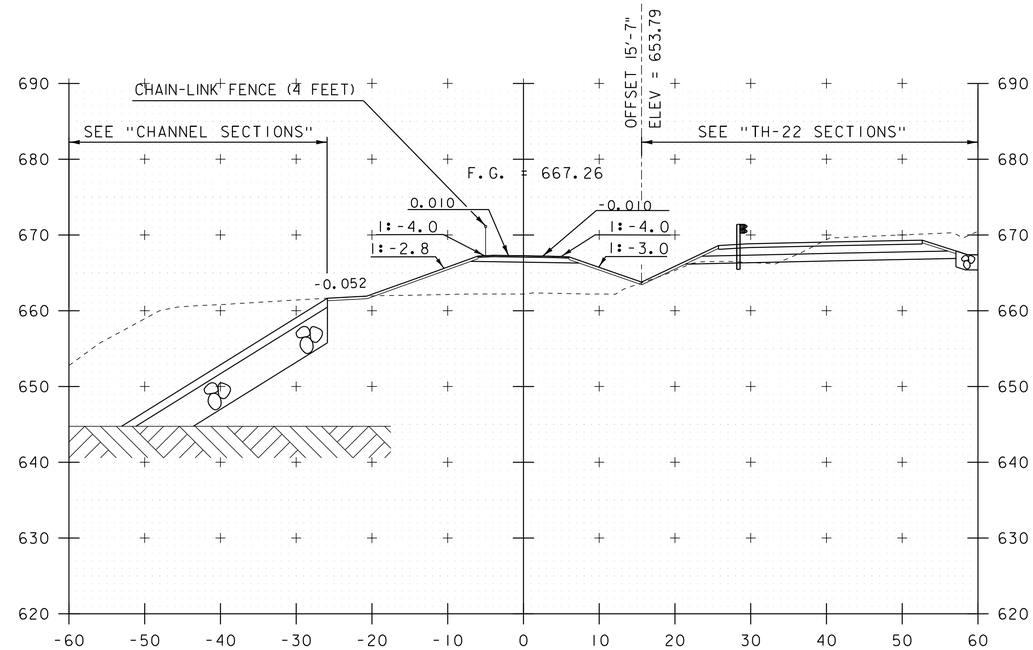

57+25

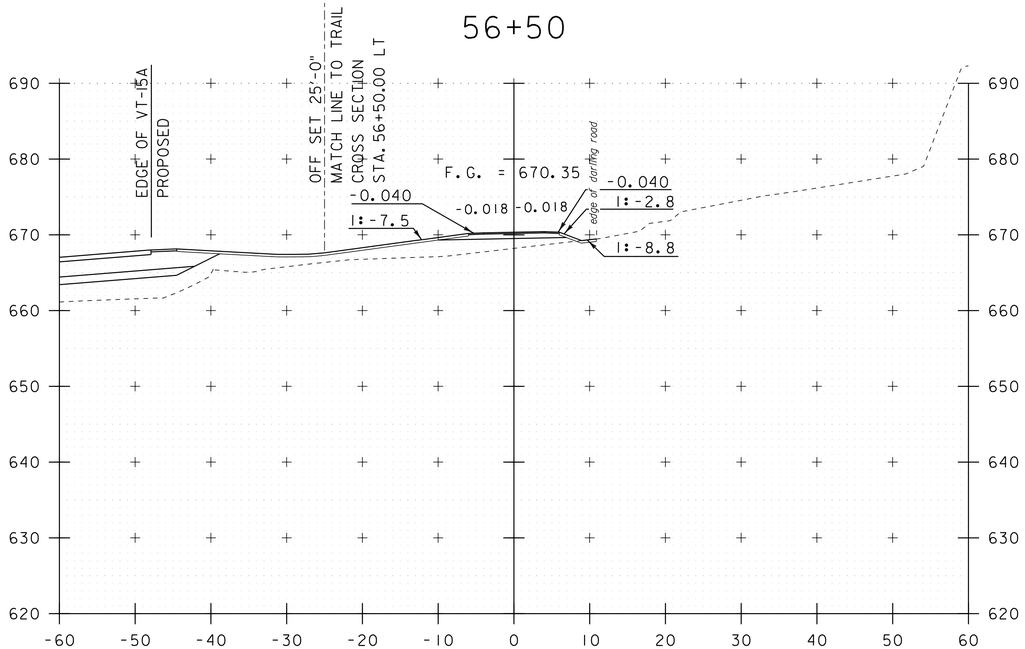

56+25

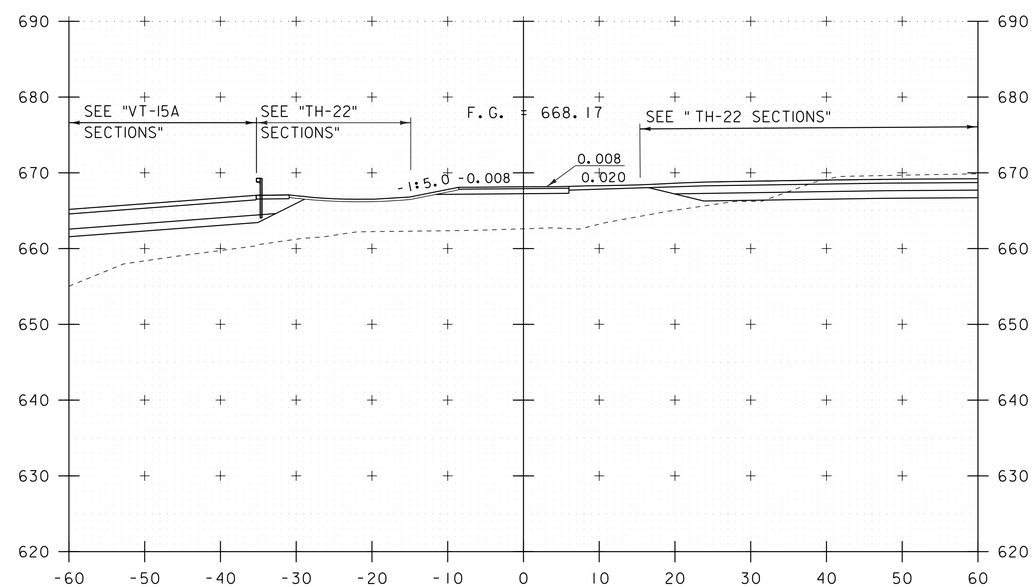

57+00

STA. 56+25 TO STA. 57+25

PROJECT NAME: MORRISTOWN	
PROJECT NUMBER: BRO 0240(3)S	
FILE NAME: 78f329xs.dgn	PLOT DATE: 16-NOV-2015
PROJECT LEADER: C. CARLSON	DRAWN BY: G. ROKES
DESIGNED BY: N. VANDENBERG	CHECKED BY: J. LACROIX
TRAIL SECTIONS SHEET 4	SHEET III OF 148

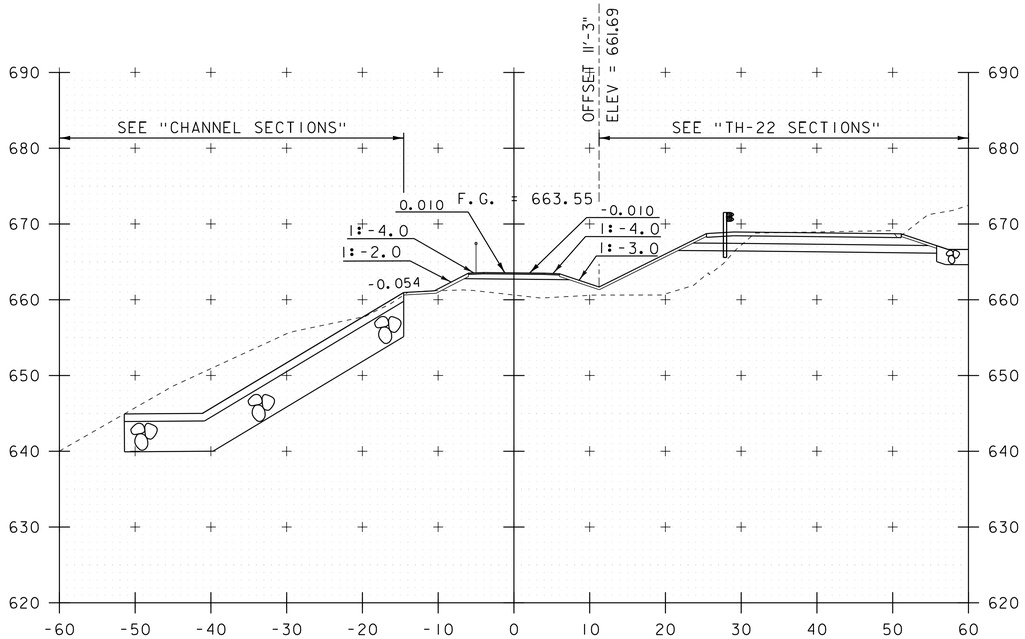

58+00

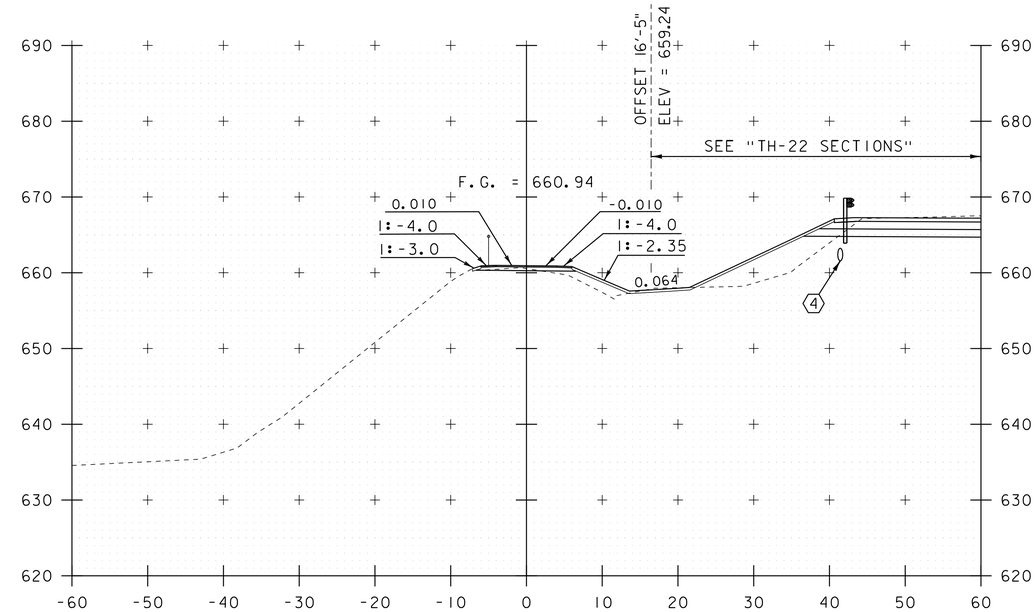

58+89

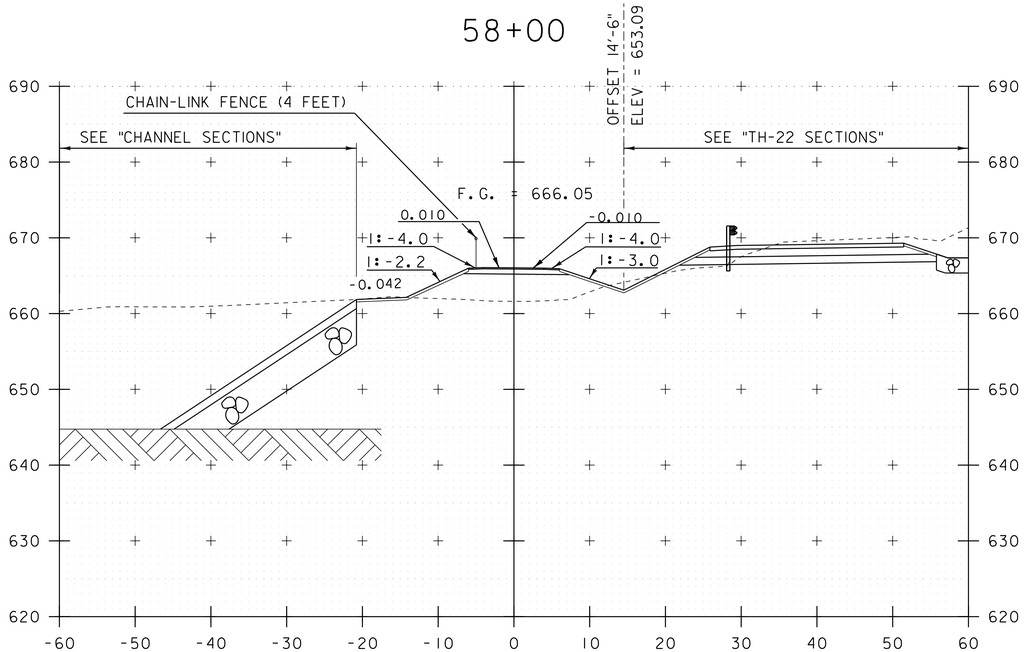

57+50

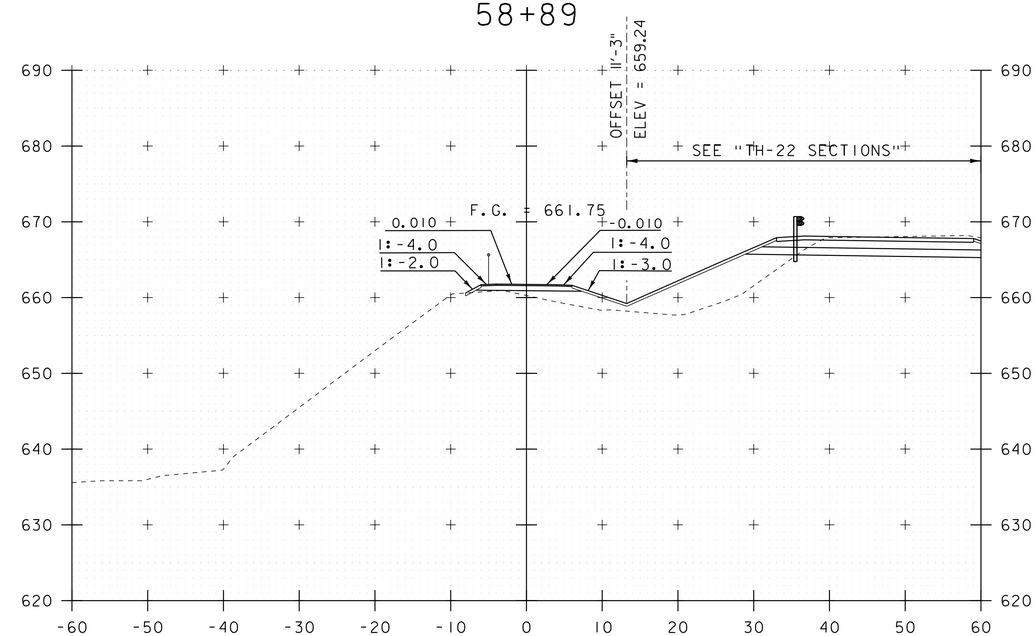

58+50

4 NEW 18 INCH DIA. PIPE
SEE "TH-22 AND TRAIL DRAINAGE PROFILE"
ON THE "DRAINAGE SYSTEMS PROFILE" SHEET

STA. 57+50 TO STA. 58+89

PROJECT NAME: MORRISTOWN	
PROJECT NUMBER: BRO 0240(3)S	
FILE NAME: 78f329xs.dgn	PLOT DATE: 16-NOV-2015
PROJECT LEADER: C. CARLSON	DRAWN BY: G. ROKES
DESIGNED BY: N. VANDENBERG	CHECKED BY: J. LACROIX
TRAIL SECTIONS SHEET 5	SHEET 112 OF 148

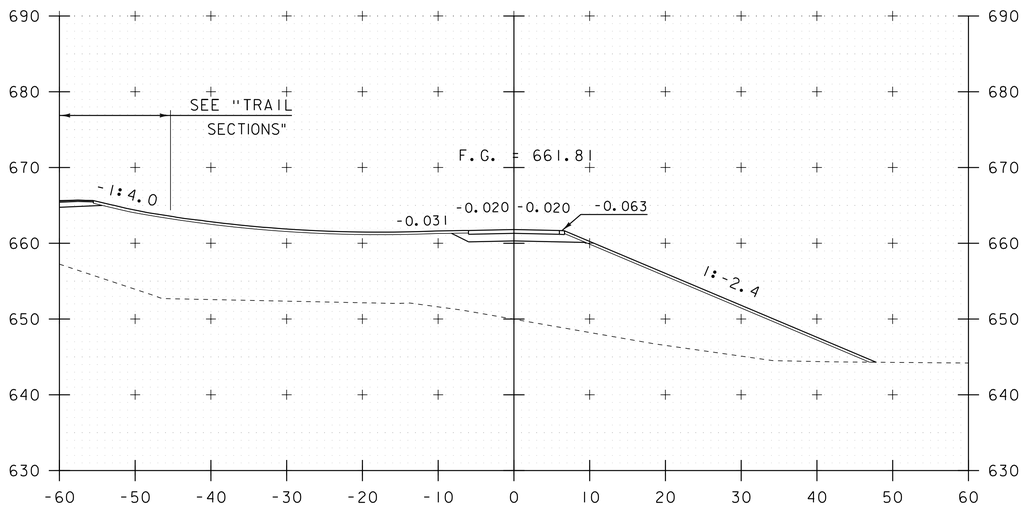

20+50

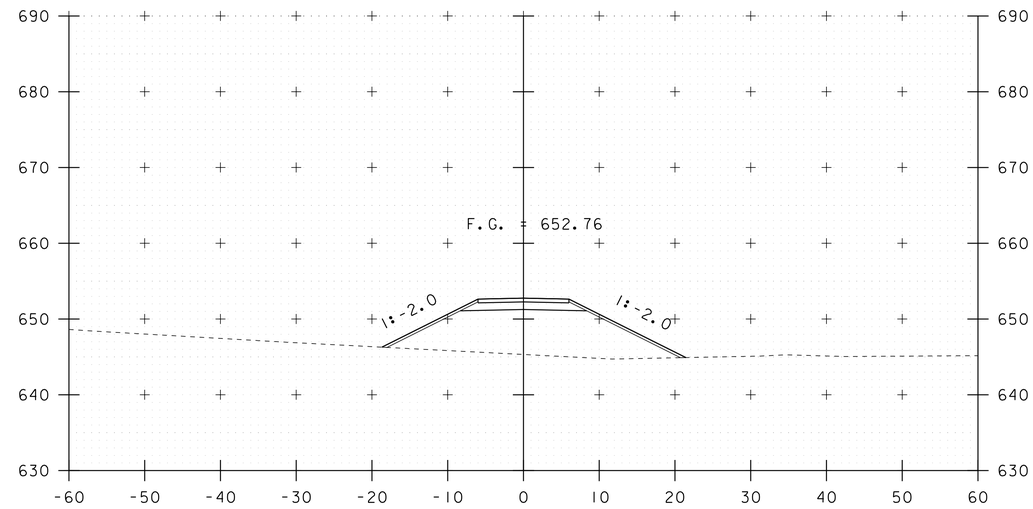

21+50

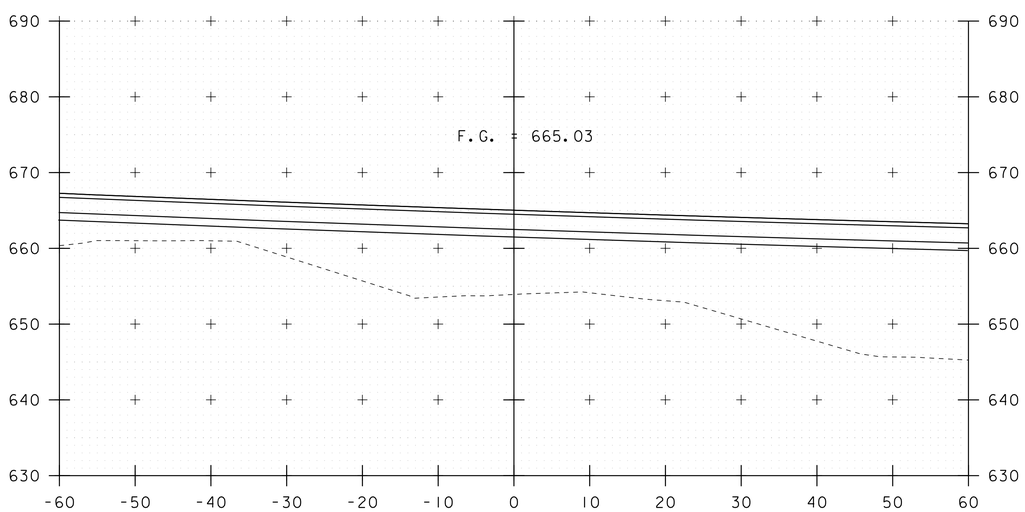

20+15
EDGE OF VT-15A

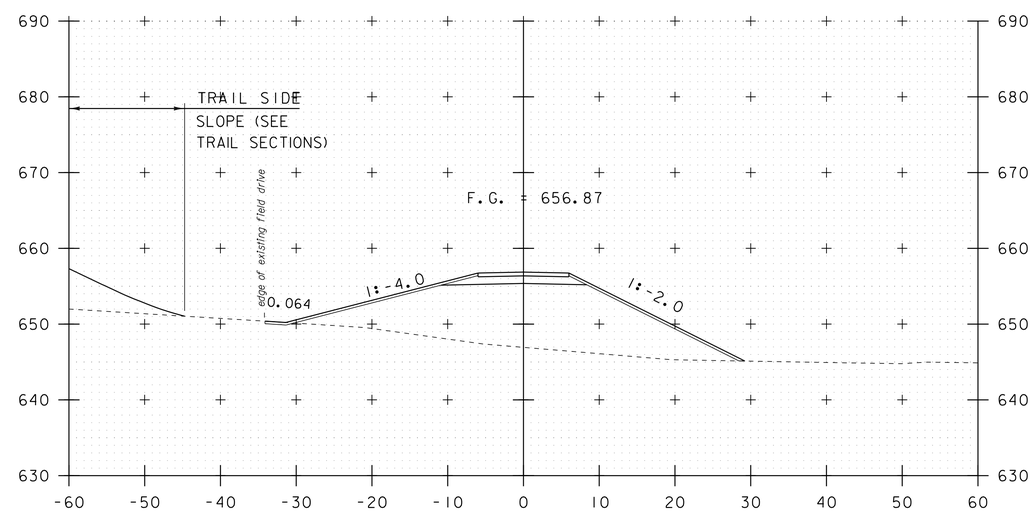

21+00

STA. 20+15 TO STA. 21+50

PROJECT NAME: MORRISTOWN	
PROJECT NUMBER: BRO 0240(3)S	
FILE NAME: 78f329xs.dgn	PLOT DATE: 16-NOV-2015
PROJECT LEADER: C. CARLSON	DRAWN BY: G. ROKES
DESIGNED BY: N. VANDENBERG	CHECKED BY: J. LACROIX
FIELD DRIVE SECTIONS SHEET 1	SHEET 113 OF 148

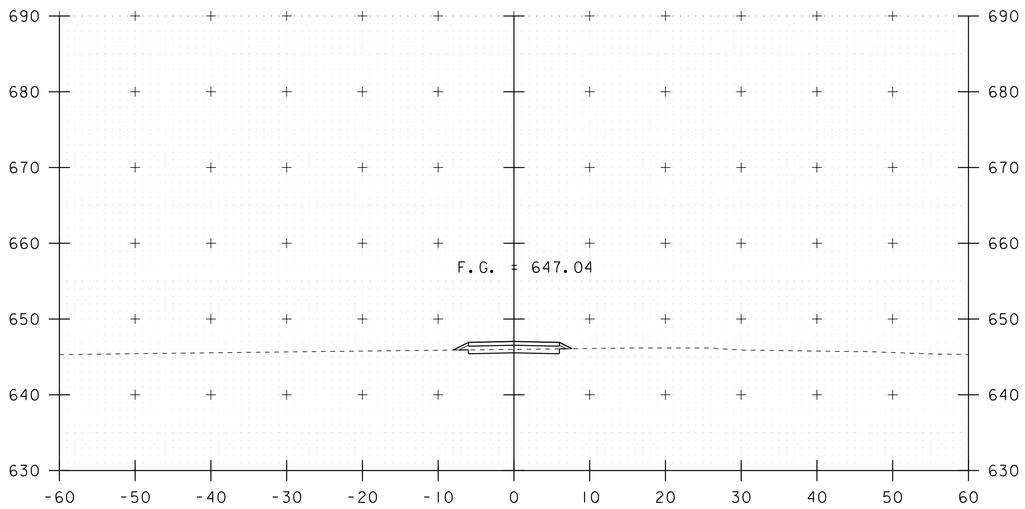

22+50

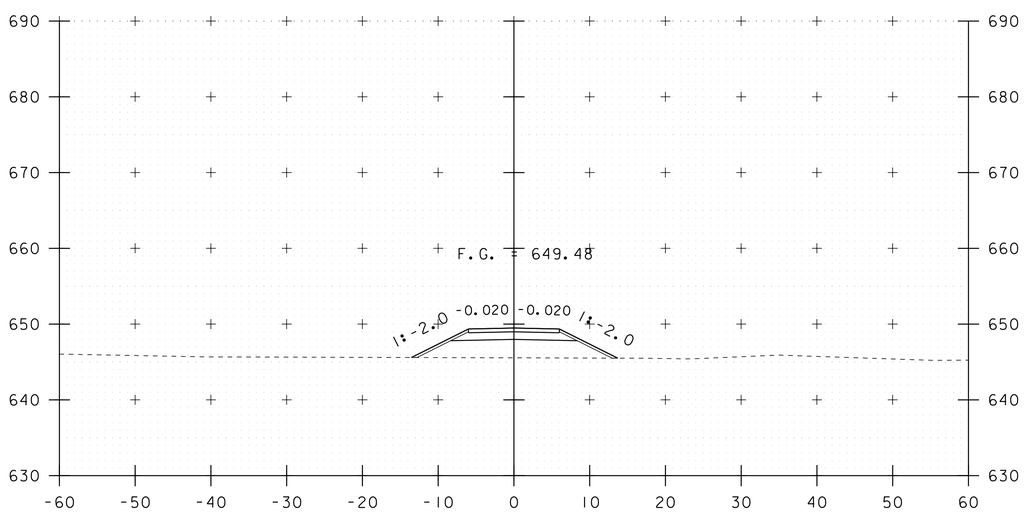

22+00

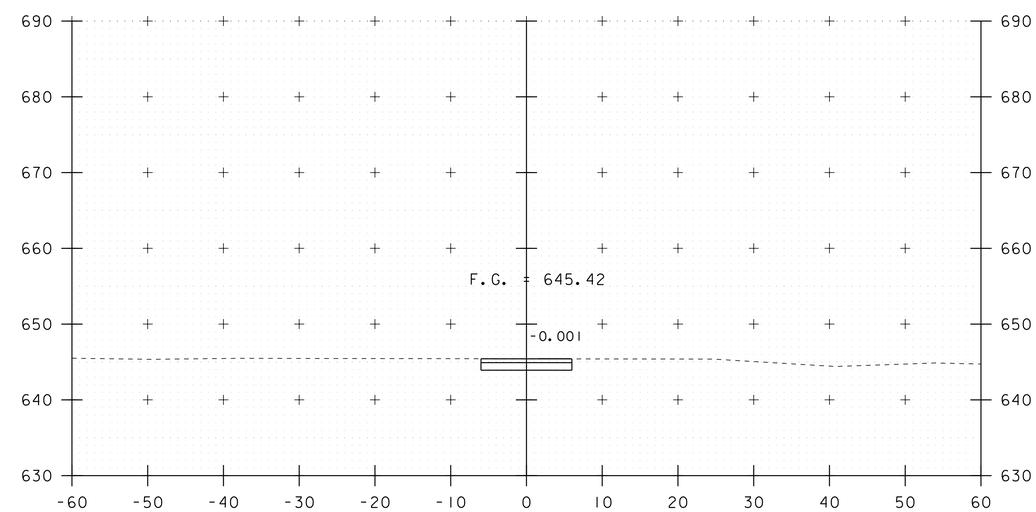

23+00
END FIELD DRIVE

STA. 22+00 TO STA. 23+00

PROJECT NAME: MORRISTOWN	
PROJECT NUMBER: BRO 0240(3)S	
FILE NAME: 78f329xs.dgn	PLOT DATE: 16-NOV-2015
PROJECT LEADER: C. CARLSON	DRAWN BY: G. ROKES
DESIGNED BY: N. VANDENBERG	CHECKED BY: J. LACROIX
FIELD DRIVE SECTIONS SHEET 2	SHEET 114 OF 148

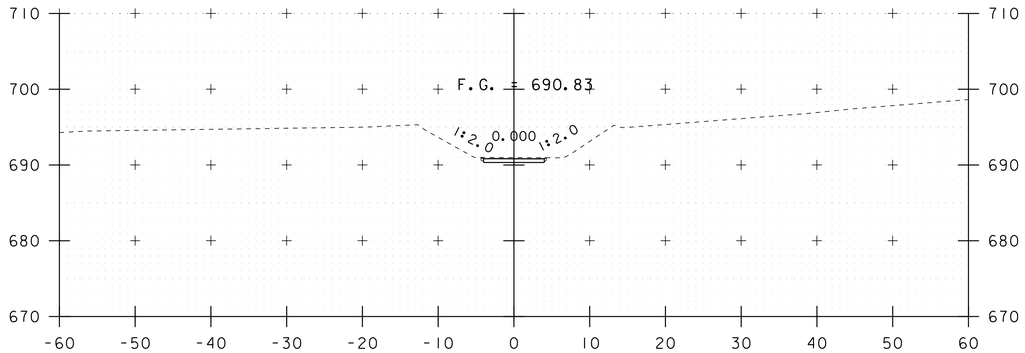

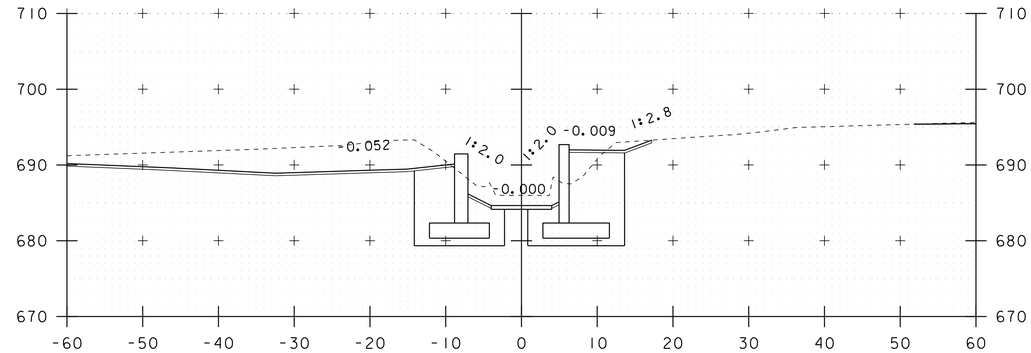

1+50

1+75

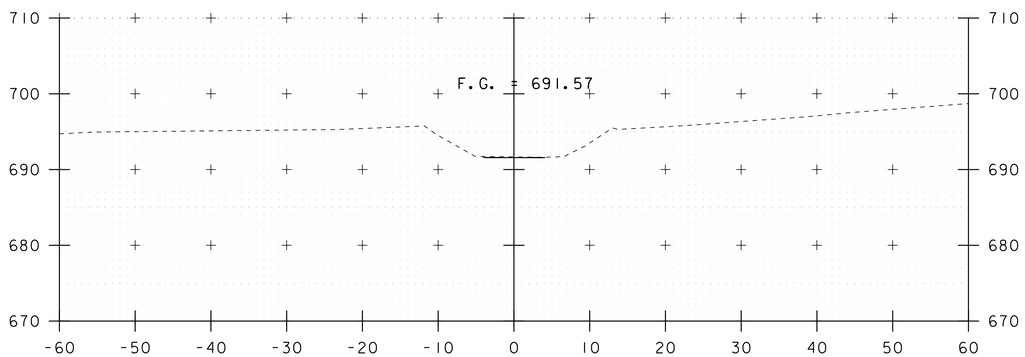

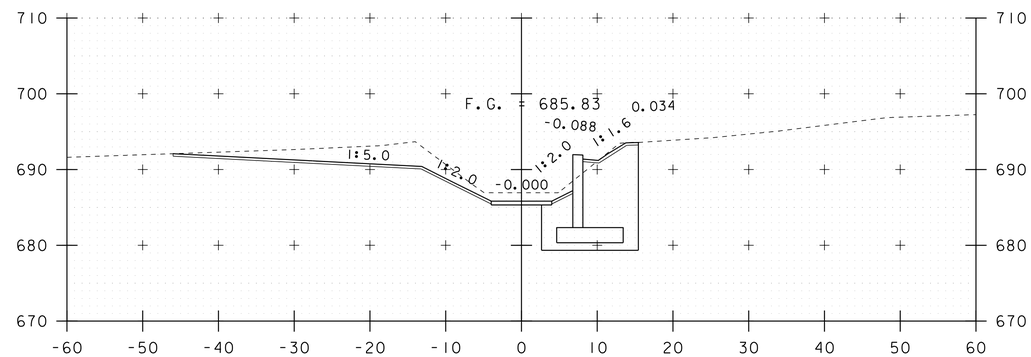

1+47

1+70

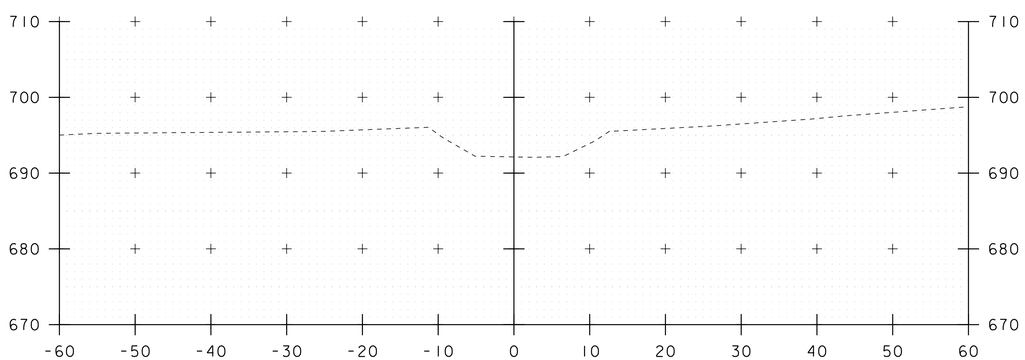

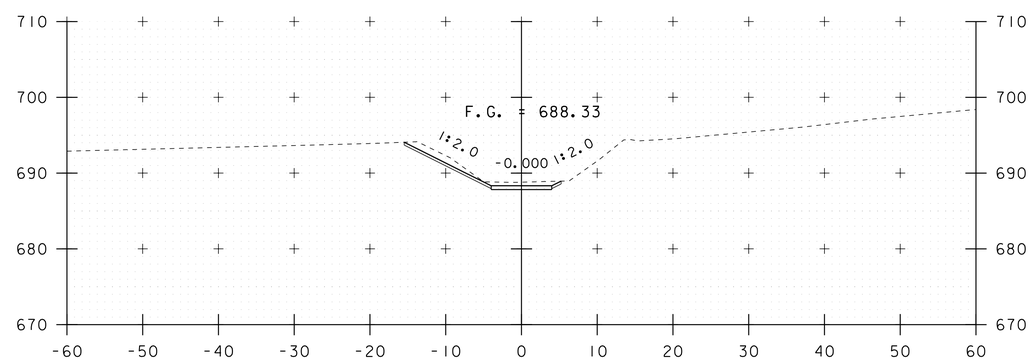

1+45

1+60

STA. 1+45 TO STA. 1+75

PROJECT NAME: MORRISTOWN	
PROJECT NUMBER: BRO 0240(3)S	
FILE NAME: 78f329xs.dgn	PLOT DATE: 16-NOV-2015
PROJECT LEADER: C. CARLSON	DRAWN BY: G. ROKES
DESIGNED BY: N. VANDENBERG	CHECKED BY: J. LACROIX
CATTLE PASS SECTIONS SHEET 1	SHEET 115 OF 148

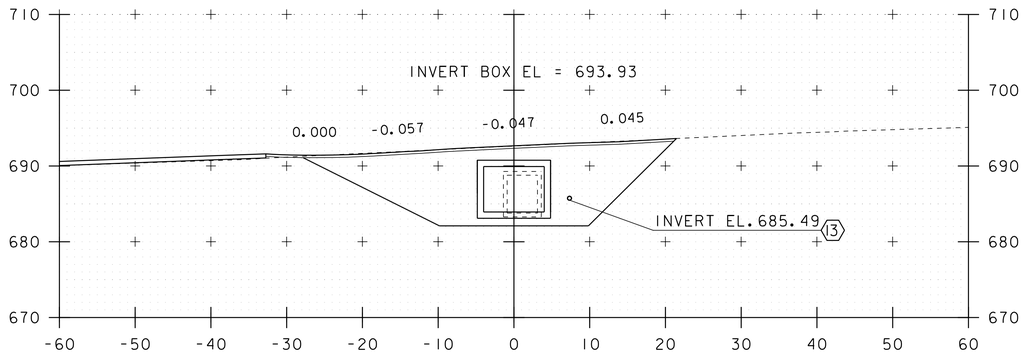

2+20

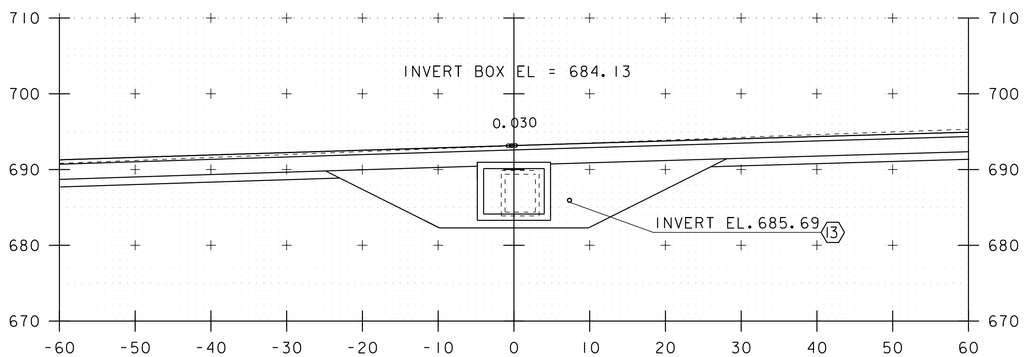

2+00

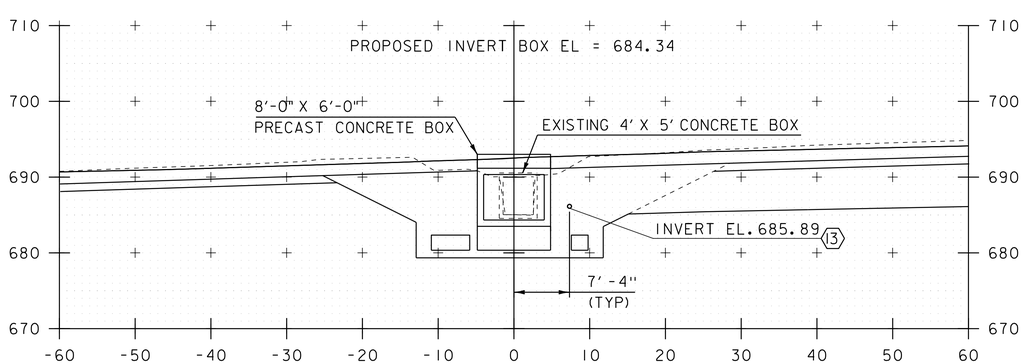

1+80

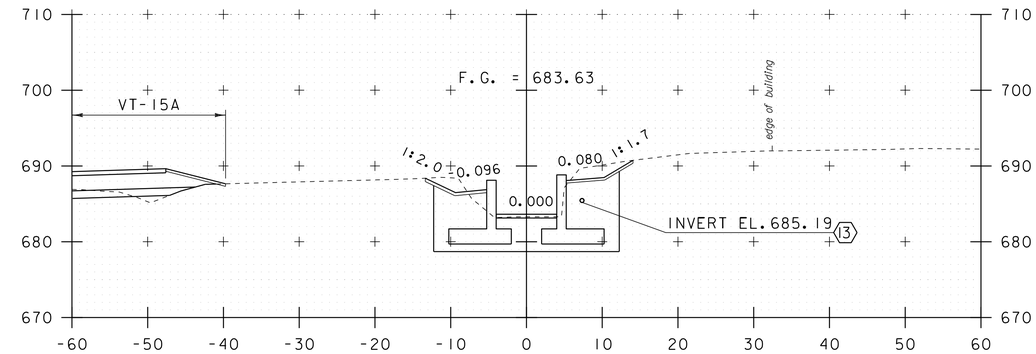

2+50

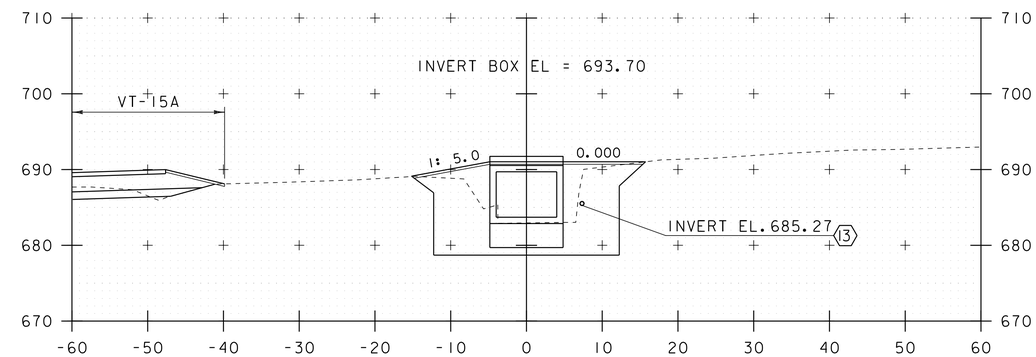

2+43

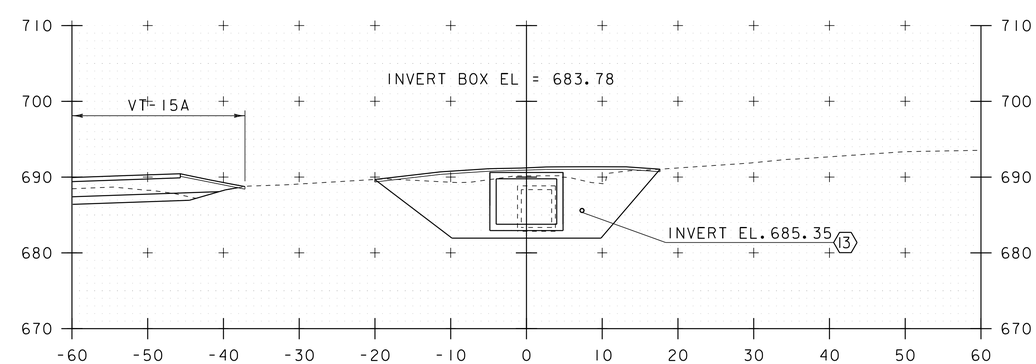

2+35

PROPOSED
8'-0" X 6'-0"
PRECAST CONCRETE BOX
STARTS AT STA. 1+79.00

EXISTING 4' X 5' CONCRETE BOX
STARTS AT STA. 1+80.31

(13) NEW UNDERDRAIN PIPE (6 INCHES)

EXISTING 4' X 5' CONCRETE BOX
ENDS AT STA. 2+35.73

STA. 1+80 TO STA. 2+50

PROJECT NAME: MORRISTOWN	
PROJECT NUMBER: BRO 0240(3)S	
FILE NAME: 78f329xs.dgn	PLOT DATE: 16-NOV-2015
PROJECT LEADER: C. CARLSON	DRAWN BY: G. ROKES
DESIGNED BY: N. VANDENBERG	CHECKED BY: J. LACROIX
CATTLE PASS SECTIONS SHEET 2	SHEET 116 OF 148

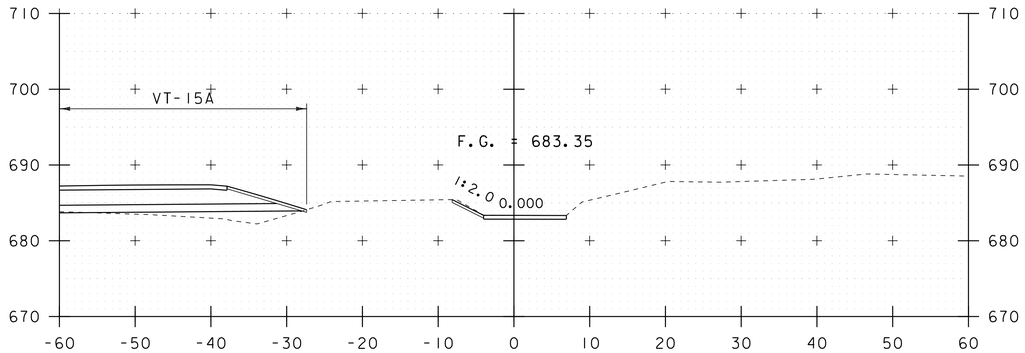

2+88

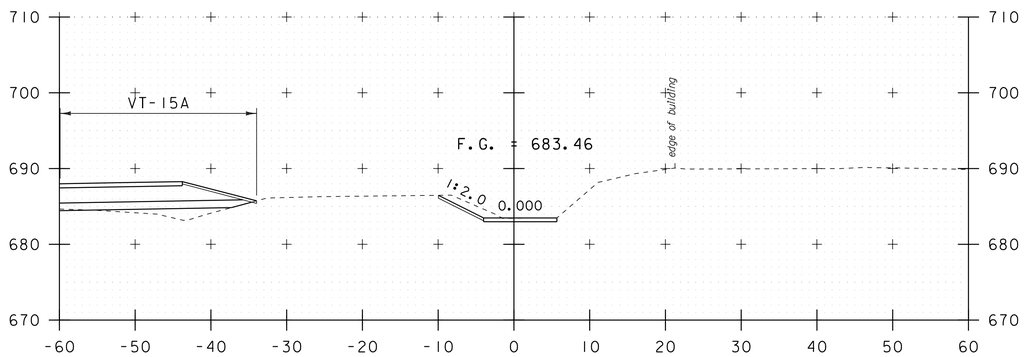

2+75

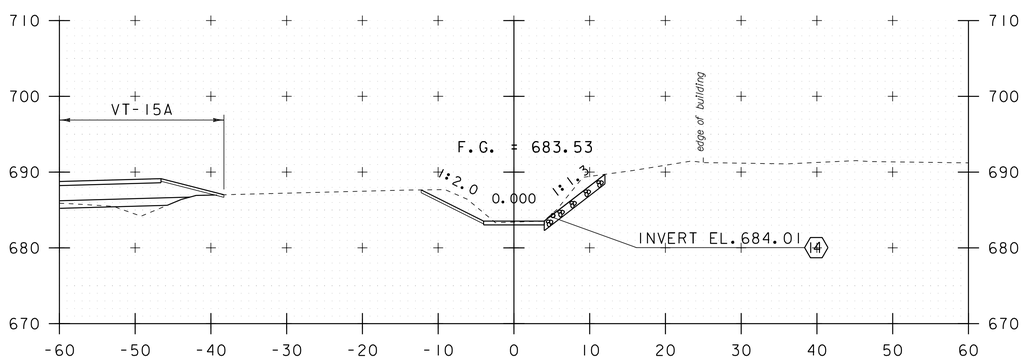

2+60

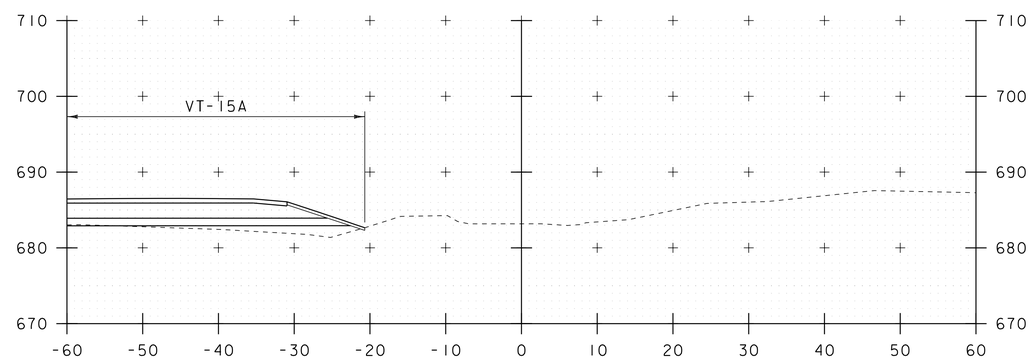

3+00

14 NEW CARRIER PIPE (6 INCH)
OUTLET AT STA. 2+62.30 RT
INVERT EL. 683.51

STA. 2+60 TO STA. 3+00

PROJECT NAME: MORRISTOWN	
PROJECT NUMBER: BRO 0240(3)S	
FILE NAME: 78f329xs.dgn	PLOT DATE: 16-NOV-2015
PROJECT LEADER: C. CARLSON	DRAWN BY: G. ROKES
DESIGNED BY: N. VANDENBERG	CHECKED BY: J. LACROIX
CATTLE PASS SECTIONS SHEET 3	SHEET 117 OF 148

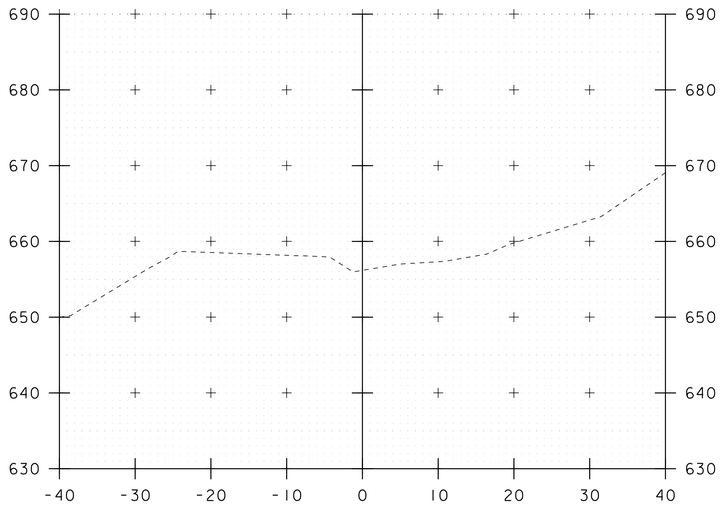

401+20

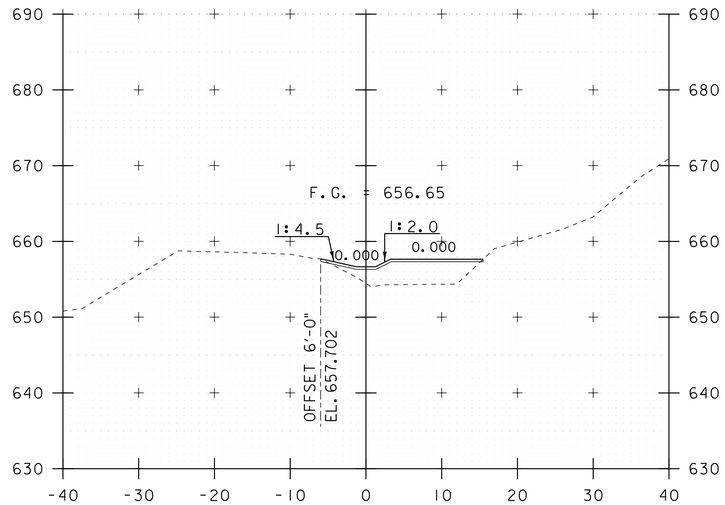

401+50

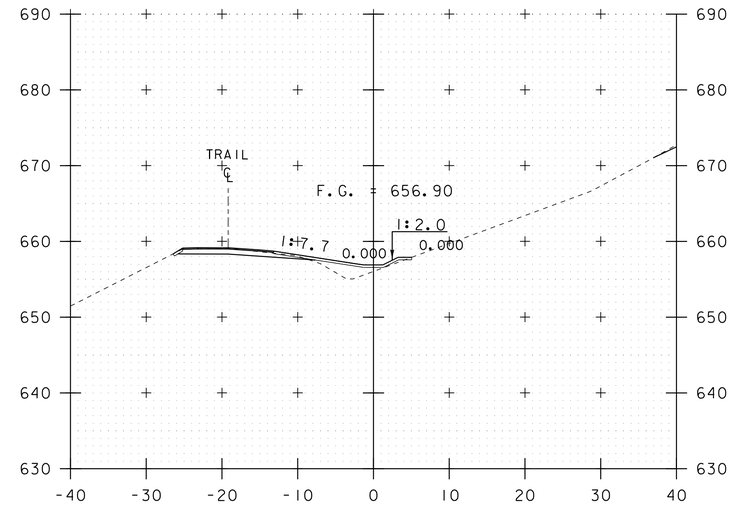

402+00

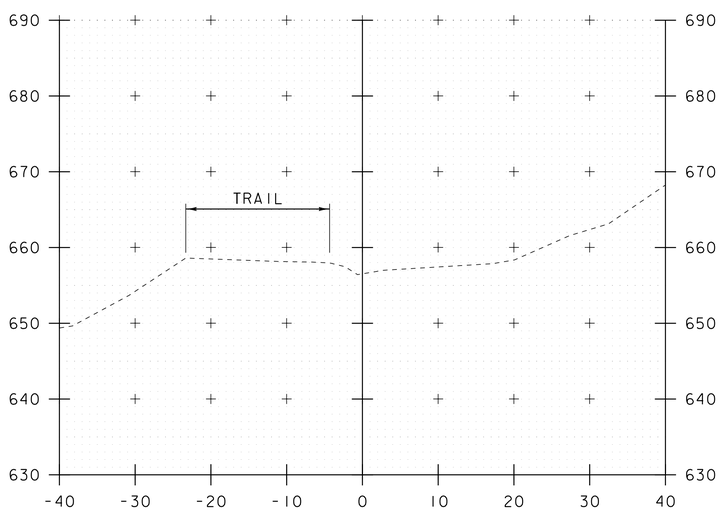

401+10

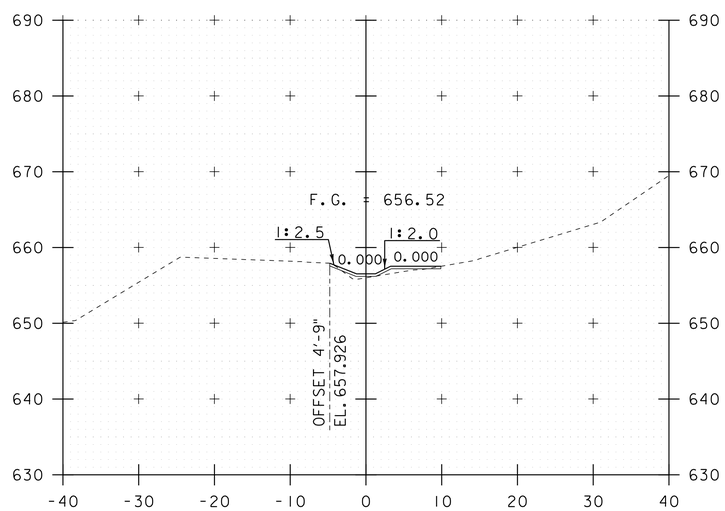

401+25

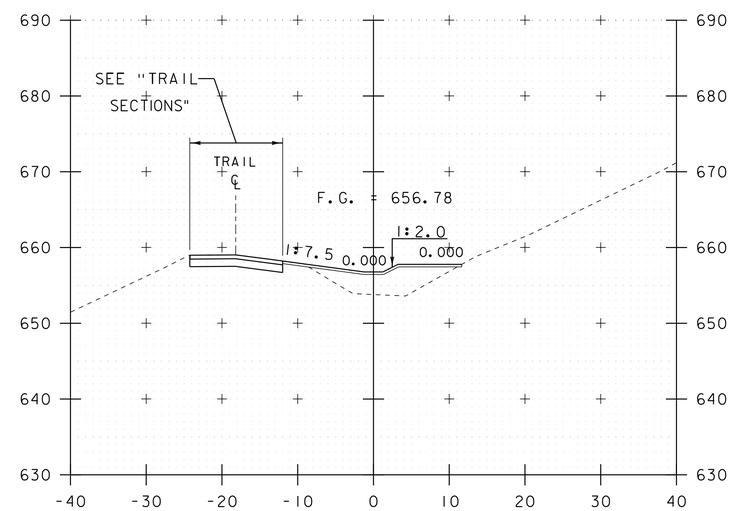

401+75

STA. 401+10 TO STA. 402+00

PROJECT NAME: MORRISTOWN	
PROJECT NUMBER: BRO 0240(3)S	
FILE NAME: 78f329xs.dgn	PLOT DATE: 16-NOV-2015
PROJECT LEADER: C. CARLSON	DRAWN BY: G. ROKES
DESIGNED BY: N. VANDENBERG	CHECKED BY: J. LACROIX
GRASS TREATMENT SWALE SECTIONS SHEET 1	SHEET 118 OF 148

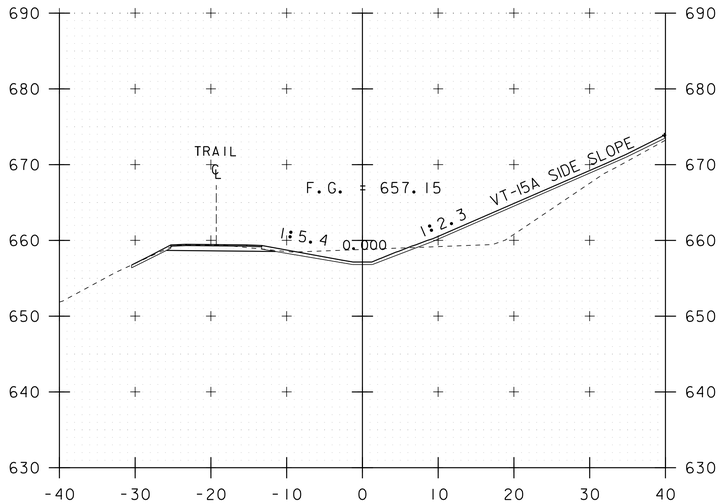

402+50

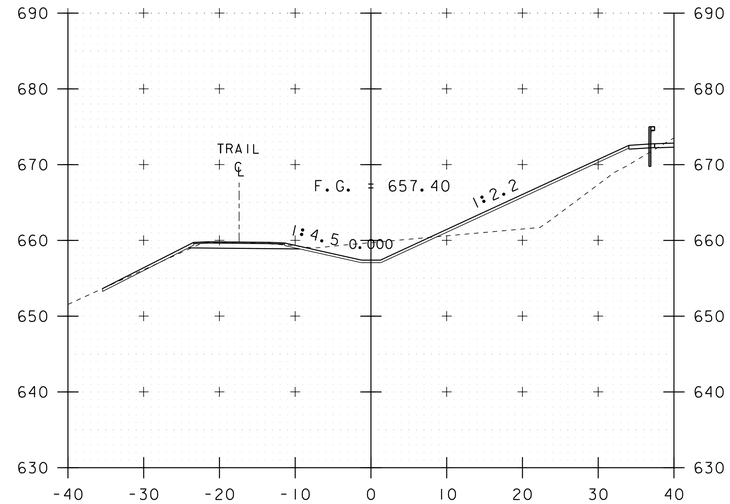

403+00

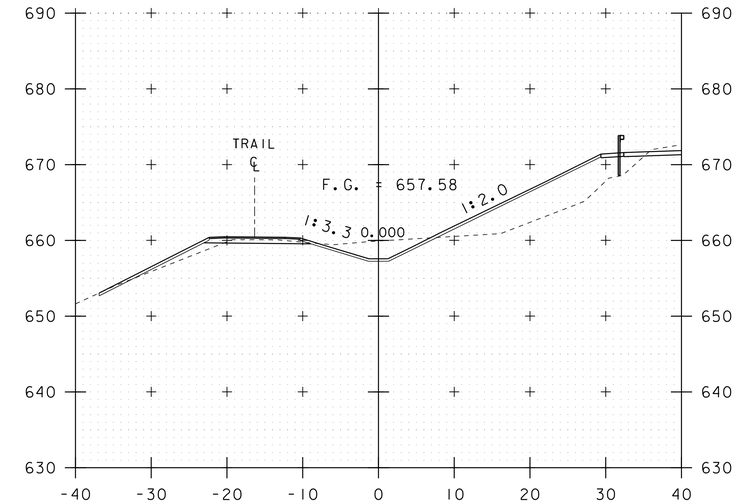

403+35

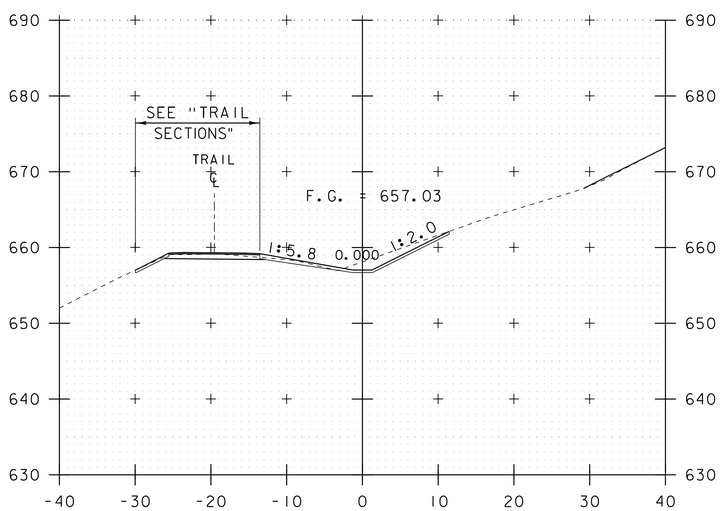

402+25

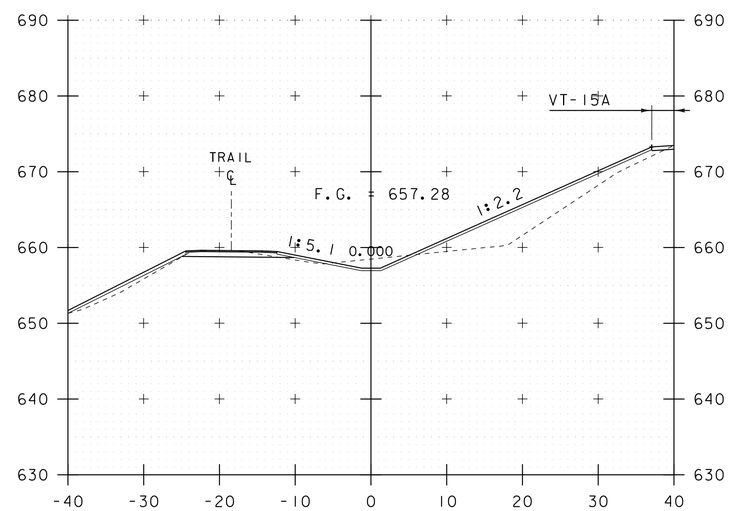

402+75

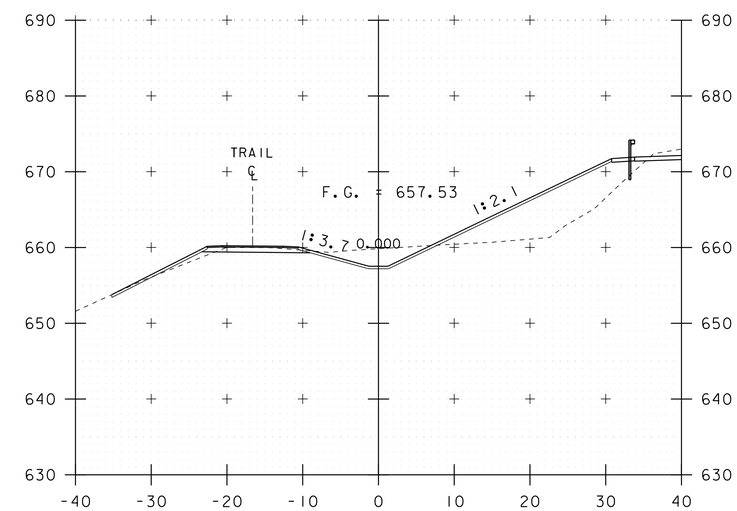

403+25

STA. 402+25 TO STA. 403+35

PROJECT NAME: MORRISTOWN	
PROJECT NUMBER: BRO 0240(3)S	
FILE NAME: 78f329xs.dgn	PLOT DATE: 16-NOV-2015
PROJECT LEADER: C. CARLSON	DRAWN BY: G. ROKES
DESIGNED BY: N. VANDENBERG	CHECKED BY: J. LACROIX
GRASS TREATMENT SWALE SECTIONS SHEET 2	SHEET 119 OF 148

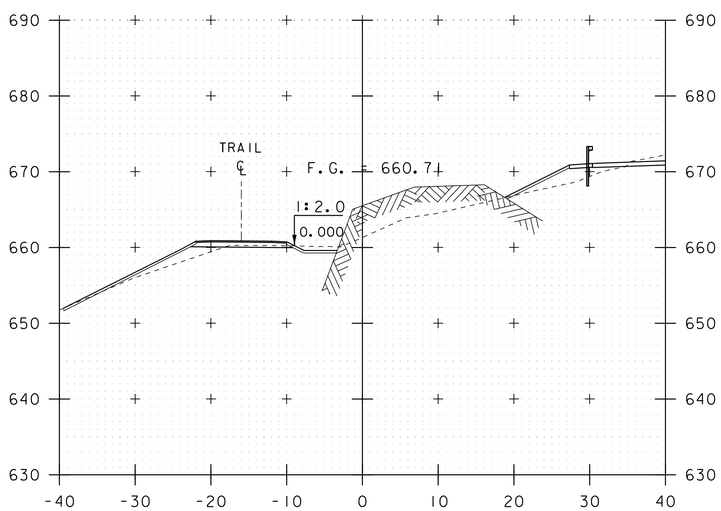

403+61

STA. 403+50 TO STA. 403+50

PROJECT NAME: MORRISTOWN	
PROJECT NUMBER: BRO 0240(3)S	
FILE NAME: 78f329xs.dgn	PLOT DATE: 16-NOV-2015
PROJECT LEADER: C. CARLSON	DRAWN BY: G. ROKES
DESIGNED BY: N. VANDENBERG	CHECKED BY: J. LACROIX
GRASS TREATMENT SWALE SECTIONS SHEET 3	SHEET 120 OF 148

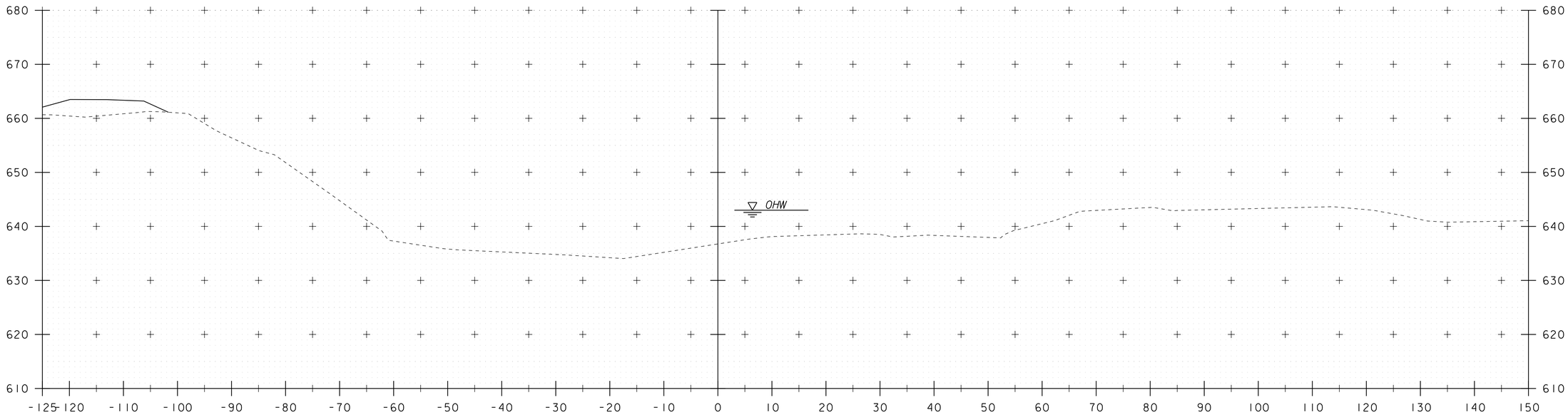

300+75

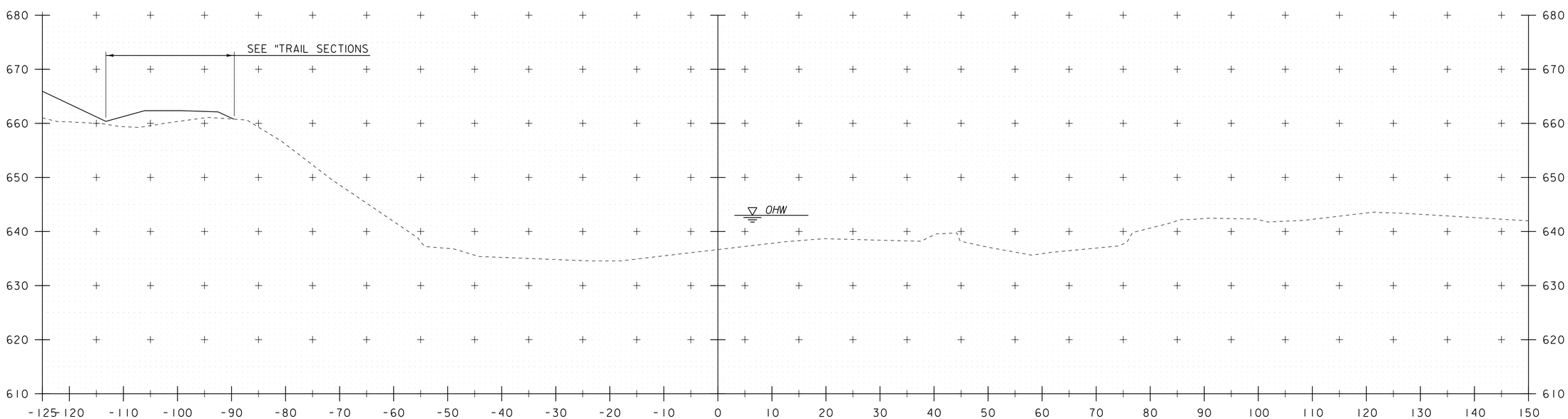

300+50

STA. 300+50 TO STA. 300+75

PROJECT NAME: MORRISTOWN	
PROJECT NUMBER: BRO 0240(3)S	
FILE NAME: 78f329xs.dgn	PLOT DATE: 16-NOV-2015
PROJECT LEADER: C. CARLSON	DRAWN BY: G. ROKES
DESIGNED BY: N. VANDENBERG	CHECKED BY: J. LACROIX
CHANNEL SECTIONS SHEET 1	SHEET 121 OF 148

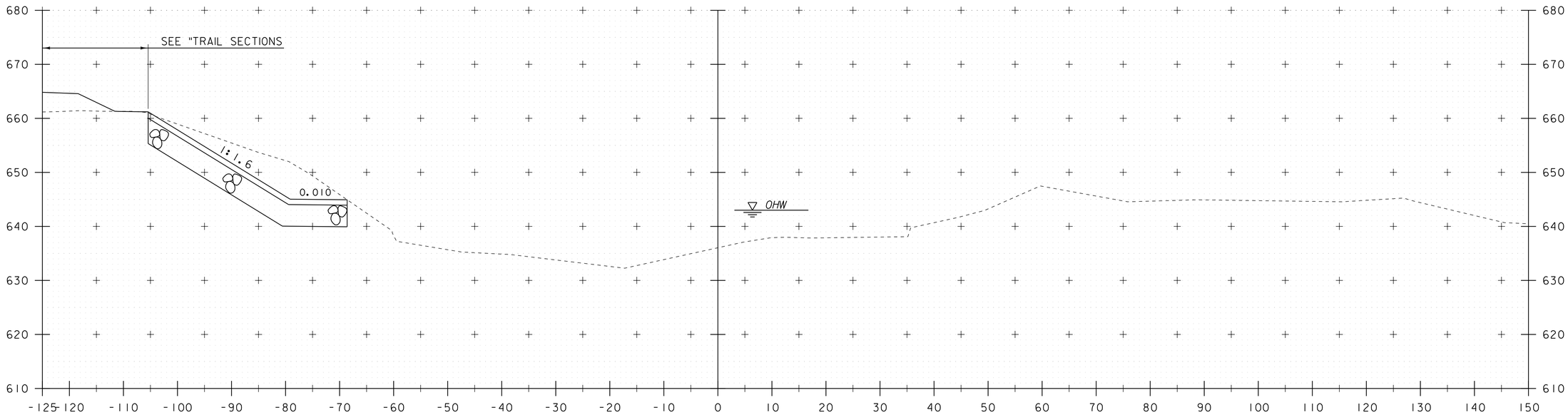

301+00

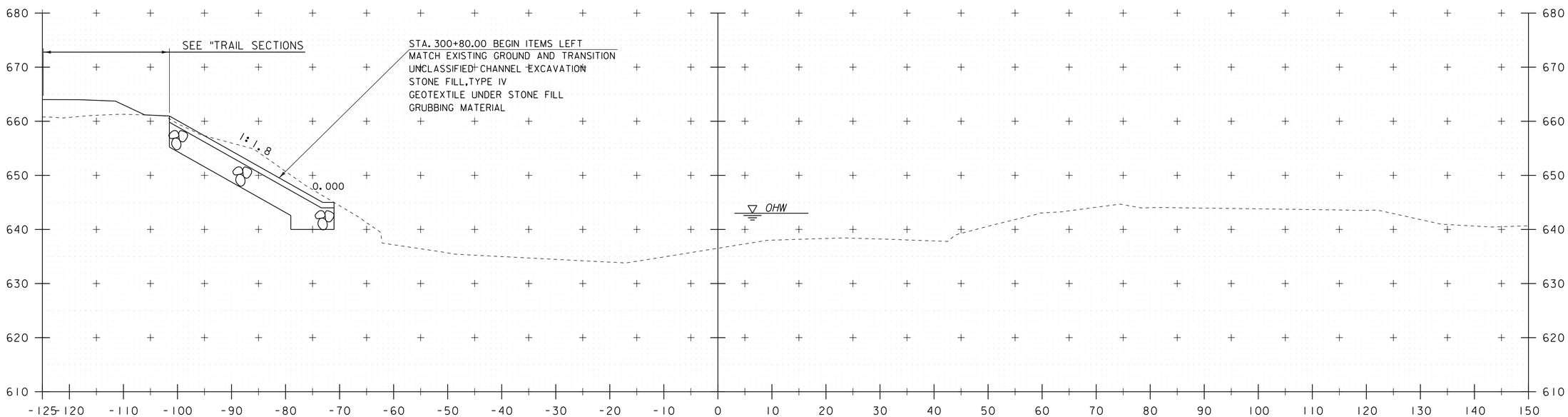

300+85

STA. 300+85 TO STA. 301+00

PROJECT NAME: MORRISTOWN	
PROJECT NUMBER: BRO 0240(3)S	
FILE NAME: 78f329xs.dgn	PLOT DATE: 16-NOV-2015
PROJECT LEADER: C. CARLSON	DRAWN BY: G. ROKES
DESIGNED BY: N. VANDENBERG	CHECKED BY: J. LACROIX
CHANNEL SECTIONS SHEET 2	SHEET 122 OF 148

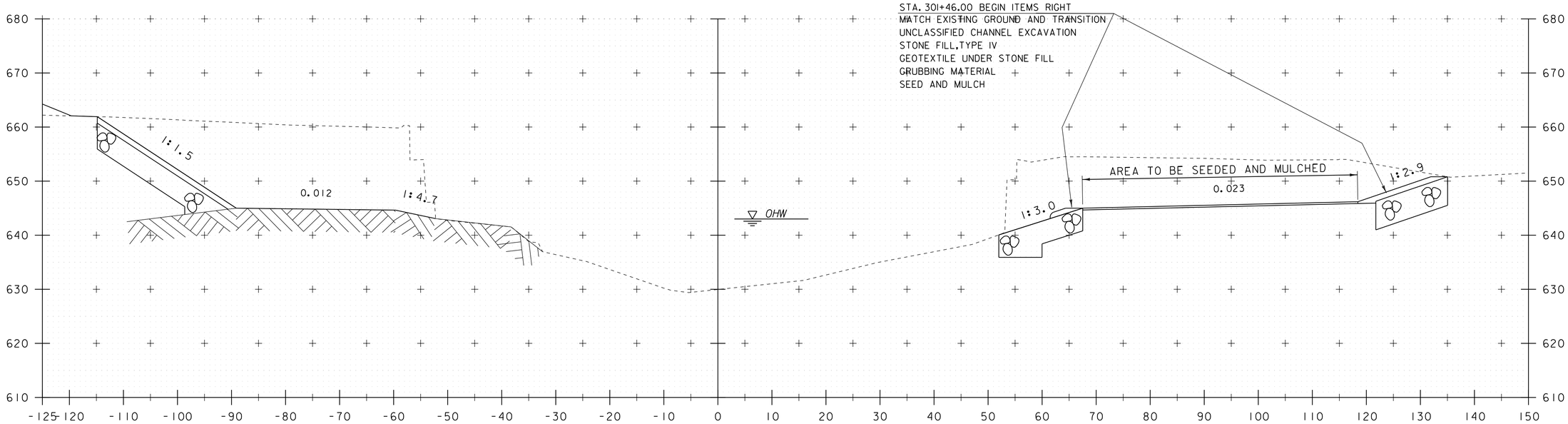

301+40

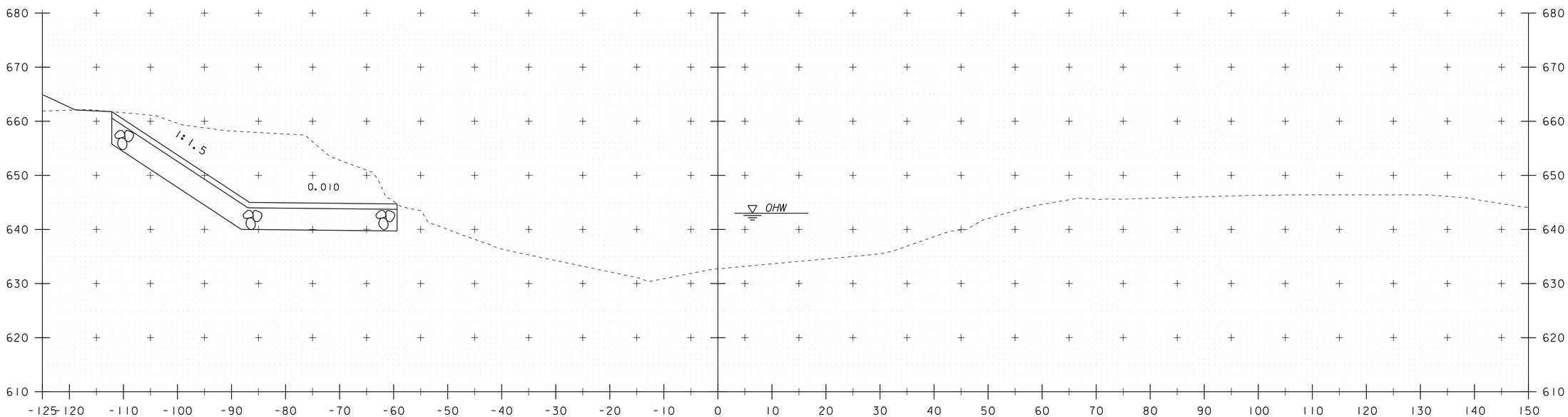

301+25

PROJECT NAME: MORRISTOWN	
PROJECT NUMBER: BRO 0240(3)S	
FILE NAME: 78f329xs.dgn	PLOT DATE: 16-NOV-2015
PROJECT LEADER: C. CARLSON	DRAWN BY: G. ROKES
DESIGNED BY: N. VANDENBERG	CHECKED BY: J. LACROIX
CHANNEL SECTIONS SHEET 3	SHEET 123 OF 148

STA. 301+25 TO STA. 301+40

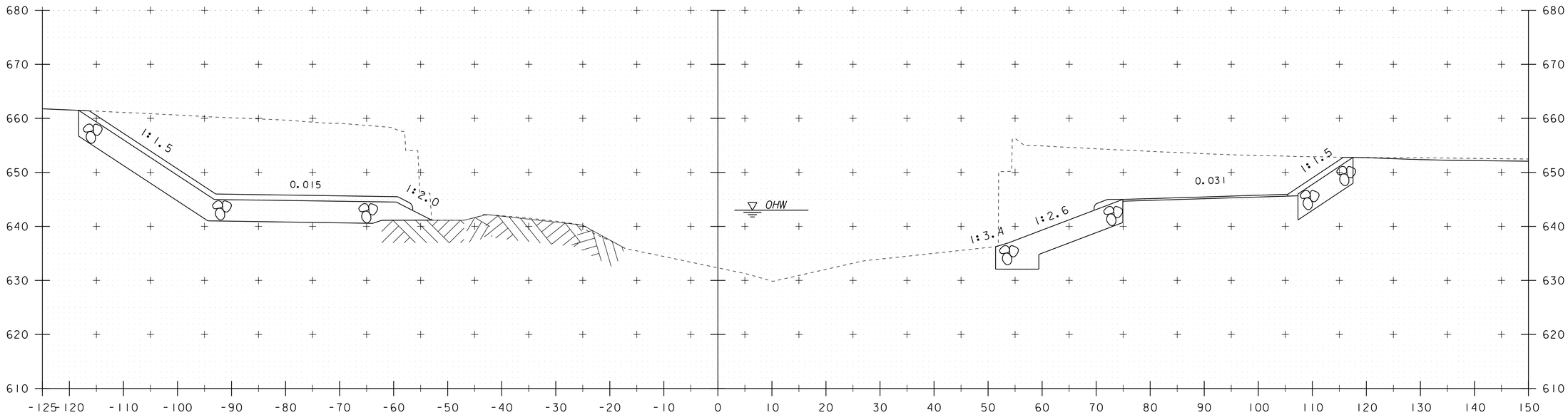

301+65

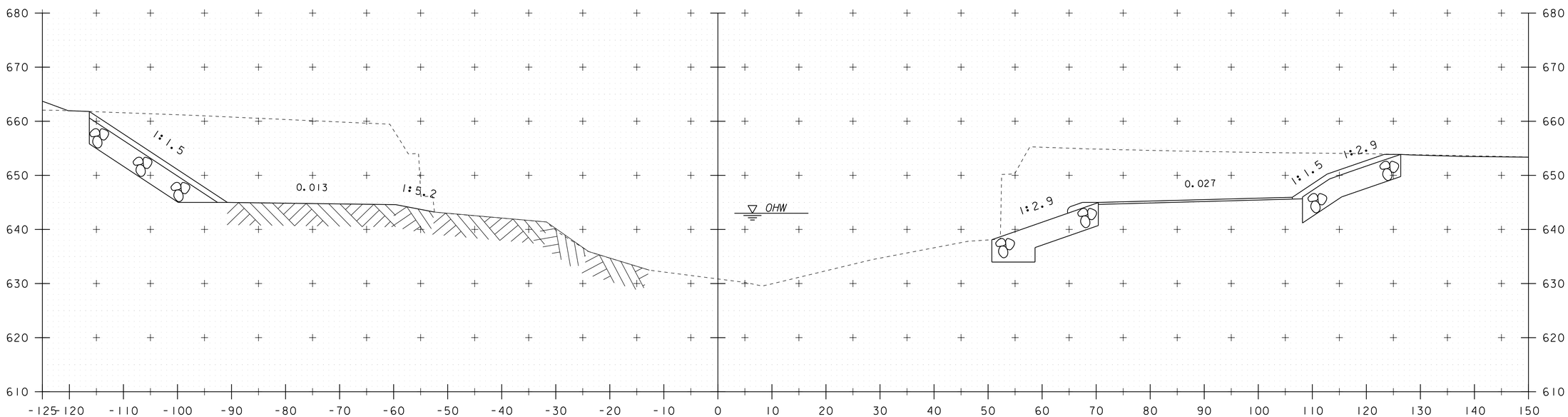

301+50

STA. 301+50 TO STA. 301+65

PROJECT NAME: MORRISTOWN	
PROJECT NUMBER: BRO 0240(3)S	
FILE NAME: 78f329xs.dgn	PLOT DATE: 16-NOV-2015
PROJECT LEADER: C. CARLSON	DRAWN BY: G. ROKES
DESIGNED BY: N. VANDENBERG	CHECKED BY: J. LACROIX
CHANNEL SECTIONS SHEET 4	SHEET 124 OF 148

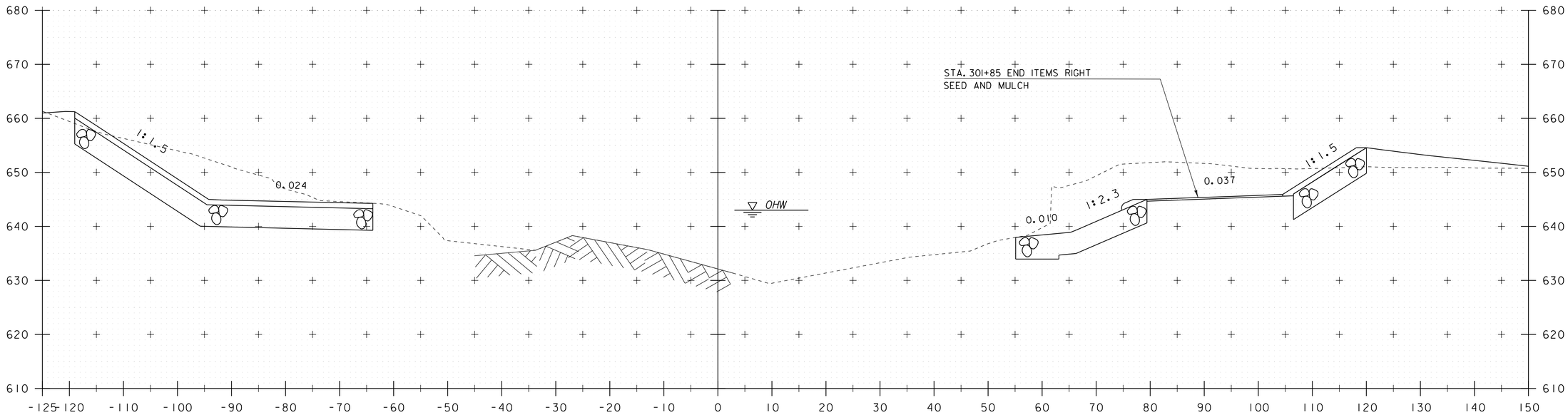

301+80

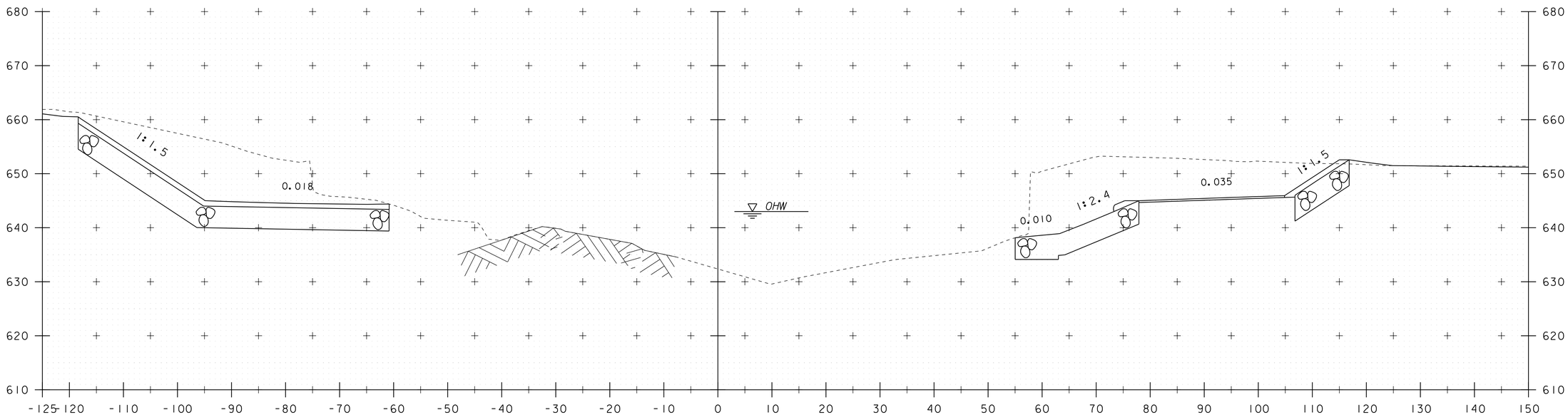

301+75

PROJECT NAME: MORRISTOWN	
PROJECT NUMBER: BRO 0240(3)S	
FILE NAME: 78f329xs.dgn	PLOT DATE: 16-NOV-2015
PROJECT LEADER: C. CARLSON	DRAWN BY: G. ROKES
DESIGNED BY: N. VANDENBERG	CHECKED BY: J. LACROIX
CHANNEL SECTIONS SHEET 5	SHEET 125 OF 148

STA. 301+75 TO STA. 301+80

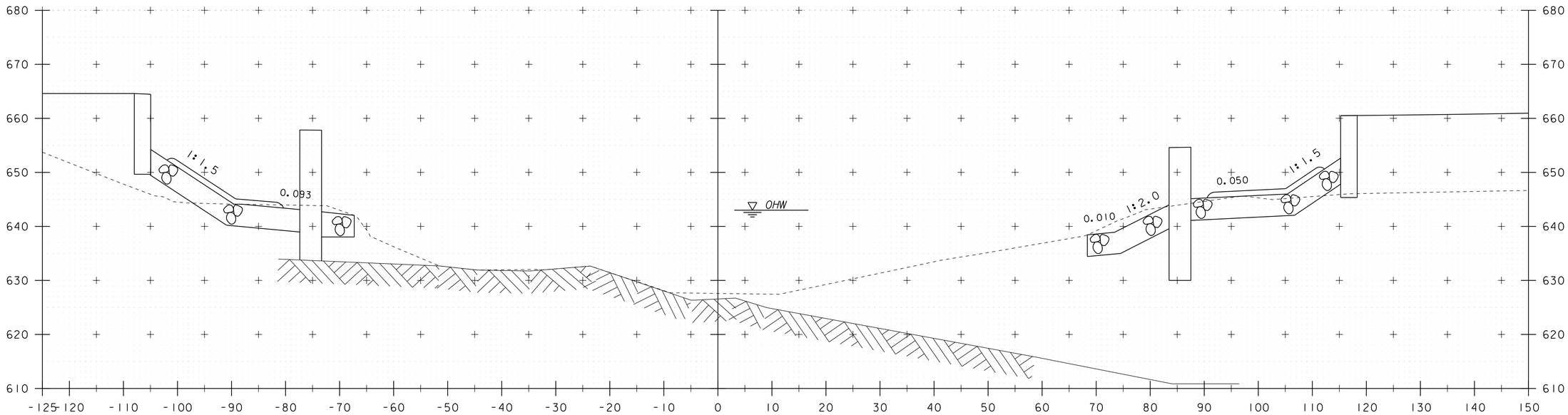

302+00

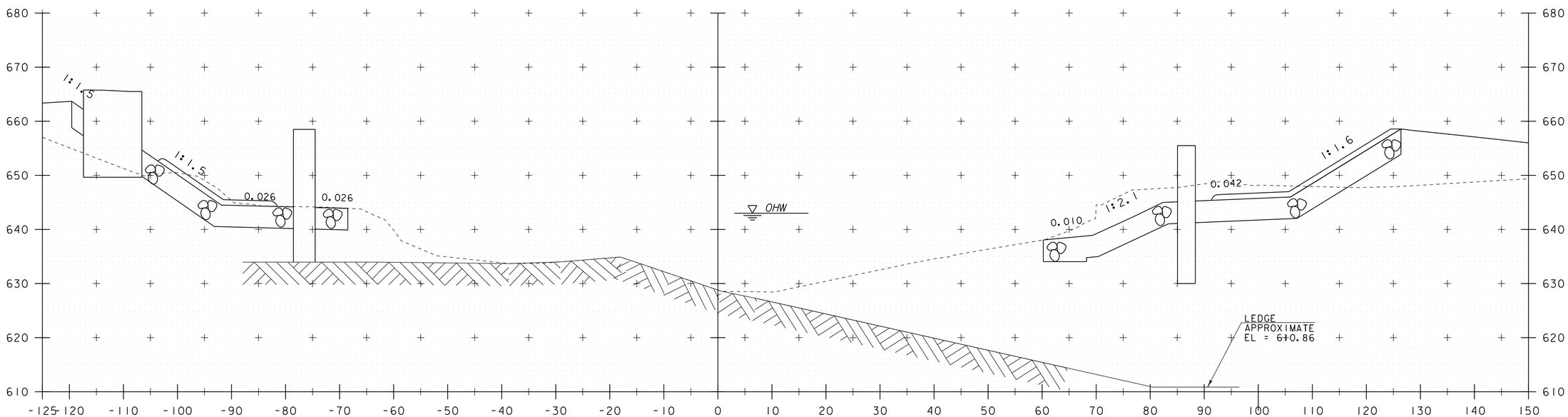

301+90

STA. 301+90 TO STA. 302+00

PROJECT NAME: MORRISTOWN	
PROJECT NUMBER: BRO 0240(3)S	
FILE NAME: 78f329xs.dgn	PLOT DATE: 16-NOV-2015
PROJECT LEADER: C. CARLSON	DRAWN BY: G. ROKES
DESIGNED BY: N. VANDENBERG	CHECKED BY: J. LACROIX
CHANNEL SECTIONS SHEET 6	SHEET 126 OF 148

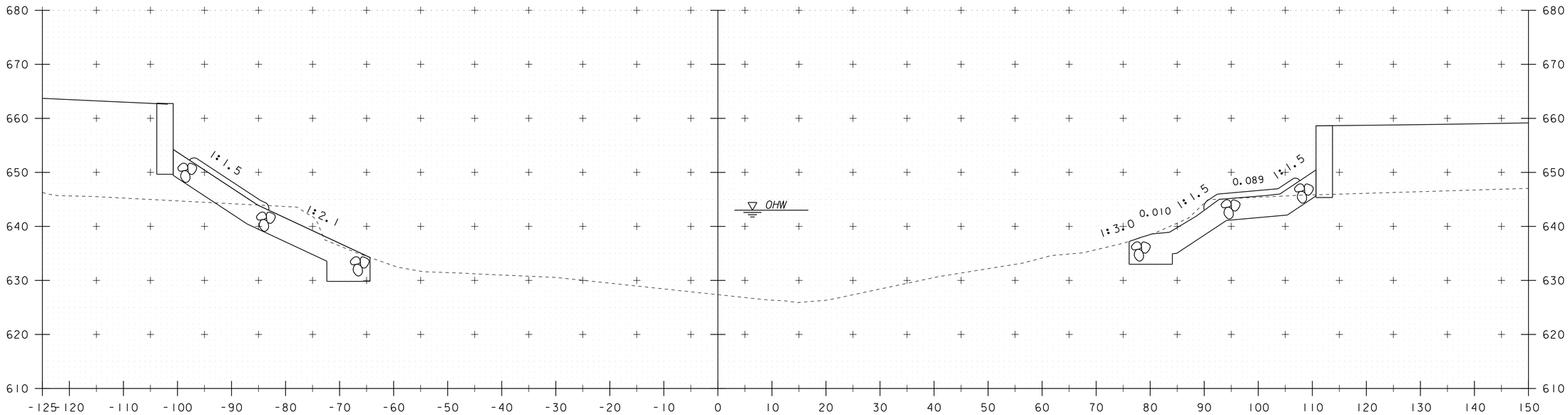

302+25

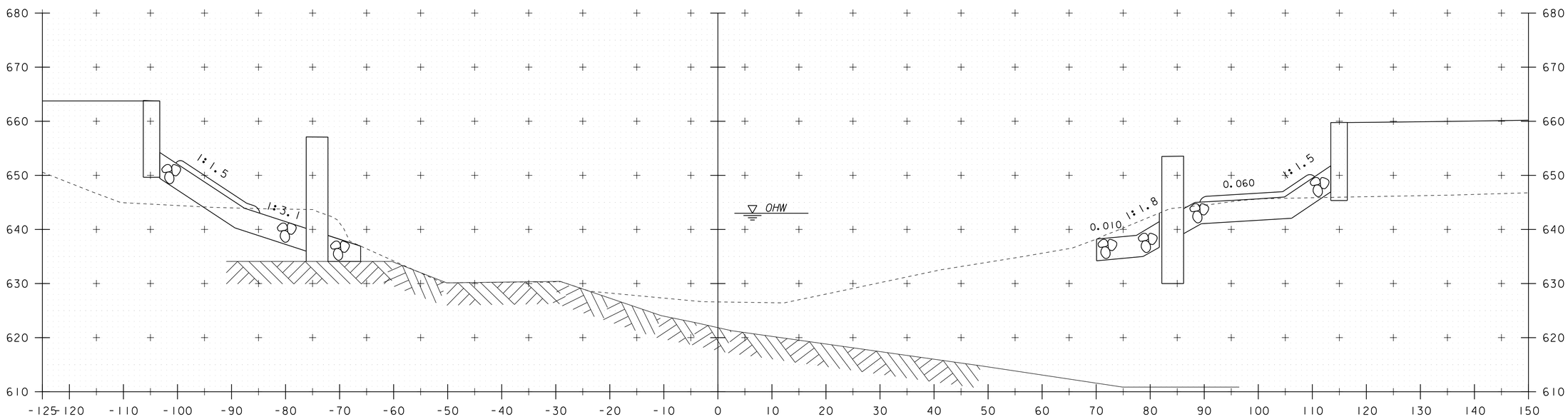

302+10

STA. 302+10 TO STA. 302+25

PROJECT NAME: MORRISTOWN	
PROJECT NUMBER: BRO 0240(3)S	
FILE NAME: 78f329xs.dgn	PLOT DATE: 16-NOV-2015
PROJECT LEADER: C. CARLSON	DRAWN BY: G. ROKES
DESIGNED BY: N. VANDENBERG	CHECKED BY: J. LACROIX
CHANNEL SECTIONS SHEET 7	SHEET 127 OF 148

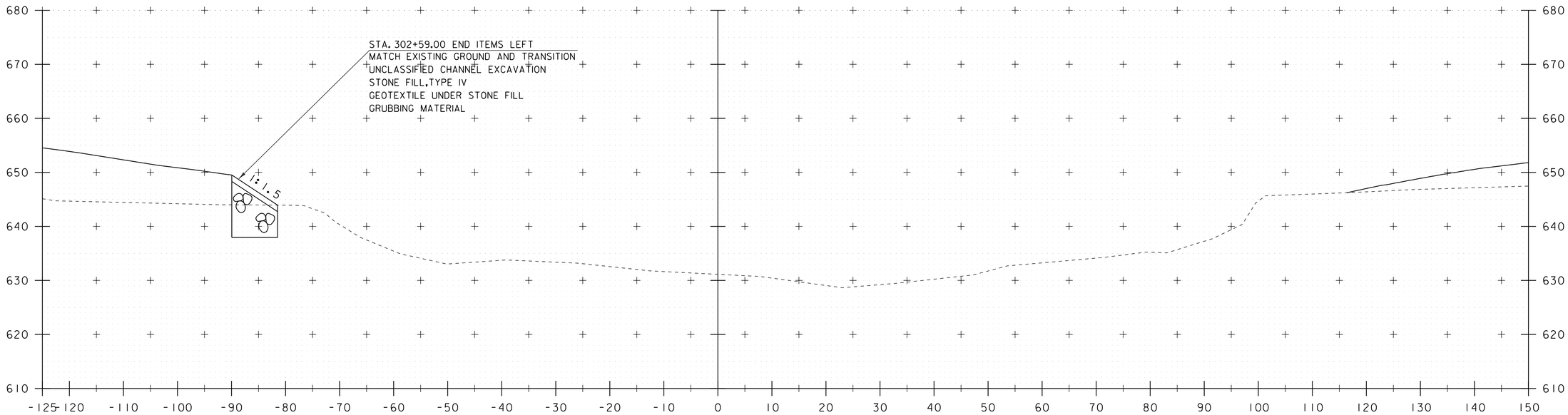

302+50

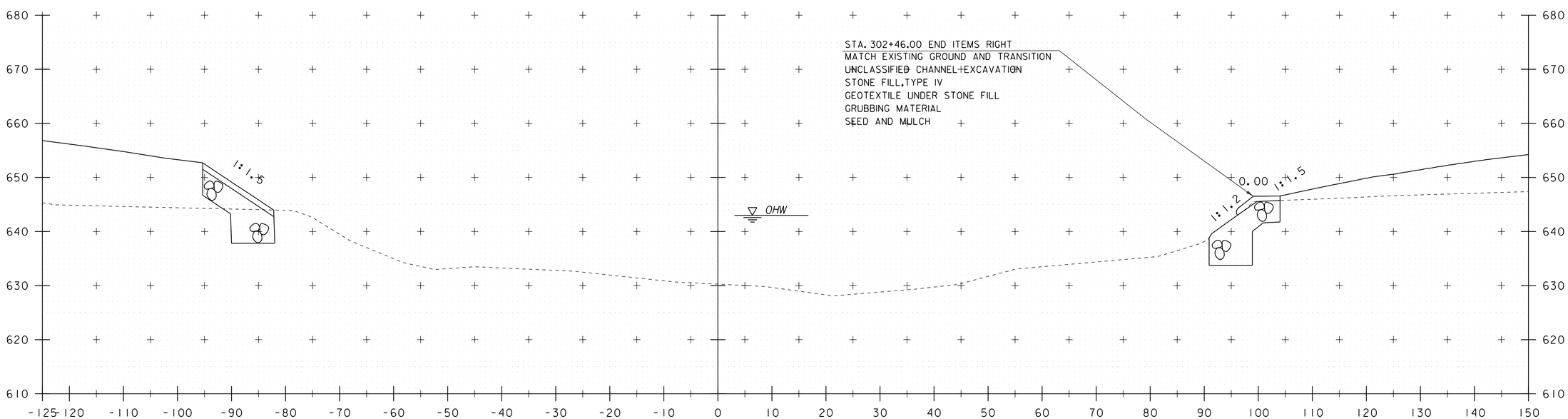

302+45

STA. 302+45 TO STA. 302+50

PROJECT NAME: MORRISTOWN	
PROJECT NUMBER: BRO 0240(3)S	
FILE NAME: 78f329xs.dgn	PLOT DATE: 16-NOV-2015
PROJECT LEADER: C. CARLSON	DRAWN BY: G. ROKES
DESIGNED BY: N. VANDENBERG	CHECKED BY: J. LACROIX
CHANNEL SECTIONS SHEET 8	SHEET 128 OF 148

EROSION CONTROL NARRATIVE

1. **PROJECT DESCRIPTION**
THE MORRISTOWN PROJECT IS A COMBINATION OF TWO PROJECTS WHICH ARE THE BRS 0240(3)S BRIDGE PROJECT AND THE STP HES 030-2(28) VT-15 TO VT-15A INTERSECTION PROJECT.
THE BRS 0240 (3)S BRIDGE PROJECT CONSISTS OF THE CONSTRUCTION OF A NEW 224 FT LONG, 3 SPAN STEEL GIRDER BRIDGE IN MORRISTOWN, VERMONT. BEGINNING AT STA. 104+75.00, ON VT ROUTE 15A, AND EXTENDING EAST/ NORTH EAST TO STA 115+0.00 AT WHICH POINT PROJECT BRS 0240 (3)S WILL END AND PROJECT STP HES 030-2(28) WILL BEGIN . THE BRS 0240 (3)S BRIDGE PROJECT WORK TO BE PERFORMED INCLUDES REMOVAL OF EXISTING BRIDGE, CONSTRUCTION OF NEW SUPERSTRUCTURE AND SUBSTRUCTURE OF NEW BRIDGE, GRADING, DRAINAGE, SUBBASE, PAVEMENT, AND LANDSCAPING. ADDITIONAL WORK INCLUDES ROADWAY WORK TO THE EXISTING TOWN HIGHWAY 22 AND RECONSTRUCTION WORK OF AN EXISTING MULTI-USE TRAIL ALONG THE FORMER RAILROAD TRACKS. WORK UNDER THIS PORTION OF THE PROJECT INCLUDES GRADING, DRAINAGE, SUBBASE, PAVEMENT, LANDSCAPING AND OTHER INCIDENTAL ITEMS.
THE STP HES 030-2(28) INTERSECTION PROJECT WILL BEGIN AT STA. 115+00.00 ALONG VT-15A AND PROCEED NORTH EASTERLY TEMINATING AT THE INSTERSECTION OF VT-15 STA. 118+33.00.
THE PROJECT WILL ALSO START ALONG VT-15 AT STA. 204+00.00 PROCEED EAST ALONG VT-15 PROCEEDING 900 FEET AND END AT STA. 214+00.00. WORK TO BE PERFORMED INCLUDES ALLGRADING, DRAINAGE, SUBBASE, PAVEMENT, AND LANDSCAPING. ADDITIONAL WORK INCLUDES ALL DRIVES AND INCUDES THE REPLACEMNTOF AN EXISTING CATTEL UNDERPASS UNDER VT-15, WORK UNDER THIS PORTION OF THE PROJECT INCLUDES GRADING, DRAINAGE, SUBBASE, PAVEMENT, LANDSCAPING AND OTHER INCIDENTAL ITEMS.

2. **AREA OF DISTURBANCE**
THE TOTAL AREA OF THIS PROJECT INSIDE OF THE PROJECT DEMARCATION FENCE IS 6.30 ACRES.
SEE SECTION #5 "DRAINAGE AREAS AND DISCHARGE POINTS" AND "DRAINAGE AREAS SUMMARY" OF DISTURBANCES OF .5 ACRE OR GREATER.

3. **CONSTRUCTION SEQUENCE**
THE CONTRACTOR SHALL SEQUENCE CONSTRUCTION ACTIVITIES TO MINIMIZE THE EXTENT OF DISTURBED SOILS LEFT OPEN TO EROSION AT ANY GIVEN TIME. A PROPOSED GENERAL SEQUENCE FOR EACH OF THE MAJOR CONSTRUCTION ACTIVITIES IS AS FOLLOWS:

- **BRIDGE OVER LAMOILLE RIVER**
  1) ESTABLISH PERIMETER CONTROLS AND MARK BOUNDARIES FOR SENSITIVE RESOURCE AREAS, SUCH AS WETLANDS AND RIPARIAN BUFFER ZONES.
  2) INSTALL SEDIMENT CONTROL MEASURES.
  3) CLEARING.
  4) DETERMINE DEWATERING METHOD AND LOCATION PRIOR TO PIER COFFERDAM INSTALLATION, DEWATERING METHOD AND OFFERDAM TO BE DEVELOPED BY CONTRACTOR.
  5) CONSTRUCT BRIDGE PIERS. DEWATER EXCAVATIONS AS NECESSARY.
  6) PLACE AND COMPACT FILL FOR CANTILEVERED ABUTMENTS.
  7) BACKFILL AROUND ABUTMENTS.
  8) CONSTRUCT BRIDGE SUPERSTRUCTURE.
  9) PLACE SUBBASE MATERIAL FOR ROADWAY APPROACHES.
  10)PAVE ROADWAY AND SHOULDERS WITH BASE COURSE OF PAVEMENT.
  11)FINAL GRADE SIDE SLOPES.
  12)APPLY PERMANENT STABILIZATION MEASURES TO ALL REMAINING EXPOSED SOIL AREAS.

- **TH #22**
  1) ESTABLISH PERIMETER CONTROLS AND MARK BOUNDARIES FOR SENSITIVE RESOURCE AREAS, SUCH AS WETLANDS AND RIPARIAN BUFFER ZONES.
  2) INSTALL SEDIMENT CONTROL MEASURES.
  3) CLEARING.
  4) BEGIN EXCAVATION OF ROADWAY FOR NEW SUBBASE MATERIAL.
  5) INSTALL ONE CATCH BASIN AND TWO DRAINAGE PIPES UNDER ROADWAY. PHASE PIPE INSTALLATION TO MAINTAIN ONE LANE OF TRAFFIC. INLET PROTECTION SHALL BE PROVIDED FOR THE CATCH BASIN DURING CONSTRUCTION.
  6) PLACE SUBBASE MATERIAL FOR ROADWAY.
  7) CONSTRUCT STONE LINED DITCH THAT RUNS PARALLEL TO TH #22. USE CHECK DAMS TO CONTROL WATER DURING A STORM EVENT.
  8) GRADE DITCH CONVERGENCE ON THE EAST SIDE OF TH #22. SEE THE DITCH CONVERGENCE PLAN ON SHEET #16 OF THE PRELIMINARY PLANS FOR GRADING DETIALS.
  9) PAVE ROADWAY AND SHOULDERS WITH BASE COURSE OF PAVEMENT.
  10)FINAL GRADE SIDE SLOPES.
  11)APPLY PERMANENT STABILIZATION MEASURES TO ALL REMAINING EXPOSED SOIL AREAS.

- **RAIL TRAIL**
  1) ESTABLISH PERIMETER CONTROLS AND MARK BOUNDARIES FOR SENSITIVE RESOURCE AREAS, SUCH AS WETLANDS AND RIPARIAN BUFFER ZONES.
  2) INSTALL SEDIMENT CONTROL MEASURES.
  3) CLEARING.
  4) BEGIN EXCAVATION OPERATIONS FOR TRAIL AND FIELD DRIVE SUBBASE.
  5) CONSTRUCT GRASS TREATMENT SWALE.
  6) PLACE SUBBASE MATERIAL FOR TRAIL.
  7) WHERE THE CONVERGENCE DITCH MEETS WITH THE TRAIL, REMOVE EXISTING PIPE AND INSTALL NEW PIPE UNDER THE TRAIL AT STA. 59+07.0 AND THIS PIPE WILL DISCHARGES INTO THE LAMOILLE RIVER. CONSTRUCT STONE OUTLET PROTECTION.
  8) PAVE TRAIL APPROACHES AT ALL INTERSECTONS WITH TH#22 AND VT-15 AS INDICATED IN THE TRAIL TYPICAL.
  9) FINAL GRADE SIDE SLOPES.
  10)APPLY PERMANENT STABILIZATION MEASURES TO ALL REMAINING EXPOSED SOIL AREAS.

- **VT-15 AND INTERSECTION AT VT-15A**
  1) ESTABLISH PERIMETER CONTROLS AND MARK BOUNDARIES FOR SENSITIVE RESOURCE AREAS, SUCH AS WETLANDS AND RIPARIAN BUFFER ZONES.
  2) INSTALL SEDIMENT CONTROL MEASURES.
  3) CLEARING.
  4) PLACE PRECAST CONCRETE CATTLE PASS.
  5) PLACE SUBBASE MATERIAL FOR ROADWAY APPROACHES.
  6) PAVE ROADWAY AND SHOULDERS WITH BASE COURSE OF PAVEMENT.
  7) FINAL GRADE SIDE SLOPES.
  8) APPLY PERMANENT STABILIZATION MEASURES TO ALL REMAINING EXPOSED SOIL AREAS.

4. **STABILIZATION OF EXPOSED SOILS**

- SEED AND MULCH WILL BE USED FOR BOTH PERMANENT AND TEMPORARY STABILIZATION MEASURES. ROLLED EROSION CONTROL PRODUCT (RECP) WILL BE USED IN PLACE OF MULCH FOR SLOPES GREATER THAN 1V:3H. MULCH IS TO BE APPLIED AT A MINIMUM APPLICATION RATE SHOWN ON SHEET EROSION CONTROL DETAIL SHEET 3, UNLESS DIRECTED OTHERWISE BY THE ENGINEER.

- DISTURBED AREAS AND SOIL STOCKPILES THAT WILL NOT BE WORKED FOR MORE THAN 7 DAYS SHALL BE TEMPORARILY STABILIZED WITH MULCH/RECP WITHIN 48 HOURS.

- DISTURBED AREAS AND SOIL STOCKPILES THAT WILL NOT BE WORKED FOR MORE THAN 30 DAYS SHALL BE TEMPORARILY STABILIZED WITH SEED AND MULCH/RECP WITHIN 48 HOURS.

- EXPOSED AREAS THAT HAVE ACHIEVED FINAL GRADE SHALL BE PERMANENTLY STABILIZED WITHIN 48 HOURS.

- IN AREAS WHERE VEGETATIVE COVER WILL PROVIDE PERMANENT STABILIZATION, SEEDING TO BE COMPLETED BETWEEN APRIL 15 AND SEPTEMBER 15.

5. **DRAINAGE AREAS AND DISCAHRGE POINTS**
THE NEW BRIDGE IS BEING CONSTRUCTED ON NEW ALIGNMENT DOWNSTREAM OF THE EXISTING BRIDGE; TO INCLUDE THE REALINGMENT OF VT-15 AND THE INTERSECTION OF VT-15 / VT-15A.

THE PROJECT HAS THREE DISCREET DISCHARGE POINT TO THE RECEIVING WATER, THE LAMOILLE RIVER AND TWO NON-DISCREET DISCHARGE POINTS TO THE LAMOILLE RIVER. EACH DISCHARGE CORRESPONDS TO A DRAINAGE AREA IN WHICH THE PROJECT HAS BEEN DIVIDED.

1) **DRAINAGE AREA 001**
LOCATED ON VT-15A STARTING AT STA. 102+00 (CENTER OF VT-15A) TO STA. 107+40 (EDGE OF RIGHT SHOULDER). DRAINAGE FROM THIS SITE INCLUDES THE ROAD SIDE SLOPE AND A TREATMENT SWALE FOUND TO THE LEFT. HERE IS AN ADDITIONAL DRAINAGE FROM THIS AREA THAT IS ALSO PART OF THE SITE. THIS AREA IS STARTING FROM THE TRAIL STA. 52+00 (EDGE OF FEFT SHOULDER) TO STA. 55+40 (EDGE OF LEFT SHOULDER). THE TRAIL SURFACE SLOPES TO THE TREATMENT SWALE. BOTH FLOWS WILL BE CHANNELIZED IN THE TREATMENT SWALE. THE WATER WILL TRAVEL OFF THE PROJECT SITE INTO A SWALE WHICH PARELLES THE TRAIL AND CROSSES UNDER THE TRAIL TO A PIPE.ONCE THE WATER LEAVES THE PIPE IT WILL TRAVEL UTILIZING THE EXISTING GROUND TOPOGRAPHY, THERE IS NO CHANNELIZED FLOW WITH A DISCREET DISCHARGE POINT INTO THE LAMOILLE RIVER.

2) **DRAINAGE AREA 002**
LOCATED ON VT-15A FROM STA. 102+00 (EDGE OF RIGHT SHOULDER) TO STA. 108+00 (EGDGE OF RIGHT SHOULDER) INCLUDING THE STONE LINED DITCH THAT PARRELLELS VT-15A (RIGHT), DITCH BACK SLOPE TO PROJECT LIMITS.THIS COLLECTED WATER IS CHANNELED INTO A PIPE 1 AT STA.107+25.0 RT. THIS DRAINAGE AREA HAS ONE NON DISCREET DISCHARGE POINT TO THE LAMOILLE RIVER.

3) **DRAINAGE AREA 003**
LOCATED ON VT-15A STARTING AT STA. 113+42 (RIGHT FACE OF RAIL) TO STA. 118+27 (LEFT EDGE OF SHOULDER) THE ROAD SUPER ELEVATION TRANSITIONS IN THIS AREA. THE AREA OF DRAINAGE IS FROM THE ABOVE STATIONS TO THIER PROJECT LIMITS TO THE LEFT. UTILIZING THE EXISTING GROUND TOPOGRAPHY TO TREAT THE WATER, THERE IS NO CHANNELIZED FLOW WITH A DISCREET DISCHARGE POINT INTO THE LAMOILLE RIVER.
THIS DRAINAGE AREA ALSO INCLUDES A SECTION OF VT-15 STARTING FROM STA. 207+60 (RIGHT EDGE OF RIGHT SHOULDER) TO STA. 210+00 (RIGHT EDGE OF RIGHT SHOULDER) THIS AREA DRAINS FROM THE EDGE OF THE ROAD TO THE FIELD LOCATED BETWEEN VT-15 AND LAMOILLE THIS AREA WILL BE USING THE EXISTING GROUND TOPOGRAPHY TO TREAT THE WATER, THERE IS NO CHANNELIZED FLOW WITH A DISCREET DISCHARGE POINT INTO THE LAMOILLE RIVER.

4) **DRAINAGE AREA 004**
LOCATED ON VT-15A STARTING AT STA. 113+50 (RIGHT FACE OF RAIL) TO STA. 118+27 (LEFT EDGE OF SHOULDER). THE LIMITS OF THIS AREA ARE FROM THE ABOVE STATIONS TO THE PROJECT LIMITS TO THE RIGHT. THIS AREA WILL BE UTILIZING THE EXISTING GROUND TOPOGRAPHY TO TREAT THE WATER; THERE IS NO CHANNELIZED FLOW WITH A DISCREET DISCHARGE POINT INTO THE LAMOILLE RIVER.
THIS DRAINAGE AREA ALSO INCLUDES A SECTION OF VT-15 STARTING FROM STA. 211+00 (CENTERLINE OF ROAD) TO STA. 212+50 (CENTERLINE OF ROAD); THE AREA OF DRAINAGE IS FROM THE ABOVE STATIONS TO THE PROJECT LIMITS TO THE RIGHT. THIS AREA DRAINS FROM THE EDGE OF THE ROAD TO THE FIELD LOCATED BETWEEN VT-15 AND LAMOILLE RIVER THIS AREA WILL BE USING THE EXISTING GROUND TOPOGRAPHY TO TREAT THE WATER, THERE IS NO CHANNELIZED FLOW WITH A DISCREET DISCHARGE POINT INTO THE LAMOILLE RIVER.

5) **DRAINAGE AREA 005**
THIS SITE IS LOCATED BETWEEN STA. 203+00 (RIGHT FACE OF RAIL) TO STA. 208+10.00 (RIGHT EDGE OF SHOULDER), THIS AREA INCLUDES THE ENTIRE TREATMENT SWALE TO THE LEFT. WATER LEAVING THIS DRAINAGE AREA WILL PASS UNDER VT-15 THROUGH A OFF PROJECT EXISTIG PIPE; THE WATER WILL EXIT THE PIPE UP SLOPE OF THE LAMOILLE RIVER WITH A SHORT TRAVEL DISTANCE TO A NON DISCREET DISCHARGE POINT INTO THE LAMOILLE RIVER.

DRAINAGE AREA SUMMARY

DRAINAGE AREA	TOTAL DISTURB. (ACRES)	LIMIT OF CONCURRENT DISTURBANCE	RECEIVING WATER
001	0.73	0.50	LAMOILLE RIVER
002	0.62	0.30	LAMOILLE RIVER
003	0.99	0.70	LAMOILLE RIVER
004	0.67	0.30	LAMOILLE RIVER
005	0.57	0.20	LAMOILLE RIVER

6. **WASTE, BORROW, AND STAGING AREAS**

- OFF-SITE WASTE AND BORROW AREAS HAVE NOT BEEN IDENTIFIED FOR THIS PROJECT. LARGE QUANTITIES OF WASTE AND BORROW ARE NOT ANTICIPATED, HOWEVER, AS THIS PROJECT HAS CUT AND FILL OPERATIONS THAT ARE ROUGHLY BALANCED IT WILL BE THE CONTRACTOR'S RESPONSIBILITY TO IDENTIFY AND PERMIT, AS NECESSARY, ANY OFF-SITE WASTE AND BORROW AREAS THAT ARE NEEDED. ALL EROSION PREVENTION AND SEDIMENT CONTROL MEASURES NECESSARY FOR WASTE, BORROW, AND STAGING AREAS OUTSIDE THE PROJECT LIMITS SHALL BE PAID FOR PER 105.29 OF THE STANDARD SPECIFICATIONS FOR CONSTRUCTION.

- LOCATE ADDITIONAL AREAS FOR DISPOSAL OF STUMPS, EXCESS SOILS AND COLLECTED SEDIMENT, IF NECESSARY. DISPOSE OF THESE MATERIALS IN A MANNER THAT WILL NOT RESULT IN SEDIMENTS ENTERING WATERS OF THE STATE.

- DISPOSAL SITES REQUIRE RELATIVELY LEVEL TERRAIN WITH AN ISOLATION DISTANCE OF AT LEAST 100 FT FROM ANY SURFACE WATERS, INCLUDING WETLANDS.

- VEHICLE AND EQUIPMENT STORAGE AREAS OR AREAS ADJACENT TO CONSTRUCTION TRAILERS OR OTHER HIGH TRAFFIC AREAS SHALL BE COVERED WITH GEOTEXTILE FABRIC AND 300MM OF GRAVEL. FOLLOWING COMPLETION OF CONSTRUCTION, ALL NON-NATIVE MATERIALS SHALL BE REMOVED FROM THE STAGING AREA. COMPACTED, RUTTED, OR OTHERWISE DISTURBED SOILS SHALL BE TILLED, RAKED, SEEDED AND MULCHED.

- ERODIBLE MATERIALS STOCKPILED WITHIN THE MATERIAL STORAGE AREAS SHALL BE ISOLATED WITH SILT FENCE OR OTHER ACCEPTABLE SEDIMENT BARRIER. SOIL STOCKPILED ON THE SITE SHALL BE SEEDED AND MULCHED.

EROSION CONTROL NARRATIVE

CONTRACTOR RESPONSIBILITIES, LIMITATIONS & PROHIBITIONS

1. GENERAL NOTES

- IT SHALL BE THE RESPONSIBILITY OF THE CONTRACTOR TO AMEND/UPDATE ALL PLANS AND EXISTING PERMITS WHEN ADDING DETAILED CONSTRUCTION PHASING OR ANYTHING ELSE THAT MAY DEVIATE FROM THE APPROVED PLANS AS DIRECTED BY THE RESIDENT ENGINEER.
- THE CONTRACTOR SHALL NOTE THAT NO MORE THAN 2 ACRES OF EARTH SHALL BE DISTURBED AT ANY ONE TIME.
- OTHER THAN THOSE SHOWN ON THE PLANS ALL LAND DISTURBANCES WITHIN 50 FT OF ALL WATER BODIES, MEASURED FROM THE TOP OF BANK, AND WETLANDS, ARE PROHIBITED WITHOUT FURTHER REGULATORY REVIEW.
- CONTRACTOR TO MAINTAIN ALL EXISTING STREAMS AND RIPARIAN BUFFER ZONES IN THEIR NATURAL CONDITION.
- OFF-SITE DISCHARGES OF ANY MATERIAL OTHER THAN STORMWATER, SUCH AS VEHICLE AND EQUIPMENT MAINTENANCE SPILLS, FUELS, WASH WATER, CONSTRUCTION DEBRIS, OIL, WET CONCRETE (INCLUDING WASHOUT WATER FROM CONCRETE BATCH TRUCKS OR EQUIPMENT USED TO MIX CONCRETE), AND OTHER SUBSTANCES, ARE PROHIBITED.
- THE FAILURE TO PROMPTLY ABATE THE DISCHARGE OF SEDIMENT OR ANY OTHER WASTE WHICH CAUSES A VISIBLE DISCOLORATION OF SURFACE WATERS (INCLUDING WETLANDS), OR IS FOUND TO BE VIOLATING WATER QUALITY STANDARDS BASED ON MONITORING, IS PROHIBITED. ANY CORRECTIVE ACTION UNDERTAKEN TO REMOVE SEDIMENT FROM A WETLAND IS ALSO PROHIBITED.
- WEATHER CONDITIONS WILL BE MONITORED DURING THE CONSTRUCTION SEASON. IF AN EXTENDED RAIN PERIOD OR HEAVY RAIN IS PREDICTED, EXPOSED SOIL AREAS WILL BE MULCHED PRIOR TO AND DAILY DURING THE RAIN EVENT. IF DETERMINED NECESSARY BY THE RESIDENT ENGINEER, WORK MAY BE SUSPENDED OR LIMITED DURING THE STORM.

2. EPSC PLAN

THE CONTRACTOR SHALL SUBMIT AN EPSC PLAN IN ACCORDANCE WITH SPECIAL PROVISION EROSION PREVENTION AND SEDIMENT CONTROL PLAN AND PROJECT PERMITS. THE PLAN AT A MINIMUM SHALL TAKE INTO CONSIDERATION THE FOLLOWING:

- **DRAINAGE AREA 1**
  - THE DISTURBANCE AT ANY ONE TIME IN THIS AREA SHALL BE LIMITED TO 0.70 ACRE.
  - ACCESS TO THE AREA, INCLUDING TEMPORARY AND PERMANENT STABILIZATION OF THE PROPOSED ACCESS DURING AND THEN FOLLOWING CONSTRUCTION OF THE PROJECT
  - STORMWATER RUNOFF TO BE CONTROLLED PRIOR TO, DURING, AND THEN FOLLOWING THE FULL COMPLETION OF GRASS TREATMENT SWALE. THE GRASSED LINED SWALE, WHICH SHALL HAVE ADEQUATE VEGETATIVE GROWTH PRIOR TO DISCHARGING RUNOFF TO IT.
- **DRAINAGE AREA 2**
  - THE DISTURBANCE AT ANY ONE TIME IN THIS AREA SHALL BE LIMITED TO 0.30 ACRE.
  - STORMWATER RUNOFF TO BE CONTROLLED PRIOR TO, DURING, AND THEN FOLLOWING THE FULL COMPLETION OF THE STONE LINED DITCH, CATCH BASIN AND PIPE UNDER TH #22 AT STATION 10+30.
  - LOCATION OF CHECK DAMS IN ACCORDANCE WITH THE CHECK DAM DETAIL.
  - INSTALLATION OF INLET PROTECTION FOR THE CATCH BASIN.
- **DRAINAGE AREA 3**
  - THE DISTURBANCE AT ANY ONE TIME IN THIS AREA SHALL BE LIMITED TO 0.70 ACRE.
  - STORMWATER RUNOFF TO BE CONTROLLED PRIOR TO, DURING THEN FOLLOWING THE FULL COMPLETION OF THE PROJECT.
- **DRAINAGE AREA 4**
  - THE DISTURBANCE AT ANY ONE TIME IN THIS AREA SHALL BE LIMITED TO 0.30 ACRE.
  - STORMWATER RUNOFF TO BE CONTROLLED PRIOR TO, DURING, AND THEN FOLLOWING THE FULL COMPLETION OF THE PROJECT.
- **DRAINAGE AREA 5**
  - THE DISTURBANCE AT ANY ONE TIME IN THIS AREA SHALL BE LIMITED TO 0.20 ACRE.
  - STORMWATER RUNOFF TO BE CONTROLLED PRIOR TO, DURING, AND THEN FOLLOWING THE FULL COMPLETION OF THEN FOLLOWING THE FULL COMPLETION OF GRASS TREATMENT SWALE. THE GRASSED LINED SWALE, WHICH SHALL HAVE ADEQUATE VEGETATIVE GROWTH PRIOR TO DISCHARGING RUNOFF TO IT.

THE EPSC PLAN SHALL ALSO INCLUDE INFORMATION REGARDING:
- THE CONSTRUCTION OF STONE PADS, INCLUDING STREAM DIVERSION PLANS
- METHOD FOR TREATMENT OF DISCHARGE FROM DEWATERING.
- CONSTRUCTION OF HAUL ROADS.
- STABILIZATION OF OPERATIONAL STORMWATER TREATMENT PRACTICES PRIOR TO DIRECTING RUNOFF TO THEM.

3. INSPECTION & MONITORING NOTES

- CONTRACTOR TO CONDUCT INSPECTIONS AND MONITORING IN ACCORDANCE WITH THE SPECIAL PROVISIONS AND PERMIT SPECIFIC REQUIREMENTS.
- THE CONTRACTOR SHALL KEEP ONE (1) TURBIDITY MONITORS ONSITE AND HAVE PERSONNEL ON HAND THAT ARE TRAINED IN THEIR OPERATION.

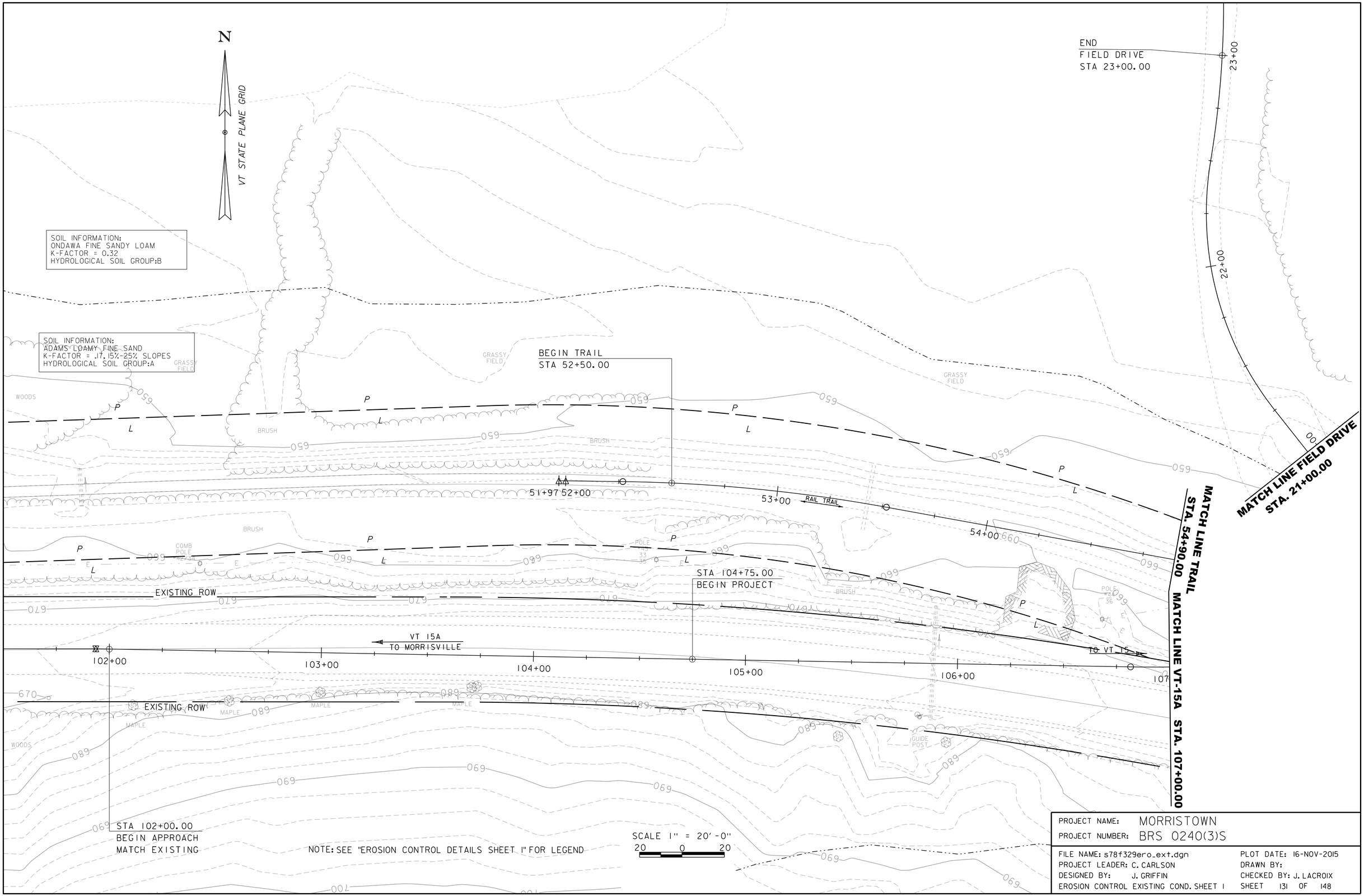

PROJECT NAME: MORRISTOWN
PROJECT NUMBER: BRS 0240(3)S

FILE NAME: s78f329ero_ext.dgn
PROJECT LEADER: C. CARLSON
DESIGNED BY: J. GRIFFIN
EROSION CONTROL EXISTING COND. SHEET 1

PLOT DATE: 16-NOV-2015
DRAWN BY:
CHECKED BY: J. LACROIX
SHEET 131 OF 148

MATCH LINE TRAIL STA. 54+90.00

MATCH LINE VT-15A STA. 107+00.00

MATCH LINE FIELD DRIVE STA. 21+00.00

MATCH LINE VT-15A STA 112+50.00

SOIL INFORMATION:
ONDAWA FINE SANDY LOAM
K-FACTOR = 0.24
HYDROLOGICAL SOIL GROUP:B

SOIL INFORMATION:
WATER

BEGIN BRIDGE
STA 108+68.67
F.G. = 663.90

℄ PIER #1
STA 109+00.00
F.G. = 662.92

END BRIDGE
STA 110+91.33
F.G. = 659.73

℄ PIER #2
STA 110+60.00
F.G. = 659.92

VT 15A
TO MORRISVILLE

TO VT 15

EXISTING ROW

EXISTING ROW

WETLAND BUFFER ZONE

WETLAND BUFFER ZONE

RIPARIAN BUFFER ZONE

LAMOLLIE RIVER

SOIL INFORMATION: TUNBRIDGE-LYMAN
FINE SANDY LOAMS, ROCKY
K-FACTOR = .24/.28, 15%-25% SLOPES
HYDROLOGICAL SOIL GROUP:C

SOIL INFORMATION:
PODUNK FINE SANDY LOAM
K-FACTOR = 0.24
HYDROLOGICAL SOIL GROUP:B

SOIL INFORMATION: HAMLIN
SILT LOAM
K-FACTOR = 0.49
HYDROLOGICAL SOIL GROUP:B

END
TH 22
STA 12+75.00

SOIL INFORMATION:
ADAMS LOAMY FINE SAND K-FACTOR = .17,
15%-25% SLOPES, HYDROLOGICAL SOIL GROUP:A

END TRAIL
STA 59+50.00

VT STATE PLANE GRID

N

SCALE 1" = 20'-0"
20 0 20

NOTE: SEE "EROSION CONTROL DETAILS SHEET 1" FOR LEGEND

PROJECT NAME: MORRISTOWN	
PROJECT NUMBER: BRS 0240(3)S	
FILE NAME: s78f329ero_ext.dgn	PLOT DATE: 16-NOV-2015
PROJECT LEADER: C. CARLSON	DRAWN BY:
DESIGNED BY: J. GRIFFIN	CHECKED BY: J. LACROIX
EROSION CONTROL EXISTING COND. SHEET 2	SHEET 132 OF 148

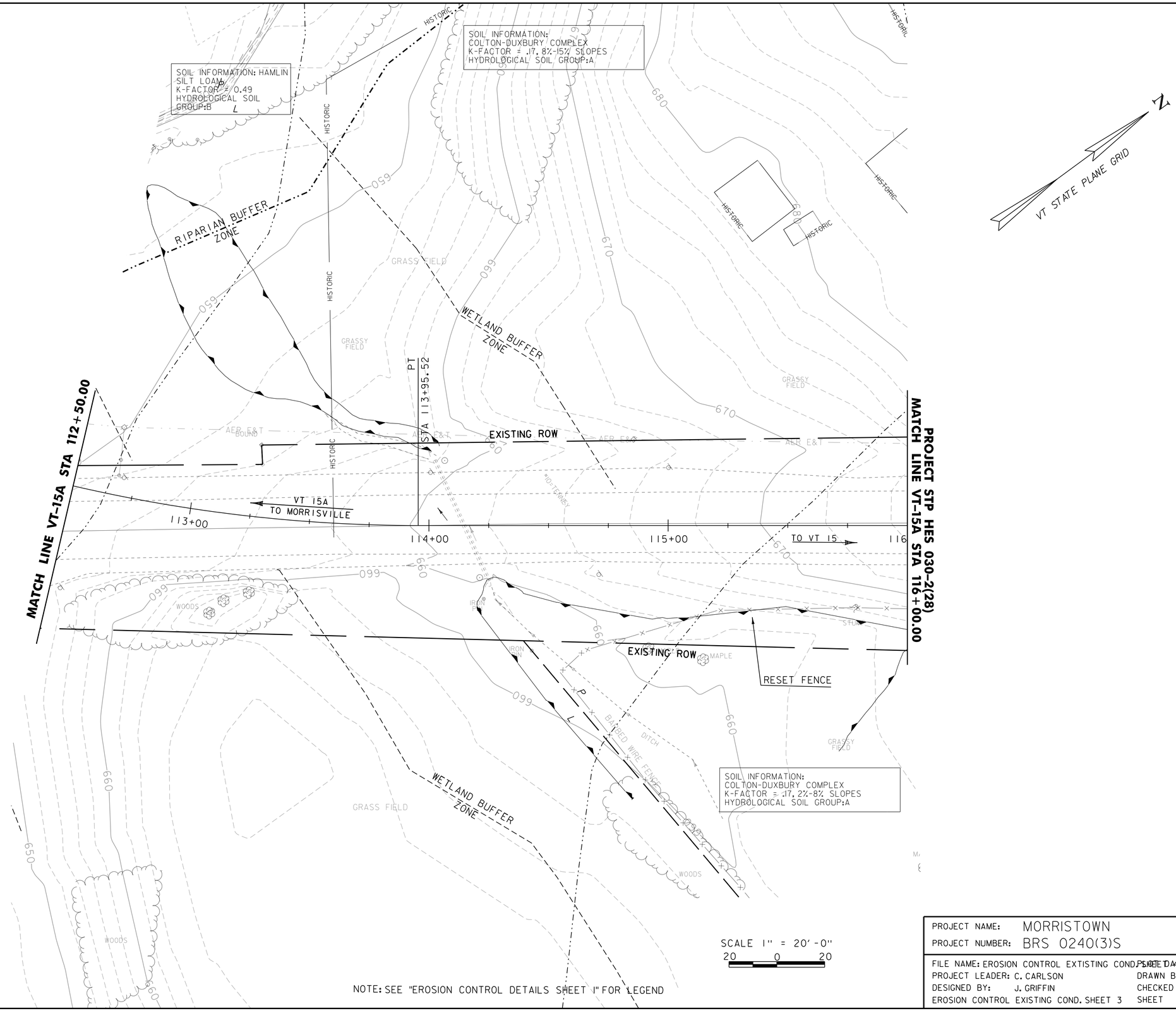

NOTE: SEE "EROSION CONTROL DETAILS SHEET 1" FOR LEGEND

PROJECT NAME: MORRISTOWN	
PROJECT NUMBER: BRS 0240(3)S	
FILE NAME: EROSION CONTROL EXTISTING COND. SHEET 4	PLOT DATE: 16-NOV-2015
PROJECT LEADER: C. CARLSON	DRAWN BY:
DESIGNED BY: J. GRIFFIN	CHECKED BY: L. LACROIX
EROSION CONTROL EXISTING COND. SHEET 3	SHEET 133 OF 148

SOIL INFORMATION:
ADAMS LOAMY FINE SAND
K-FACTOR = .17, 25%-50% SLOPES
HYDROLOGICAL SOIL GROUP:A

EXISTING ROW

N

VT STATE PLANE GRID

BEGIN APPROACH
STA. 203+00.00

BEGIN PROJECT
STA. 204+00.00

WETLAND BUFFER ZONE

AER E&T

203+00

VT 15
TO HYDE PARK

204+00

205+00

206+00

207+00

208+00

VT 15
TO WOLCOTT

209

MATCH LINE VT-15 STA. 209+00.00

SOIL INFORMATION:
COLTON-DUXBURY COMPLEX
K-FACTOR = .17, 2%-8% SLOPES
HYDROLOGICAL SOIL GROUP:A

GARAGE

HOUSE

TREES

MOWN LAWN

700

EXISTING ROW

670
680
690
660
650

HISTORIC

SAW MILL

BARN

LAMOLLIE RIVER

SOIL INFORMATION:
COLTON-DUXBURY COMPLEX
K-FACTOR = .17, 8%-15% SLOPES
HYDROLOGICAL SOIL GROUP:A

SOIL INFORMATION:
WATER

SCALE 1" = 20'-0"
20 0 20

NOTE: SEE "EROSION CONTROL DETAILS SHEET 1" FOR LEGEND

PROJECT NAME: MORRISTOWN	
PROJECT NUMBER: STP HES 030-2(28)	
FILE NAME: s78f329ero_ext.dgn	PLOT DATE: 16-NOV-2015
PROJECT LEADER: C. CARLSON	DRAWN BY:
DESIGNED BY: J. GRIFFIN	CHECKED BY: L. LACROIX
EROSION CONTROL EXISTING COND. SHEET 4	SHEET 134 OF 148

MATCH LINE VT-15 STA. 209+00.00

MATCH LINE VT-15A STA 116+00.00
END PROJECT BRS 020(3)S

N
VT STATE PLANE GRID

INTERSECTION
VT-15A STA. 118+33.00
VT-15 STA. 210+75.00
AT 15° RIGHT

END PROJECT
STA. 213+00.00

END APPROACH
STA. 214+00.00
EXISTING ROW

VT 15
TO HYDE PARK

VT 15
TO WOLCOTT

VT 15A
TO MORRISVILLE

EXISTING R.O.W.

EXISTING ROW

WETLAND BUFFER ZONE

BARN
GARAGE
HOUSE
MOWN LAWN
WOOD FENCE
BARBED WIRE FENCE
SHED
BDLG
GRASS FIELD
HISTORIC
AER E&T
MILESTONE
BOUND
P L

SOIL INFORMATION:
COLTON-DUXBURY COMPLEX
K-FACTOR = .17, 2%-8% SLOPES
HYDROLOGICAL SOIL GROUP:A

SCALE 1" = 20'-0"
20 0 20

NOTE: SEE "EROSION CONTROL DETAILS SHEET 1" FOR LEGEND

PROJECT NAME: MORRISTOWN	
PROJECT NUMBER: STP HES 030-2(28)	
FILE NAME: s78f329ero_ext.dgn	PLOT DATE: 16-NOV-2015
PROJECT LEADER: C. CARLSON	DRAWN BY:
DESIGNED BY: J. GRIFFIN	CHECKED BY: L. LACROIX
EROSION CONTROL EXISTING COND. SHEET 5	SHEET 135 OF 148

N

VT STATE PLANE GRID

SOIL INFORMATION:
ONDAWA FINE SANDY LOAM
K-FACTOR = 0.32
HYDROLOGICAL SOIL GROUP:B

SOIL INFORMATION:
ADAMS LOAMY FINE SAND
K-FACTOR = .17, 15%-25% SLOPES
HYDROLOGICAL SOIL GROUP:A

BEGIN TRAIL
STA 52+50.00

END
FIELD DRIVE
STA 23+00.00

EXISTING ROW

51+97 52+00

53+00 RAIL TRAIL

54+00

STA 104+78.00
BEGIN PROJECT

VT 15A
TO MORRISVILLE

TO VT 15

STONE FILL, TYPE II

FIELD DRIVE

MATCH LINE TRAIL
STA. 54+90.00

MATCH LINE VT-15A STA. 107+00.00

MATCH LINE FIELD DRIVE
STA. 21+00.00

STA 102+00.00
BEGIN APPROACH
MATCH EXISTING

NOTE: SEE "EROSION CONTROL DETAILS SHEET 1" FOR LEGEND

SCALE 1" = 20'-0"
20 0 20

PROJECT NAME: MORRISTOWN	
PROJECT NUMBER: BRS 0240(3)S	
FILE NAME: s78f329alignbdr.dgn	PLOT DATE: 16-NOV-2015
PROJECT LEADER: C. CARLSON	DRAWN BY:
DESIGNED BY: J. GRIFFIN	CHECKED BY: J. LACROIX
EROSION CONTROL CONST. COND. SHEET 1	SHEET 136 OF 148

MATCH LINE TRAIL
STA. 54+90.00

MATCH LINE FIELD DRIVE
STA. 21+00.00

MATCH LINE VT-15A STA. 107+00.00

MATCH LINE VT-15A STA 112+50.00

POTENTIAL SEDIMENT DEWATER LOCATION, CONTRACTOR TO PROVIDE DETAILS AND METHODOLOGY WITH COFFER DAM DETAILS.

BEGIN BRIDGE
STA 108+68.67
F.G. = 663.90

℄ PIER #1
STA 109+00.00
F.G. = 662.92

POTENTIAL SEDIMENT DEWATER LOCATION, CONTRACTOR TO PROVIDE DETAILS AND METHODOLOGY WITH COFFER DAM DETAILS.

END BRIDGE
STA 110+91.33
F.G. = 659.73

℄ PIER #2
STA 110+60.00
F.G. = 659.92

VT 15A TO MORRISVILLE

TO VT 15

WETLAND BUFFER ZONE

EXISTING ROW

EXISTING ROW

RIPARIAN BUFFER ZONE

LAMOLLIE RIVER

GRASSY FIELD

WOODS

END
TH 22
STA 12+75.00

END TRAIL
STA 59+50.00

SCALE 1" = 20'-0"
20 0 20

N

VT STATE PLANE GRID

NOTE: SEE "EROSION CONTROL DETAILS SHEET 1" FOR LEGEND

PROJECT NAME: MORRISTOWN	
PROJECT NUMBER: BRS 0240(3)S	
FILE NAME: s78f329alignbdr.dgn	PLOT DATE: 16-NOV-2015
PROJECT LEADER: C. CARLSON	DRAWN BY:
DESIGNED BY: J. GRIFFIN	CHECKED BY: J. LACROIX
EROSION CONTROL CONST. COND. SHEET 2	SHEET 137 OF 148

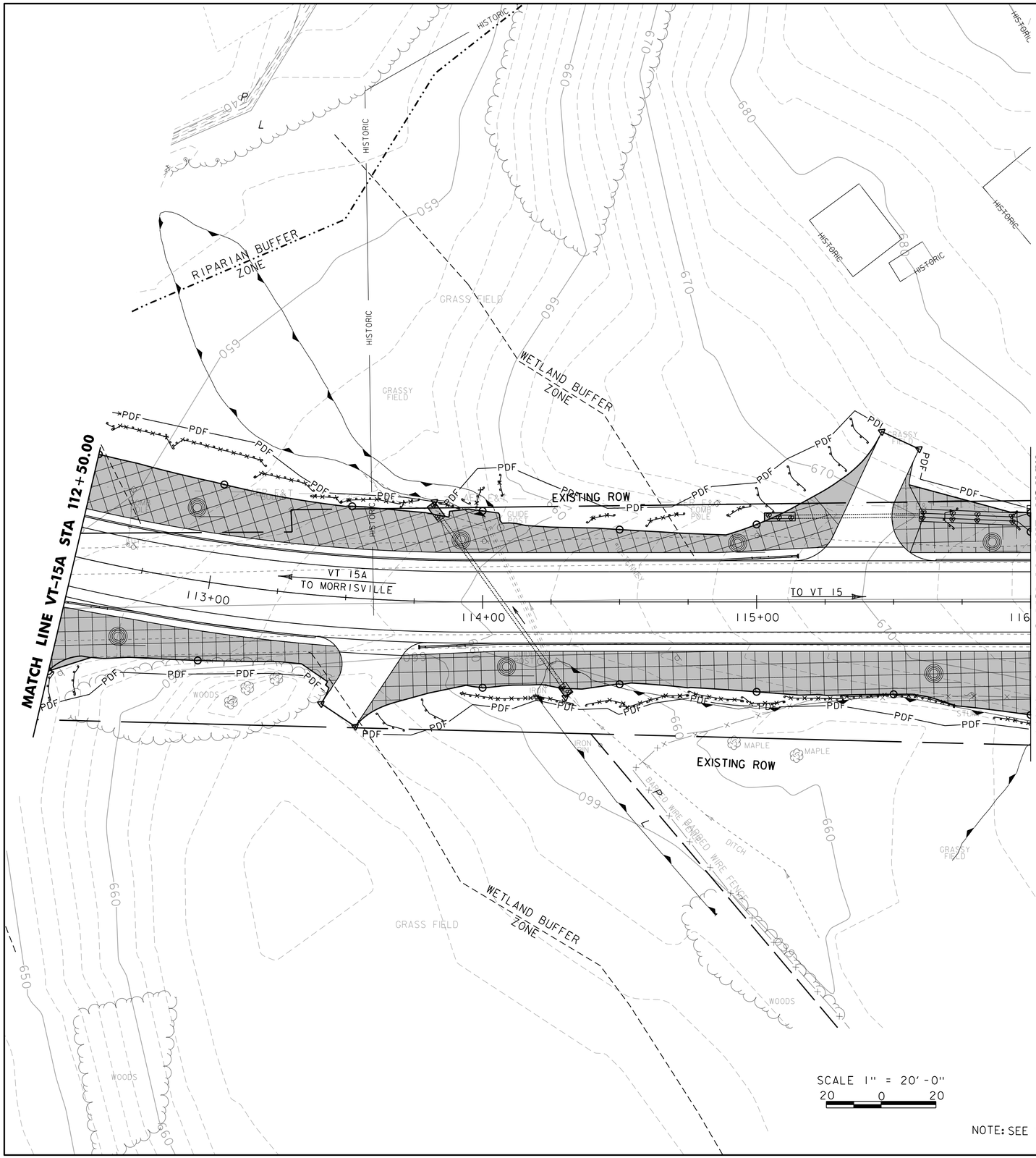

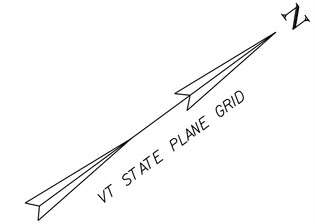

SCALE 1" = 20'-0"
20 0 20

NOTE: SEE "EROSION CONTROL DETAILS SHEET 1" FOR LEGEND

PROJECT NAME: MORRISTOWN	
PROJECT NUMBER: BRS 0240(3)S	
FILE NAME: s78f329alignbdr.dgn	PLOT DATE: 16-NOV-2015
PROJECT LEADER: C. CARLSON	DRAWN BY:
DESIGNED BY: J. GRIFFIN	CHECKED BY: J. LACROIX
EROSION CONTROL CONST. COND. SHEET 3	SHEET 138 OF 148

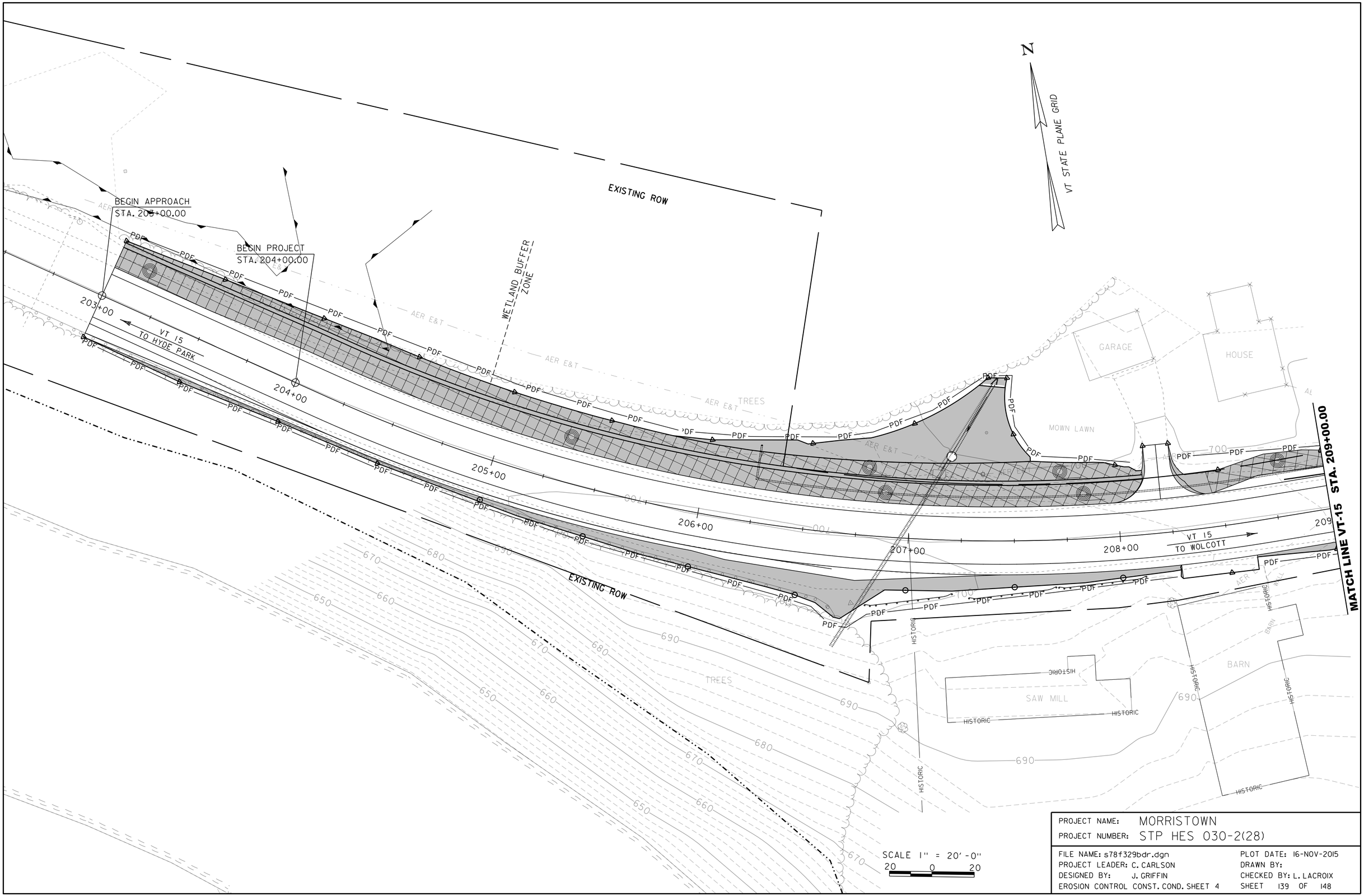

PROJECT NAME: MORRISTOWN
PROJECT NUMBER: STP HES 030-2(28)

FILE NAME: s78f329bdr.dgn	PLOT DATE: 16-NOV-2015
PROJECT LEADER: C. CARLSON	DRAWN BY:
DESIGNED BY: J. GRIFFIN	CHECKED BY: L. LACROIX
EROSION CONTROL CONST. COND. SHEET 4	SHEET 139 OF 148

MATCH LINE VT-15 STA. 209+00.00

MATCH LINE VT-15A STA 116+00.00
END PROJECT BRS 020(3)S

INTERSECTION
VT-15A STA. 118+33.00
VT-15 STA. 210+75.00
AT 15° RIGHT

END PROJECT
STA. 213+00.00

END APPROACH
STA. 214+00.00

VT 15
TO HYDE PARK

VT 15
TO WOLCOTT

EXISTING R.O.W.

EXISTING ROW

WETLAND BUFFER ZONE

BARN

GARAGE

HOUSE

MOWN LAWN

GRASS FIELD

WOOD FENCE

BARBED WIRE FENCE

SHED

BDG

N

VT STATE PLANE GRID

SCALE 1" = 20'-0"
20 0 20

PROJECT NAME: MORRISTOWN	
PROJECT NUMBER: STP HES 030-2(28)	
FILE NAME: s78f329bdr.dgn	PLOT DATE: 16-NOV-2015
PROJECT LEADER: C. CARLSON	DRAWN BY:
DESIGNED BY: J. GRIFFIN	CHECKED BY: L. LACROIX
EROSION CONTROL CONST. COND. SHEET 5	SHEET 140 OF 148

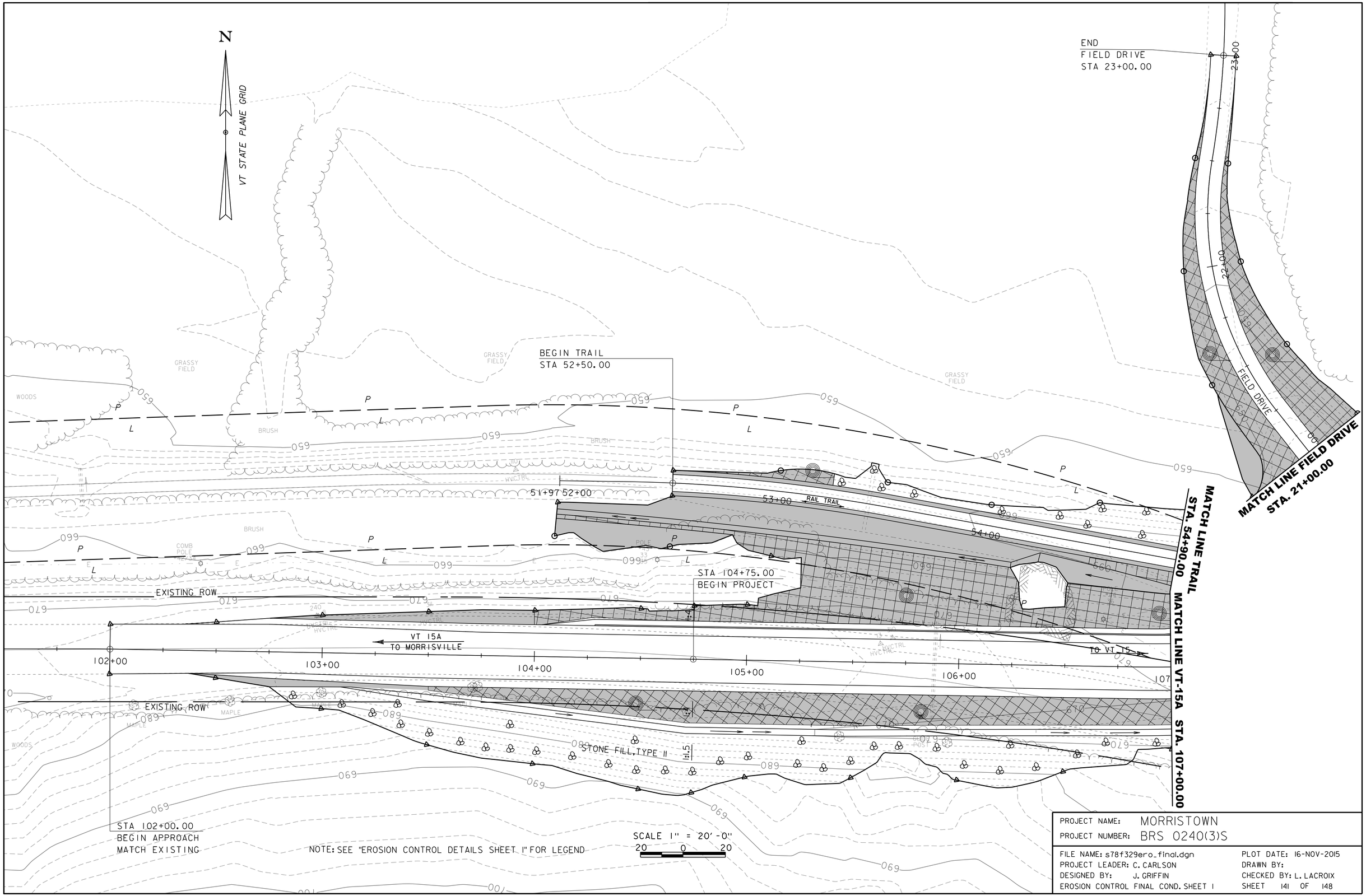

PROJECT NAME: MORRISTOWN	
PROJECT NUMBER: BRS 0240(3)S	
FILE NAME: s78f329ero_final.dgn	PLOT DATE: 16-NOV-2015
PROJECT LEADER: C. CARLSON	DRAWN BY:
DESIGNED BY: J. GRIFFIN	CHECKED BY: L. LACROIX
EROSION CONTROL FINAL COND. SHEET 1	SHEET 141 OF 148

MATCH LINE TRAIL
STA. 54+90.00

MATCH LINE FIELD DRIVE
STA. 21+00.00

MATCH LINE VT-15A STA. 107+00.00

MATCH LINE VT-15A STA 112+50.00

BEGIN BRIDGE
STA 108+68.67
F.G. = 663.90

℄ PIER #1
STA 109+00.00
F.G. = 662.92

END BRIDGE
STA 110+91.33
F.G. = 659.73

℄ PIER #2
STA 110+60.00
F.G. = 659.92

VT 15A
TO MORRISVILLE

TO VT 15

EXISTING ROW

EXISTING ROW

WETLAND BUFFER ZONE

WETLAND BUFFER ZONE

RIPARIAN BUFFER ZONE

LAMOLLIE RIVER

VT STATE PLANE GRID

N

SCALE 1" = 20'-0"
20 0 20

END
TH-22
STA 12+75.00

END TRAIL
STA 59+50.00

PROJECT NAME: MORRISTOWN	
PROJECT NUMBER: BRS 0240(3)S	
FILE NAME: s78f329ero_final.dgn	PLOT DATE: 16-NOV-2015
PROJECT LEADER: C. CARLSON	DRAWN BY:
DESIGNED BY: J. GRIFFIN	CHECKED BY: J. LACROIX
EROSION CONTROL FINAL COND. SHEET 2	SHEET 142 OF 148

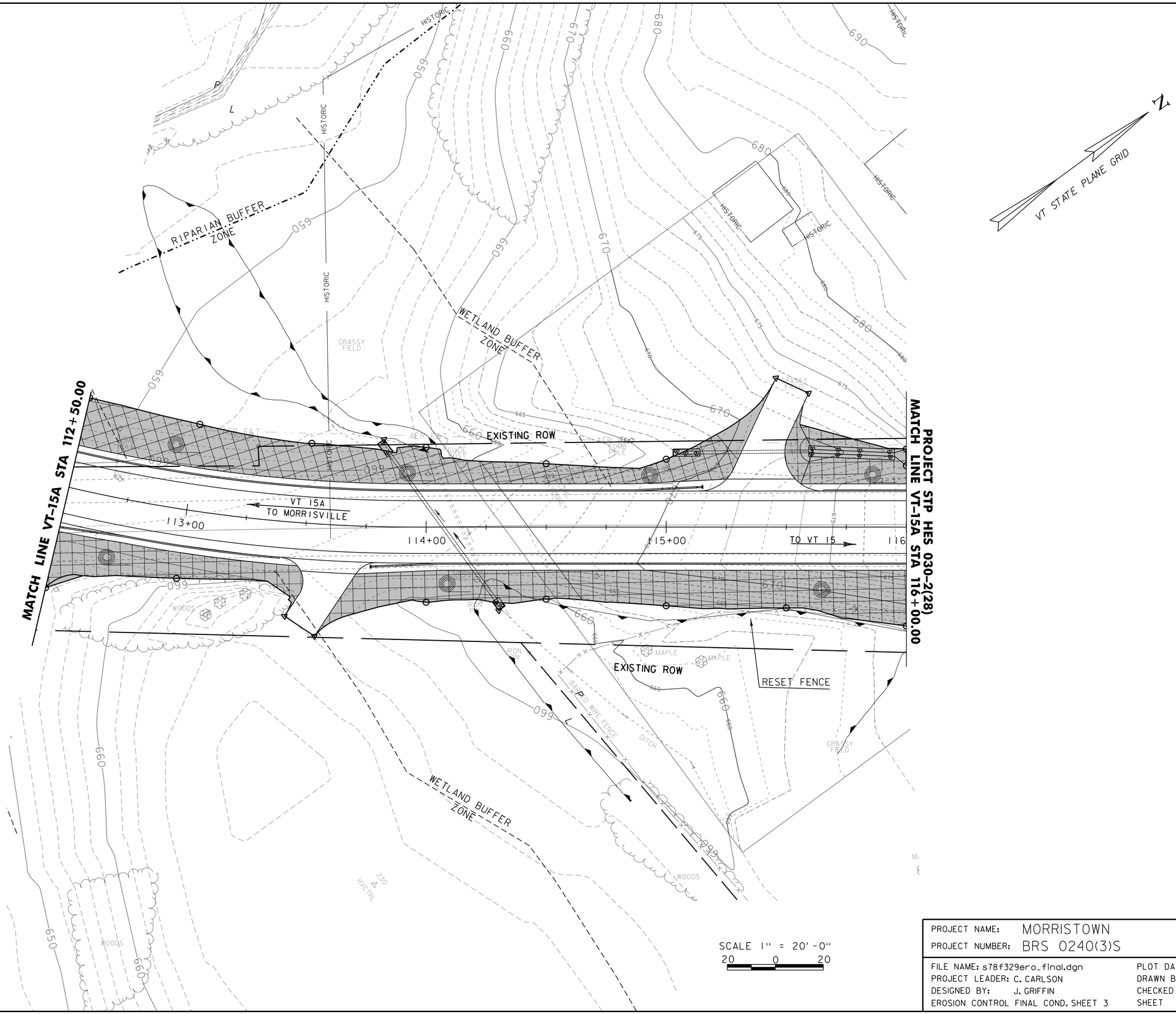

PROJECT NAME: MORRISTOWN	
PROJECT NUMBER: BRS 0240(3)S	
FILE NAME: s78f329ero_final.dgn	PLOT DATE: 16-NOV-2015
PROJECT LEADER: C. CARLSON	DRAWN BY:
DESIGNED BY: J. GRIFFIN	CHECKED BY: L. LACROIX
EROSION CONTROL FINAL COND. SHEET 3	SHEET 143 OF 148

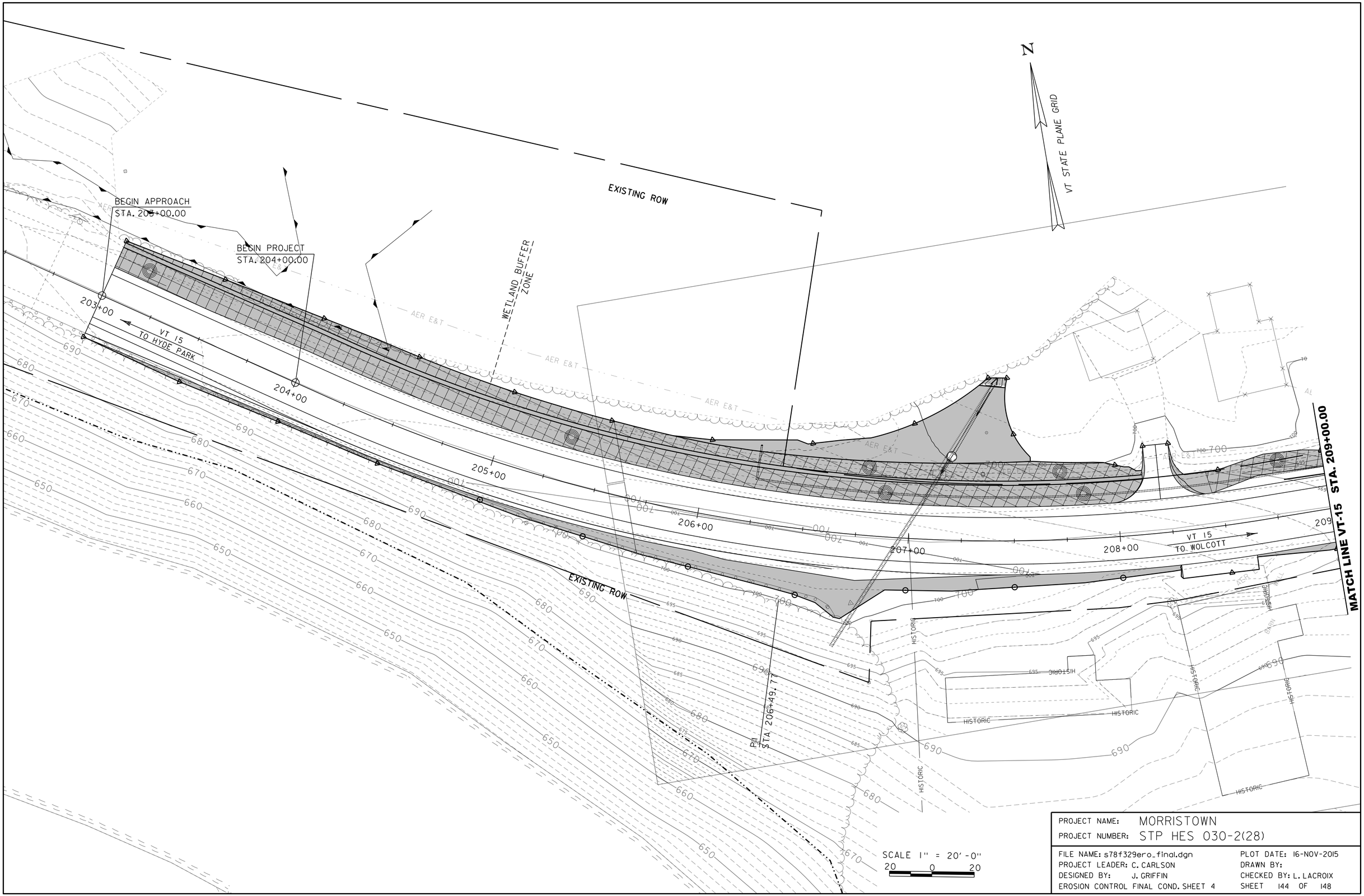

PROJECT NAME: MORRISTOWN	
PROJECT NUMBER: STP HES 030-2(28)	
FILE NAME: s78f329ero_final.dgn	PLOT DATE: 16-NOV-2015
PROJECT LEADER: C. CARLSON	DRAWN BY:
DESIGNED BY: J. GRIFFIN	CHECKED BY: L. LACROIX
EROSION CONTROL FINAL COND. SHEET 4	SHEET 144 OF 148

MATCH LINE VT-15 STA. 209+00.00

MATCH LINE VT-15A STA 116+00.00
END PROJECT BRS 020(3)S

N
VT STATE PLANE GRID

INTERSECTION
VT-15A STA. 118+33.00
VT-15 STA. 210+75.00
AT 15° RIGHT

END PROJECT
STA. 213+00.00

PI
STA 213+17.91

END APPROACH
STA. 214+00.00

EXISTING ROW

VT 15
TO HYDE PARK

VT 15
TO WOLCOTT

VT 15A
TO MORRISVILLE

PI
STA 117+63.85

EXISTING R.O.W.

WETLAND BUFFER ZONE

SCALE 1" = 20'-0"
20 0 20

PROJECT NAME: MORRISTOWN	
PROJECT NUMBER: STP HES 030-2(28)	
FILE NAME: s78f329ero_final.dgn	PLOT DATE: 16-NOV-2015
PROJECT LEADER: C. CARLSON	DRAWN BY:
DESIGNED BY: J. GRIFFIN	CHECKED BY: L. LACROIX
EROSION CONTROL FINAL COND. SHEET 5	SHEET 145 OF 148

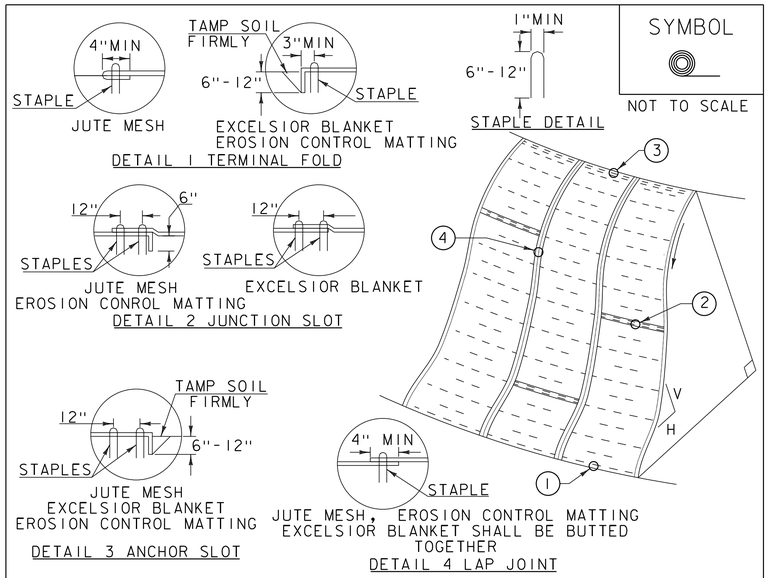

SYMBOL

NOT TO SCALE

CONSTRUCTION SPECIFICATIONS

1. APPLY TO SLOPES GREATER THAN 3H:1V OR WHERE NECESSARY TO AID IN ESTABLISHING VEGETATION.
2. APPLY FERTILIZER, LIME SEED PRIOR TO PLACING MATTING.
3. STAPLES ARE TO BE PLACED ALTERNATELY, IN COLUMNS APPROXIMATELY 2' APART AND IN ROWS APPROXIMATELY 3' APART. APPROXIMATELY 175 STAPLES ARE REQUIRED PER 4'X225' ROLL OF MATERIAL AND 125 STAPLES ARE REQUIRED PER 4'X150' ROLL OF MATERIAL.
4. DISTURBED AREAS SHALL BE SMOOTHLY GRADED. EROSION CONTROL MATERIAL SHALL BE PLACED LOOSELY OVER GROUND SURFACE. DO NOT STRETCH.
5. ALL TERMINAL ENDS AND TRANSVERSE LAPS SHALL BE STAPLED AT APPROXIMATELY 12" INTERVALS.

ADAPTED FROM DETAILS PROVIDED BY: NEW YORK STATE DEC
ORIGINALLY DEVELOPED BY USDA-NRCS
VERMONT DEPARTMENT OF ENVIRONMENTAL CONSERVATION

ROLLED EROSION CONTROL PRODUCT (RECP) SIDE SLOPE

NOTES:
REFER TO "THE VERMONT STANDARDS & SPECIFICATIONS FOR EROSION PREVENTION & SEDIMENT CONTROL -2006- " FROM THE VT AGENCY OF NATURAL RESOURCES FOR ADDITIONAL GUIDANCE.
THIS WORK SHALL BE PERFORMED IN ACCORDANCE WITH SECTION 653 AND AS SHOWN IN THE PLANS FOR TEMPORARY EROSION MATTING (PAY ITEM 653.20) OR PERMANENT EROSION MATTING (PAY ITEM 653.21).

REVISIONS	
APRIL 16, 2007	JMF
JANUARY 13, 2009	WHF

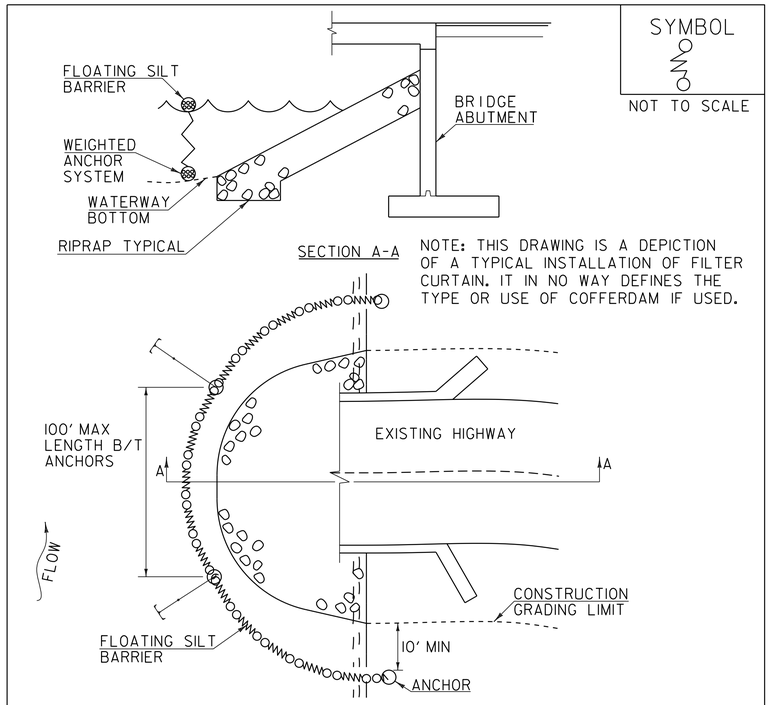

SYMBOL

NOT TO SCALE

NOTE: THIS DRAWING IS A DEPICTION OF A TYPICAL INSTALLATION OF FILTER CURTAIN. IT IN NO WAY DEFINES THE TYPE OR USE OF COFFERDAM IF USED.

CONSTRUCTION SPECIFICATIONS

1. FILTER CURTAIN SHALL NOT BE PLACED ACROSS A FLOWING WATERWAY, OR IN A WATERWAY WITH STREAM VELOCITIES GREATER THAN 1.5 FEET/SECOND.
2. MAXIMUM 100' LENGTH BETWEEN ANCHORS.
3. LAST SECTION SHALL TERMINATE A MINIMUM OF 10' BEYOND LIMIT OF DISTURBANCE.
4. THE WEIGHTED ANCHOR SYSTEM SHALL BE A TYPE WHICH ALLOWS THE CURTAIN TO CONFORM TO THE BOTTOM OF THE WATERWAY.
5. THE CURTAIN SHALL BE REMOVED BY SLOWLY PULLING TOWARD THE SHORE MINIMIZING THE ESCAPE OF SEDIMENTS INTO WATERWAY.

FILTER CURTAIN

THIS WORK SHALL BE PERFORMED IN ACCORDANCE WITH SECTION 649 FOR GEOTEXTILE FOR FILTER CURTAIN (PAY ITEM 649.61).

REVISIONS	
APRIL 1, 2008	WHF
JANUARY 13, 2009	WHF
SEPTEMBER 4, 2009	WHF

EPSC LAYOUT PLAN SYMBOLOGY LEGEND

PROJECT BOUNDARY FENCE

- PDF —— PDF PROJECT DEMARCATION FENCE
- BF —×—×—×— BF BARRIER FENCE

EPSC MEASURES

- FILTER CURTAIN
- SILT FENCE
- SILT FENCE WOVEN WIRE
- CHECK DAM
- DISTURBED AREAS REQUIRING RE-VEGETATION
- EROSION MATTING

ENVIRONMENTAL RESOURCES

- WETLAND BOUNDARY
- RIPARIAN BUFFER ZONE
- SOIL TYPE BOUNDARY
- T&E — THREATENED & ENDANGERED SPECIES
- HAZ — HAZ — HAZARDOUS WASTE AREA
- AG — AGRICULTURAL LAND
- HABITAT — FISH & WILDLIFE HABITAT
- FLOOD PLAIN — FLOOD PLAIN
- STORM WATER
- USDA FOREST SERVICE LANDS
- WILDLIFE HABITAT SUIT/CONN

ARCHEOLOGICAL & HISTORIC

- ARCH — ARCHEOLOGICAL BOUNDARY
- HISTORIC DIST — HISTORIC DISTRICT BOUNDARY
- HISTORIC — HISTORIC AREA
- (H) HISTORIC STRUCTURE

UTILITY SYMBOLOGY

- AER E&T — AREAL ELECTRIC & TELEPHONE
- E — AREAL ELECTRIC
- UE — UNDERGROUND ELECTRIC
- UT — UNDERGROUND TELEPHONE
- UC — UNDER GROUND TV
- G — GAS LINE
- W — WATER LINE

CONSTRUCTION FEATURES

- TOE OF SLOPE CUT OR FILL
- STONE FILL, TYPE III
- STONE FILL, TYPE II
- STONE FILL, TYPE I

PROJECT NAME: MORRISTOWN
PROJECT NUMBER: BRS 0240(3)S

FILE NAME: s78f329alignbdr.dgn
PROJECT LEADER: C. CARLSON
DESIGNED BY: J. GRIFFIN
EROSION CONTROL DETAIL SHEET 1

PLOT DATE: 16-NOV-2015
DRAWN BY:
CHECKED BY: J. LACROIX
SHEET 146 OF 148

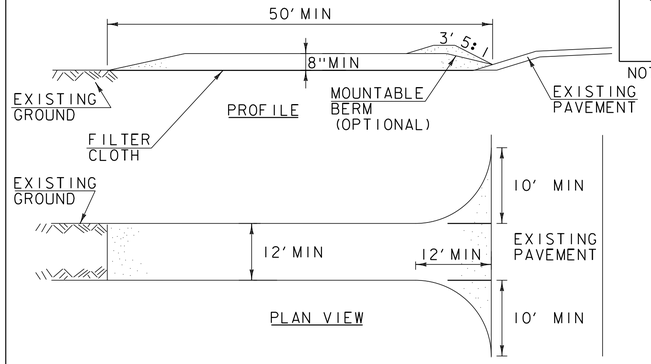

SYMBOL

NOT TO SCALE

CONSTRUCTION SPECIFICATIONS

1. STONE SIZE- USE 1-4" STONE, RECLAIMED OR RECYCLED CONCRETE EQUIVALENT.
2. LENGTH- NOT LESS THAN 50' (EXCEPT ON A SINGLE RESIDENCE LOT WHERE A 30' MINIMUM LENGTH APPLIES).
3. THICKNESS- NOT LESS THAN 8".
4. WIDTH- 12' MINIMUM, BUT NOT LESS THAN THE FULL WIDTH AT POINTS WHERE INGRESS OR EGRESS OCCURS. 24' IF SINGLE ENTRANCE TO SITE.
5. GEOTEXTILE MUST BE PLACED OVER THE ENTIRE AREA PRIOR TO PLACING STONE.
6. SURFACE WATER- ALL SURFACE WATER FLOWING OR DIVERTED TOWARD CONSTRUCTION ENTRANCES SHALL BE PIPED BENEATH THE ENTRANCE. IF PIPING IS IMPRACTICAL, A MOUNTABLE BERM WITH 5:1 SLOPES WILL BE PERMITTED.
7. MAINTENANCE- THE ENTRANCE SHALL BE MAINTAINED IN A CONDITION WHICH WILL PREVENT TRACKING OR FLOWING OF SEDIMENT ONTO PUBLIC RIGHTS-OF-WAY, ALL SEDIMENT SPILLED, DROPPED, WASHED OR TRACKED ONTO PUBLIC RIGHTS-OF-WAY MUST BE REMOVED IMMEDIATELY.
8. WHEN WASHING IS REQUIRED, IT SHALL BE DONE ON AN AREA STABILIZED WITH STONE AND WHICH DRAINS INTO AN APPROVED SEDIMENT TRAPPING DEVICE.
9. PERIODIC INSPECTION AND NEEDED MAINTENANCE SHALL BE PROVIDED ACCORDING TO PERMIT REQUIREMENTS.

ADAPTED FROM DETAILS PROVIDED BY: NEW YORK STATE DEC
ORIGINALLY DEVELOPED BY USDA-NRCS
VERMONT DEPARTMENT OF ENVIRONMENTAL CONSERVATION

STABILIZED CONSTRUCTION ENTRANCE

NOTES:
REFER TO "THE VERMONT STANDARDS & SPECIFICATIONS FOR EROSION PREVENTION & SEDIMENT CONTROL -2006- " FROM THE VT AGENCY OF NATURAL RESOURCES FOR ADDITIONAL GUIDANCE.

THIS WORK SHALL BE PERFORMED IN ACCORDANCE WITH SECTION 653 FOR VEHICLE TRACKING PAD (PAY ITEM 653.35) OR AS SPECIFIED IN THE CONTRACT.

REVISIONS	
MARCH 24, 2008	WHF
JANUARY 13, 2009	WHF

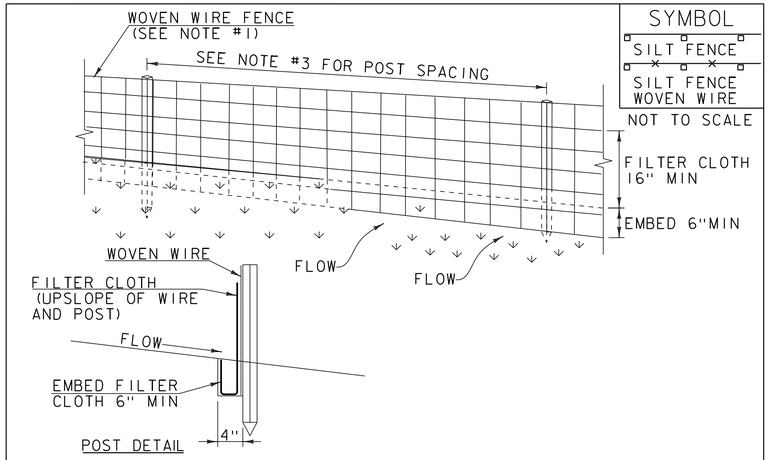

SYMBOL

SILT FENCE

SILT FENCE WOVEN WIRE

NOT TO SCALE

CONSTRUCTION SPECIFICATIONS

1. WOVEN WIRE REINFORCED FENCE IS REQUIRED WITHIN 100' UPSLOPE OF RECEIVING WATERS WHEN THE PROJECT FALLS UNDER A CONSTRUCTION STORMWATER PERMIT. WOVEN WIRE SHALL BE A MIN. 14 GAUGE WITH A 6" MAX. MESH OPENING.
2. FILTER CLOTH SHALL BE EITHER FILTER X, MIRAFI100X, STABILINKA T140N OR APPROVED EQUIVALENT.
3. POST SPACING FOR WIRE-BACKED FENCE SHALL BE 10' MAXIMUM. FOR FILTER-CLOTH FENCE, WHEN ELONGATION IS >50%, POST SPACING SHALL NOT EXCEED 4' AND WHEN ELONGATION IS <50%, POST SPACING SHALL NOT EXCEED 6'.
4. WOVEN WIRE FENCE IS TO BE FASTENED SECURELY TO FENCE POSTS WITH WIRE TIES. FILTER CLOTH IS TO BE FASTENED SECURELY TO WOVEN WIRE FENCE WITH TIES SPACED EVERY 24" AT TOP AND MID SECTION.
5. WHEN TWO SECTIONS OF FILTER CLOTH ADJOIN EACH OTHER THEY SHALL BE OVER-LAPPED BY 6" AND FOLDED.
6. MAINTENANCE SHALL BE PERFORMED AS NEEDED AND MATERIAL REMOVED WHEN SEDIMENT REACHES HALF OF FABRIC HEIGHT.

ADAPTED FROM DETAILS PROVIDED BY: NEW YORK STATE DEC
ORIGINALLY DEVELOPED BY USDA-NRCS
VERMONT DEPARTMENT OF ENVIRONMENTAL CONSERVATION

SILT FENCE

NOTES:
REFER TO "THE VERMONT STANDARDS & SPECIFICATIONS FOR EROSION PREVENTION & SEDIMENT CONTROL -2006- " FROM THE VT AGENCY OF NATURAL RESOURCES FOR ADDITIONAL GUIDANCE.

THIS WORK SHALL BE PERFORMED IN ACCORDANCE WITH SECTION 649 AND AS SHOWN IN THE PLANS FOR GEOTEXTILE FOR SILT FENCE (PAY ITEM 649.51) OR GEOTEXTILE FOR SILT FENCE, WOVEN WIRE REINFORCED (PAY ITEM 649.515).

REVISIONS	
MARCH 21, 2008	WHF
DECEMBER 11, 2008	WHF
JANUARY 13, 2009	WHF

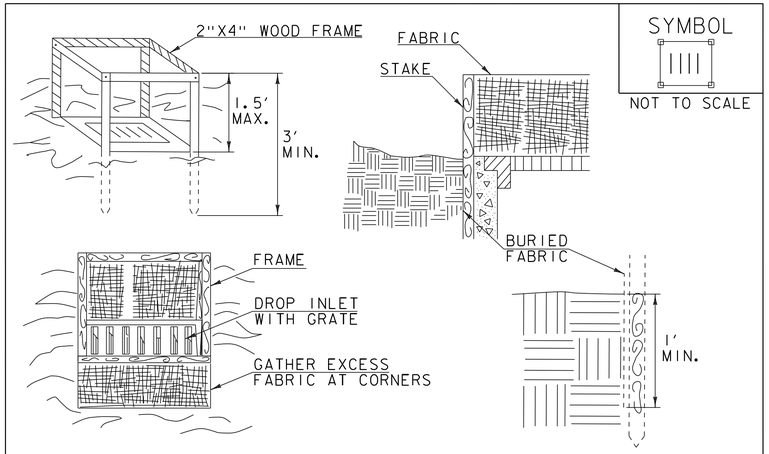

SYMBOL

NOT TO SCALE

CONSTRUCTION SPECIFICATIONS

1. FILTER FABRIC SHALL HAVE AN APPARENT OPENING SIZE OF 40-85. BURLAP MAY BE USED FOR SHORT TERM APPLICATIONS.
2. CUT FABRIC FROM A CONTINUOUS ROLL TO ELIMINATE JOINTS. IF JOINTS ARE NEEDED THEY WILL BE OVERLAPPED TO THE NEXT STAKE.
3. STAKE MATERIALS WILL BE STANDARD 2"x 4" WOOD OR EQUIVALENT METAL WITH A MINIMUM LENGTH OF 3'.
4. SPACE STAKES EVENLY AROUND INLET 3' APART AND DRIVE A MINIMUM 18" DEEP. SPANS GREATER THAN 3' MAY BE BRIDGED WITH THE USE OF WIRE MESH BEHIND THE FILTER FABRIC FOR SUPPORT.
5. FABRIC SHALL BE EMBEDDED 1' MINIMUM BELOW GROUND AND BACKFILLED. IT SHALL BE SECURELY FASTENED TO THE STAKES AND FRAME.
6. A 2" x 4" WOOD FRAME SHALL BE COMPLETED AROUND THE CREST OF THE FABRIC FOR OVER FLOW STABILITY.
7. MAXIMUM DRAINAGE AREA 1 ACRE

ADAPTED FROM DETAILS PROVIDED BY: NEW YORK STATE DEC
ORIGINALLY DEVELOPED BY USDA-NRCS
VERMONT DEPARTMENT OF ENVIRONMENTAL CONSERVATION

FILTER FABRIC DROP INLET PROTECTION

NOTES:
REFER TO "THE VERMONT STANDARDS & SPECIFICATIONS FOR EROSION PREVENTION & SEDIMENT CONTROL -2006- " FROM THE VT AGENCY OF NATURAL RESOURCES FOR ADDITIONAL GUIDANCE.

THIS WORK SHALL BE PERFORMED IN ACCORDANCE WITH SECTION 653 FOR INLET PROTECTION DEVICE, TYPE I (PAY ITEM 653.40).

REVISIONS	
MARCH 7, 2008	WHF
JANUARY 13, 2009	WHF

PROJECT NAME: MORRISTOWN
PROJECT NUMBER: BRS 0240(3)S

FILE NAME: s78f329alignbdr.dgn
PROJECT LEADER: C. CARLSON
DESIGNED BY: J. GRIFFIN
EROSION CONTROL DETAIL SHEET 2

PLOT DATE: 16-NOV-2015
DRAWN BY:
CHECKED BY: J. LACROIX
SHEET 147 OF 148

SYMBOL

FR

NOT TO SCALE

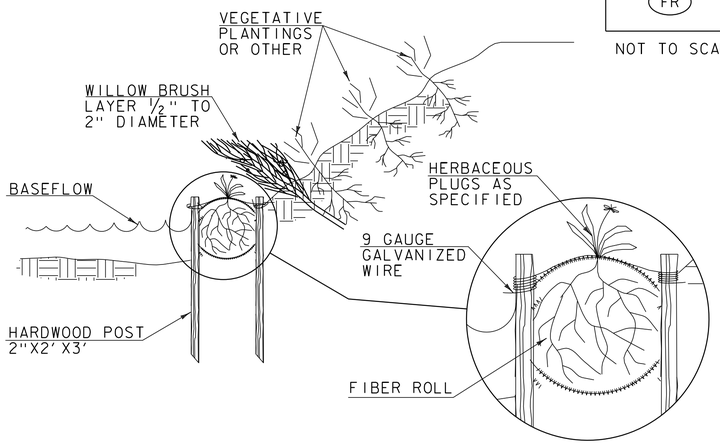

CONSTRUCTION SPECIFICATIONS

1. EXCAVATE A SHALLOW TRENCH SLIGHTLY BELOW BASEFLOW OR A 4" TRENCH ON SLOPE CONTOURS
2. PLACE THE ROLL IN THE TRENCH AND ANCHOR WITH 2"X2" POSTS PLACED ON BOTH SIDES FO THE ROLL AND SPACED LATERALLY ON 2' TO 4' CENTERS. TRIM THE TOP OF THE POSTS EVEN WITH THE EDGE OF THE ROLL, IF NECESSARY.
3. NOTCH THE POSTS AND TIE TOGETHER, ACROSS THE ROLL, WITH 9 GAUGE GALVANIZED WIRE OR 1/8" DIAMETER BRAIDED NYLON ROPE.
4. PLACE SOIL EXCAVATED FROM THE TRENCH BEHIND THE ROLL AND HAND TAMP. PLANT WITH SUITABLE HERBACEOUS OR WOODY VEGETATION AS SPECIFIED ELSEWHERE IN THE CONTRACT DOCUMENTS. VEGETATION SHALL BE PLACED IMMEDIATELY ADJACENT TO THE ROLL TO PROMOTE ROOT GROWTH INTO THE FIBER. HERBACEOUS VEGETATION, IF SPECIFIED, SHALL BE PLANTED INTO THE FIBER ROLL.

ADAPTED FROM DETAILS PROVIDED BY: NEW YORK STATE DEC
ORIGINALLY DEVELOPED BY USDA-NRCS
VERMONT DEPARTMENT OF ENVIRONMENTAL CONSERVATION

FIBER ROLL (EROSION LOG)

NOTES:
REFER TO "THE VERMONT STANDARDS & SPECIFICATIONS FOR EROSION PREVENTION & SEDIMENT CONTROL -2006- " FROM THE VT AGENCY OF NATURAL RESOURCES FOR ADDITIONAL GUIDANCE.

THIS WORK SHALL BE PERFORMED IN ACCORDANCE WITH SECTION 653 FOR EROSION LOG (PAY ITEM 653.60)

REVISIONS	
MARCH 21, 2008	WHF
JANUARY 13, 2009	WHF

SYMBOL

NOT TO SCALE

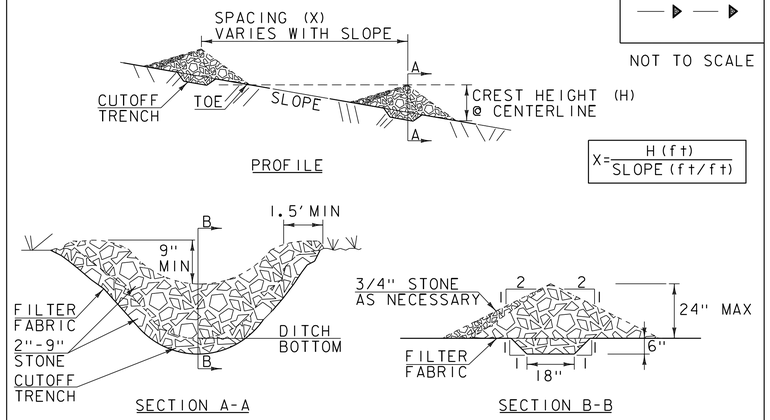

CONSTRUCTION SPECIFICATIONS

1. STONE WILL BE PLACED ON A FILTER FABRIC FOUNDATION.
2. CHECK DAMS SHALL BE SPACED SO THAT THE ELEVATION OF THE CREST OF THE DOWNSTREAM DAM IS AT THE SAME ELEVATION AS THE TOE OF THE UPSTREAM DAM.
3. 3/4" FILTERING STONE MAY BE ADDED TO THE FACE OF THE CHECK DAM AS NECESSARY.
4. EXTEND THE STONE A MINIMUM OF 1.5' BEYOND THE DITCH BANKS TO PREVENT CUTTING AROUND THE DAM.
5. PROTECT CHANNEL DOWNSTREAM OF THE LOWEST CHECK DAM FROM SCOUR AND EROSION WITH STONE OR LINER AS APPROPRIATE.
6. ENSURE THAT CHANNEL APPURTENANCES SUCH AS CULVERT ENTRANCES BELOW CHECK DAMS ARE NOT SUBJECT TO DAMAGE OR BLOCKAGE FROM DISPLACED STONE.
7. MAXIMUM DRAINAGE AREA 2 ACRES.

ADAPTED FROM DETAILS PROVIDED BY: NEW YORK STATE DEC
ORIGINALLY DEVELOPED BY USDA-NRCS
VERMONT DEPARTMENT OF ENVIRONMENTAL CONSERVATION

CHECK DAM

NOTES:
REFER TO "THE VERMONT STANDARDS & SPECIFICATIONS FOR EROSION PREVENTION & SEDIMENT CONTROL -2006- " FROM THE VT AGENCY OF NATURAL RESOURCES FOR ADDITIONAL GUIDANCE.

THIS WORK SHALL BE PERFORMED IN ACCORDANCE WITH SECTION 653 FOR TEMPORARY STONE CHECK DAM, TYPE I (PAY ITEM 653.25)

REVISIONS	
MARCH 21, 2008	WHF
JANUARY 8, 2009	WHF

VAOT LOW GROW/FINE FESCUE MIX

LBS/AC						
WEIGHT	BROADCAST	HYDROSEED	NAME	LATIN NAME	GERM	PURITY
38%	57	95	CREEPING RED FESCUE	FESTUCA RUBRA VAR. RUBRA	90%	98%
29%	43.5	72.5	HARD FESCUE	FESTUCA LONGIFOLIA	85%	95%
15%	22.5	37.5	CHEWINGS FESCUE	FESTUCA RUBRA VAR. COMMUTATA	87%	95%
15%	22.5	37.5	ANNUAL RYEGRASS	LOLIUM MULTIFLORUM	90%	95%
3%	4.5	7.5	INERTS			
100%	150	250				

VAOT RURAL AREA MIX

LBS/AC						
WEIGHT	BROADCAST	HYDROSEED	NAME	LATIN NAME	GERM	PURITY
37.5%	22.5	45	CREEPING RED FESCUE	FESTUCA RUBRA VAR. RUBRA	85%	98%
37.5%	22.5	45	TALL FESCUE	FESTUCA ARUNDINACEA	90%	95%
5.0%	3	6	RED TOP	AGROSTIS GIGANTEA	90%	95%
15.0%	9	18	WHITE FIELD CLOVER	TRIFOLIUM REPENS	85%	98%
5.0%	3	6	ANNUAL RYE GRASS	LOLIUM MULTIFLORUM	85%	95%
100%	60	120				

GENERAL AMENDMENT GUIDANCE

FERTILIZER	LIME	
10/20/10	AG LIME	PELLITIZED
500 LBS/AC	2 TONS/AC	1 TONS/AC

CONSTRUCTION GUIDANCE

1. SEED MIX: THE CONTRACTOR SHALL COORDINATE WITH THE RESIDENT ENGINEER ON WHICH SEED MIX TO USE.
2. SEED MIX: USE AS INDICATED IN THE PLANS AND/OR FOR ALL ESTABLISHED UPLAND (NON WETLAND) AREAS DISTURBED BY THE CONTRACTOR.
3. ALL SEED MIXTURES: SHALL NOT HAVE A WEED CONTENT EXCEEDING 0.40% BY WEIGHT AND SHALL BE FREE OF ALL NOXIOUS SEED.
4. FERTILIZER AND LIMESTONE: SHALL FOLLOW RATES SHOWN ON PLAN OR AS DIRECTED BY THE ENGINEER.
5. HAY MULCH: TO BE PLACED ON EARTH SLOPES AT THE RATE OF 2 TONS/ACRE, ACHIEVE 90% GROUND COVER OR AS DIRECTED BY THE ENGINEER.
6. HYDROSEEDING: ALTHOUGH GUIDANCE IS GIVEN ABOVE THE SITE CONDITIONS AND THE TYPE OF HYDROSEED PROPOSED FOR USE WILL ULTIMATELY DICTATE THE AMOUNTS AND TYPES OF SOIL AMENDMENTS TO BE APPLIED.
7. TURF ESTABLISHMENT: PLACING SEED, FERTILIZER, LIME AND MULCH PRIOR TO SEPTEMBER 15 AND AFTER APRIL 15 CAN BETTER ENSURE A VIGOROUS GROWTH OF GRASS.

ADAPTED FROM VTRANS TECHNICAL LANDSCAPE MANUAL FOR ROADWAYS AND TRANSPORTATION FACILITIES

TURF ESTABLISHMENT

THIS WORK SHALL BE PERFORMED IN ACCORDANCE WITH SECTION 651 FOR SEED (PAY ITEM 651.15)

REVISIONS	
JANUARY 12, 2015	WHF

PROJECT NAME: MORRISTOWN
PROJECT NUMBER: BRS 0240(3)S

FILE NAME: s78f329alignbdr.dgn
PROJECT LEADER: C. CARLSON
DESIGNED BY: J. GRIFFIN
EROSION CONTROL DETAIL SHEET 3

PLOT DATE: 16-NOV-2015
DRAWN BY:
CHECKED BY: J. LACROIX
SHEET 148 OF 148