STATE OF VERMONT
AGENCY OF TRANSPORTATION

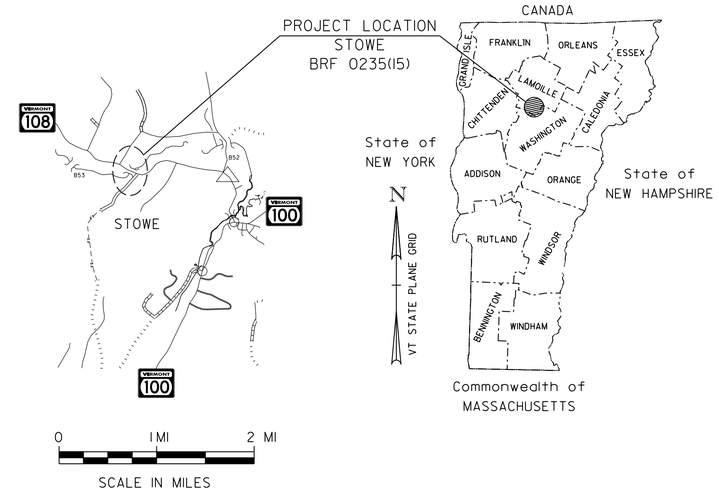

PROPOSED IMPROVEMENT
BRIDGE PROJECT
TOWN OF STOWE
COUNTY OF LAMOILLE
VT ROUTE 108 (MAJOR COLLECTOR) BRIDGE NO. 3

PROJECT LOCATION: LOCATED IN TOWN OF STOWE ON VT ROUTE 108 APPROXIMATELY 1.5 MILES WEST OF THE JUNCTION WITH VT ROUTE 100.

PROJECT DESCRIPTION: WORK TO BE PERFORMED UNDER THIS PROJECT INCLUDES REPLACEMENT OF EXISTING STRUCTURE WITH A NEW STRUCTURE INCLUDING RELATED ROADWAY ITEMS, TEMPORARY BRIDGE, AND CHANNEL WORK.

LENGTH OF STRUCTURE: 146.80 FEET
LENGTH OF ROADWAY: 753.20 FEET
LENGTH OF PROJECT: 900.00 FEET

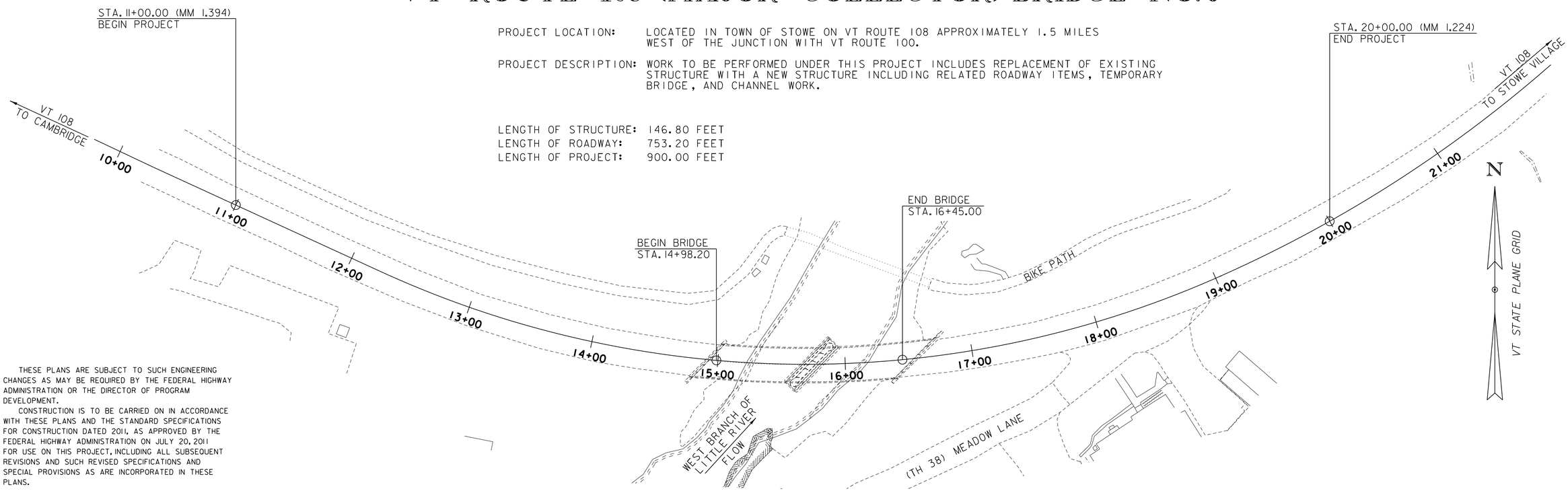

THESE PLANS ARE SUBJECT TO SUCH ENGINEERING CHANGES AS MAY BE REQUIRED BY THE FEDERAL HIGHWAY ADMINISTRATION OR THE DIRECTOR OF PROGRAM DEVELOPMENT.

CONSTRUCTION IS TO BE CARRIED ON IN ACCORDANCE WITH THESE PLANS AND THE STANDARD SPECIFICATIONS FOR CONSTRUCTION DATED 2011, AS APPROVED BY THE FEDERAL HIGHWAY ADMINISTRATION ON JULY 20, 2011 FOR USE ON THIS PROJECT, INCLUDING ALL SUBSEQUENT REVISIONS AND SUCH REVISED SPECIFICATIONS AND SPECIAL PROVISIONS AS ARE INCORPORATED IN THESE PLANS.

SCALE 1" = 40'-0"
40 0 40

QUALITY ASSURANCE PROGRAM : LEVEL 2

SURVEYED BY : VTRANS
SURVEYED DATE : 07/20/2011

DATUM
VERTICAL NAVD 88
HORIZONTAL NAD83 (1996)

CLD CONSULTING ENGINEERS
540 Commercial Street
Manchester, NH 03101
(603) 668-8223
www.cldengineers.com

CHIEF ENGINEER OF THE HIGHWAY DIVISION
APPROVED _____ DATE _____

PROJECT MANAGER : ROB YOUNG, P.E.

PROJECT NAME : STOWE
PROJECT NUMBER : BRF 0235(15)

SHEET 1 OF 79 SHEETS

MODEL: TITLE
CLD 12-0120

STATE OF VERMONT
AGENCY OF TRANSPORTATION

PRELIMINARY INFORMATION SHEET (BRIDGE)

Version 11.06.15

LRFD

INDEX OF SHEETS

PLAN SHEETS

1	TITLE SHEET
2	PRELIMINARY INFORMATION SHEET
3 - 5	TYPICAL SHEETS 1-3
6	TYPICAL EARTHWORK SECTIONS
7 - 9	QUANTITY SHEETS 1-3
10	BRIDGE QUANTITY SHEET
11	GENERAL NOTES
12	CONVENTIONAL SYMBOLOGY LEGEND SHEET
13 - 14	TIE SHEETS 1-2
15 - 16	LAYOUT SHEETS 1-2
17 - 18	VT 108 PROFILE SHEETS 1-2
19	MATERIAL TRANSITION AND BANKING DIAGRAM
20	MEADOW LANE PROFILE SHEET
21	UTILITY RELOCATION SHEET
22	TRAFFIC CONTROL SHEET
23	TRAFFIC CONTROL PROFILE SHEET
24	TRAFFIC CONTROL SIGN PLAN
25 - 26	TRAFFIC SIGN & LINE LAYOUT SHEETS 1-2
27	TRAFFIC SIGN SUMMARY SHEET
28	SIGN DETAIL SHEET
29	LANDSCAPE LAYOUT SHEET
30	LANDSCAPE DETAILS
31	BORING INFORMATION SHEET
32 - 33	BORING LOGS 1-2
34	PLAN AND ELEVATION
35	TYPICAL BRIDGE SECTION
36	DECK REINFORCING PLAN
37 - 38	FRAMING PLAN AND DETAILS 1-2
39	SPLICE DETAILS
40	CAMBER AND DEFLECTION DETAILS
41	BEARING DETAILS
42	ABUTMENT 1 PLAN AND ELEVATION
43	ABUTMENT 2 PLAN AND ELEVATION
44	ABUTMENT 1 PILE CAP PLAN AND ELEVATION
45	ABUTMENT 2 PILE CAP PLAN AND ELEVATION
46 - 47	WINGWALL PLAN AND ELEVATION 1-2
48	WINGWALL AND PILE DETAILS
49	SHEET PILE RETAINING WALL DETAILS
50	APPROACH SLAB DETAILS
51	REINFORCING STEEL SCHEDULE
52	BRIDGE RAIL LAYOUT
53 - 57	VT 108 CROSS SECTIONS
58 - 59	MEADOW LANE CROSS SECTIONS
60 - 63	TEMP DETOUR CROSS SECTIONS
64 - 69	CHANNEL CROSS SECTIONS
70	EPSC NARRATIVE
71 - 76	EPSC PLAN SHEETS
77 - 78	EPSC DETAILS
79	TOWN WATER LINE REFERENCE SHEET

STRUCTURES DETAILS

SD-501.00	CONCRETE DETAILS AND NOTES	02-09-2012
SD-502.00	CONCRETE DETAILS AND NOTES	10-10-2012
SD-516.10	BRIDGE ASPHALTIC PLUG	08-29-2011
SD-602.00	STRUCTURAL STEEL PLATE GIRDER DETIALS AND NOTES	05-02-2011

STANDARDS LIST

B-5	SLOPE GRADING, EMBANKMENTS, MUCK	06-01-1994
B-71	STANDARD FOR RESIDENTIAL AND COMMERCIAL DRIVES	07-08-2005
E-121	STANDARD SIGN PLACEMENT - CONVENTIONAL ROAD	08-08-1995
E-141	REGULATORY SIGN DETAILS	09-20-1995
G-1	STEEL BEAM GUARDRAIL DETAILS (POST, DELINEATOR, TYPICALS)	02-10-2014
G-1B	BOXBEAM GUARD RAIL	06-01-1994
G-1D	STEEL BEAM GUARDRAIL DETAILS (END TERMINAL, ANCHOR, MEDIAN)	02-10-2014
G-16	STEEL BEAM GUARDRAIL ATTACHMENTS TO EXISTING BRIDGE	06-01-1994
G-19	GENERIC GRADING PLANS FOR GUARDRAIL END TERMINALS	11-15-2002
J-3	MAIL BOX SUPPORT DETAILS	08-07-1995
S-364A	BRIDGE RAILING, GALVANIZED 3 RAIL BOX BEAM	04-23-2012
S-364B	GUARDRAIL APPROACH SECTION, GALVANIZED 3 RAIL BOX BEAM	04-23-2012
S-364C	GUARDRAIL APPROACH SECTION, GALVANIZED 3 RAIL BOX BEAM	04-23-2012
S-364D	GUARDRAIL APPROACH SECTION, GALVANIZED 3 RAIL BOX BEAM	04-23-2012
T-1	TRAFFIC CONTROL GENERAL NOTES	08-06-2012
T-10	CONVENTIONAL ROADS CONSTRUCTION APPROACH SIGNING	08-06-2012
T-17	TRAFFIC CONTROL MISCELLANEOUS DETAILS	08-06-2012
T-28	CONSTRUCTION SIGN DETAILS	08-06-2012
T-30	CONSTRUCTION SIGN DETAILS	08-06-2012
T-35	CONSTRUCTION ZONE LONGITUDINAL DROP-OFFS	08-06-2012
T-42	BRIDGE NUMBER PLAQUE	04-09-2014
T-45	SQUARE TUBE SIGN POST AND ANCHOR	01-02-2013

FINAL HYDRAULIC REPORT

HYDROLOGIC DATA

Date: May 2013

DRAINAGE AREA : 23.8 sq. mi.
CHARACTER OF TERRAIN : Hilly to mountainous
STREAM CHARACTERISTICS : Sinuous, semi-alluvial, incised, past degradation
NATURE OF STREAMBED : Gravel, cobbles, some boulders and some ledge upstream

PEAK FLOW DATA

Q 2.33 =	1300 cfs	Q 50 =	3550 cfs
Q 10 =	2350 cfs	Q 100 =	4200 cfs
Q 25 =	3000 cfs	Q 500 =	5750 cfs

DATE OF FLOOD OF RECORD : Unknown
ESTIMATED DISCHARGE: Unknown
WATER SURFACE ELEV.: Unknown
NATURAL STREAM VELOCITY : @ Q50 = 13.1 fps
ICE CONDITIONS : Moderate
DEBRIS: Moderate
DOES THE STREAM REACH MAXIMUM HIGHWATER ELEV. RAPIDLY? Yes
IS ORDINARY RISE RAPID? Yes
IS STAGE AFFECTED BY UPSTREAM OR DOWNSTREAM CONDITIONS? No
IF YES, DESCRIBE:

WATERSHED STORAGE: <1%
HEADWATERS:
UNIFORM: X
IMMEDIATELY ABOVE SITE:

EXISTING STRUCTURE INFORMATION

STRUCTURE TYPE: Two-span rolled beam bridge with concrete deck
YEAR BUILT: Built 1938, reconstructed 1975
CLEAR SPAN(NORMAL TO STREAM): Two spans of 58' = 116' total
VERTICAL CLEARANCE ABOVE STREAMBED: 19'
WATERWAY OF FULL OPENING: 1500 sq. ft.
DISPOSITION OF STRUCTURE: Remove
TYPE OF MATERIAL UNDER SUBSTRUCTURE: See boring logs

WATER SURFACE ELEVATIONS AT:

Q2.33 =	731.0'	VELOCITY =	6.8 fps
Q10 =	733.2'	"	7.9 fps
Q25 =	734.1'	"	8.8 fps
Q50 =	734.9'	"	9.5 fps
Q100 =	735.6'	"	10.6 fps

LONG TERM STREAMBED CHANGES: There is evidence of past stream bed degradation

IS THE ROADWAY OVERTOPPED BELOW Q100: No
FREQUENCY: Above Q100
RELIEF ELEVATION: 741.7'
DISCHARGE OVER ROAD @Q100: None

UPSTREAM STRUCTURE

TOWN:	Stowe	DISTANCE:	4,000'
HIGHWAY # :	TH 5 (FAS 0236) (Luce Hill Road)	STRUCTURE #:	53
CLEAR SPAN:	about 55'	CLEAR HEIGHT:	20'
YEAR BUILT:	Built 1952, reconstructed 1982	FULL WATERWAY:	NA
STRUCTURE TYPE:	Single span steel beam bridge with concrete deck		

DOWNSTREAM STRUCTURE

TOWN:	Stowe	DISTANCE:	6,400'
HIGHWAY # :	TH 6 (Weeks Hill Road)	STRUCTURE #:	52
CLEAR SPAN:	about 61'	CLEAR HEIGHT:	16'
YEAR BUILT:	1958	FULL WATERWAY:	NA
STRUCTURE TYPE:	Single span steel beam bridge with concrete deck		

PROPOSED STRUCTURE

STRUCTURE TYPE: Single span curved girder bridge with concrete deck

CLEAR SPAN(NORMAL TO STREAM): 102'
VERTICAL CLEARANCE ABOVE STREAMBED: 16'
WATERWAY OF FULL OPENING: 1120 sq. ft.

WATER SURFACE ELEVATIONS AT:

Q2.33 =	729.7'	VELOCITY=	8.5 fps
Q10 =	731.5'	"	10.7 fps
Q25 =	732.5'	"	12.5 fps
Q50 =	733.2'	"	13.1 fps
Q100 =	734.1'	"	13.8 fps

IS THE ROADWAY OVERTOPPED BELOW Q100: No
FREQUENCY: Above Q100
RELIEF ELEVATION: 741.7'
DISCHARGE OVER ROAD @Q100: None

AVERAGE LOW ELEVATION OF SUPERSTRUCTURE: 739.4'
VERTICAL CLEARANCE: @ Q50 = 6.2'

SCOUR: Contraction scour = 1' up to Q100 and 5' at Q500.

REQUIRED CHANNEL PROTECTION: Stone Fill, Type IV

PERMIT INFORMATION

		DEPTH OR ELEVATION:
AVERAGE DAILY FLOW:	50 cfs	
ORDINARY LOW WATER:	25 cfs	Depth = 1'
ORDINARY HIGH WATER:	560 cfs	Depth = 3'

TEMPORARY BRIDGE REQUIREMENTS

STRUCTURE TYPE: Single span bridge
CLEAR SPAN (NORMAL TO STREAM): 80' minimum, centered on channel
VERTICAL CLEARANCE ABOVE STREAMBED: Elevation 734.0' minimum
WATERWAY AREA OF FULL OPENING: 580 sq. ft. minimum

ADDITIONAL INFORMATION

TRAFFIC MAINTENANCE NOTES

1. MAINTAIN TWO-WAY TRAFFIC ON A TEMPORARY BRIDGE.
2. TRAFFIC SIGNALS ARE NOT NECESSARY.
3. SIDEWALKS ARE NOT NECESSARY
4. THE APPROACHES FOR THE TEMPORARY BRIDGE SHALL BE PAVED.

DESIGN VALUES

1. DESIGN LIVE LOAD		HL-93
2. FUTURE PAVEMENT	d_p:	2.5 INCH
3. DESIGN SPAN	L:	145.00 FT
4. MIN. MID-SPAN POS. CAMBER @ RELEASE (PRESTRESSED UNITS)	Δ:	- - -
5. PRESTRESSING STRAND	f_y:	- - -
6. PRESTRESSED CONCRETE STRENGTH	f'_c:	- - -
7. PRESTRESSED CONCRETE RELEASE STRENGTH	f'_{ci}:	- - -
8. CONCRETE, HIGH PERFORMANCE CLASS AA	f'_c:	- - -
9. CONCRETE, HIGH PERFORMANCE CLASS A	f'_c:	4.0 KSI
10. CONCRETE, HIGH PERFORMANCE CLASS B	f'_c:	3.5 KSI
11. CONCRETE, CLASS C	f'_c:	- - -
12. REINFORCING STEEL	f_y:	60 KSI
13. STRUCTURAL STEEL AASHTO M270 (WEATHERING)	f_y:	50 KSI
14. SOIL UNIT WEIGHT	γ:	0.140 KCF
15. NOMINAL BEARING RESISTANCE OF SOIL	q_n:	- - -
16. SOIL BEARING RESISTANCE FACTOR (REFER TO AASHTO LRFD)	ϕ:	- - -
17. NOMINAL BEARING RESISTANCE OF ROCK	q_n:	- - -
18. ROCK BEARING RESISTANCE FACTOR (REFER TO AASHTO LRFD)	ϕ:	- - -
19. NOMINAL AXIAL PILE RESISTANCE	q_p:	521 KIP
20. PILE YIELD STRENGTH ASTM A572	f_y:	50 KSI
21. PILE SIZE		HP 12x63
22. EST. PILE LENGTH	L_p:	64' ABUT 1
	L_p:	47' ABUT 2
23. PILE RESISTANCE FACTOR	ϕ:	0.50
24. LATERAL PILE DEFLECTION	Δ:	0.74 IN
25. BASIC WIND SPEED	V_{3s}:	- - -
26. MINIMUM GROUND SNOW LOAD	p_g:	- - -
27. SEISMIC DATA PGA: - - -	S_s:	- - -
	S_1:	- - -

LRFR LOAD RATING FACTORS

LOADING LEVELS	TRUCK						
	H-20	HL-93	3S2	6 AXLE	3A. STR.	4A. STR.	5A. SEMI
TONNAGE	20	36	36	66	30	34.5	38
INVENTORY	1.40	1.23					
POSTING							
OPERATING	1.88	1.60	3.77	2.51	2.51	3.17	3.55
COMMENTS:							

AS BUILT "REBAR" DETAIL

LEVEL I	LEVEL II	LEVEL III
TYPE:	TYPE:	TYPE:
GRADE:	GRADE:	GRADE:

PILE DRIVING AND TESTING REQUIREMENTS

1 NOMINAL PILE DRIVING CAPACITY	400 KIP
2 PILE TEST RESISTANCE FACTOR	0.65
3 MAXIMUM PILE LENGTHS	SEE DESIGN VALUES
4 SEE GENERNAL NOTES FOR MINIMUM PILE LENGTH	

TRAFFIC DATA

YEAR	ADT	DHV	% D	% T	ADTT
2014	8200	1100	52	5.7	480
2034	8700	1200	52	8.6	780

20 year ESAL for flexible pavement from 2014 to 2034 : 1920000
40 year ESAL for flexible pavement from 2014 to 2054 : 4446000
Design Speed : 30 mph

TEMPORARY BRIDGE PROFILE ALONG TEMP CL

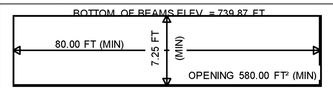

PROJECT NAME: STOWE
PROJECT NUMBER: BRF 0235(15)

FILE NAME: z88cl90pi.dgn
PROJECT LEADER: J. BYATT
DESIGNED BY: K. RUTTER
PRELIMINARY INFORMATION SHEET
PLOT DATE: 3/9/2015
DRAWN BY: M. SMITH
CHECKED BY: J. BYATT
SHEET 2 OF 79

MODEL: PI
CLD 12-0120

MATERIAL TOLERANCES

SURFACE	
- PAVEMENT (TOTAL THICKNESS)	+/- 1/4"
- AGGREGATE SURFACE COURSE	+/- 1/2"
SUBBASE	+/- 1"
SAND BORROW	+/- 1"

3" BITUMINOUS CONCRETE PAVEMENT (2-1½" LIFTS) (TYPE IVS)
5" BITUMINOUS CONCRETE PAVEMENT (2-2½" LIFTS) (TYPE IIS)
24" SUBBASE OF DENSE GRADED CRUSHED STONE
30" SAND BORROW

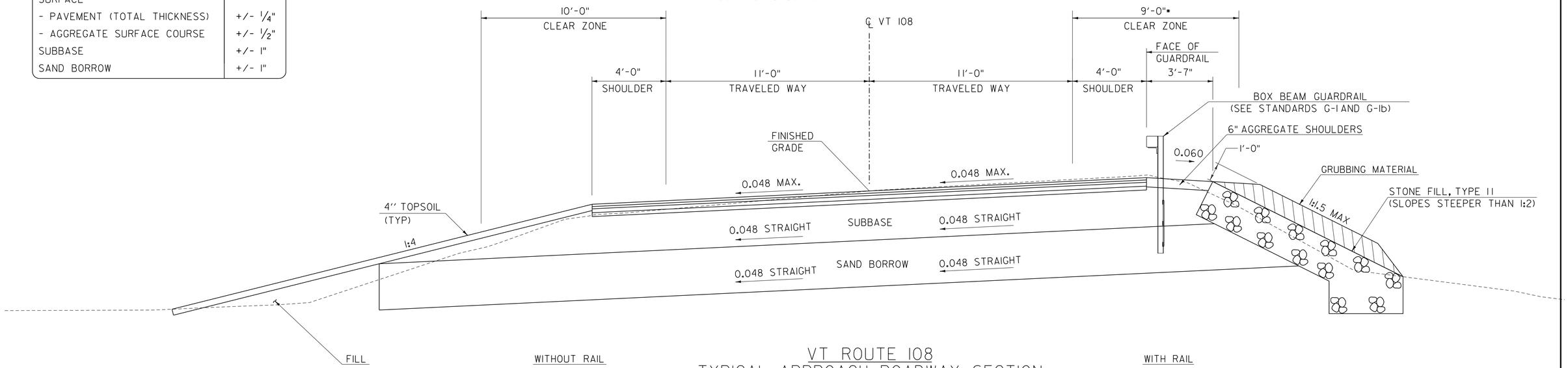

VT ROUTE 108
TYPICAL APPROACH ROADWAY SECTION

SCALE: 3/8" = 1'-0"

*BASED ON 5'-0" DEFLECTION FOR BOX BEAM GUARDRAIL

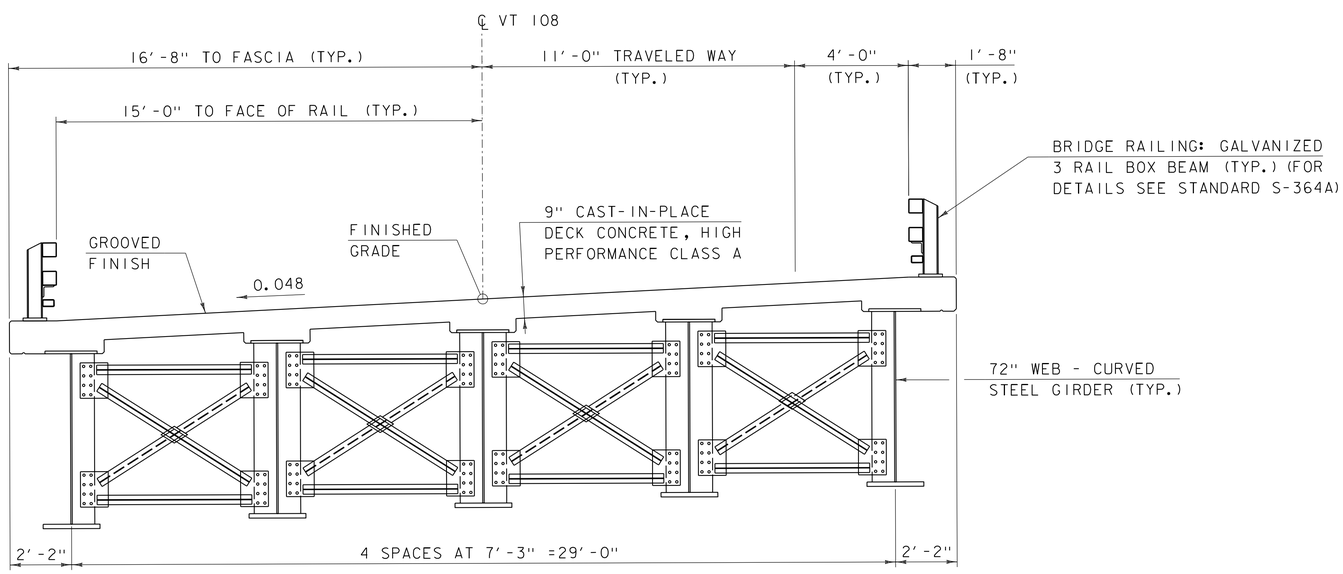

TYPICAL BRIDGE SECTION

SCALE: 3/8" = 1'-0"

PROJECT NAME: STOWE	
PROJECT NUMBER: BRF 0235(15)	
FILE NAME: z88c190typ.dgn	PLOT DATE: 3/9/2015
PROJECT LEADER: J. BYATT	DRAWN BY: S. FORTIER
DESIGNED BY: K. RUTTER	CHECKED BY: C. GREGORY
TYPICAL SHEET 1	SHEET 3 OF 79

CLD 12-0120 MODEL: 01

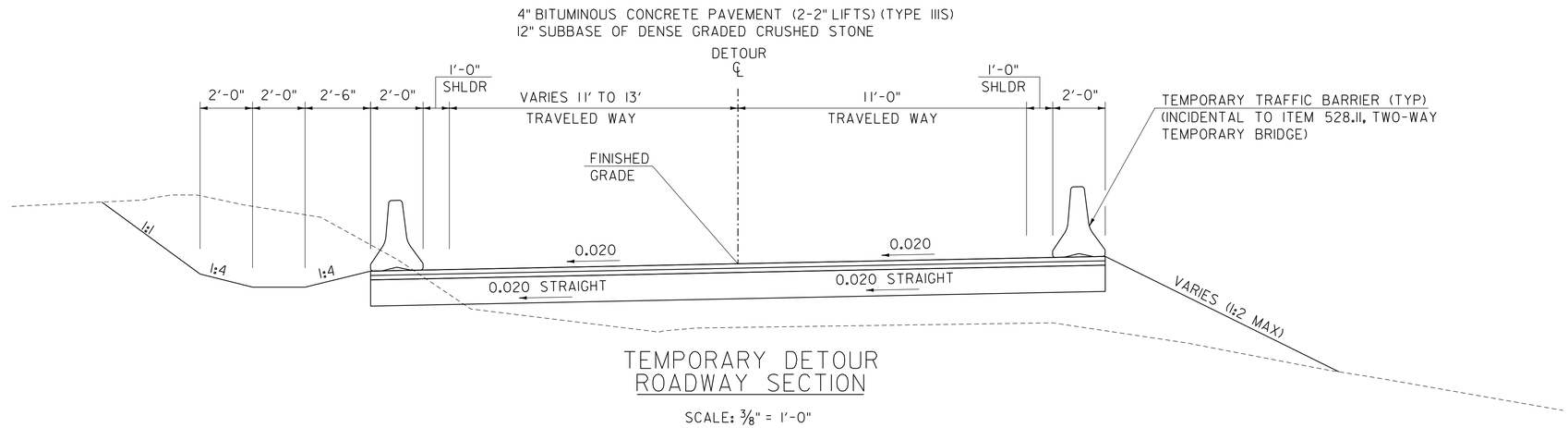

TEMPORARY DETOUR ROADWAY SECTION

SCALE: 3/8" = 1'-0"

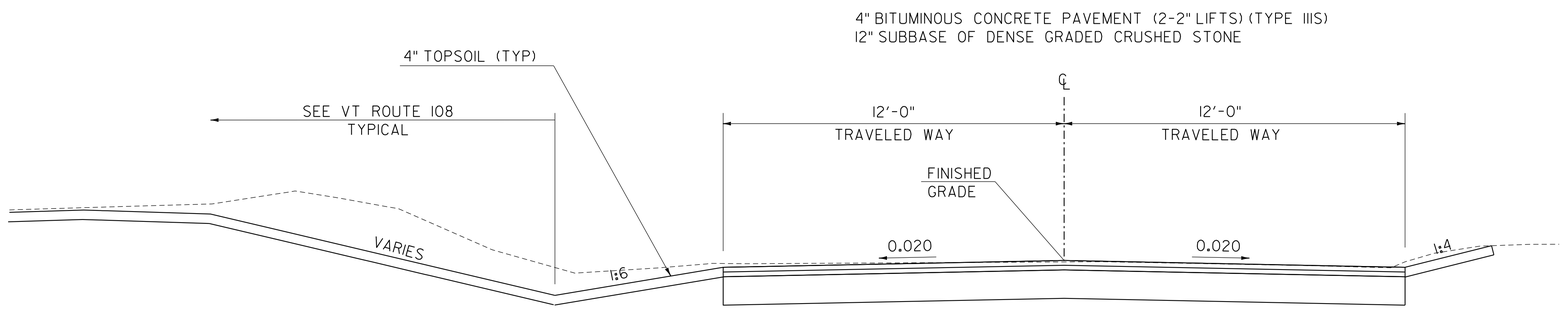

MEADOW LANE - PAVED STA 42+33 TO 43+20

SCALE: 3/8" = 1'-0"

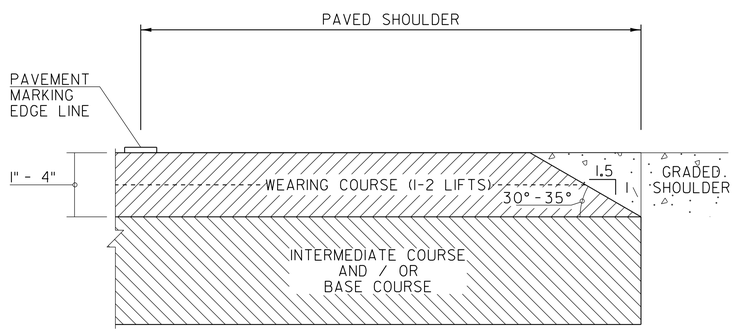

SAFETY EDGE DETAIL

NOT TO SCALE

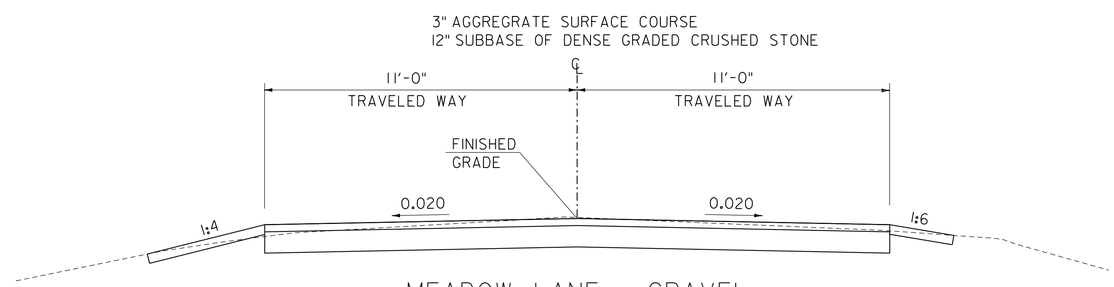

MEADOW LANE - GRAVEL STA 40+45 TO 42+33

SCALE: 3/8" = 1'-0"

NOTES:

1. LEVELING COURSE MAY INCLUDE THE "SAFETY EDGE" AT THE CONTRACTOR'S CHOICE.
2. THE EDGE OF PAVEMENT SHALL BE FORMED IN SUCH A WAY THAT BITUMINOUS CONCRETE PAVEMENT IS EXTRUDED OR COMPRESSED TO FORM THE 30 TO 35 DEGREE ANGLE. DEVICES THAT SIMPLY STRIKE-OFF THE MIX WITHOUT PROVIDING ANY COMPACTIVE EFFORT WILL NOT BE ALLOWED.

PROJECT NAME: STOWE	
PROJECT NUMBER: BRF 0235(15)	
FILE NAME: z88c190typ.dgn	PLOT DATE: 3/9/2015
PROJECT LEADER: J. BYATT	DRAWN BY: S. FORTIER
DESIGNED BY: K. RUTTER	CHECKED BY: C. GREGORY
TYPICAL SHEET 2	SHEET 4 OF 79

CONSULTING ENGINEERS

CLD 12-0120 MODEL: 02

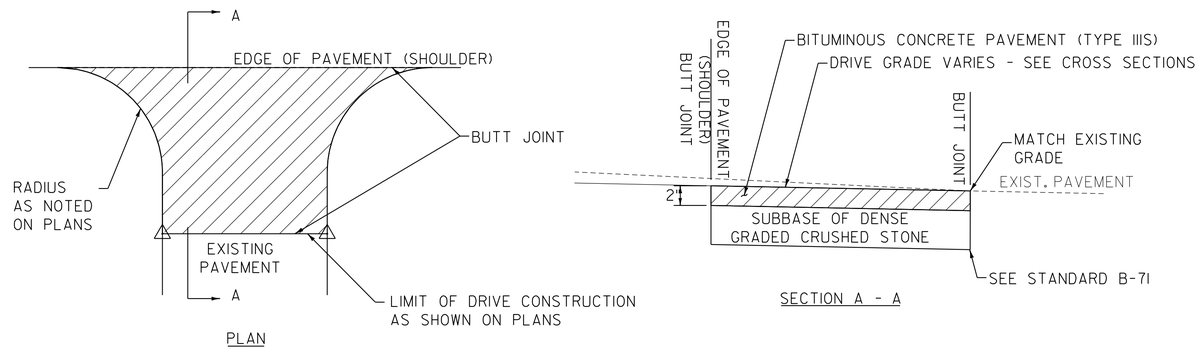

PAVED DRIVEWAY DETAIL

(NOT TO SCALE)

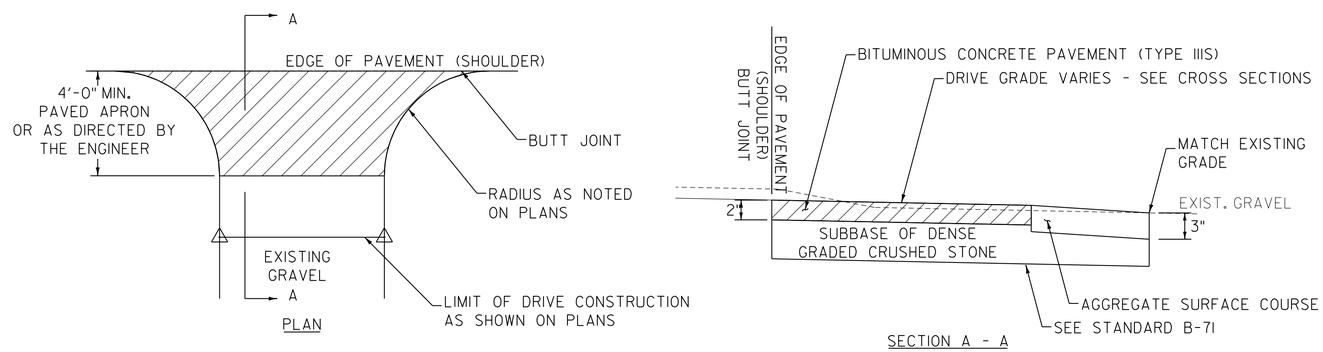

GRAVEL DRIVEWAY DETAIL

(NOT TO SCALE)

NOTES

1. ALL UNPAVED DRIVES SHALL HAVE A 4' APRON AND BE PAVED WITH 2" BITUMINOUS CONCRETE PAVEMENT (TYPE IIIS). REFER TO STANDARD PLAN B-71 FOR ADDITIONAL INFORMATION. DRIVEWAYS LOCATED ALONG GRAVEL ROADWAYS SHALL NOT RECEIVE A PAVED APRON, THE DRIVEWAY WILL BE TIED INTO THE GRAVEL ROADWAY WITH AGGREGATE SURFACE COURSE.

2. BITUMINOUS CONCRETE PAVEMENT WORK, WHICH WILL INVOLVE SOME HAND-WORK (SUCH AS PUBLIC AND/OR PRIVATE DRIVES), SHALL BE PAID FOR UNDER ITEM 900.675 - SPECIAL PROVISION (HAND-PLACED BITUMINOUS CONCRETE MATERIAL, DRIVES). BITUMINOUS CONCRETE MATERIAL PLACED BY MECHANICAL METHODS AT THESE LOCATIONS AND ALL OTHER BITUMINOUS CONCRETE PAVEMENT MATERIAL PLACED WITHIN THE PROJECT LIMITS SHALL BE PAID UNDER ITEM 900.680 SPECIAL PROVISION (BITUMINOUS CONCRETE PAVEMENT, SMALL QUANTITY).

LEGEND

ITEM 900.675 - SPECIAL PROVISION (HAND-PLACED BITUMINOUS CONCRETE MATERIAL, DRIVES)

PROJECT NAME: STOWE	
PROJECT NUMBER: BRF 0235(15)	
FILE NAME: z88c190typ.dgn	PLOT DATE: 3/9/2015
PROJECT LEADER: J. BYATT	DRAWN BY: K. RUTTER
DESIGNED BY: K. RUTTER	CHECKED BY: C. GREGORY
TYPICAL SHEET 3	SHEET 5 OF 79

CONSULTING ENGINEERS

CLD 12-0120 MODEL: 03

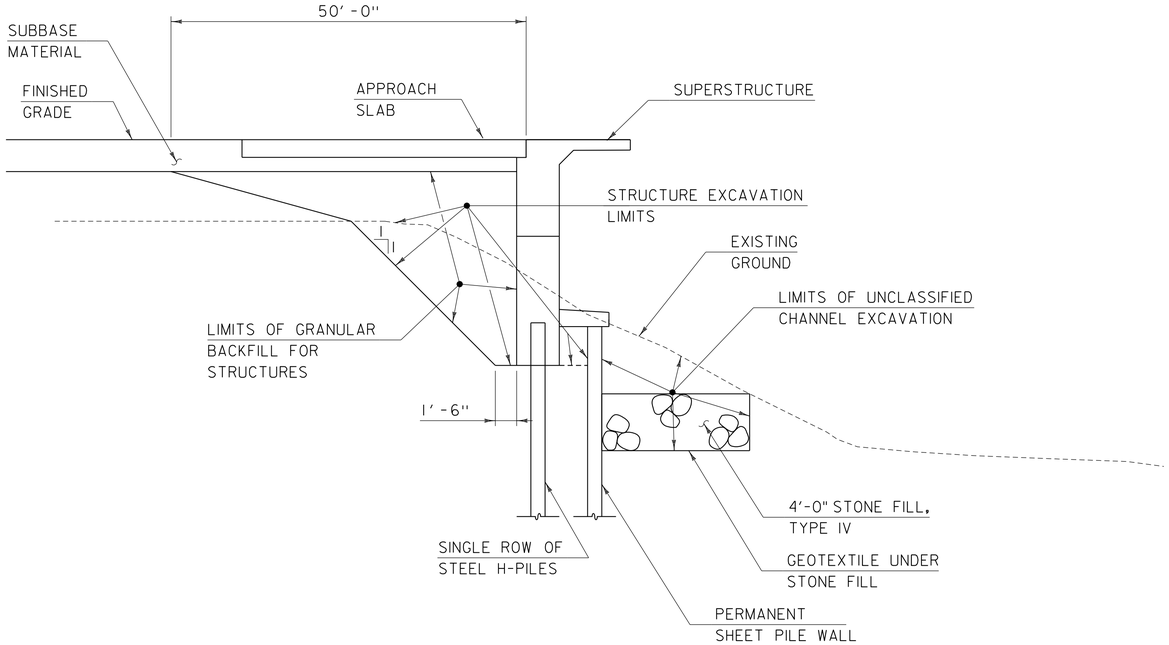

TYPICAL ABUT. 1 EARTHWORK SECTION

SCALE: 3/16" = 1'-0"

1. ACTUAL EXCAVATION LIMITS SHALL BE DETERMINED BY THE CONTRACTOR. HOWEVER, PAYMENT UNDER CONTRACT ITEM 204.25 WILL ONLY BE MADE TO THE LIMITS SHOWN.

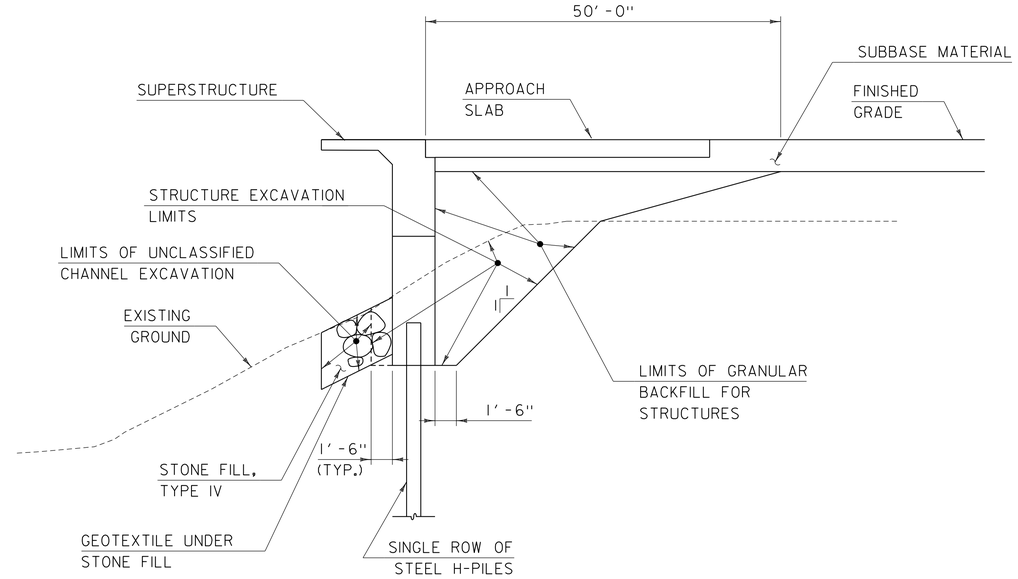

TYPICAL ABUT. 2 EARTHWORK SECTION

SCALE: 3/16" = 1'-0"

1. ACTUAL EXCAVATION LIMITS SHALL BE DETERMINED BY THE CONTRACTOR. HOWEVER, PAYMENT UNDER CONTRACT ITEM 204.25 WILL ONLY BE MADE TO THE LIMITS SHOWN.

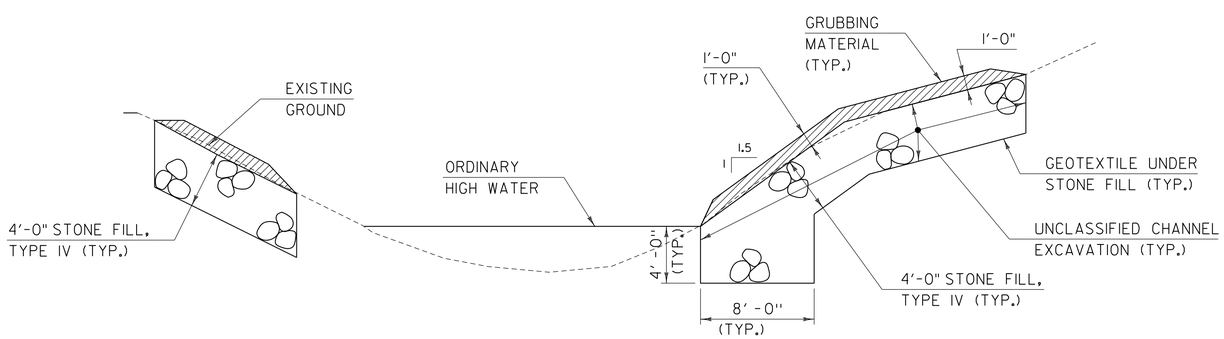

TYPICAL CHANNEL SECTION

SCALE: 3/16" = 1'-0"

- GRUBBING MATERIAL SHALL NOT BE PLACED ON THE STONE FILL IN THE AREA UNDER THE BRIDGE. WHENEVER CHANNEL SLOPE INTERSECTS ROADWAY SUBBASE, GRUBBING MATERIAL SHALL BEGIN AT THE BOTTOM OF SUBBASE.

PROJECT NAME: STOWE	
PROJECT NUMBER: BRF 0235(15)	
FILE NAME: z88cl90sub.dgn	PLOT DATE: 3/9/2015
PROJECT LEADER: J. BYATT	DRAWN BY: M. SMITH
DESIGNED BY: J. FRENCH	CHECKED BY: J. BYATT
TYPICAL EARTHWORK SECTIONS	SHEET 6 OF 79

CONSULTING ENGINEERS

CLD 12-0120 MODEL: TYPICAL EARTH WORKS

STATE OF VERMONT
AGENCY OF TRANSPORTATION

QUANTITY SHEET 1

SUMMARY OF ESTIMATED QUANTITIES / TOTALS / DESCRIPTIONS

ROADWAY	ROADWAY (NO FEDERAL/STATE	LANDSCAPING	EROSION CONTROL	BRIDGE	FULL C.E. ITEMS	GRAND TOTAL	FINAL	UNIT	ITEMS	ITEM NUMBER	ROUND
1						1		LS	CLEARING AND GRUBBING, INCLUDING INDIVIDUAL TREES AND STUMPS	201.10	-
6200						6200		CY	COMMON EXCAVATION	203.15	39
				545		545		CY	UNCLASSIFIED CHANNEL EXCAVATION	203.27	-
2850						2850		CY	SAND BORROW	203.31	44
50						50		CY	TRENCH EXCAVATION OF EARTH	204.20	5.1
1						1		CY	TRENCH EXCAVATION OF EARTH, EXPLORATORY (N.A.B.I.)	204.22	-
				430		430		CY	STRUCTURE EXCAVATION	204.25	-
				340		340		CY	GRANULAR BACKFILL FOR STRUCTURES	204.30	-
3150						3150		SY	COLD PLANING, BITUMINOUS PAVEMENT	210.10	20
2600						2600		CY	SUBBASE OF DENSE GRADED CRUSHED STONE	301.35	41
50						50		CY	AGGREGATE SURFACE COURSE	401.10	4.3
155						155		TON	AGGREGATE SHOULDERS	402.12	3
26						26		CWT	EMULSIFIED ASPHALT	404.65	1.3
1						1		LU	PRICE ADJUSTMENT, ASPHALT CEMENT (N.A.B.I.)	406.50	-
				281		281		CY	CONCRETE, HIGH PERFORMANCE CLASS A	501.33	-
				72		72		CY	CONCRETE, HIGH PERFORMANCE CLASS B	501.34	-
				1		1		LS	FURNISHING EQUIPMENT FOR DRIVING PILING	504.10	-
				606		606		LF	STEEL PILING, HP 12 X 63	505.155	-
				2227		2227		SF	PERMANENT STEEL SHEET PILING (Z MIN.= 48.9 IN^3)	505.35	
				2		2		EACH	DYNAMIC PILE LOADING TEST	505.45	-
				301070		301070		LB	STRUCTURAL STEEL, CURVED PLATE GIRDER	506.56	-
380				11612		11992		LB	REINFORCING STEEL, LEVEL I	507.11	-
				47712		47712		LB	REINFORCING STEEL, LEVEL II	507.12	-
				1		1		LS	SHEAR CONNECTORS (1180 - 7" x 7/8")	508.15	
				550		550		SY	LONGITUDINAL DECK GROOVING	509.10	
				41		41		GAL	WATER REPELLENT, SILANE	514.10	-
				63		63		LF	BRIDGE EXPANSION JOINT, ASPHALTIC PLUG	516.10	-
				299.75		299.75		LF	BRIDGE RAILING, GALVANIZED 3 RAIL BOX BEAM	525.335	-
				1		1		LS	TWO-WAY TEMPORARY BRIDGE (3840 SF - EST.)	528.11	
				1		1		EACH	REMOVAL OF STRUCTURE (5747 SF - EST.)	529.15	
3						3		CY	CONCRETE, CLASS B	541.25	0.95
10						10		CY	CONTROLLED DENSITY (FLOWABLE) FILL	541.45	0.3
									BEGIN OPTION AA		
52						52		LF	18" CAAP .060 (2-2/3 X 1/2)	601.0215	-
52						52		LF	18" PCCSP .064 (2-2/3 X 1/2)	601.0415	-
52						52		LF	18" RCP CLASS III	601.0815	-
52						52		LF	18" CPEP(SL)	601.2615	-
									END OPTION AA		

DETAILED SUMMARY OF QUANTITIES

QUANTITIES	UNIT	ITEMS
		EARTHWORK SUMMARY
6200	CY	COMMON EXCAVATION
545	CY	UNCLASSIFIED CHANNEL EXCAVATION
430	CY	STRUCTURE EXCAVATION
7175		SUBTOTAL
5		ROUNDING
7180		TOTAL FILL AVAILABLE
86		TOTAL FILL REQUIRED (1.15 FACTOR)
7094		TOTAL WASTE

PROJECT NAME: STOWE
PROJECT NUMBER: BRF 0235(15)

FILE NAME: z88c190qty.dgn
PROJECT LEADER: J. BYATT
DESIGNED BY: K. RUTTER
QUANTITY SHEET 1

PLOT DATE: 3/9/2015
DRAWN BY: K. RUTTER
CHECKED BY: C. GREGORY
SHEET 7 OF 79

CLD CONSULTING ENGINEERS

CLD 12-0120 MODEL: OS#1

STATE OF VERMONT
AGENCY OF TRANSPORTATION

QUANTITY SHEET 2

SUMMARY OF ESTIMATED QUANTITIES								TOTALS		DESCRIPTIONS				DETAILED SUMMARY OF QUANTITIES		
	ROADWAY	ROADWAY (NO FEDERAL/STATE	LANDSCAPING	EROSION CONTROL	BRIDGE	FULL C.E. ITEMS		GRAND TOTAL	FINAL	UNIT	ITEMS	ITEM NUMBER	ROUND	QUANTITIES	UNIT	ITEMS
											BEGIN OPTION BB					
	1							1		EACH	18" CAAPES .060 (2-2/3 X 1/2)	601.6215	-			
	1							1		EACH	18" RCPES CLASS III	601.6815	-			
	1							1		EACH	18" CPEPES	601.7015	-			
											END OPTION BB					
	1							1		HR	POWER BROOM RENTAL, TYPE I	608.30	0.5			
	200							200		MGAL	DUST CONTROL WITH WATER	609.10	16			
				150				150		CY	STONE FILL, TYPE II	613.11	7			
					650			650		CY	STONE FILL, TYPE IV	613.13	-			
	2							2		EACH	YIELDING MARKER POSTS	619.17	-			
	55							55		LF	REMOVING AND RESETTING FENCE	620.50	3			
	762							762		LF	BOX BEAM GUARDRAIL	621.30	-			
	4							4		EACH	MANUFACTURED TERMINAL SECTION, TANGENT	621.51	-			
					4			4		EACH	GUARDRAIL APPROACH SECTION, GALVANIZED 3 RAIL BOX BEAM	621.725	-			
	850							850		LF	REMOVAL AND DISPOSAL OF GUARDRAIL	621.80	-			
	300							300		HR	UNIFORMED TRAFFIC OFFICERS	630.10	EST.			
	600							600		HR	FLAGGERS	630.15	EST.			
						1		1		LS	FIELD OFFICE, ENGINEERS	631.10	-			
						1		1		LS	TESTING EQUIPMENT, CONCRETE	631.16	-			
						1		1		LS	TESTING EQUIPMENT, BITUMINOUS	631.17	-			
						3000		3000		DL	FIELD OFFICE TELEPHONE (N.A.B.I.)	631.26	EST.			
	1							1		LS	MOBILIZATION/DEMOBILIZATION	635.11	-			
	1							1		LS	TRAFFIC CONTROL	641.10	-			
	2							2		EACH	PORTABLE CHANGEABLE MESSAGE SIGN	641.15	-			
											BEGIN OPTION CC					
	2250							2250		LF	DURABLE 4 INCH WHITE LINE, THERMOPLASTIC	646.402	1			
	2250							2250		LF	DURABLE 4 INCH WHITE LINE, POLYUREA	646.404	1			
											END OPTION CC					
											BEGIN OPTION DD					
	2200							2200		LF	DURABLE 4 INCH YELLOW LINE, TYPE C TAPE	646.4113	-			
	2200							2200		LF	DURABLE 4 INCH YELLOW LINE, POLYUREA	646.414	-			
											END OPTION DD					
											BEGIN OPTION EE					
	15							15		LF	DURABLE 24 INCH STOP BAR, THERMOPLASTIC	646.482	4			
	15							15		LF	DURABLE 24 INCH STOP BAR, POLYUREA	646.484	4			
											END OPTION EE					
											BEGIN OPTION FF					
	4							4		EACH	DURABLE LETTER OR SYMBOL, THERMOPLASTIC	646.492	-			
	4							4		EACH	DURABLE LETTER OR SYMBOL, POLYUREA	646.494	-			
											END OPTION FF					

CLD 12-0120 MODEL: QS#2

CONSULTING ENGINEERS

PROJECT NAME: STOWE
PROJECT NUMBER: BRF 0235(15)

FILE NAME: z88c190qty.dgn
PROJECT LEADER: J. BYATT
DESIGNED BY: K. RUTTER
QUANTITY SHEET 2

PLOT DATE: 3/9/2015
DRAWN BY: K. RUTTER
CHECKED BY: C. GREGORY
SHEET 8 OF 79

STATE OF VERMONT
AGENCY OF TRANSPORTATION

QUANTITY SHEET 3

SUMMARY OF ESTIMATED QUANTITIES							TOTALS		DESCRIPTIONS			
ROADWAY	ROADWAY (NO FEDERAL/STATE	LANDSCAPING	EROSION CONTROL	BRIDGE	FULL C.E. ITEMS		GRAND TOTAL	FINAL	UNIT	ITEMS	ITEM NUMBER	ROUND
2250							2250		LF	TEMPORARY 4 INCH WHITE LINE, PAINT	646.602	1
2200							2200		LF	TEMPORARY 4 INCH YELLOW LINE, PAINT	646.612	-
15							15		LF	TEMPORARY 24 INCH STOP BAR, PAINT	646.682	4
4							4		EACH	TEMPORARY LETTER OR SYMBOL, PAINT	646.692	-
			230	710			940		SY	GEOTEXTILE UNDER STONE FILL	649.31	5.6
			560				560		SY	GEOTEXTILE FOR SILT FENCE	649.51	3
			300				300		SY	GEOTEXTILE FOR SILT FENCE, WOVEN WIRE REINFORCED	649.515	1
			180				180		SY	GEOTEXTILE FOR FILTER CURTAIN	649.61	6
			110				110		LB	SEED	651.15	1
			380				380		LB	FERTILIZER	651.18	3
			1.5				1.5		TON	AGRICULTURAL LIMESTONE	651.20	0.1
			1.5				1.5		TON	HAY MULCH	651.25	0.1
370							370		CY	TOPSOIL	651.35	8
			155	86			241		SY	GRUBBING MATERIAL	651.40	3
			1				1		LS	EPSC PLAN	652.10	-
			180				180		HR	MONITORING EPSC PLAN	652.20	1
			4500				4500		LU	MAINTENANCE OF EPSC PLAN (N.A.B.I.)	652.30	25
			230				230		SY	TEMPORARY EROSION MATTING	653.20	5
			600				600		SY	PERMANENT EROSION MATTING	653.21	32
			450				450		LF	BARRIER FENCE	653.50	15
			1625				1625		LF	PROJECT DEMARCATION FENCE	653.55	9
		3					3		EACH	EVERGREEN TREES (PICEA OMORIKA) (B&B) (7' - 8' HEIGHT)	656.20	-
		18					18		EACH	EVERGREEN TREES (PICES GLAUCA) (B&B) (7' - 8' HEIGHT)	656.20	-
		20					20		EACH	DECIDUOUS SHRUBS (CORNUS SERICEA ARCTIC FIRE) (CONT.) (2 GALLON)	656.35	-
		20					20		MGAL	LANDSCAPE WATERING	656.65	4
		225					225		CY	LANDSCAPE BACKFILL, TRUCK MEASUREMENT	656.80	6
		1					1		LS	TREE PROTECTION	656.85	-
33							33		SF	TRAFFIC SIGNS, TYPE A	675.20	0.74
106	30						136		LF	SQUARE TUBE SIGN POST AND ANCHOR	675.341	-
10							10		EACH	REMOVING SIGNS	675.50	-
	1						1		EACH	ERECTING SALVAGED SIGNS	675.60	-
1							1		LU	PRICE ADJUSTMENT, FUEL (N.A.B.I.)	690.50	-
13							13		EACH	SPECIAL PROVISION (CPM SCHEDULE)	900.620	-
1							1		LU	SPECIAL PROVISION (MAT DENSITY PAY ADJUSTMENT, SMALL QUANTITY) (N.A.B.I.)	900.650	-
1							1		LU	SPECIAL PROVISION (MIXTURE PAY ADJUSTMENT) (N.A.B.I.)	900.650	-
				371			371		SF	SPECIAL PROVISION (RETAINING WALL)	900.670	-
25							25		SY	SPECIAL PROVISION (HAND-PLACED BITUMINOUS CONCRETE MATERIAL, DRIVES)	900.675	3
1450							1450		TON	SPECIAL PROVISION (BITUMINOUS CONCRETE PAVEMENT, SMALL QUANTITY)	900.680	49

DETAILED SUMMARY OF QUANTITIES

QUANTITIES	UNIT	ITEMS
		SPECIAL PROVISION (BITUMINOUS CONCRETE PAVEMENT, SMALL QUANTITY)
792	TON	TYPE IIS (VT108)
67	TON	TYPE IIIS (MEADOW LANE)
542	TON	TYPE IVS (VT108)
1401	TON	SUBTOTAL
49	TON	ROUNDING
1450	TON	TOTAL

CONSULTING ENGINEERS

PROJECT NAME: STOWE
PROJECT NUMBER: BRF 0235(15)

FILE NAME: z88c190qty.dgn
PROJECT LEADER: J. BYATT
DESIGNED BY: K. RUTTER
QUANTITY SHEET 3

PLOT DATE: 3/9/2015
DRAWN BY: K. RUTTER
CHECKED BY: C. GREGORY
SHEET 9 OF 79

CLD 12-0120 MODEL: QS#3

STATE OF VERMONT
AGENCY OF TRANSPORTATION

BRIDGE QUANTITY SHEET 1

SUMMARY OF BRIDGE QUANTITIES								TOTALS	DESCRIPTIONS			DETAILED SUMMARY OF QUANTITIES		
TEMPORARY BRIDGE	PIER	APPROACH SLAB 1	APPROACH SLAB 2	ABUTMENT NO. 1	ABUTMENT NO. 2	SUPER-STRUCTURE	BRIDGE TOTAL		UNIT	ITEMS	ITEM NUMBER	QUANTITIES	UNIT	ITEMS
				280	265		545		CY	UNCLASSIFIED CHANNEL EXCAVATION	203.27			
				215	215		430		CY	STRUCTURE EXCAVATION	204.25			
				175	165		340		CY	GRANULAR BACKFILL FOR STRUCTURES	204.30			
		26	28	42	42	143	281		CY	CONCRETE, HIGH PERFORMANCE CLASS A	501.33			
				42	30		72		CY	CONCRETE, HIGH PERFORMANCE CLASS B	501.34			
				0.5	0.5		1		LS	FURNISHING EQUIPMENT FOR DRIVING PILING	504.10			
				384	222		606		LF	STEEL PILING, HP 12 X 63	505.155			
				2227			2227		SF	PERMANENT STEEL SHEET PILING (Z MIN.= 48.9 IN^3)	505.35			
				1	1		2		EACH	DYNAMIC PILE LOADING TEST	505.45			
						301070	301070		LB	STRUCTURAL STEEL, CURVED PLATE GIRDER	506.56			
		3070	3292	2860	2390		11612		LB	REINFORCING STEEL, LEVEL I	507.11			
				7616	7512	32584	47712		LB	REINFORCING STEEL, LEVEL II	507.12			
						1	1		LS	SHEAR CONNECTORS (1180 - 7" x 7/8")	508.15			
						550	550		SY	LONGITUDINAL DECK GROOVING	509.10			
				4	4	33	41		GAL	WATER REPELLENT, SILANE	514.10			
		31	32				63		LF	BRIDGE EXPANSION JOINT, ASPHALTIC PLUG	516.10			
						299.75	299.75		LF	BRIDGE RAILING, GALVANIZED 3 RAIL BOX BEAM	525.335			
1							1		LS	TWO-WAY TEMPORARY BRIDGE (3840 SF - EST.)	528.11			
						1	1		EACH	REMOVAL OF STRUCTURE (5747 SF - EST.)	529.15			
	105			280	265		650		CY	STONE FILL, TYPE IV	613.13			
						4	4		EACH	GUARDRAIL APPROACH SECTION, GALVANIZED 3 RAIL BOX BEAM	621.725			
	135			310	265		710		SY	GEOTEXTILE UNDER STONE FILL	649.31			
				45	41		86		SY	GRUBBING MATERIAL	651.40			
				202	169		371		SF	SPECIAL PROVISION (RETAINING WALL)	900.670			

CLD 12-0120 MODEL: OS BRIDGE

CONSULTING ENGINEERS

PROJECT NAME: STOWE
PROJECT NUMBER: BRF 0235(15)

FILE NAME: z88c190qty.dgn
PROJECT LEADER: J. BYATT
DESIGNED BY: J. FRENCH
BRIDGE QUANTITY SHEET 1

PLOT DATE: 3/9/2015
DRAWN BY: J. FRENCH
CHECKED BY: J. BYATT
SHEET 10 OF 79

GENERAL

1. ALL MATERIAL AND CONSTRUCTION SHALL CONFORM TO THE STATE OF VERMONT AGENCY OF TRANSPORTATION STANDARD SPECIFICATIONS FOR CONSTRUCTION DATED 2011, AND ITS LATEST REVISIONS, AND THE AASHTO LRFD BRIDGE DESIGN SPECIFICATIONS, DATED 2012, AND ITS LATEST REVISIONS.

2. THE BRIDGE WAS DESIGNED FOR THE HL-93 LIVE LOAD WITH 2½" FUTURE PAVEMENT.

3. ALL DIMENSIONS SHOWN IN THE PLANS ARE HORIZONTAL AND VERTICAL AND ARE GIVEN AT 68 DEGREES FAHRENHEIT, UNLESS NOTED OTHERWISE.

4. THE CONTRACTOR SHALL BE MADE AWARE THAT EXISTING UTILITIES ARE WITHIN THE CONSTRUCTION LIMITS OF BRIDGE 3. THE LOCATION OF ANY UTILITY INFORMATION SHOWN ON THE PLANS IS APPROXIMATE. NO CLAIMS ARE MADE AS TO THE ACCURACY OR COMPLETENESS OF THE UTILITIES SHOWN. THE CONTRACTOR IS SOLELY RESPONSIBLE FOR LOCATING AND PROTECTING FROM DAMAGE ALL UTILITIES ON SITE DURING ALL STAGES OF CONSTRUCTION. SEE UTILITY PLANS AND SPECIAL PROVISIONS FOR ADDITIONAL INFORMATION AND REQUIREMENTS.

5. THE REMOVAL OF THE EXISTING WATER LINE ON THE BRIDGE SHALL BE INCIDENTAL TO ITEM 529.15 - REMOVAL OF STRUCTURE.

6. ALL PG BINDER USED IN BITUMINOUS CONCRETE PAVEMENT SHALL BE IN ACCORDANCE WITH SUBSECTION 490.03b.

7. EMULSIFIED ASPHALT SHALL BE APPLIED ON ALL COLD PLANED SURFACES AT THE RATE OF 0.040 GAL/SY AND BETWEEN ALL COURSES OF PAVEMENT AT THE RATE OF 0.025 GAL/SY OR AS DIRECTED BY THE ENGINEER.

8. ANY REQUIRED SAWCUT OF EXISTING PAVEMENT SHALL BE INCIDENTAL TO THE WEARING COURSE PAY ITEM.

9. THE CONTRACTOR SHALL REVIEW AND UNDERSTAND ALL APPLICABLE ENVIRONMENTAL PERMITS AND ENSURE THAT ALL CONSTRUCTION CONDITIONS ARE MET.

10. THE CONTRACTOR SHALL BE RESPONSIBLE FOR REPAIRING ANY DAMAGE TO PRIVATE OR PUBLIC PROPERTY CAUSED BY THE CONTRACTOR AT THE CONTRACTOR'S EXPENSE AND TO THE SATISFACTION OF THE ENGINEER.

11. UPON COMPLETION OF THE BRIDGE CONSTRUCTION THE CONTRACTOR SHALL REMOVE THE DETOUR, RESTORE THE DETOUR SITE TO THE ORIGINAL GRADE AND STABILIZE AS SHOWN ON THE EPSC FINAL CONDITIONS PLAN.

12. SLOPE ROUNDING: ALL CUT SLOPES TO BE ROUNDED IN ACCORDANCE WITH STANDARD SHEET B-5.

13. WINTER WORK IS ANTICIPATED FOR THIS PROJECT. SUBSECTION 108.09(D) IS WAIVED. SEE SPECIAL PROVISIONS.

14. SHEET 79 IS INCLUDED FOR REFERENCE ONLY. ALL WORK SHOWN ON SHEET 79 WILL BE COMPLETED PRIOR TO CONSTRUCTION AND BY OTHERS.

EARTHWORK AND RELATED ITEMS

15. TEMPORARY CONSTRUCTION FILLS WITHIN THE WATERCOURSE FOR ANY PURPOSE SHALL CONSIST OF CLEAN STONE FILL ONLY. NO OTHER FILLING IN THE STREAM SHALL OCCUR WITHOUT THE APPROVAL OF THE STREAM ALTERATION ENGINEER.

16. THE "STONE FILL, TYPE IV" UNDER THE BRIDGE AS SHOWN IN THE PLANS SHALL BE PLACED BEFORE THE NEW STEEL GIRDERS ARE SET.

17. ITEM 529.15 "REMOVAL OF STRUCTURE" SHALL BE USED FOR THE REMOVAL OF THE EXISTING STRUCTURE INCLUDING THE SUPERSTRUCTURE, PIER, AND ABUTMENTS OUTSIDE THE LIMITS OF STRUCTURE EXCAVATION OR UNCLASSIFIED CHANNEL EXCAVATION. THE PIER SHALL BE REMOVED TO ELEVATION 722.0.

H-PILES

18. TO PREVENT DAMAGE TO THE PILES, PILE SHOES ARE REQUIRED AND SHALL CONFORM TO SUB-SECTION 505.04(f).

19. PILES SHALL BE DRIVEN WITHIN 3 INCHES OF THE LOCATION SHOWN ON THE PLANS. THE PILE ORIENTATION SHALL NOT VARY MORE THAN 5 DEGREES. THE CONTRACTOR SHALL DEMONSTRATE HOW THE TOLERANCE WILL BE MET TO THE SATISFACTION OF THE RESIDENT ENGINEER.

20. TO ENSURE THAT THE NOMINAL CAPACITY HAS BEEN ATTAINED AND TO PREVENT THE OVERSTRESSING OF THE PILES DURING DRIVING OPERATIONS, DYNAMIC TESTING SHALL BE PERFORMED IN ACCORDANCE WITH SUBSECTION 504.04. A MINIMUM OF ONE DYNAMIC PILE TEST SHALL BE CONDUCTED ON THE FIRST PILE DRIVEN FOR EACH SUBSTRUCTURE UNIT, FOR A TOTAL OF 2 TESTS. MORE TESTS MAY BE REQUIRED BY THE ENGINEER. ADDITIONAL TEST REQUIRED BY THE ENGINEER WILL BE PAID FOR AT THE UNIT PRICE BID FOR CONTRACT ITEM 505.45.

21. THE PILES SHALL BE DRIVEN TO A NOMINAL PILE DRIVING RESISTANCE (RNDR) OF 400 KIPS, AS DETERMINED BY THE RESULTS OF DYNAMIC TESTING, AND AS INTERPRETED BY THE RESIDENT ENGINEER. HOWEVER, THE PILES SHALL BE DRIVEN TO A MINIMUM DEPTH OF 30 FEET BELOW THE BOTTOM OF THE PILE CAP.

22. FOR ESTIMATING PURPOSES, THE PILE TIP ELEVATIONS WERE ASSUMED TO BE AS SHOWN ON THE BORING LOGS. THE ACTUAL IN PLACE LENGTH MAY VARY.

STEEL

23. THE EXISTING STRUCTURAL STEEL IS PAINTED WITH MATERIAL THAT MAY CONTAIN LEAD. THE CONTRACTOR SHALL FOLLOW ALL APPLICABLE REGULATIONS WHEN HANDLING AND WORKING WITH THIS STEEL. THE REMOVED STRUCTURAL STEEL IS THE PROPERTY OF THE CONTRACTOR. THE CONTRACTOR SHALL INDEMNIFY AND HOLD THE STATE, ITS OFFICERS, AND EMPLOYEES HARMLESS CONCERNING THE CONTRACTOR'S USE OR DISPOSITION OF THE REMOVED EXISTING STRUCTURAL STEEL.

24. TEMPORARY LATERAL SUPPORTS SHALL BE PROVIDED ON THE FASCIA GIRDERS AT THE ACUTE CORNERS. IF THE PROPOSED SUPPORTS ARE TO BE PERMANENT THEY SHALL BE INCLUDED IN THE FABRICATION DRAWINGS. PERMANENT SUPPORTS SHALL BE INCIDENTAL TO CONTRACT ITEM 506.56.

CONCRETE

25. CONCRETE USED FOR DECK, APPROACH SLABS, END DIAPHRAGMS, AND SHEET PILE RETAINING WALL CAP SHALL BE HIGH PERFORMANCE CONCRETE CLASS A AND WILL BE PAID UNDER CONTRACT ITEM 501.33. CONCRETE USED FOR PILE CAP SHALL BE HIGH PERFORMANCE CONCRETE CLASS B. AND WILL BE PAID UNDER CONTRACT ITEM 501.34

26. WATER REPELLENT, SILANE, SHALL BE APPLIED TO ALL EXPOSED CONCRETE SURFACES, EXCEPT THE UNDERSIDE OF THE DECK BETWEEN DRIP NOTCHES.

27. ALL REINFORCING STEEL IN THE DECK AND END DIAPHRAGMS SHALL BE LEVEL II - STAINLESS CLAD OR DUAL COATED REINFORCING STEEL. REINFORCEMENT IN THE PILE CAP, APPROACH SLABS, AND SHEET PILE WALL CAP SHALL BE LEVEL I.

28. ALL REINFORCING STEEL SHALL BE DETAILED AND FABRICATED USING PROCEDURES AND TOLERANCES IN ACCORDANCE WITH APPLICABLE PUBLICATIONS OF THE "CONCRETE REINFORCING INSTITUTE".

29. MINIMUM CLEAR COVER FOR REINFORCING STEEL SHALL BE AS FOLLOWS:

ALONG BACKFACES OF WALLS AGAINST EARTH:	2.5 INCH
ALONG TOP SURFACE OF DECK SLAB:	3.0 INCH
ALONG BOTTOM SURFACE OF DECK SLAB:	1.5 INCH
ELSEWHERE UNLESS OTHERWISE INDICATED:	3.0 INCH

30. POUR THE MIDDLE SECTION OF THE CONCRETE DECK FIRST AND THEN THE END DIAPHRAGMS.

GENERAL INFORMATION

SYMBOLOGY LEGEND NOTE

THE SYMBOLOGY ON THIS SHEET IS INTENDED TO COVER STANDARD CONVENTIONAL SYMBOLOGY. THE SYMBOLOGY IS USED FOR EXISTING & PROPOSED FEATURES WITH HEAVIER LINEWEIGHT, IN COMBINATION WITH PROJECT ANNOTATION, AS NOTED ON PROJECT PLAN SHEETS. THIS LEGEND SHEET COVERS THE BASICS. SYMBOLOGY ON PLANS MAY VARY, PLAN ANNOTATIONS AND NOTES SHOULD BE USED TO CLARIFY AS NEEDED.

SIGNS

N	NEW SIGN
RET	RETAIN SIGN
S	SALVAGE SIGN
R	REMOVE SIGN
R&S	REMOVE AND SALVAGE

PAVEMENT MARKINGS

YL	YELLOW LINE
WL	WHITE LINE

R.O.W. ABBREVIATIONS (CODES) & SYMBOLS

POINT	CODE	DESCRIPTION
	CH	CHANNEL EASEMENT
	CONST	CONSTRUCTION EASEMENT
	CUL	CULVERT EASEMENT
	D&C	DISCONNECT & CONNECT
	DIT	DITCH EASEMENT
	DR	DRAINAGE EASEMENT
	DRIVE	DRIVEWAY EASEMENT
	EC	EROSION CONTROL
	HWY	HIGHWAY EASEMENT
	I&M	INSTALL & MAINTAIN EASEMENT
	LAND	LANDSCAPE EASEMENT
	R&RES	REMOVE & RESET
	R&REP	REMOVE & REPLACE
	SR	SLOPE RIGHT
	UE	UTILITY EASEMENT
	(P)	PERMANENT EASEMENT
	(T)	TEMPORARY EASEMENT
■	BNDNS	BOUND SET
⊡	BNDNS	BOUND TO BE SET
●	IPNS	IRON PIN SET
◎	IPNS	IRON PIN TO BE SET
⊠	CALC	EXISTING ROW POINT
○	PROW	PROPOSED ROW POINT
[LENGTH]		LENGTH CARRIED ON NEXT SHEET

COMMON TOPOGRAPHIC POINT SYMBOLS

POINT	CODE	DESCRIPTION
	APL	BOUND APPARENT LOCATION
	BM	BENCHMARK
	BND	BOUND
	CB	CATCH BASIN
	COMB	COMBINATION POLE
	DITHR	DROP INLET THROATED DNC
	EL	ELECTRIC POWER POLE
	FPOLE	FLAGPOLE
	GASFIL	GAS FILLER
	GP	GUIDE POST
	GSO	GAS SHUT OFF
	GUY	GUY POLE
	GUYW	GUY WIRE
	GV	GATE VALUE
	H	TREE HARDWOOD
	HCTRL	CONTROL HORIZONTAL
	HVCTRL	CONTROL HORIZ. & VERTICAL
	HYD	HYDRANT
	IP	IRON PIN
	IPIPE	IRON PIPE
	LI	LIGHT - STREET OR YARD
	MB	MAILBOX
	MH	MANHOLE (MH)
	MM	MILE MARKER
	PM	PARKING METER
	PMK	PROJECT MARKER
	POST	POST STONE/WOOD
	RRSIG	RAILROAD SIGNAL
	RRSL	RAILROAD SWITCH LEVER
	S	TREE SOFTWOOD
	SAT	SATELLITE DISH
	SHRUB	SHRUB
	SIGN	SIGN
	STUMP	STUMP
	TEL	TELEPHONE POLE
	TIE	TIE
	TSIGN	SIGN W/DOUBLE POST
	VCTRL	CONTROL VERTICAL
	WELL	WELL
	WSO	WATER SHUT OFF

THESE ARE COMMON VAOT SURVEY POINT SYMBOLS FOR EXISTING FEATURES, ALSO USED FOR PROPOSED FEATURES WITH HEAVIER LINEWEIGHT, IN COMBINATION WITH PROPOSED ANNOTATION.

PROPOSED GEOMETRY CODES

CODE	DESCRIPTION
PC	POINT OF CURVATURE
PI	POINT OF INTERSECTION
CC	CENTER OF CURVE
PT	POINT OF TANGENCY
PCC	POINT OF COMPOUND CURVE
PRC	POINT OF REVERSE CURVE
POB	POINT OF BEGINNING
POE	POINT OF ENDING
STA	STATION PREFIX
AH	AHEAD STATION SUFFIX
BK	BACK STATION SUFFIX
D	CURVE DEGREE OF (100FT)
R	CURVE RADIUS OF
T	CURVE TANGENT LENGTH
L	CURVE LENGTH OF
E	CURVE EXTERNAL DISTANCE

UTILITY SYMBOLOGY

UNDERGROUND UTILITIES

	UTILITY (GENERIC-UNKNOWN)
UT	TELEPHONE
UE	ELECTRIC
UC	CABLE (TV)
UEC	ELECTRIC+CABLE
UET	ELECTRIC+TELEPHONE
UCT	CABLE+TELEPHONE
UECT	ELECTRIC+CABLE+TELEP.
G	GAS LINE
W	WATER LINE
S	SANITARY SEWER (SEPTIC)

ABOVE GROUND UTILITIES (AERIAL)

	UTILITY (GENERIC-UNKNOWN)
T	TELEPHONE
E	ELECTRIC
C	CABLE (TV)
EC	ELECTRIC+CABLE
ET	ELECTRIC+TELEPHONE
AER E&T	ELECTRIC+TELEPHONE
CT	CABLE+TELEPHONE
ECT	ELECTRIC+CABLE+TELEP.
	UTILITY POLE GUY WIRE

PROJECT CONSTRUCTION SYMBOLOGY

PROJECT DESIGN & LAYOUT SYMBOLOGY

CZ	CLEAR ZONE
	PLAN LAYOUT MATCHLINE

PROJECT CONSTRUCTION FEATURES

	TOP OF CUT SLOPE
	TOE OF FILL SLOPE
	STONE FILL
	BOTTOM OF DITCH ℄
	CULVERT PROPOSED
	STRUCTURE SUBSURFACE
PDF	PROJECT DEMARCATION FENCE
BF	BARRIER FENCE
	TREE PROTECTION ZONE (TPZ)
	STRIPING LINE REMOVAL
	SHEET PILES

CONVENTIONAL BOUNDARY SYMBOLOGY

BOUNDARY LINES

TOWN LINE	TOWN BOUNDARY LINE
COUNTY LINE	COUNTY BOUNDARY LINE
STATE LINE	STATE BOUNDARY LINE
	PROPOSED STATE R.O.W. (LIMITED ACCESS)
	PROPOSED STATE R.O.W.
	STATE ROW (LIMITED ACCESS)
	STATE ROW
	TOWN ROW
	PERMANENT EASEMENT LINE (P)
	TEMPORARY EASEMENT LINE (T)
	SURVEY LINE
P/L	PROPERTY LINE (P/L)
SR	SLOPE RIGHTS
6f	6F PROPERTY BOUNDARY
4f	4F PROPERTY BOUNDARY
HAZ	HAZARDOUS WASTE

EPSC LAYOUT PLAN SYMBOLOGY

EPSC MEASURES

	FILTER CURTAIN
	SILT FENCE
	SILT FENCE WOVEN WIRE
	CHECK DAM
	DISTURBED AREAS REQUIRING RE-VEGETATION
	EROSION MATTING

ENVIRONMENTAL RESOURCES

	WETLAND BOUNDARY
	RIPARIAN BUFFER ZONE
	WETLAND BUFFER ZONE
	SOIL TYPE BOUNDARY
T&E	THREATENED & ENDANGERED SPECIES
HAZ	HAZARDOUS WASTE AREA
AG	AGRICULTURAL LAND
HABITAT	FISH & WILDLIFE HABITAT
FLOOD PLAIN	FLOOD PLAIN
OHW	ORDINARY HIGH WATER (OHW)
	STORM WATER
	USDA FOREST SERVICE LANDS
	WILDLIFE HABITAT SUIT/CONN

ARCHEOLOGICAL & HISTORIC

ARCH	ARCHEOLOGICAL BOUNDARY
HISTORIC DIST	HISTORIC DISTRICT BOUNDARY
HISTORIC	HISTORIC AREA
H	HISTORIC STRUCTURE

CONVENTIONAL TOPOGRAPHIC SYMBOLOGY

EXISTING FEATURES

	ROAD EDGE PAVEMENT
	ROAD EDGE GRAVEL
	DRIVEWAY EDGE
	DITCH
	FOUNDATION
	FENCE (EXISTING)
	FENCE WOOD POST
	FENCE STEEL POST
	GARDEN
	ROAD GUARDRAIL
	RAILROAD TRACKS
	CULVERT (EXISTING)
	STONE WALL
	WALL
	WOOD LINE
	BRUSH LINE
	HEDGE
	BODY OF WATER EDGE
	LEDGE EXPOSED

PROJECT NAME:	STOWE
PROJECT NUMBER:	BRF 0235(15)

FILE NAME: z88c190legend.dgn	PLOT DATE: 3/9/2015
PROJECT LEADER: J. BYATT	DRAWN BY: K. RUTTER
DESIGNED BY: K. RUTTER	CHECKED BY: C. GREGORY
CONVENTIONAL SYMBOLOGY LEGEND SHEET	SHEET 12 OF 79

CONSULTING ENGINEERS

CLD 12-0120 MODEL: LEGEND

GPS CONTROL POINTS

HVCTRL #1

COTTAGE

NORTH = 720366.318
EAST = 1583870.117
ELEV. = 766.304

DESCRIBED BY VERMONT AGENCY OF TRANSPORTATION 1996 (DJM)
GENERAL LOCATION - THE STATION IS LOCATED IN THE TOWN OF STOWE, 1.6 MI (2.6 KM) NORTHWEST OF STOWE VILLAGE, 8.2 MI (13.2 KM) SOUTHWEST OF MORRISVILLE, AND 9.9 MI (15.9 KM) NORTH NORTHEAST OF WATERBURY. TO REACH FROM THE JUNCTION OF VERMONT ROUTE 100 AND VERMONT ROUTE 108 IN STOWE VILLAGE, PROCEED NORTHERLY ALONG ROUTE 108 FOR 2.0 MI (3.2 KM) TO COTTAGE CLUB ROAD (TH 29) ON THE RIGHT. PROCEED NORTHEASTERLY ALONG COTTAGE CLUB ROAD FOR 0.1 MI (0.2 KM) TO THE MARK ON THE RIGHT. THE MARK IS A STATE OF VERMONT SURVEY DISK SET IN THE TOP OF A CONCRETE MONUMENT 30 CM IN DIAMETER, FLUSH WITH THE GROUND SURFACE. IT IS LOCATED 128 FT (39.0 M) NORTHEAST OF UTILITY POLE 1, 88.5 FT (27.0 M) SOUTHWEST OF UTILITY POLE 3, 36 FT (11.0 M) SOUTHEAST OF A CHAINLINK FENCE, 18.5 FT (5.6 M) SOUTHEAST OF THE CENTERLINE OF COTTAGE CLUB ROAD (TH 29), AND 3 FT (0.9 M) NORTHWEST OF A FIBERGLASS WITNESS POST. OWNERSHIP IS THE TOWN OF STOWE.

HVCTRL #2

VILLAGE GREEN

NORTH = 720026.656
EAST = 1585800.072
ELEV. = 750.852

DESCRIBED BY VERMONT AGENCY OF TRANSPORTATION 1996 (DJM)
GENERAL LOCATION - THE STATION IS LOCATED IN THE TOWN OF STOWE, 1.2 MI (1.9 KM) NORTHWEST OF STOWE VILLAGE, 8.1 MI (13.0 KM) SOUTHWEST OF MORRISVILLE, AND 9.8 MI (15.8 KM) NORTH NORTHEAST OF WATERBURY. TO REACH FROM THE JUNCTION OF VERMONT ROUTE 100 AND VERMONT ROUTE 108 IN STOWE VILLAGE, PROCEED NORTHERLY ALONG ROUTE 108 FOR 1.7 MI (2.7 KM) TO CAPE COD ROAD (TH 31) ON THE RIGHT. TURN RIGHT AND GO NORTHEAST ALONG CAPE COD ROAD FOR 0.15 MI (0.24 KM) TO THE MARK ON THE RIGHT. THE MARK IS A STATE OF VERMONT SURVEY DISK SET IN THE TOP OF A CONCRETE MONUMENT 30 CM IN DIAMETER FLUSH WITH THE GROUND SURFACE. IT IS LOCATED 176.5 FT (53.8 M) SOUTHWEST OF THE CENTERLINE OF A PAVED DRIVE TO VILLAGE GREEN CONDOMINIUMS, 66.5 FT (20.3 M) NORTHEAST OF UTILITY POLE 3, 31.5 FT (9.6 M) NORTH OF A HIGHWAY SIGN (SPEED LIMIT 35), 14.5 FT (4.4 M) SOUTHEAST OF THE CENTERLINE OF CAPE COD ROAD (TH 31), AND 1 FT (0.3 M) WEST OF A FIBERGLASS WITNESS POST. OWNERSHIP IS THE STATE OF VERMONT.

TRAVERSE TIES

HVCTRL #3

NORTH = 718966.310
EAST = 1586568.514
ELEV. = 745.795

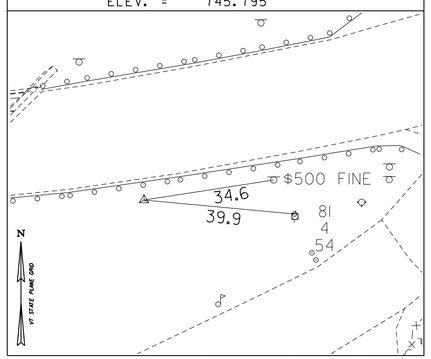

HVCTRL #4

NORTH = 719244.738
EAST = 1587011.060
ELEV. = 734.881

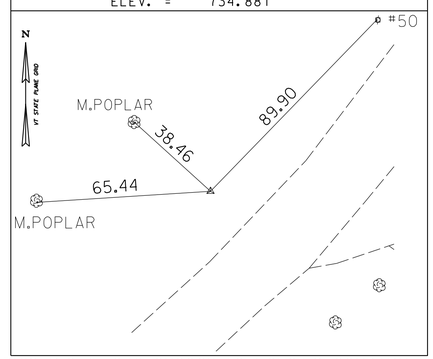

HVCTRL #5

NORTH = 719726.269
EAST = 1587327.249
ELEV. = 735.122

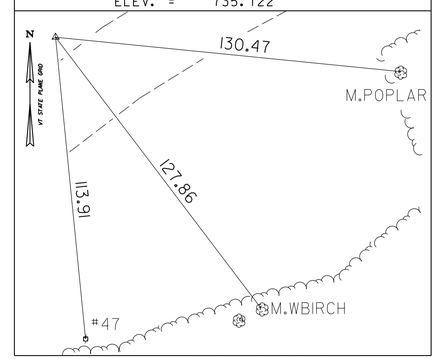

HVCTRL #10

NORTH = 719070.220
EAST = 1586004.621
ELEV. = 743.799

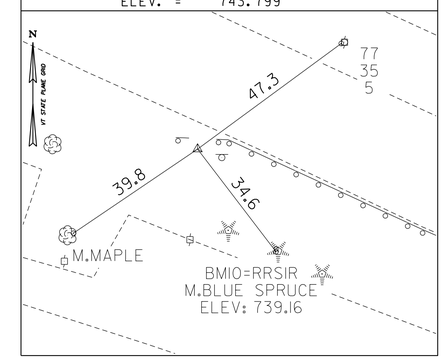

HVCTRL #11

NORTH = 719380.602
EAST = 1585477.025
ELEV. = 753.092

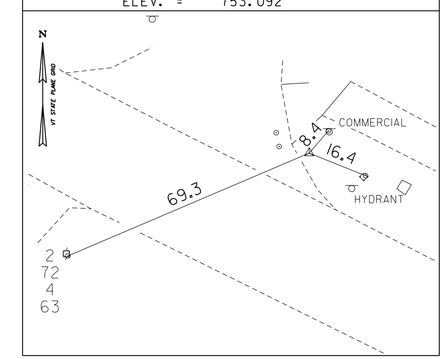

* MAIN TRAVERSE COMPLETED FEB. 8 2000 BY L.ORVIS P.C. & G.HITCHCOCK [93b059] SECONDARY TRAVERSE COMPLETED 7/20/2011 BY L.ORVIS

ALIGNMENT TIES

POB STA 10+00.00

NORTH = 719142.105
EAST = 1585899.792

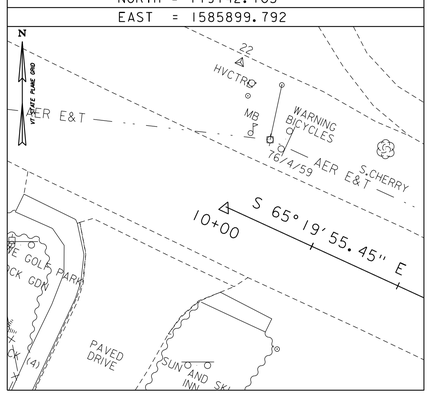

PC STA 12+24.49

NORTH = 719048.411
EAST = 1586103.799

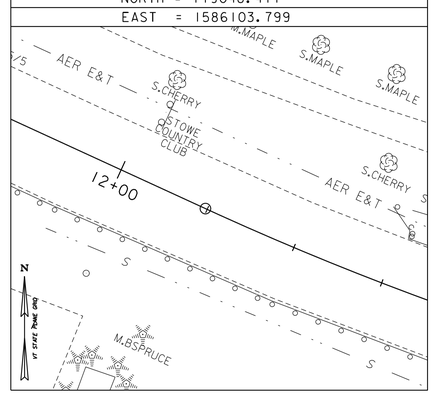

PCC STA 19+03.41

NORTH = 719044.316
EAST = 1586762.719

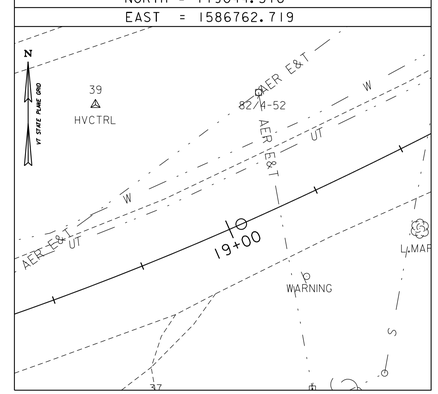

PT STA 22+12.98

NORTH = 719210.509
EAST = 1587022.297

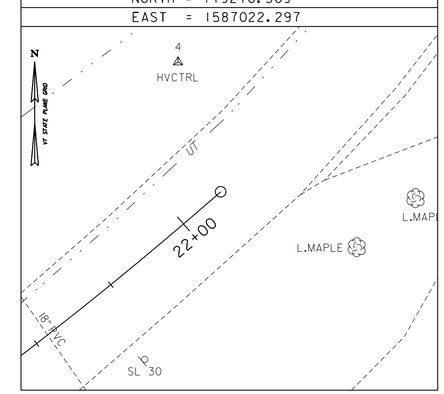

DATUM	
VERTICAL	NAVD 88
HORIZONTAL	NAD 83(96)
ADJUSTMENT	COMPASS

PROJECT NAME: STOWE
PROJECT NUMBER: BRF 0235(15)

FILE NAME: z88c190ti.dgn
PROJECT LEADER: J. BYATT
DESIGNED BY: K. RUTTER
TIE SHEET 1

PLOT DATE: 3/9/2015
DRAWN BY: K. RUTTER
CHECKED BY: C. GREGORY
SHEET 13 OF 79

CONSULTING ENGINEERS

MODEL: TIE01
CLD 12-0120

ALIGNMENT TIES

POB STA 40+00.00
NORTH = 718838.694
EAST = 1586428.223

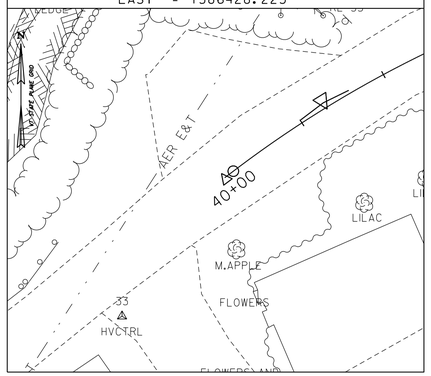

PC STA 40+02.85
NORTH = 718840.421
EAST = 1586430.493

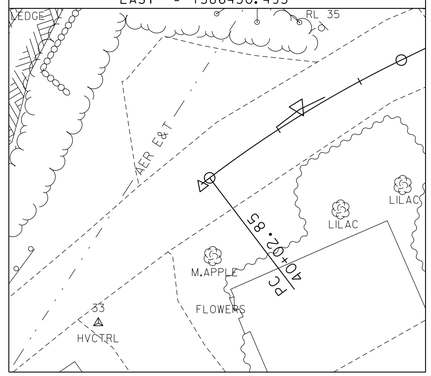

PT STA 40+62.34
NORTH = 718871.520
EAST = 1586481.088

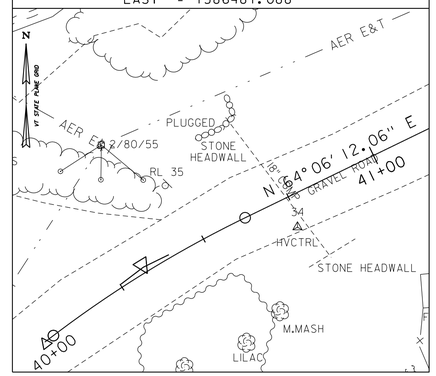

PC STA 41+90.51
NORTH = 718927.500
EAST = 1586596.393

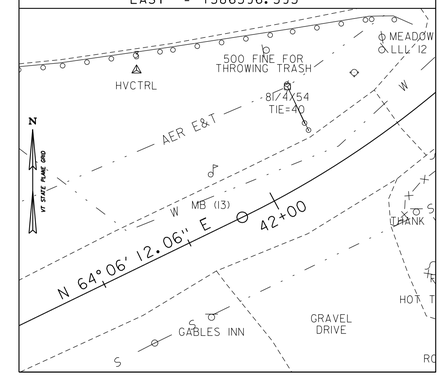

PT STA 42+50.07
NORTH = 718959.619
EAST = 1586646.381

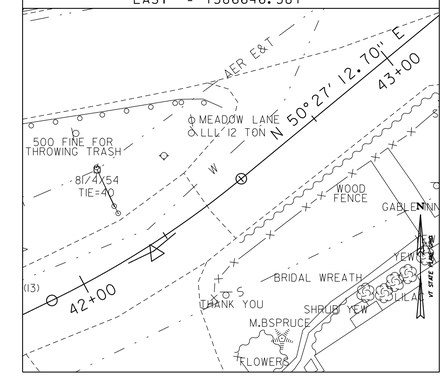

ALIGNMENT TIES

POB STA 100+00.00
NORTH = 719058.633
EAST = 1586081.541

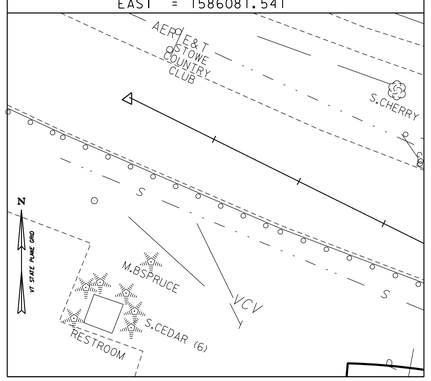

PC STA 102+18.00
NORTH = 718961.750
EAST = 1586276.827

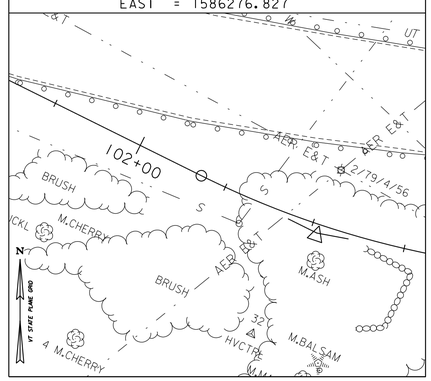

PT STA 102+85.62
NORTH = 718940.385
EAST = 1586340.757

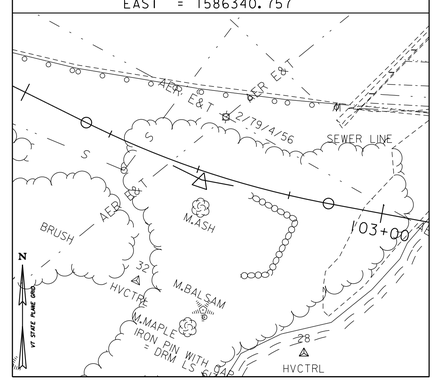

PC STA 104+04.17
NORTH = 718918.632
EAST = 1586457.298

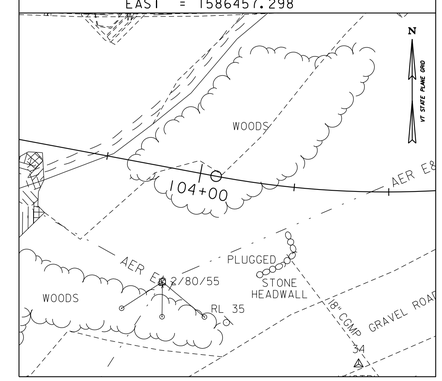

PT STA 106+16.60
NORTH = 718969.358
EAST = 1586656.787

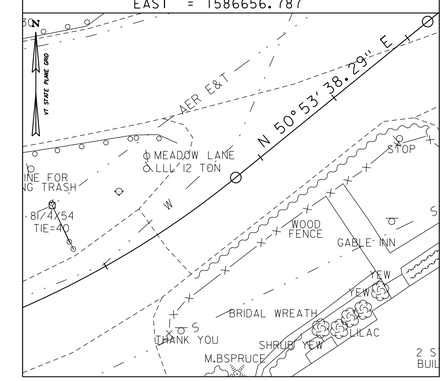

PC STA 106+81.87
NORTH = 719010.530
EAST = 1586707.438

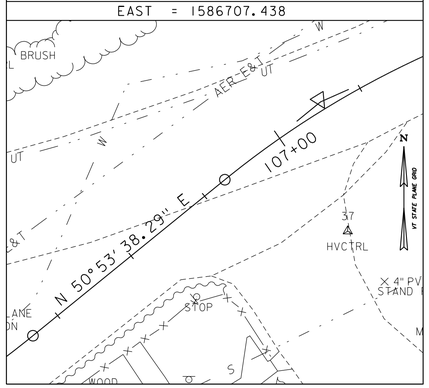

PRC STA 107+46.66
NORTH = 719044.311
EAST = 1586762.499

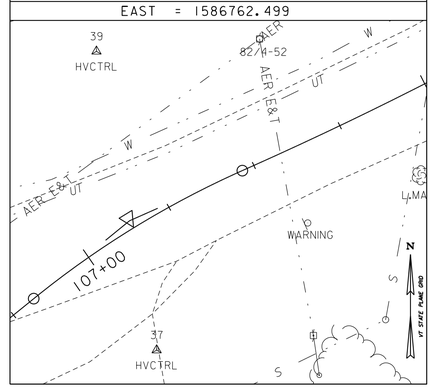

DATUM	
VERTICAL	NAVD 88
HORIZONTAL	NAD 83(96)
ADJUSTMENT	COMPASS

CONSULTING ENGINEERS

PROJECT NAME: STOWE	
PROJECT NUMBER: BRF 0235(15)	
FILE NAME: z88c190ti.dgn	PLOT DATE: 3/9/2015
PROJECT LEADER: J. BYATT	DRAWN BY: K. RUTTER
DESIGNED BY: K. RUTTER	CHECKED BY: C. GREGORY
TIE SHEET 2	SHEET 14 OF 79

BOX BEAM GUARDRAIL
STA 11+14.0 TO 14+59.6 RT
STA 12+81.3 TO 14+66.9 LT

MANUFACTURED TERMINAL SECTION, TANGENT
STA 11+00.1 TO 11+14.0 RT
STA 12+67.1 TO 12+81.3 LT

RELOCATE UTILITY POLE, BY OTHERS
STA 13+07 LT
STA 14+48 RT

STONE FILL, TYPE II
STA 12+00 TO 13+00 RT

GUARDRAIL APPROACH SECTION,
GALVANIZED 3 RAIL BOX BEAM
STA 14+59.6 TO 14+90.9 RT
STA 14+66.9 TO 15+02.5 LT

REMOVAL AND DISPOSAL OF GUARDRAIL
STA 11+19 TO 14+75 RT
STA 12+71 TO 14+75 LT

VT ROUTE 108
CURVE (1)
DELTA = 48°37'25" LT
D = 7°09'43"
R = 800.00'
T = 361.41'
L = 678.91'
E = 77.85'
BANKING = 0.048%

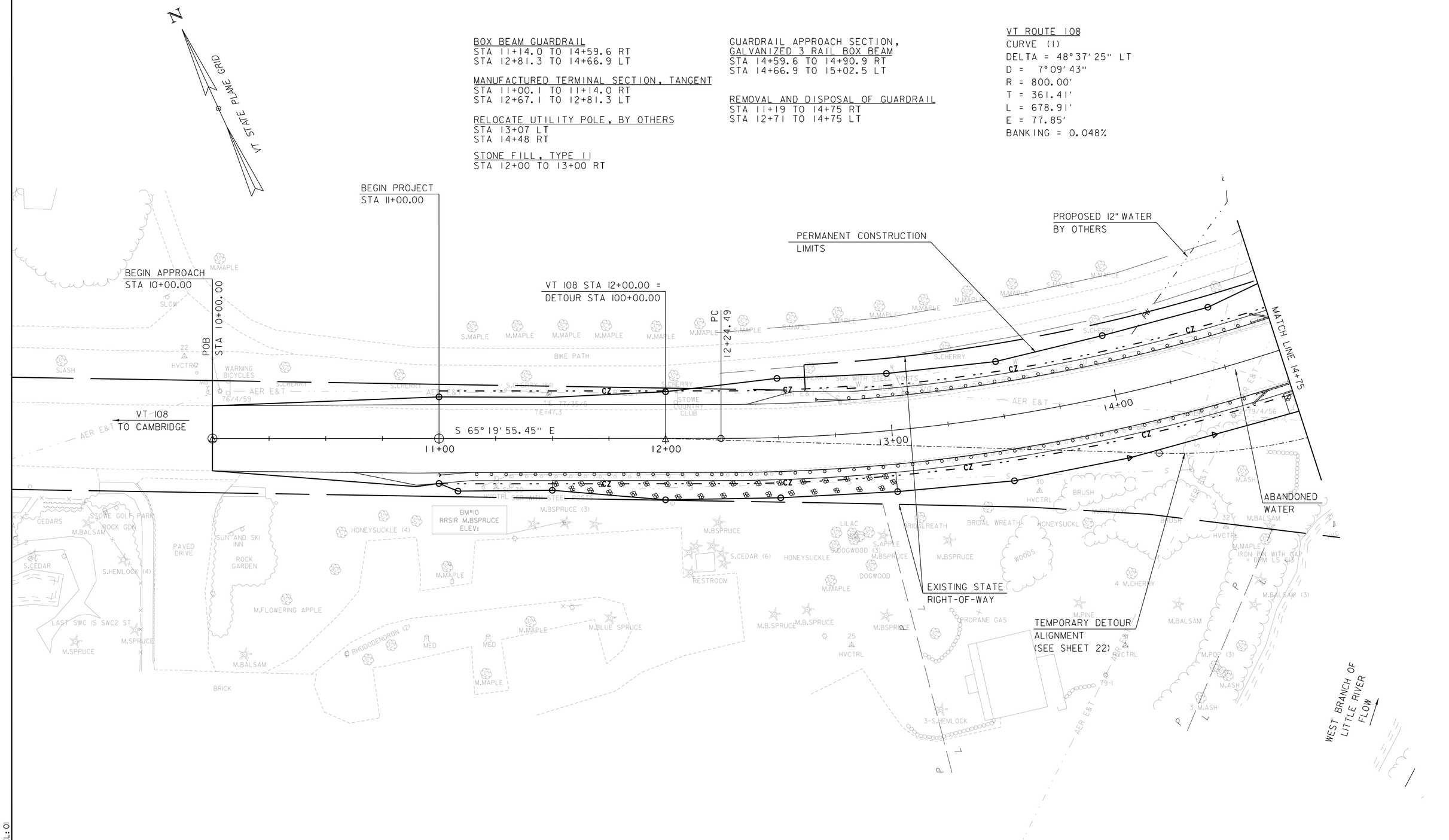

SCALE 1" = 20'-0"
20 0 20

PROJECT NAME: STOWE	
PROJECT NUMBER: BRF 0235(15)	
FILE NAME: z88c190bdr.dgn	PLOT DATE: 3/9/2015
PROJECT LEADER: J. BYATT	DRAWN BY: S. FORTIER
DESIGNED BY: K. RUTTER	CHECKED BY: C. GREGORY
LAYOUT SHEET 1	SHEET 15 OF 79

CLD 12-0120 MODEL: 01

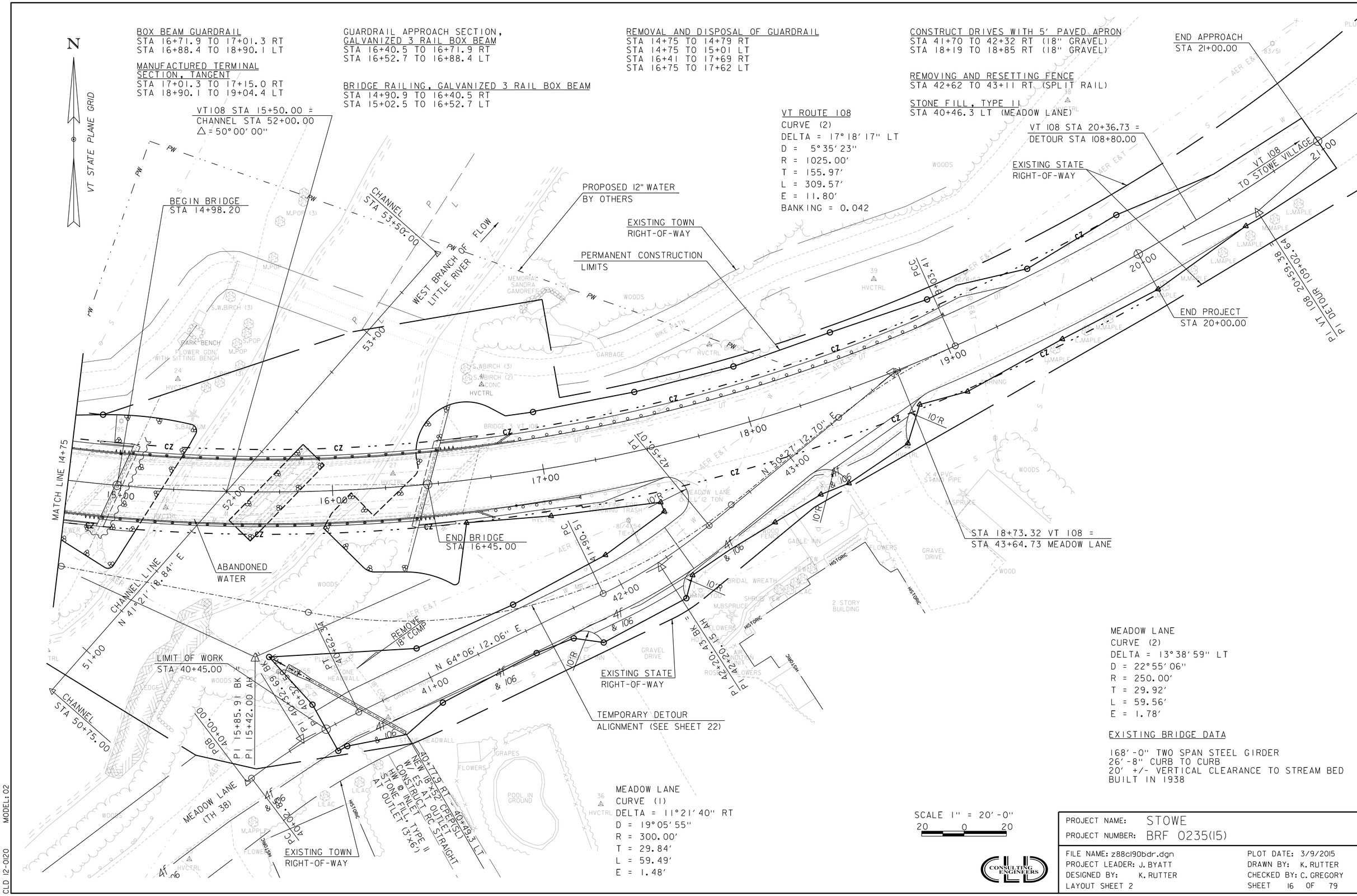

PROJECT NAME: STOWE	
PROJECT NUMBER: BRF 0235(15)	
FILE NAME: z88cl90bdr.dgn	PLOT DATE: 3/9/2015
PROJECT LEADER: J. BYATT	DRAWN BY: K. RUTTER
DESIGNED BY: K. RUTTER	CHECKED BY: C. GREGORY
LAYOUT SHEET 2	SHEET 16 OF 79

CLD 12-0120 MODEL: 02

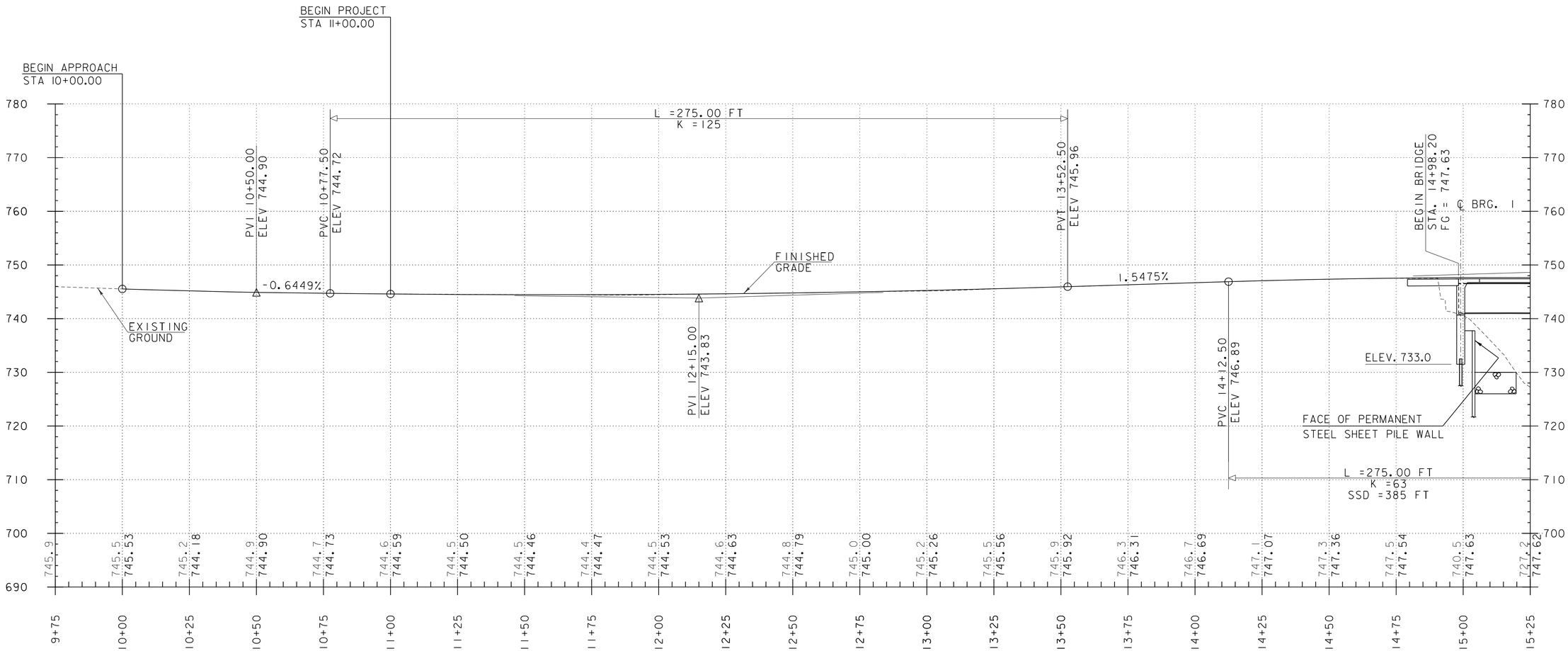

PROFILE VT 108

HOR. SCALE 1" = 20'-0"
VER. SCALE 1" = 10'-0"

NOTES:
GRADES SHOWN TO THE NEAREST TENTH ARE EXISTING GROUND ALONG THE PROPOSED CENTER LINE.

GRADES SHOWN TO THE NEAREST HUNDREDTH ARE FINISHED GRADE ALONG THE PROPOSED CENTER LINE.

CONSULTING ENGINEERS

PROJECT NAME: STOWE	
PROJECT NUMBER: BRF 0235(15)	
FILE NAME: z88cl90pro.dgn	PLOT DATE: 3/9/2015
PROJECT LEADER: J. BYATT	DRAWN BY: S. FORTIER
DESIGNED BY: K. RUTTER	CHECKED BY: C. GREGORY
VT 108 PROFILE SHEET 1	SHEET 17 OF 79

CLD 12-0120 MODEL: VT108 PRO 01

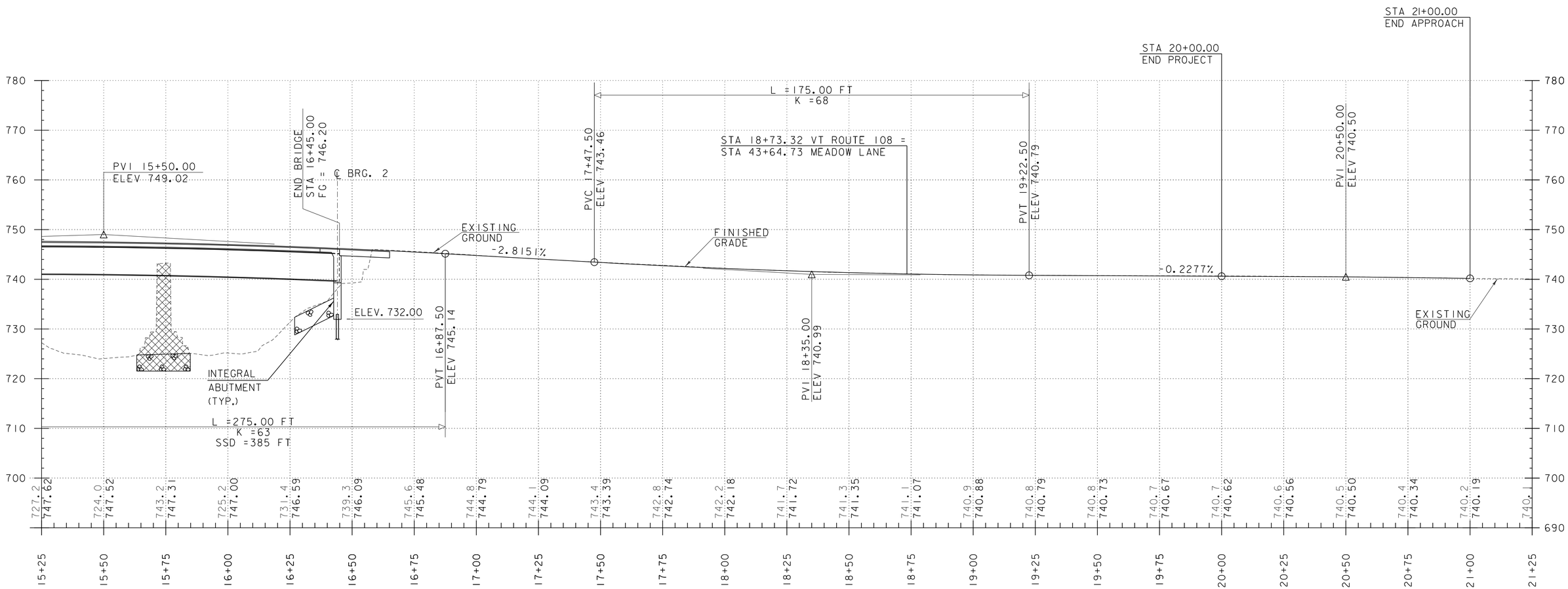

PROFILE VT 108

HOR. SCALE 1" = 20'-0"
VER. SCALE 1" = 10'-0"

NOTES:
GRADES SHOWN TO THE NEAREST TENTH ARE EXISTING GROUND ALONG THE PROPOSED CENTER LINE.

GRADES SHOWN TO THE NEAREST HUNDREDTH ARE FINISHED GRADE ALONG THE PROPOSED CENTER LINE.

CONSULTING ENGINEERS

PROJECT NAME: STOWE	
PROJECT NUMBER: BRF 0235(15)	
FILE NAME: z88c190pro.dgn	PLOT DATE: 3/9/2015
PROJECT LEADER: J. BYATT	DRAWN BY: S. FORTIER
DESIGNED BY: K. RUTTER	CHECKED BY: C. GREGORY
VT 108 PROFILE SHEET 2	SHEET 18 OF 79

MODEL: VT108 PRO 02

CLD 12-0120

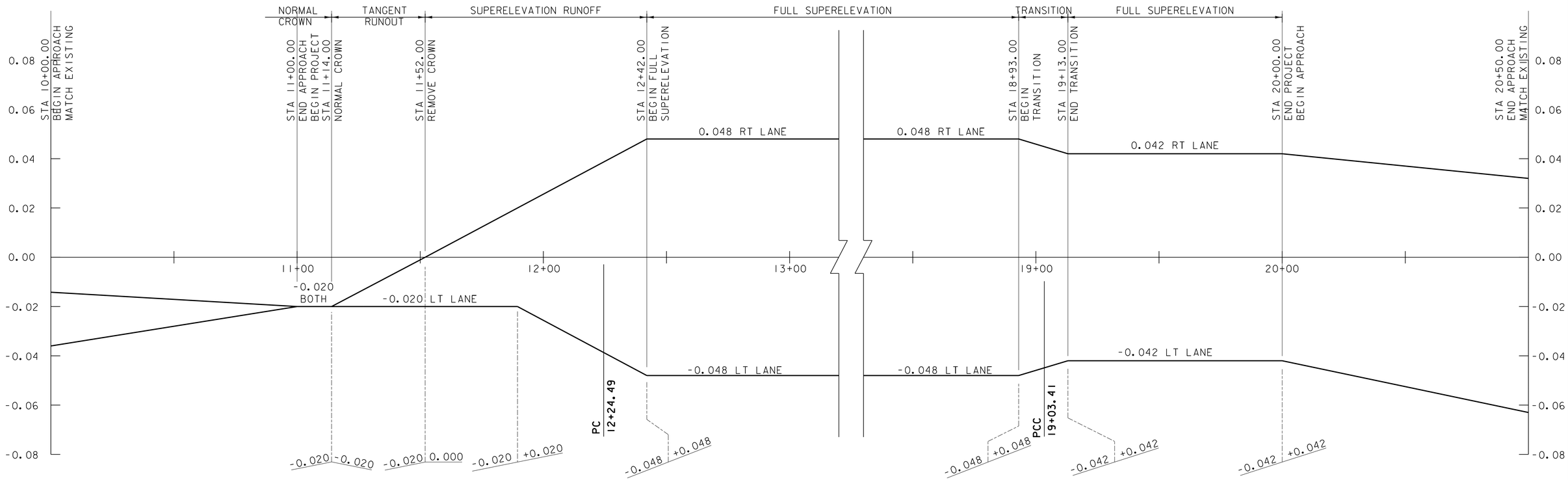

VT 108 BANKING DIAGRAM

HOR. SCALE 1" = 20'-0"
VER. SCALE 1" = .02'

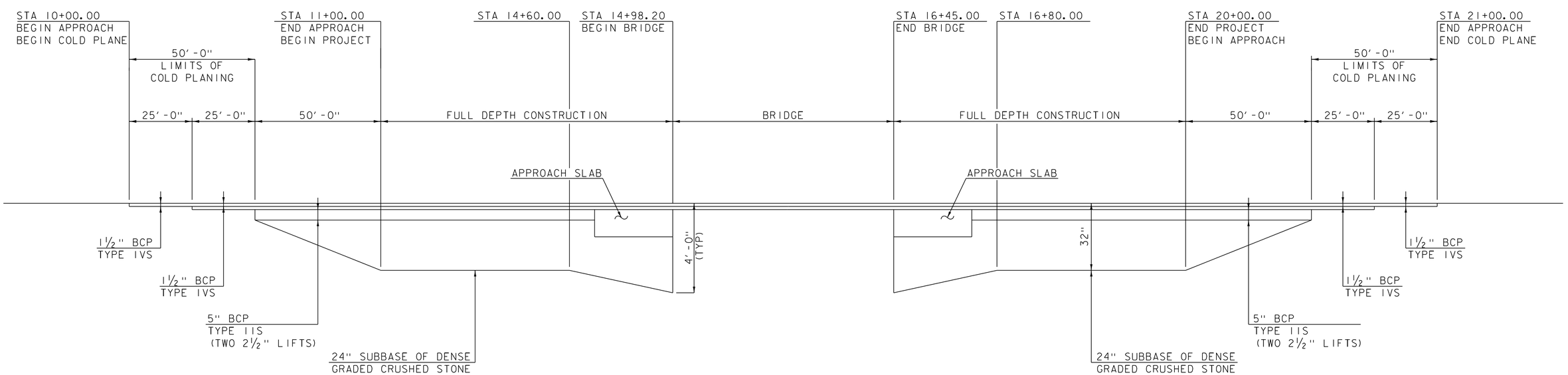

VT 108 MATERIAL TRANSITION DIAGRAM

NOT TO SCALE

PROJECT NAME: STOWE	
PROJECT NUMBER: BRF 0235(15)	
FILE NAME: z88cl90bank.dgn	PLOT DATE: 3/9/2015
PROJECT LEADER: J. BYATT	DRAWN BY: K. RUTTER
DESIGNED BY: K. RUTTER	CHECKED BY: C. GREGORY
MATERIAL TRANSITION & BANKING DIAGRAM	SHEET 19 OF 79

CONSULTING ENGINEERS

CLD 12-0120 MODEL: 01

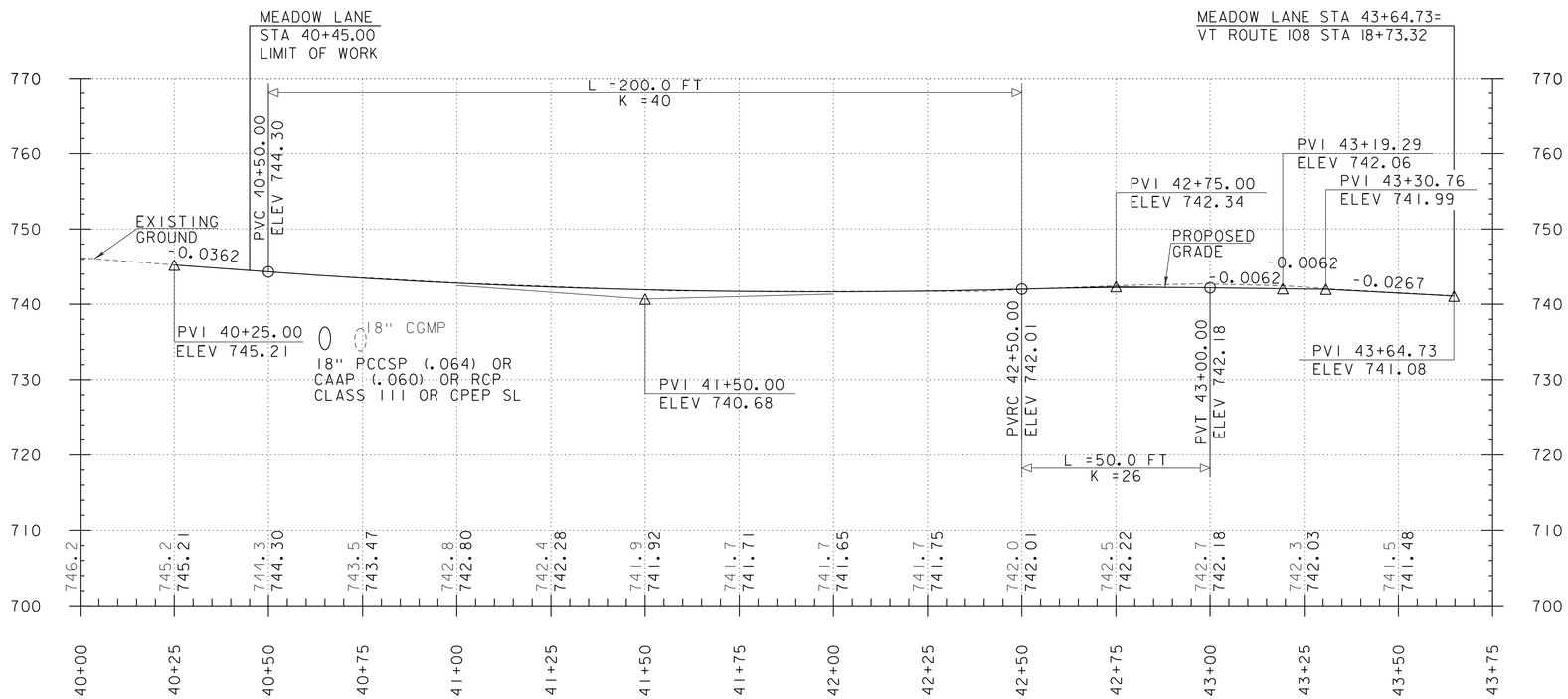

PROFILE MEADOW LANE

HOR. SCALE 1" = 20'-0"
VER. SCALE 1" = 10'-0"

NOTES:
GRADES SHOWN TO THE NEAREST TENTH ARE EXISTING GROUND ALONG THE PROPOSED CENTER LINE.

GRADES SHOWN TO THE NEAREST HUNDREDTH ARE FINISHED GRADE ALONG THE PROPOSED CENTER LINE.

PROJECT NAME: STOWE	
PROJECT NUMBER: BRF 0235(15)	
FILE NAME: z88c190proMeadow.dgn	PLOT DATE: 3/9/2015
PROJECT LEADER: J. BYATT	DRAWN BY: S. FORTIER
DESIGNED BY: K. RUTTER	CHECKED BY: C. GREGORY
MEADOW LANE PROFILE SHEET	SHEET 20 OF 79

CONSULTING ENGINEERS

CLD 12-0120 MODEL: MEADOW LANE PRO

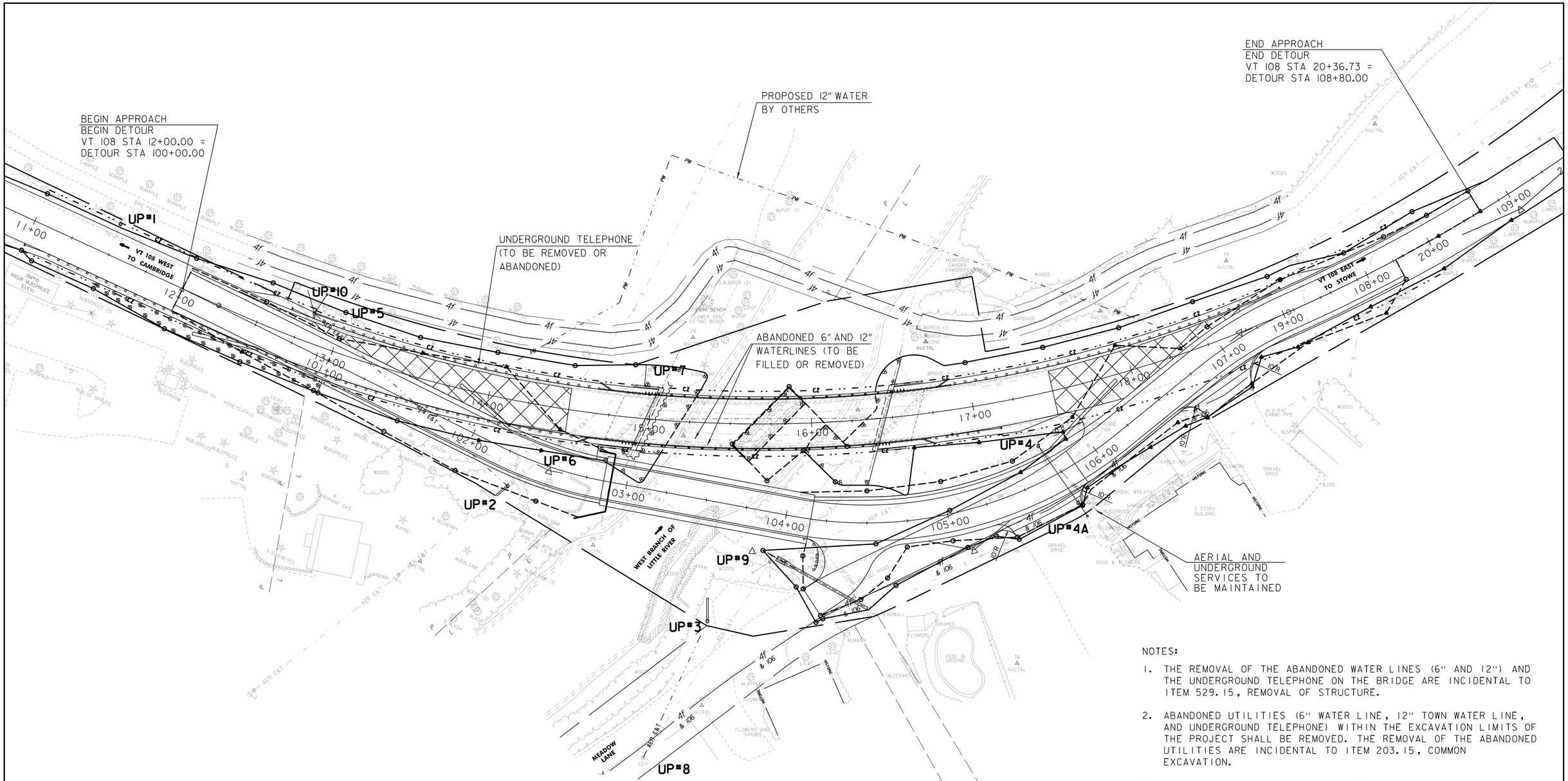

MARK	STATION	OFFSET	NORTHING	EASTING	PHASE (PRE-CONSTRUCTION/FINAL)	REMARKS	POLE NUMBER
UP#1	11+49	20' LT	719098.43	1586043.40	PRE-CONSTRUCTION	REPLACE WITH TALLER UTILITY POLE. CONNECT LINES TO UP#10.	77/35/5
UP#2	14+22	53' RT	718937.17	1586281.65	PRE-CONSTRUCTION	INSTALL NEW UTILITY POLE WITH PUSH BRACE. CONNECT LINES TO UP#10.	NEW
UP#3	15+40	122' RT	718853.95	1586404.61	PRE-CONSTRUCTION	INSTALL NEW UTILITY POLE WITH PUSH BRACE. CONNECT LINES TO UP#2, UP#4 AND UP#8.	NEW
UP#4	17+34	31' RT	EXISTING	EXISTING	PRE-CONSTRUCTION	CLEAN GUY WIRES TO FIT. CONNECT LINES TO UP#3.	81/4/54
UP#4A	17+50	70.6'RT	718926.90	1586632.88	PRE-CONSTRUCTION	INSTALL TEMPORARY UTILITY POLE AND 10' GUY. CONNECT TO UP #4.	TEMP.
					FINAL	REMOVE TEMPORARY POLE AND GUY.	
UP#5	13+07	16' LT	EXISTING	EXISTING	PRE-CONSTRUCTION	REMOVE EXISTING UTILITY POLE AND LINES	78/57
UP#6	14+47	22' RT	EXISTING	EXISTING	PRE-CONSTRUCTION	REMOVE EXISTING UTILITY POLE AND LINES	2/79/4/56
UP#7	14+97	30' LT	EXISTING	EXISTING	PRE-CONSTRUCTION	REMOVE EXISTING UTILITY POLE AND LINES	9S
UP#8	15+11	208' RT	EXISTING	EXISTING	PRE-CONSTRUCTION	CONNECT LINES TO UP#3.	22/1
UP#9	15+74	85' RT	EXISTING	EXISTING	PRE-CONSTRUCTION	REMOVE EXISTING UTILITY POLE AND LINES	2/80/55
UP#10	12+82	18' RT	719043.33	1586162.75	FINAL	INSTALL NEW UTILITY POLE, 2 DEAD ENDS AND 14' GUY. CONNECT LINES TO UP#1 AND UP#2.	NEW

NOTES:

1. THE REMOVAL OF THE ABANDONED WATER LINES (6" AND 12") AND THE UNDERGROUND TELEPHONE ON THE BRIDGE ARE INCIDENTAL TO ITEM 529.15, REMOVAL OF STRUCTURE.
2. ABANDONED UTILITIES (6" WATER LINE, 12" TOWN WATER LINE, AND UNDERGROUND TELEPHONE) WITHIN THE EXCAVATION LIMITS OF THE PROJECT SHALL BE REMOVED. THE REMOVAL OF THE ABANDONED UTILITIES ARE INCIDENTAL TO ITEM 203.15, COMMON EXCAVATION.
3. IN AREAS WHERE THE 12" ABANDONED TOWN WATER LINE IS OUTSIDE OF THE EXACATION LIMITS, THE PIPE SHALL BE FILLED WITH CONTROLLED DENSITY (FLOWABLE) FILL, ITEM 541.45.
4. IN AREAS WHERE THE 6" ABANDONED WATER LINE IS OUTSIDE OF THE EXCAVATION LIMITS THE LINE SHALL BE ABANDONED IN PLACE.
5. IN AREAS WHERE THE UNDERGROUND TELEPHONE IS OUTSIDE OF THE EXCAVATION LIMITS, THE LINE SHALL BE ABANDONED IN PLACE.
6. SEE SHEET 79 FOR THE RELOCATED 12" TOWN WATER MAIN.

SCALE 1" = 30'-0"
30 0 30

CONSULTING ENGINEERS

PROJECT NAME: STOWE
PROJECT NUMBER: BRF 0235(15)

FILE NAME: z88c190bdruti.dgn
PROJECT LEADER: J. BYATT
DESIGNED BY: K. RUTTER
UTILITY RELOCATION SHEET

PLOT DATE: 3/9/2015
DRAWN BY: K. RUTTER
CHECKED BY: C. GREGORY
SHEET 21 OF 79

CLD 12-0120 MODEL: 01

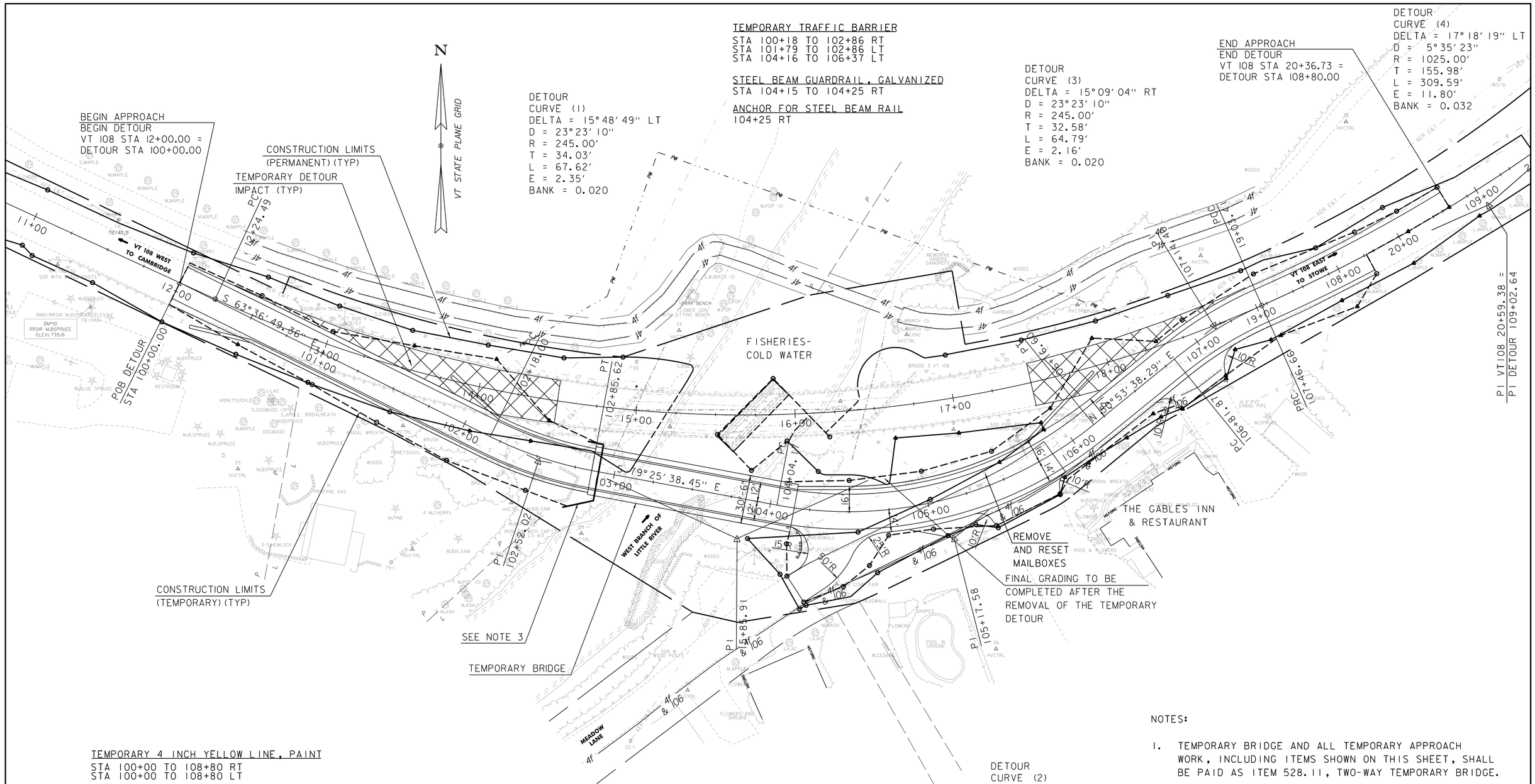

TEMPORARY 4 INCH YELLOW LINE, PAINT

STA 100+00 TO 108+80 RT
STA 100+00 TO 108+80 LT

TEMPORARY 4 INCH WHITE LINE, PAINT

STA 100+00 TO 108+20 RT
STA 100+00 TO 108+80 LT

CONSTRUCT DRIVES WITH AGGREGATE SURFACE COURSE

STA 105+25 TO 105+87 RT (18" GRAVEL)
STA 106+56 TO 107+22 RT (18" GRAVEL)

DETOUR
CURVE (2)
DELTA = 49°40'43" LT
D = 23°23'10"
R = 245.00'
T = 113.41'
L = 212.43'
E = 24.98'
BANK = 0.020

NOTES:

1. TEMPORARY BRIDGE AND ALL TEMPORARY APPROACH WORK, INCLUDING ITEMS SHOWN ON THIS SHEET, SHALL BE PAID AS ITEM 528.11, TWO-WAY TEMPORARY BRIDGE.

2. FOR TRAFFIC CONTROL, SEE SHEET 24.

3. TEMPORARY SHEET PILING OR OTHER MEANS OF RETAINING STRUCTURE MAY BE REQUIRED TO KEEP TEMPORARY IMPACTS WITHIN THE ROW. PAYMENT WILL BE INCIDENTAL TO ITEM 528.11, TWO-WAY TEMPORARY BRIDGE.

SCALE 1" = 30'-0"
30 0 30

CONSULTING ENGINEERS

PROJECT NAME: STOWE	
PROJECT NUMBER: BRF 0235(15)	
FILE NAME: z88c190bdrtcp.dgn	PLOT DATE: 3/9/2015
PROJECT LEADER: J. BYATT	DRAWN BY: K. RUTTER
DESIGNED BY: K. RUTTER	CHECKED BY: C. GREGORY
TRAFFIC CONTROL SHEET	SHEET 22 OF 79

CLD 12-0120 MODEL: 01

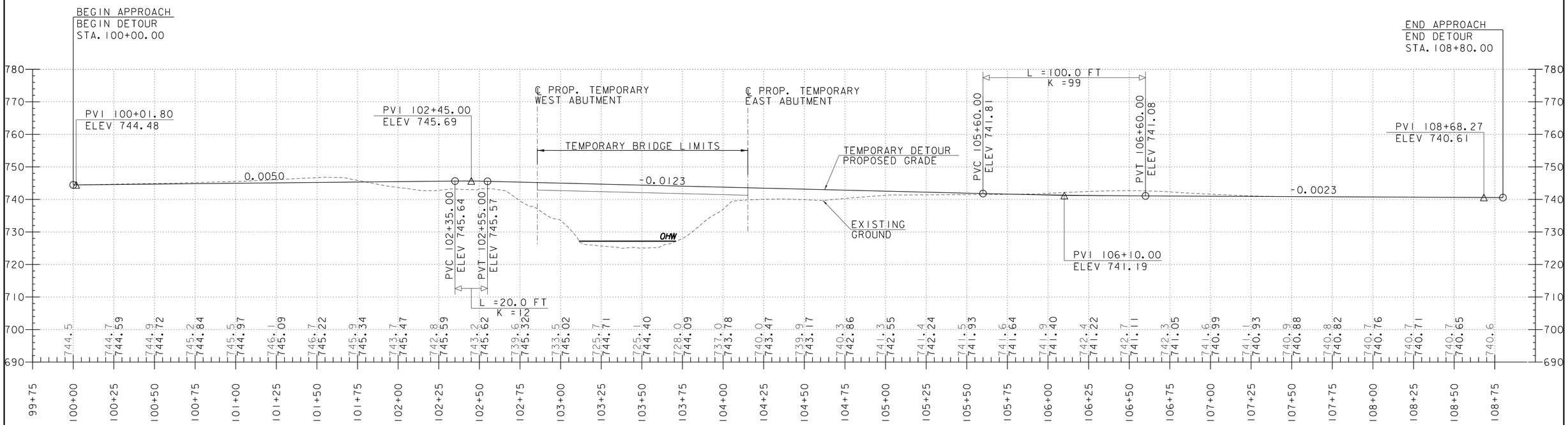

PROFILE VT108 TEMPORARY DETOUR

HOR. SCALE 1" = 30'-0"
VER. SCALE 1" = 15'-0"

NOTES:
GRADES SHOWN TO THE NEAREST TENTH ARE EXISTING GROUND ALONG THE PROPOSED CENTER LINE.

GRADES SHOWN TO THE NEAREST HUNDREDTH ARE FINISHED GRADE ALONG THE PROPOSED CENTER LINE.

CONSULTING ENGINEERS

PROJECT NAME: STOWE	
PROJECT NUMBER: BRF 0235(15)	
FILE NAME: z88c190proDetour.dgn	PLOT DATE: 3/9/2015
PROJECT LEADER: J. BYATT	DRAWN BY: K. RUTTER
DESIGNED BY: K. RUTTER	CHECKED BY: C. GREGORY
TRAFFIC CONTROL PROFILE SHEET	SHEET 23 OF 79

CLD 12-0120 MODEL: TEMP BRIDGE PRO

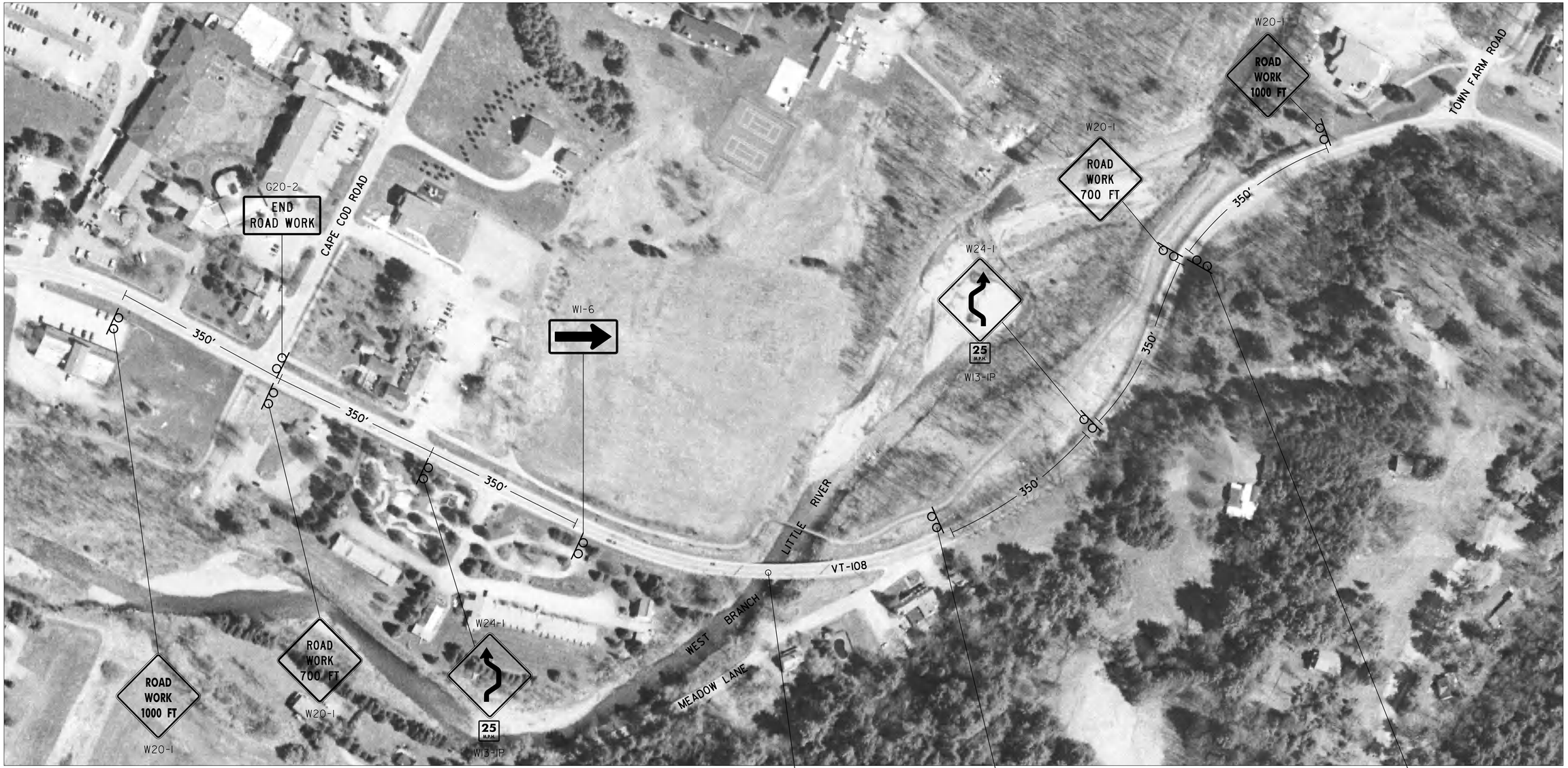

NOTES:

1. ALL TEMPORARY TRAFFIC SIGNS SHALL BE PAID FOR UNDER ITEM 641.10, TRAFFIC CONTROL, UNLESS OTHERWISE SPECIFIED.
2. NO CONSTRUCTION SIGN SHALL BE INSTALLED AS TO INTERFERE OR OBSTRUCT THE VIEW OF EXISTING TRAFFIC CONTROL DEVICES, STOPPING SIGHT DISTANCE, AND CORNER SIGHT DISTANCE FROM DRIVES AND INTERSECTING ROADS.
3. ALL PERMANENT SIGNS THAT CONFLICT WITH TEMPORARY TRAFFIC CONTROL SHALL BE COMPLETELY COVERED DURING CONSTRUCTION.
4. THE CONTRACTOR SHALL PROVIDE TWO (2) PORTABLE CHANGEABLE MESSAGE SIGNS FOR THE DURATION OF THE PROJECT, WHICH SHALL BE PAID UNDER ITEM 641.15, PORTABLE CHANGEABLE MESSAGE SIGN. THE LOCATION AND MESSAGE CONTENT SHALL BE DETERMINED IN THE FIELD BY THE ENGINEER.

100 0 100
SCALE: 1" = 100'-0"

CONSULTING ENGINEERS

PROJECT NAME: STOWE	
PROJECT NUMBER: BRF 0235(15)	
FILE NAME: z88cl90tcpsign.dgn	PLOT DATE: 3/9/2015
PROJECT LEADER: J. BYATT	DRAWN BY: M. SMITH
DESIGNED BY: K. RUTTER	CHECKED BY: C. GREGORY
TRAFFIC CONTROL SIGN PLAN	SHEET 24 OF 79

CLD 12-0120 MODEL: TCP SIGN PLAN

TEMPORARY 4 INCH WHITE LINE, PAINT
DURABLE 4 INCH WHITE LINE (OPTION BID ITEM)
STA 10+00 TO 14+75 SOLID LT & RT

TEMPORARY 4 INCH YELLOW LINE, PAINT
DURABLE 4 INCH YELLOW LINE (OPTION BID ITEM)
STA 10+00 TO 14+75 SOLID LT & RT

REMOVING SIGNS
AS SHOWN - 2

ERECTING SALVAGED SIGNS
AS SHOWN - 1

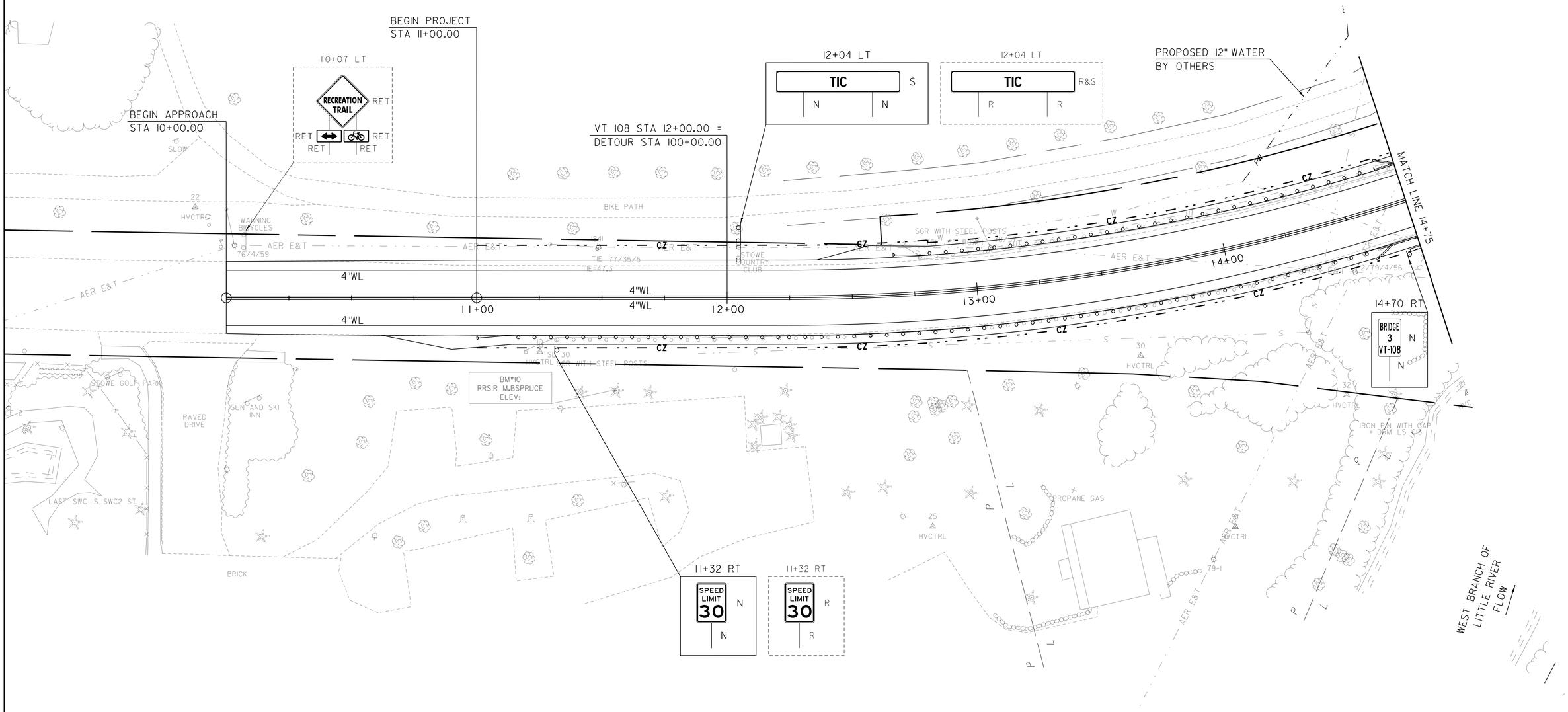

SCALE 1" = 20'-0"
20 0 20

CONSULTING ENGINEERS

PROJECT NAME: STOWE	
PROJECT NUMBER: BRF 0235(15)	
FILE NAME: z88cl90bdrts.dgn	PLOT DATE: 3/9/2015
PROJECT LEADER: J. BYATT	DRAWN BY: S. GOODWIN
DESIGNED BY: K. RUTTER	CHECKED BY: C. GREGORY
TRAFFIC SIGN & LINE LAYOUT SHEET 1	SHEET 25 OF 79

CLD 12-0120 MODEL: 01

TEMPORARY 4 INCH WHITE LINE, PAINT
DURABLE 4 INCH WHITE LINE (OPTION BID ITEM)
STA 14+75 TO 21+00 SOLID LT
STA 14+75 TO 17+56 SOLID RT
STA 17+50 TO 17+56 SOLID RT (TH 38)
STA 17+58 TO 19+01 SOLID RT (TH 38)
STA 19+01 TO 21+00 SOLID RT

TEMPORARY 4 INCH YELLOW LINE, PAINT
DURABLE 4 INCH YELLOW LINE (OPTION BID ITEM)
STA 14+75 TO 17+93 SOLID LT & RT
STA 17+54 TO 18+13 DOUBLE SOLID RT (TH 38)
STA 18+33 TO 21+00 SOLID LT & RT

TEMPORARY 24 INCH STOP BAR, PAINT
DURABLE 24 INCH STOP BAR (OPTION BID ITEM)
STA 18+14 TO 18+17 RT

TEMPORARY LETTER OR SYMBOL, PAINT
DURABLE LETTER OR SYMBOL (OPTION BID ITEM)
STA 18+08 RT - "STOP"

REMOVING SIGNS
AS SHOWN - 8

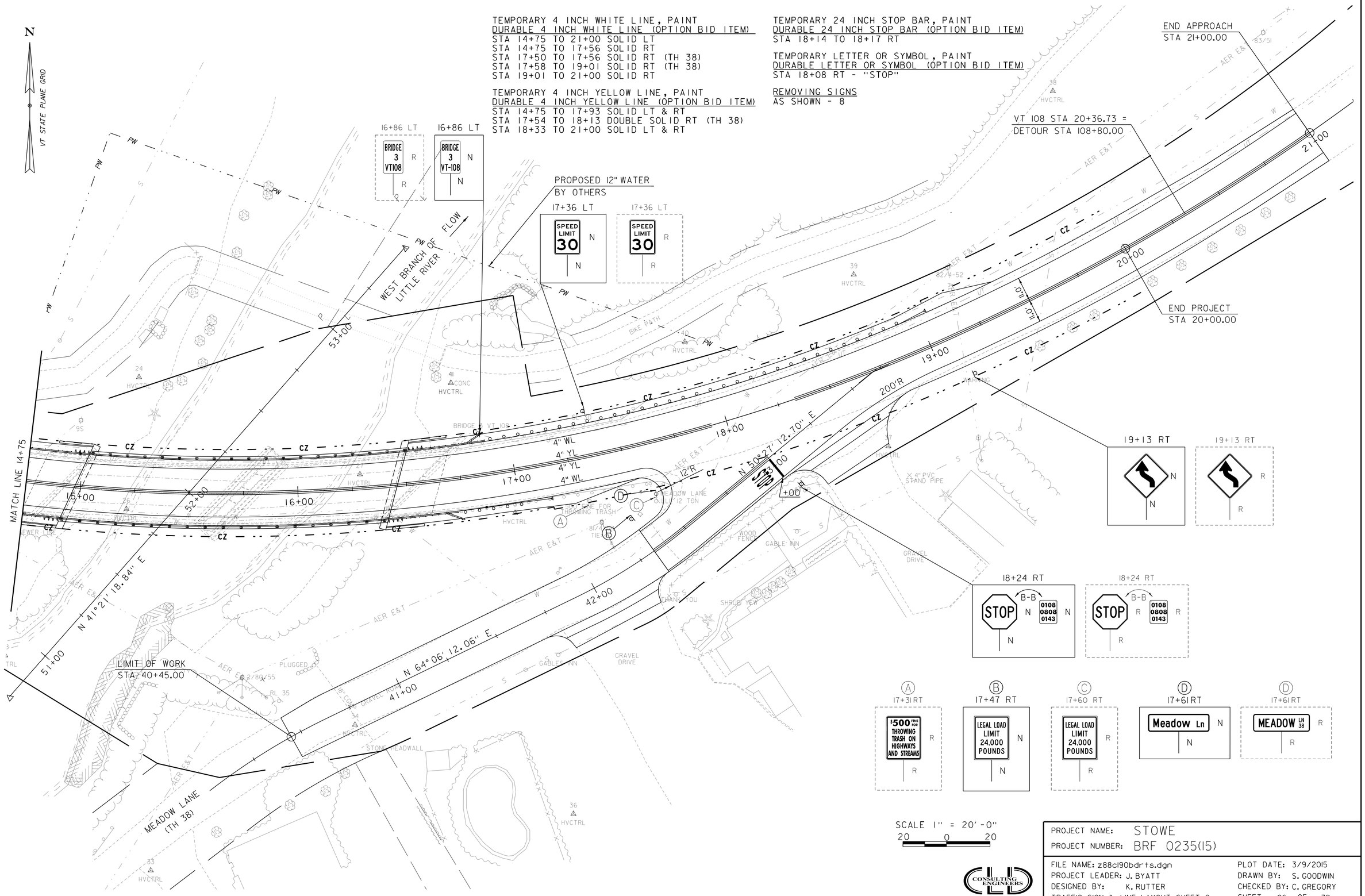

PROJECT NAME: STOWE
PROJECT NUMBER: BRF 0235(15)

FILE NAME: z88c190bdrts.dgn
PROJECT LEADER: J. BYATT
DESIGNED BY: K. RUTTER
TRAFFIC SIGN & LINE LAYOUT SHEET 2

PLOT DATE: 3/9/2015
DRAWN BY: S. GOODWIN
CHECKED BY: C. GREGORY
SHEET 26 OF 79

CLD 12-0120 MODEL: 02

STATE OF VERMONT
AGENCY OF TRANSPORTATION

TRAFFIC SIGN SUMMARY SHEET

SHSM = FHWA 2004 STANDARD HIGHWAY SIGNS AND MARKINGS BOOK AND THE 2012 SUPPLEMENT TO THE 2004 EDITION

MILEMARKER, STATION, OR SIGN NUMBER	SIGN LEGEND	SIGN DIMENSIONS			NEW & SALVAGED SIGNS				EXIST POST		NEW SIGN POSTS																		REMARKS	SIGN DETAIL		
											NO. OF POSTS	SQUARE STEEL (in)					TUBULAR ALUMINUM Ø (in)			TUBULAR STEEL Ø (in)					W-SHAPE STEEL							
		EA	WIDTH (in)	HEIGHT (in)	"A"	"B"	SALV SIGN	SALV TIS	RETAIN	SALVAGE		1.75	2.0	2.5	ANCHOR	SLEEVE	3.0	4.0	4.0 MOD	FOUND-ATION	3.0	3.5	4.0	5.0	FTG. SIZE 24"	FTG. SIZE 30"	WEIGHT	POST SIZE	SIGN FRAME REQUIRED		SHSM	DETAIL ON SHEET NUMBER	STD. SHEET NUMBER
												lb/ft					lb/ft				lb/ft												
												1.88	2.42	3.35			1.3	1.7	1.7		7.6	9.0	10.8	14.6									
STOWE VT 108																																
11+32 RT	SPEED LIMIT 30	1	24	30	5.00						1		X		X															R2-1		
12+04 LT	TIC							1			2		X		X																	
14+70 RT	BRIDGE 3 VT108	1	6	10	0.42						1	X			X														VD-701			T-42
16+86 LT	BRIDGE 3 VT108	1	6	10	0.42						1	X			X														VD-701			T-42
17+36 LT	SPEED LIMIT 30	1	24	30	5.00						1		X		X															R2-1		
17+47 RT	LEGAL LOAD LIMIT 24,000 POUNDS	1	24	30	5.00						1		X		X														VR-017			E-141
17+61 RT	Meadow Ln	1	42	12	3.50						1		X		X														D3-1		28	
18+24 RT	STOP 0108 0808 0143	1 1	30 6	30 10	6.25 0.42						1		X		X														VD-700 BACK TO BACK	R1-1		E-138
19+13 RT		1	30	30	6.25						1		X		X															W1-4		
	SUBTOTALS				32.26			1				16	120																			
	ROUNDING				0.74							0	0																			
												FT	FT	FT		EA	LB	LB	LB		LB	LB	LB	LB								
												16	120																			
	PROJECT TOTALS				SF 33 -	SF	EA.	EA. - 1				FT 106 30					LB			EA.	LB				EA.	EA.	LB					

FINAL POST LENGTHS ARE TO BE DETERMINED IN THE FIELD. POST SIZES ARE COMPUTED BASED ON INFORMATION FURNISHED ON THE STANDARD SHEETS AND VTRANS "SIGN POST DESIGN GUIDELINE."

NON-PARTICIPATING

CLD 12-0120

CONSULTING ENGINEERS

PROJECT NAME: STOWE
PROJECT NUMBER: BRF 0235(15)

FILE NAME: z88c190tsdet.dgn
PROJECT LEADER: J. BYATT
DESIGNED BY: K. RUTTER
TRAFFIC SIGN SUMMARY SHEET

PLOT DATE: 3/9/2015
DRAWN BY: S. GOODWIN
CHECKED BY: C. GREGORY
SHEET 27 OF 79

GENERAL NOTES

SIGN DESIGN AND FABRICATION NOTES

1. ALL SIGNS SHALL BE DESIGNED IN ACCORDANCE WITH THE LATEST REVISION OF THE 2009 MUTCD, THE 2004 STANDARD HIGHWAY SIGNS AND MARKINGS (SHSM), AND THE 2012 SUPPLEMENT TO THE 2004 EDITION (SHSM) DETAILS AS AVAILABLE, VAOT STANDARDS OR AS DETAILED IN THE PLANS.

2. ALL LETTERS AND NUMBERS USED FOR ALL SIGNS SHALL CONFORM TO THE APPLICABLE FONT AS DEFINED AND DETAILED IN THE 2004 SHSM AND THE 2012 SUPPLEMENT.

3. ALL ARROWS AND SYMBOLS SHALL CONFORM WITH THE 2004 SHSM AND THE 2012 SUPPLEMENT UNLESS OTHERWISE DETAILED IN THE PLANS.

4. COLORS USED ON ALL SIGNS SHALL CONFORM WITH THE REQUIREMENTS OF SECTION 1A.12 OF THE LATEST REVISION OF THE 2009 MUTCD.

5. SIGN SHEETING FOR FLUORESCENT YELLOW AND FLUORESCENT YELLOW GREEN SHALL BE AASHTO M268 (ASTM D4956) TYPE VII, VIII OR IX. ALL OTHER SIGN SHEETING SHALL BE TYPE III OR IV.

6. SHEETING TYPES AND MANUFACTURERS SHALL NOT BE MIXED ON A SINGLE SIGN ASSEMBLY. SHEETING COLOR/TYPE SHALL BE BY THE SAME MANUFACTURER AND BE CONSISTENT THROUGHOUT THE PROJECT UNLESS OTHERWISE DETAILED ON THE PLANS.

7. SIGN BASE MATERIAL FOR DELINEATORS AND MILE MARKER PLAQUES (VD-700) SHALL BE 0.063" THICK FLAT SHEET ALUMINUM. ALL TOWN HIGHWAY SIGNS (D3-1) SHALL BE 0.125" THICK FLAT SHEET ALUMINUM OR EXTRUDED ALUMINUM WITH 0.25 INCH FLANGE AND 0.090 INCH WEB. UNLESS OTHERWISE NOTED ON THE PLANS, ALL OTHER SIGNS SHALL BE FLAT SHEET ALUMINUM WITH THE FOLLOWING MINIMUM THICKNESSES:

SIGN SIZE	12" X 12"		
	18" X 18"		
	21" X 15"		
	24" X 8"		
	24" X 10"		48" X 18"
	24" X 12"	36" X 12"	48" X 24"
	24" X 18"	36" X 15"	48" X 30"
	24" X 24"	36" X 18"	48" X 42"
	24" X 30"	36" X 24"	48" X 48"
	30" X 15"	36" X 36"	48" X 60"
	30" X 18"	36" X 42"	72" X 10"
	30" X 30"	36" X 48"	72" X 12"
	30" X 42"	36" X 54"	72" X 20"
THICKNESS	0.080"	0.100"	0.125"

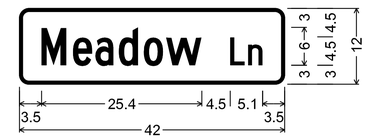

1.5" Radius, 0.5" Border, White on Green;
[Meadow] C 2K; [Ln] C 2K;

TOWN HIGHWAY SIGN D3-1

TOWN HIGHWAY SIGN SHALL BE DOUBLE SIDED AND SHALL BE INSTALLED WITH 12" BRACKETS.

SIGN POST NOTES

1. ALL SIGN POSTS SHALL BE INSTALLED IN A NEW ANCHOR. ALL SIGNS INSTALLED IN PAVED OR CONCRETE ISLANDS OR SIDEWALKS SHALL ALSO BE INSTALLED WITH AN 18" SLEEVE. PAYMENT FOR SLEEVE SHALL BE INCIDENTAL TO THE SIGN POST.

2. 1.75" SQUARE STEEL POSTS SHALL BE 14 GAUGE STEEL. 2.0" AND 2.5" SQUARE STEEL POSTS SHALL BE 12 GAUGE STEEL.

SIGN INSTALLATION NOTES

1. THE CONTRACTOR SHALL BE RESPONSIBLE FOR REPAIRING ANY DAMAGE TO PRIVATE OR PUBLIC PROPERTY CAUSED BY THE CONTRACTOR, AT THE CONTRACTOR'S EXPENSE.

2. ALL SIGNS WITHIN THE PROJECT LIMITS ARE TO BE REPLACED UNLESS OTHERWISE NOTED OR AS DIRECTED BY THE ENGINEER. SIGN LOCATIONS AS SHOWN ON THE PLANS ARE APPROXIMATE. EXACT LOCATIONS TO BE DETERMINED IN THE FIELD.

3. ALL SIGN PLACEMENT SHALL BE IN CONFORMANCE WITH VTRANS STANDARD E-121 STANDARD SIGN PLACEMENT-CONVENTIONAL ROAD, UNLESS OTHERWISE NOTED.

4. ALL SIGNS, FRAMES, MOUNTING HARDWARE, POSTS, AND ANCHORS FOR ANY SIGN ASSEMBLY SHALL BE REPLACED AT THE SAME TIME. MIXING OF OLD AND NEW SIGNS ON THE SAME ASSEMBLY WILL NOT BE ALLOWED EXCEPT AS NOTED ON THE PLANS.

5. NEW SIGNS WITH THEIR GREATER NIGHTTIME RETROREFLECTIVITY CAN OBSCURE OLDER SIGNS MOUNTED ADJACENT TO THEM. TO AVOID CONFUSION OF ROAD USERS, WORK SHALL BE COORDINATED SUCH THAT ALL SIGNS ASSOCIATED WITH A CURVE, INTERSECTION, OR SPEED CHANGE, SHALL BE REPLACED ON THE SAME DAY AND NOT LEFT INCOMPLETE NOR WITH A MIXTURE OF OLD AND NEW SIGNS WITHIN A GROUP OF ASSOCIATED SIGNS.

NOT TO SCALE

CLD 12-0120

CONSULTING ENGINEERS

PROJECT NAME: STOWE	
PROJECT NUMBER: BRF 0235(15)	
FILE NAME: z88c190tsdet.dgn	PLOT DATE: 3/9/2015
PROJECT LEADER: J. BYATT	DRAWN BY: S. GOODWIN
DESIGNED BY: K. RUTTER	CHECKED BY: C. GREGORY
SIGN DETAIL SHEET 1	SHEET 28 OF 79

ITEM 656.80 - LANDSCAPE BACKFILL TRUCK MEASUREMENT

BED	LENGTH	WIDTH	DEPTH
A	40'	8'	3'
B	20'	10'	3'
C	30'	25'	3'
D	40'	10'	3'
E	50'	9'	2'

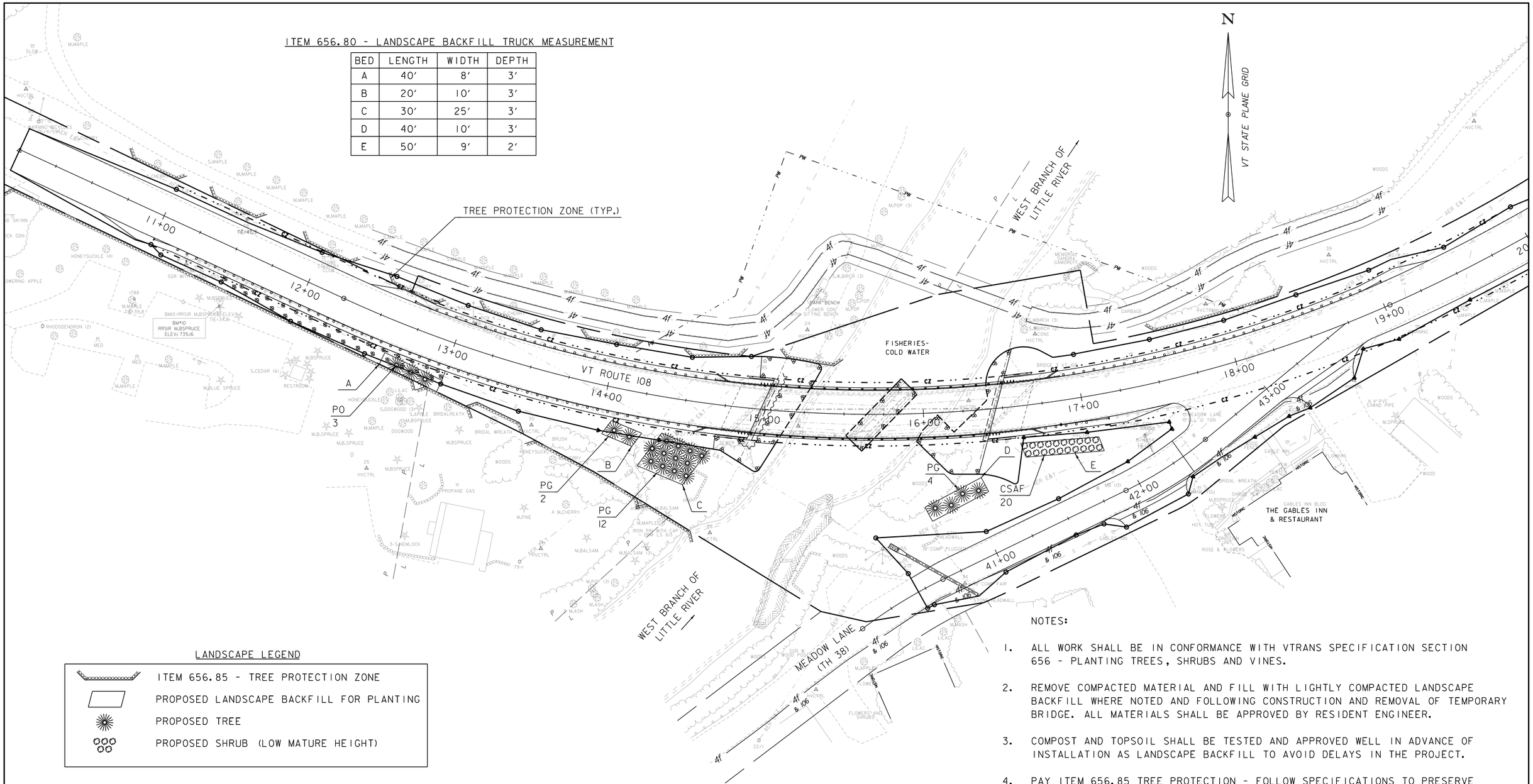

LANDSCAPE LEGEND

- ITEM 656.85 - TREE PROTECTION ZONE
- PROPOSED LANDSCAPE BACKFILL FOR PLANTING
- PROPOSED TREE
- PROPOSED SHRUB (LOW MATURE HEIGHT)

NOTES:

1. ALL WORK SHALL BE IN CONFORMANCE WITH VTRANS SPECIFICATION SECTION 656 - PLANTING TREES, SHRUBS AND VINES.
2. REMOVE COMPACTED MATERIAL AND FILL WITH LIGHTLY COMPACTED LANDSCAPE BACKFILL WHERE NOTED AND FOLLOWING CONSTRUCTION AND REMOVAL OF TEMPORARY BRIDGE. ALL MATERIALS SHALL BE APPROVED BY RESIDENT ENGINEER.
3. COMPOST AND TOPSOIL SHALL BE TESTED AND APPROVED WELL IN ADVANCE OF INSTALLATION AS LANDSCAPE BACKFILL TO AVOID DELAYS IN THE PROJECT.
4. PAY ITEM 656.85 TREE PROTECTION - FOLLOW SPECIFICATIONS TO PRESERVE AND PROTECT EXISTING VEGETATION ADJACENT TO LIMIT OF CONSTRUCTION.
5. ALL PLANTS SHALL BE INSTALLED PER VTRANS SPECIFICATION SUBSECTION 656.08, AND WATERED AT TIME OF INSTALLATION AND DURING WARRANTY PERIOD AS PER SUBSECTION 656.08(F). FOLLOW VTRANS SPECIFICATION FOR QUANTITIES AND WATERING LOG.
6. THE TREE PROTECTION ZONE FROM STA. 10+00 TO STA. 12+90, RIGHT HAS BEEN PROVIDED AT THE REQUEST OF THE ADJACENT PROPERTY OWNER FOR SAFETY PURPOSES.

PLANT LIST

QUANTITY	KEY	BOTANICAL NAME	COMMON NAME	SIZE	CONTAINER	SPACING, REMARKS, ITEMS
		EVERGREEN TREES				**ITEM NO. 656.20** (NO FALL PLANTING OF EVERGREENS)
18	PG	PICES GLAUCA	WHITE SPRUCE	7-8' HEIGHT	B&B	8' ON CENTER AS SHOWN ON PLAN
3	PO	PICEA OMORIKA	SIBERIAN SPRUCE	7-8' HEIGHT	B&B	10' ON CENTER AS SHOWN ON PLAN
		DECIDUOUS TREES				**ITEM NO. 656.35**
20	CSAF	CORNUS SERICEA ARCTIC FIRE	ARCTIC FIRE RED DOGWOOD	2 GALLON	CONTAINER	5' ON CENTER

SCALE 1" = 30'-0"
30 0 30

CONSULTING ENGINEERS

PROJECT NAME: STOWE
PROJECT NUMBER: BRF 0235(15)

FILE NAME: z88c190bdrlds.dgn
PROJECT LEADER: J. BYATT
DESIGNED BY: K. RUTTER
LANDSCAPE LAYOUT SHEET

PLOT DATE: 3/9/2015
DRAWN BY: M. SMITH
CHECKED BY: C. GREGORY
SHEET 29 OF 79

CLD 12-0120 MODEL: 01

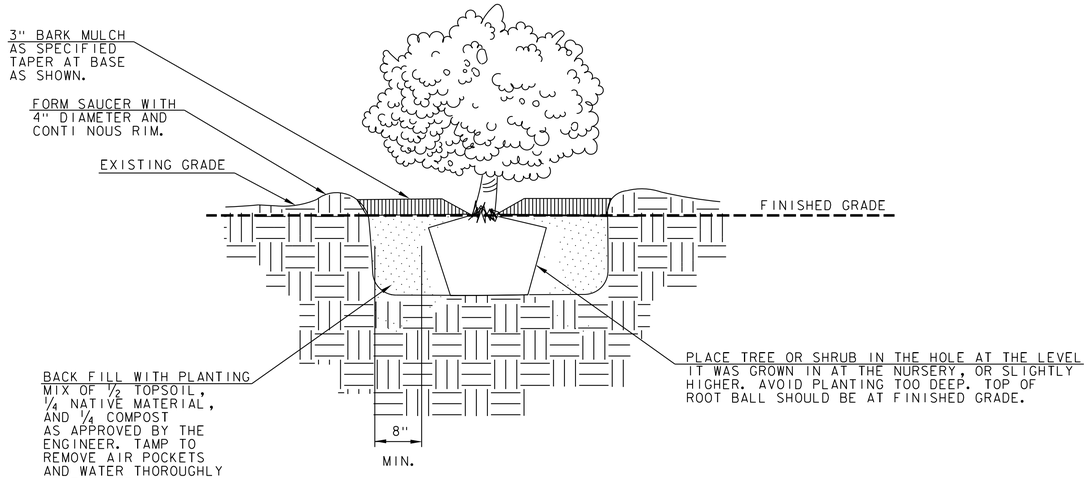

SHRUB PLANTING DETAIL

NOT TO SCALE

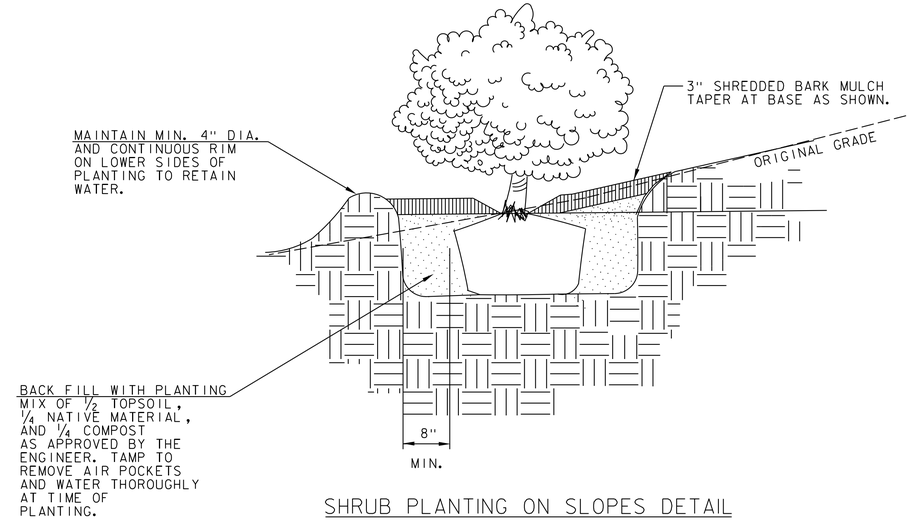

SHRUB PLANTING ON SLOPES DETAIL

GENERAL LANDSCAPE NOTES:

1. SHRUBS TO RECEIVE A MINIMUM OF 5 GALLONS AT EACH WATERING, TWICE WEEKLY DURING ESTABLISHMENT PERIOD.

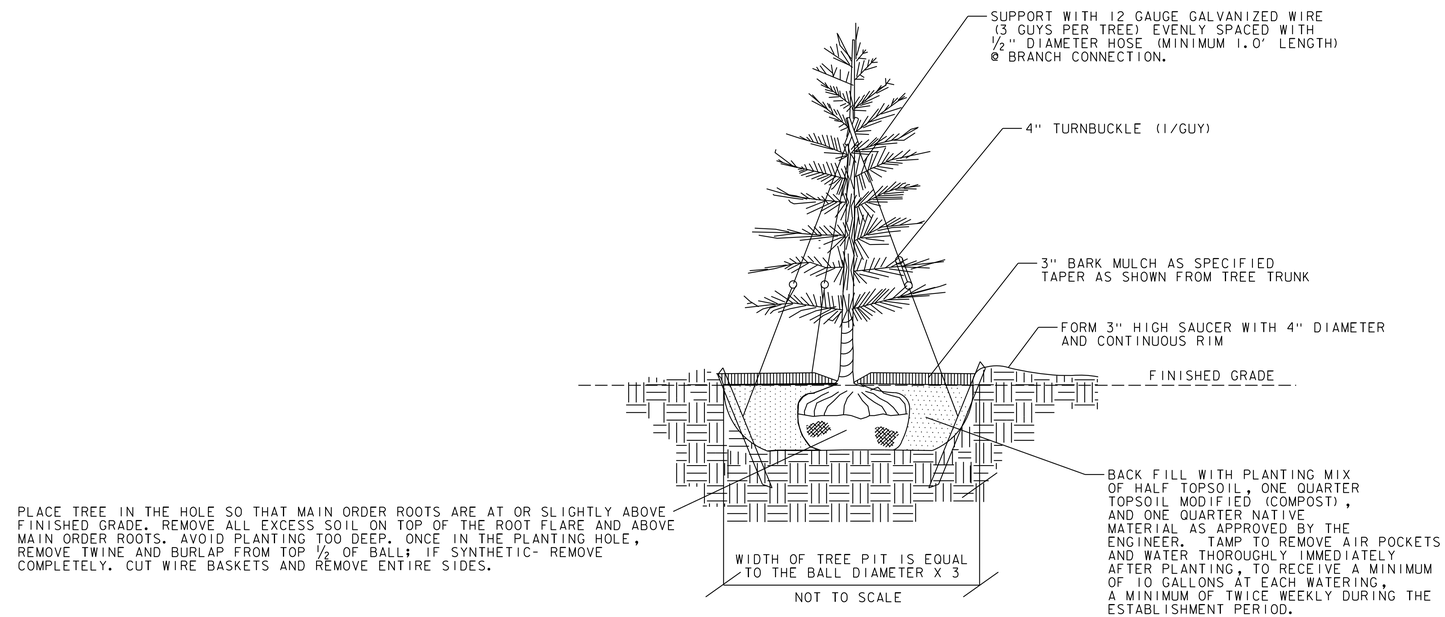

NOT TO SCALE

EVERGREEN TREE PLANTING DETAIL

NOTES:

1. ANTI-DESICCANT SPRAY IS TO BE APPLIED TO ALL EVERGREENS PER MANUFACTURER'S SPECIFICATIONS.
2. COMPLETELY REMOVE ALL GUY WIRES AND TURNBUCKLE ONE YEAR AFTER PLANTING.

GENERAL LANDSCAPE NOTES:

1. PER ITEM 651.18, FERTILIZER, MYCORRHIZAL FUNGI SHALL BE APPLIED PER MANUFACTURER'S RECOMMENDATIONS. REFER TO SUBSECTION 651.35 IN THE SPECIFICATIONS FOR THE APPLICATION OF COMPOST.
2. ORGANIC MATERIAL: TOPSOIL, COMPOST AND NATIVE EXISTING SOIL SHALL BE TESTED AT AN APPROVED LAB PRIOR TO DELIVERY ON SITE AND INSTALLATION. ORGANIC MATTER SHALL BE MINIMUM OF 5%.
3. TOPSOIL BACK FILL MIX: BACK FILL WITH PLANTING MIX OF ONE-HALF SCREENED TOPSOIL, ONE-QUARTER TOPSOIL MODIFIED (COMPOST), AND ONE QUARTER NATIVE MATERIAL AS APPROVED BY THE ENGINEER. TAMP TO REMOVE AIR POCKETS AND WATER THOROUGHLY IMMEDIATELY AFTER PLANTING, TO RECEIVE A MINIMUM OF 10 GALLONS AT EACH WATERING, TWICE WEEKLY DURING THE ESTABLISHMENT PERIOD. UNSUITABLE NATIVE MATERIAL SHALL BE REPLACED WITH IMPORTED APPROVED TOPSOIL AS DIRECTED BY THE ENGINEER.

NOT TO SCALE

PROJECT NAME: STOWE	
PROJECT NUMBER: BRF 0235(15)	
FILE NAME: z88c190ldsdet.dgn	PLOT DATE: 3/9/2015
PROJECT LEADER: J. BYATT	DRAWN BY: M. SMITH
DESIGNED BY: K. RUTTER	CHECKED BY: C. GREGORY
LANDSCAPE DETAILS	SHEET 30 OF 79

CONSULTING ENGINEERS

CLD 12-0120 MODEL: 01

SOIL CLASSIFICATION

AASHTO	
A1	Gravel and Sand
A3	Fine Sand
A2	Silty or Clayey Gravel and Sand
A4	Silty Soil - Low Compressibility
A5	Silty Soil - Highly Compressible
A6	Clayey Soil - Low Compressibility
A7	Clayey Soil - Highly Compressible

ROCK QUALITY DESIGNATION

R.Q.D. (%)	ROCK DESCRIPTION
<25	Very Poor
25 to 50	Poor
51 to 75	Fair
76 to 90	Good
>90	Excellent

SHEAR STRENGTH

UNDRAINED SHEAR STRENGTH IN P.S.F.	CONSISTENCY
<250	Very Soft
250-500	Soft
500-1000	Med. Stiff
1000-2000	Stiff
2000-4000	Very Stiff
>4000	Hard

CORRELATION GUIDE OF "N" TO DENSITY/CONSISTENCY

DENSITY (GRANULAR SOILS)		CONSISTENCY (COHESIVE SOILS)	
N	DESCRIPTIVE TERM	N	DESCRIPTIVE TERM
<5	Very Loose	<2	Very Soft
5-10	Loose	2-4	Soft
11-24	Med. Dense	5-8	Med. Stiff
25-50	Dense	9-15	Stiff
>50	Very Dense	16-30	Very Stiff
		31-60	Hard
		>60	Very Hard

COMMONLY USED SYMBOLS

▼	Water Elevation
⊗	Standard Penetration Boring
⊕	Auger Boring
⊙	Rod Sounding
S	Sample
N	Standard Penetration Test Blow Count Per Foot For: 2" O.D. Sampler 1 3/8" I.D. Sampler Hammer Weight Of 140 Lbs. Hammer Fall Of 30"
VS	Field Vane Shear Test
US	Undisturbed Soil Sample
B	Blast
DC	Diamond Core
MD	Mud Drill
WA	Wash Ahead
HSA	Hollow Stem Auger
AX	Core Size 1 1/8"
BX	Core Size 1 5/8"
NX	Core Size 2 1/8"
M	Double Tube Core Barrel Used
LL	Liquid Limit
PL	Plastic Limit
PI	Plasticity Index
NP	Non Plastic
w	Moisture Content (Dry Wgt. Basis)
D	Dry
M	Moist
MTW	Moist To Wet
W	Wet
Sat	Saturated
Bo	Boulder
Gr	Gravel
Sa	Sand
Si	Silt
Cl	Clay
HP	Hardpan
Le	Ledge
NLTD	No Ledge To Depth
CNPF	Can Not Penetrate Further
TLOB	To Ledge Or Boulder
NR	No Recovery
Rec.	Recovery
%Rec.	Percent Recovery
RQD	Rock Quality Designation
CBR	California Bearing Ratio
<	Less Than
>	Greater Than
R	Refusal (N > 100)

COLOR

blk	Black	pnk	Pink
bl	Blue	pu	Purple
brn	Brown	rd	Red
dk	Dark	tn	Tan
gry	Gray	wh	White
gn	Green	yel	Yellow
lt	Light	mltc	Multicolored
or	Orange		

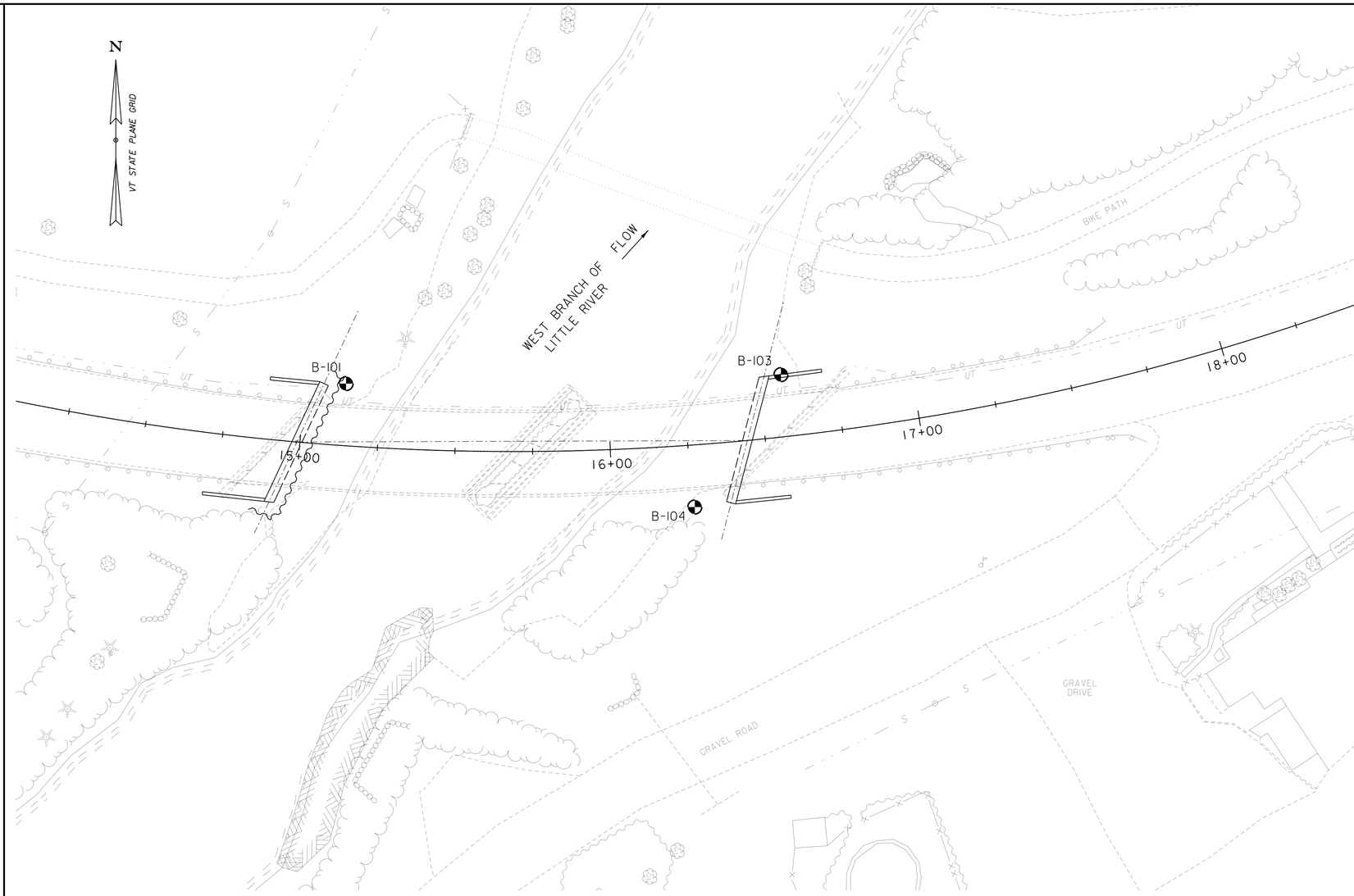

BORING PLAN

SCALE 1" = 20'-0"

20 0 10

SCALE IN FEET

BORING CHART

HOLE NO.	SURV. STATION	OFFSET	GROUND ELEV.	ELEV. TLOB
B-101	15+13.5	-20	740.0	670.5
B-103	16+57.3	-20	738.4	686.4
B-104	16+26.0	+20	745.4	706.9

DEFINITIONS (AASHTO)

BEDROCK (LEDGE) - Rock in its native location of indefinite thickness.

BOULDER - A rock fragment with an average dimension > 12 inches.

COBBLE - Rock fragments with an average dimension between 3 and 12 inches.

GRAVEL - Rounded particles of rock < 3" and > 0.0787" (#10 sieve).

SAND - Particles of rock < 0.0787" (#10 sieve) and > 0.0029" (#200 sieve).

SILT - Soil < 0.0029" (#200 sieve), non or slightly plastic and exhibits no strength when air-dried.

CLAY - Fine grained soil, exhibits plasticity when moist and considerable strength when air-dried.

VARVED - Alternate layers of silt and clay.

HARDPAN - Extremely dense soil, cemented layer, not softened when wet.

MUCK - Soft organic soil (containing > 10% organic material.

MOISTURE CONTENT - Weight of water divided by dry weight of soil.

FLOWING SAND - Granular soil so saturated (loose) that it flows into drill casing during extraction of wash rod.

STRIKE - Angle from magnetic north to line of intersection of bed with a horizontal plane.

DIP - Inclination of bed with a horizontal plane.

GENERAL NOTES

1. The subsurface explorations shown herein were made between 8/21/13 and 8/27/13 by the Agency.
2. Soil and rock classifications, properties and descriptions are based on engineering interpretation from available subsurface information by the Agency and may not necessarily reflect actual variations in subsurface conditions that may be encountered between individual boring or sample locations.
3. Observed water levels and/or conditions indicated are as recorded at the time of exploration and may vary according to the prevailing rainfall, methods of exploration and other factors.
4. Engineering judgement was exercised in preparing the subsurface information presented herein. Analysis and interpretation of subsurface data was performed and interpreted for Agency design and estimating purposes. Presentation of the information in the Contract is intended to provide the Contractor access to the same data available to the Agency. The subsurface information is presented in good faith and is not intended as a substitute for personal investigation, independent interpretation, independent analysis or judgement by the Contractor.
5. Pictorial structure details shown on the boring plan layout or soils profile are for illustrative purposes only and may not accurately portray final contract details.
6. Terminology used on boring logs to describe the hardness, degree of weathering, and spacing of fractures, joints and other discontinuities in the bedrock is defined in the AASHTO Manual on Subsurface Investigations, 1988.

CONSULTING ENGINEERS

PROJECT NAME: STOWE

PROJECT NUMBER: BRF 0235(15)

FILE NAME: z88c190bor.dgn
PROJECT LEADER: J. BYATT
DESIGNED BY: J. FRENCH
BORING INFORMATION SHEET

PLOT DATE: 3/9/2015
DRAWN BY: M. SMITH
CHECKED BY: J. BYATT
SHEET 31 OF 79

CLD 12-020 MODEL: BOR01

STATE OF VERMONT
AGENCY OF TRANSPORTATION
MATERIALS & RESEARCH SECTION
SUBSURFACE INFORMATION

BORING LOG

STOWE
BHF 0235(15)
VT-108 BR-3

Boring No.: **B-101**
Page No.: 1 of 2
Pin No.: 88C190
Checked By: MLM

Boring Crew: DAIGNEAULT, JUDKINS
Date Started: 8/23/13 Date Finished: 8/26/13
VTSPG NAD83: N 719003.02 ft E 1586383.77 ft
Station: 15+13.5 Offset: -20.00
Ground Elevation: 740.0 ft

	Casing	Sampler
Type:	WB	SS
I.D.:	4 in	1.5 in
Hammer Wt:	N.A.	140 lb.
Hammer Fall:	N.A.	30 in.
Hammer/Rod Type:	Auto/AWJ	
Rig:	CME 55 TRACK	C_E = 1.46

Groundwater Observations

Date	Depth (ft)	Notes
08/26/13	12.4	While drilling.

Depth (ft)	Strata (1)	CLASSIFICATION OF MATERIALS (Description)	Run (Dip deg.)	Core Rec. % (RQD %)	Drill Rate min/dec/ft	Blows/6" (N Value)	Moisture Content %	Gravel %	Sand %	Fines %
		Visual Description:, SiGrSa, Dk/brn, Moist, Rec. = 0.3 ft, Insufficient sample for testing.				1-1-3-5 (4)	13.2			
		Visual Description:, SaGr, Dk/brn, Moist, Rec. = 0.2 ft, Insufficient sample for testing.				6-8-6-2 (14)	9.2			
5		A-1-b, SaGr, brn, Moist, Rec. = 0.7 ft				6-9-10-10 (19)	8.3	52.8	28.1	19.1
		A-1-b, SaGr, brn, Moist, Rec. = 0.7 ft				6-7-10-13 (17)	9.8	46.1	40.9	13.0
		A-1-b, SiSaGr, brn, Moist, Rec. = 0.7 ft				10-16-14-16 (30)	9.4	40.2	36.0	23.8
10		A-1-b, SaGr, brn, Moist, Rec. = 0.5 ft, Broken Rock was within sample.				8-7-7-9 (14)	9.7	49.1	33.3	17.6
		A-2-4, SiSaGr, brn, MTW, Rec. = 0.6 ft				6-10-6-5 (16)	14.1	38.9	34.2	26.9
15		A-4, Si, gry, Wet, Rec. = 0.8 ft				3-4-3-4 (7)	26.6	0.4	13.3	86.3
		A-4, Si, gry, Wet, Rec. = 0.7 ft				1-3-3-4 (6)	27.0	3.6	8.1	88.3
		A-4, Si, gry, Wet, Rec. = 1.4 ft				2-2-2-3 (4)	30.8		3.4	96.6
20										
25		A-4, Si, gry, Wet, Rec. = 1.2 ft				5-2-3-3 (5)	27.6	6.9	4.4	88.7
30		A-4, Si, gry, Wet, Rec. = 1.0 ft				2-4-3-2 (7)	28.6		11.2	88.8
35		A-4, Si, gry, Wet, Rec. = 0.9 ft				2-3-3-4 (6)	25.3	1.6	16.2	82.2
40		A-4, Si, gry, Wet, Rec. = 1.2 ft				1-3-3-3 (6)	27.5	0.6	6.0	93.4

Notes:
1. Stratification lines represent approximate boundary between material types. Transition may be gradual.
2. N Values have not been corrected for hammer energy. C_E is the hammer energy correction factor.
3. Water level readings have been made at times and under conditions stated. Fluctuations may occur due to other factors than those present at the time measurements were made.

BOTTOM OF ABUT. I
EL. 733.0'

ESTIMATED PILE TIP
EL. 670.5'

BORING LOG 2 STOWE BHF 0235(15).GPJ VERMONT AOT.GDT 8/30/13

STATE OF VERMONT
AGENCY OF TRANSPORTATION
MATERIALS & RESEARCH SECTION
SUBSURFACE INFORMATION

BORING LOG

STOWE
BHF 0235(15)
VT-108 BR-3

Boring No.: **B-101**
Page No.: 2 of 2
Pin No.: 88C190
Checked By: MLM

Boring Crew: DAIGNEAULT, JUDKINS
Date Started: 8/23/13 Date Finished: 8/26/13
VTSPG NAD83: N 719003.02 ft E 1586383.77 ft
Station: 15+13.5 Offset: -20.00
Ground Elevation: 740.0 ft

	Casing	Sampler
Type:	WB	SS
I.D.:	4 in	1.5 in
Hammer Wt:	N.A.	140 lb.
Hammer Fall:	N.A.	30 in.
Hammer/Rod Type:	Auto/AWJ	
Rig:	CME 55 TRACK	C_E = 1.46

Groundwater Observations

Date	Depth (ft)	Notes
08/26/13	12.4	While drilling.

Depth (ft)	Strata (1)	CLASSIFICATION OF MATERIALS (Description)	Run (Dip deg.)	Core Rec. % (RQD %)	Drill Rate min/dec/ft	Blows/6" (N Value)	Moisture Content %	Gravel %	Sand %	Fines %
		A-4, Si, gry, MTW, Rec. = 1.2 ft				6-5-6-6 (11)	24.7	5.8	15.8	78.4
50		A-4, SaSi, gry, MTW, Rec. = 0.8 ft				3-4-5-6 (9)	21.6	9.3	22.5	68.2
55		Field Note:, No Recovery				18-7-7-4 (14)				
60		Field Note:, No Recovery				6-4-5-4 (9)				
65		Field Note:, No Recovery				8-6-3-3 (9)				
70		69.5 ft - 74.5 ft, Light gray to green, Chlorite-muscovite-quartz Schist, with white quartzofeldspathic layers. Moderately hard, Unweathered, Fair rock, NXMDC, RMR = 52	1 (20)	96 (28)	8 6 6 5 6	Top of Bedrock @ 69.5 ft				
75		74.5 ft - 79.5 ft, Light gray to green, Chlorite-muscovite-quartz Schist, with white quartzofeldspathic layers. Moderately hard, Unweathered, Fair rock, NXMDC, RMR = 57	2 (30)	88 (60)	5 6 6 7 8					
80		Hole stopped @ 79.5 ft								
		Remarks: 1. Hole collasped at 11.2 ft.								
85										

Notes:
1. Stratification lines represent approximate boundary between material types. Transition may be gradual.
2. N Values have not been corrected for hammer energy. C_E is the hammer energy correction factor.
3. Water level readings have been made at times and under conditions stated. Fluctuations may occur due to other factors than those present at the time measurements were made.

BORING LOG 2 STOWE BHF 0235(15).GPJ VERMONT AOT.GDT 8/30/13

CONSULTING ENGINEERS

PROJECT NAME: STOWE
PROJECT NUMBER: BRF 0235(15)

FILE NAME: z88c190bor.dgn
PROJECT LEADER: J. BYATT
DESIGNED BY: J. FRENCH
BORING LOGS (1 OF 2)

PLOT DATE: 3/9/2015
DRAWN BY: M. SMITH
CHECKED BY: J. BYATT
SHEET 32 OF 79

CLD 12-0120 $FILEABBREV$ MODEL: BOR02

STATE OF VERMONT
AGENCY OF TRANSPORTATION
MATERIALS & RESEARCH SECTION
SUBSURFACE INFORMATION

BORING LOG

STOWE
BHF 0235(15)
VT-108 BR-3

Boring No.: **B-103**
Page No.: 1 of 2
Pin No.: 88C190
Checked By: MLM

Boring Crew: DAIGNEAULT, JUDKINS
Date Started: 8/27/13 Date Finished: 8/27/13
VTSPG NAD83: N 719001.30 ft E 1586524.99 ft
Station: 16+57.3 Offset: -20.00
Ground Elevation: 738.4 ft

	Casing	Sampler
Type:	WB	SS
I.D.:	4 in	1.5 in
Hammer Wt:	N.A.	140 lb.
Hammer Fall:	N.A.	30 in.
Hammer/Rod Type:	Auto/AWJ	
Rig:	CME 55 TRACK	C_E = 1.46

Groundwater Observations

Date	Depth (ft)	Notes
08/27/13	11.4	After drilling.

Depth (ft)	Strata (1)	CLASSIFICATION OF MATERIALS (Description)	Run (Dip deg.)	Core Rec., % (RQD %)	Drill Rate minutes/ft	Blows/6" (N Value)	Moisture Content %	Gravel %	Sand %	Fines %
		A-1-b, GrSa, Dk/brn, Moist, Rec. = 0.5 ft, Broken Rock was within sample.				1-1-1-8 (2)	6.3	42.5	45.4	12.1
		A-1-a, SaGr, Lt/brn, Moist, Rec. = 0.6 ft, Lab Note: Mostly Broken Rock				3-1-3-5 (4)	4.5	65.1	24.6	10.3
5		A-1-b, SiSaGr, brn, Moist, Rec. = 0.4 ft, Broken Rock was within sample.				3-8-9-10 (17)	9.9	50.9	26.8	22.3
		A-1-b, SaGr, brn, Moist, Rec. = 0.8 ft				8-13-16-12 (29)	9.9	49.3	37.2	13.5
		A-1-b, SaGr, brn, Moist, Rec. = 0.7 ft, Broken Rock was within sample.				5-11-14-20 (25)	8.7	45.8	38.5	15.7
10		A-2-4, SiSaGr, brn, Moist, Rec. = 0.5 ft				9-9-8-5 (17)	10.2	43.0	29.8	27.2
		A-1-a, SaGr, brn, Moist, Rec. = 0.4 ft				3-5-9-5 (14)	10.2	56.3	28.9	14.8
15		Visual Description:, SaGr, gry, Moist, Rec. = 0.1 ft, Stone caught in sampler. Insufficient sample for testing.				3-4-6-8 (10)				
		A-1-b, SaGr, gry, Moist, Rec. = 0.7 ft				7-7-9-9 (16)	10.1	49.3	38.2	12.5
20		A-1-b, GrSa, gry-rust, Moist, Rec. = 0.6 ft, Lab Note: Sample had an orange colored area with the remainder of sample being gray.				9-8-7-7 (15)	13.9	33.7	48.7	17.6
25		A-4, Si, gry, MTW, Rec. = 1.0 ft				6-3-3-4 (6)	31.5	3.9	3.3	92.8
30		A-4, Si, gry, MTW, Rec. = 0.8 ft				4-3-3-3 (6)	30.3		7.6	92.4
35		A-4, SaSi, gry, MTW, Rec. = 0.8 ft				5-4-3-2 (7)	19.0	12.9	35.2	51.9
40		Field Note:, No Recovery				3-1-1-1 (2)				

BOTTOM OF ABUT. 2
EL. 732.0'

Notes:
1. Stratification lines represent approximate boundary between material types. Transition may be gradual.
2. N Values have not been corrected for hammer energy. C_E is the hammer energy correction factor.
3. Water level readings have been made at times and under conditions stated. Fluctuations may occur due to other factors than those present at the time measurements were made.

BORING LOG 2 STOWE BHF 0235(15) GPJ VERMONT AOT.GDT 9/30/13

STATE OF VERMONT
AGENCY OF TRANSPORTATION
MATERIALS & RESEARCH SECTION
SUBSURFACE INFORMATION

BORING LOG

STOWE
BHF 0235(15)
VT-108 BR-3

Boring No.: **B-103**
Page No.: 2 of 2
Pin No.: 88C190
Checked By: MLM

Boring Crew: DAIGNEAULT, JUDKINS
Date Started: 8/27/13 Date Finished: 8/27/13
VTSPG NAD83: N 719001.30 ft E 1586524.99 ft
Station: 16+57.3 Offset: -20.00
Ground Elevation: 738.4 ft

	Casing	Sampler
Type:	WB	SS
I.D.:	4 in	1.5 in
Hammer Wt:	N.A.	140 lb.
Hammer Fall:	N.A.	30 in.
Hammer/Rod Type:	Auto/AWJ	
Rig:	CME 55 TRACK	C_E = 1.46

Groundwater Observations

Date	Depth (ft)	Notes
08/27/13	11.4	After drilling.

Depth (ft)	Strata (1)	CLASSIFICATION OF MATERIALS (Description)	Run (Dip deg.)	Core Rec., % (RQD %)	Drill Rate minutes/ft	Blows/6" (N Value)	Moisture Content %	Gravel %	Sand %	Fines %
		Visual Description:, Broken Rocks, gry, Moist. Rec. = 0.1 ft, Stone caught in sampler. Insufficient sample for testing.				3-1-1-5 (2)				
50		A-1-b, SaGr, gry, Moist, Rec. = 0.7 ft, Lab Note: Broken Rock & little Weathered Rock was within sample.				19-29-R@31.0" (R)	11.3	46.0	35.2	18.8
		Field Note:, NXDC				Top of Bedrock @ 52.0 ft				
55		52.0 ft - 57.0 ft, Dark gray & black, Carbonaceous, graphitic, biotite-muscovite-quartz Phyllite, with silicic laminae. Moderately hard, Unweathered, Fair rock, NXMDC, RMR = 49	1 (45)	100 (50)		12 7 5 4 4				
60		57.0 ft - 62.0 ft, Dark gray & black, Carbonaceous, graphitic, biotite-muscovite-quartz Phyllite, with silicic laminae. Moderately hard, Unweathered, Fair rock, NXMDC, RMR = 49	2 (45)	92 (54)		4 3 4 4 4				
		Hole stopped @ 62.0 ft								
65		Remarks: 1. Hole collapsed at 7.2 ft.								
70										
75										
80										
85										

ESTIMATED
PILE TIP
EL. 686.4'

Notes:
1. Stratification lines represent approximate boundary between material types. Transition may be gradual.
2. N Values have not been corrected for hammer energy. C_E is the hammer energy correction factor.
3. Water level readings have been made at times and under conditions stated. Fluctuations may occur due to other factors than those present at the time measurements were made.

BORING LOG 2 STOWE BHF 0235(15) GPJ VERMONT AOT.GDT 9/30/13

STATE OF VERMONT
AGENCY OF TRANSPORTATION
MATERIALS & RESEARCH SECTION
SUBSURFACE INFORMATION

BORING LOG

STOWE
BHF 0235(15)
VT-108 BR-3

Boring No.: **B-104**
Page No.: 1 of 1
Pin No.: 88C190
Checked By: MLM

Boring Crew: DAIGNEAULT, JUDKINS
Date Started: 8/21/13 Date Finished: 8/22/13
VTSPG NAD83: N 718957.36 ft E 1586495.57 ft
Station: 16+26 Offset: 20.00
Ground Elevation: 745.5 ft

	Casing	Sampler
Type:	WB	SS
I.D.:	4 in	1.5 in
Hammer Wt:	N.A.	140 lb.
Hammer Fall:	N.A.	30 in.
Hammer/Rod Type:	Auto/AWJ	
Rig:	CME 55 TRACK	C_E = 1.46

Groundwater Observations

Date	Depth (ft)	Notes
08/22/13	19.5	While drilling.

Depth (ft)	Strata (1)	CLASSIFICATION OF MATERIALS (Description)	Run (Dip deg.)	Core Rec., % (RQD %)	Drill Rate minutes/ft	Blows/6" (N Value)	Moisture Content %	Gravel %	Sand %	Fines %
		A-2-4, SiGrSa, brn, Moist, Rec. = 0.6 ft				1-1-4-3 (5)	4.8	26.1	49.9	24.0
		A-2-4, SiGrSa, brn, Moist, Rec. = 0.8 ft				3-3-4-3 (7)	6.3	25.4	50.2	24.4
		Visual Description:, Lots of Broken Rock with Sand, brn, Moist, Rec. = 0.2 ft				4-6-7-5 (13)	5.7			
		A-2-4, SiSaGr, brn, Moist, Rec. = 0.4 ft				6-5-5-5 (10)	14.2	36.3	33.2	30.5
		A-2-4, GrSiSa, brn, Moist, Rec. = 0.7 ft, Some Broken Rock was within sample.				6-5-22-R (27)	14.2	25.6	43.4	31.0
10		Visual Description:, Broken Rock with Silty Sand, brn-gry, Moist, Rec. = 0.2 ft				12-7-5-5 (12)	8.9			
		A-1-b, SiSaGr, brn, Moist, Rec. = 0.4 ft				2-4-6-9 (10)	9.1	51.7	26.6	21.7
		Field Note:, No Recovery				9-7-7-9 (14)				
		Visual Description:, SaGr with Broken Rock, gry, MTW, Rec. = 0.4 ft, Insufficient sample for testing.				7-7-15-15 (22)	8.9			
		A-1-b, SiSaGr, brn, MTW, Rec. = 0.3 ft				8-6-7-6 (13)	10.5	43.8	30.7	25.5
20		A-4, Si, brn, Wet, Rec. = 0.8 ft				5-2-3-3 (5)	30.8	1.9	8.7	89.4
		A-4, Si, gry, Wet, Rec. = 1.2 ft				2-2-3-3 (5)	29.6		6.2	93.8
30		A-4, SaSi, gry, Wet, Rec. = 1.0 ft				4-6-5-4 (11)	24.1	2.0	25.2	72.8
		Visual Description:, Broken Rock with Silty Sand, gry, MTW, Rec. = 0.4 ft				11-7-6-8 (13)	7.0			
40		38.5 ft - 39.5 ft, Dark gray & black, Carbonaceous, graphitic, biotite-muscovite-quartz Phyllite, with silicic laminae. Moderately hard, Unweathered, Poor rock, NXDC, Low RQD may be due to mechanical breakage along foliation planes. RMR = 39	1 (45)	80 (0)		3 4				
		39.5 ft - 44.5 ft, Dark gray & black, Carbonaceous, graphitic, biotite-muscovite-quartz Phyllite, with silicic laminae. Moderately hard, Unweathered, Poor rock, NXMDC, Low RQD may be due to mechanical breakage along foliation planes. RMR = 39	2 (45)	100 (0)		4 5 4 5				
		44.5 ft - 49.5 ft, Dark gray & black, Carbonaceous, graphitic, biotite-muscovite-quartz Phyllite, with silicic laminae. Moderately hard, Unweathered, Poor rock, NXMDC, Low RQD may be due to mechanical breakage along foliation planes. RMR = 39	3 (45)	100 (20)		3 4 4 4 4				
50		Hole stopped @ 49.5 ft								
		Remarks: 1. Hole collasped at 13.8 ft.								

Top of Bedrock @ 38.5 ft

Notes:
1. Stratification lines represent approximate boundary between material types. Transition may be gradual.
2. N Values have not been corrected for hammer energy. C_E is the hammer energy correction factor.
3. Water level readings have been made at times and under conditions stated. Fluctuations may occur due to other factors than those present at the time measurements were made.

BORING LOG 2 STOWE BHF 0235(15) GPJ VERMONT AOT.GDT 9/30/13

CLD 12-0120 $FILEABBREV$ MODEL: BOR03

CONSULTING ENGINEERS

PROJECT NAME: STOWE
PROJECT NUMBER: BRF 0235(15)

FILE NAME: z88c190bor.dgn
PROJECT LEADER: J. BYATT
DESIGNED BY: J. FRENCH
BORING LOGS (2 OF 2)

PLOT DATE: 3/9/2015
DRAWN BY: M. SMITH
CHECKED BY: J. BYATT
SHEET 33 OF 79

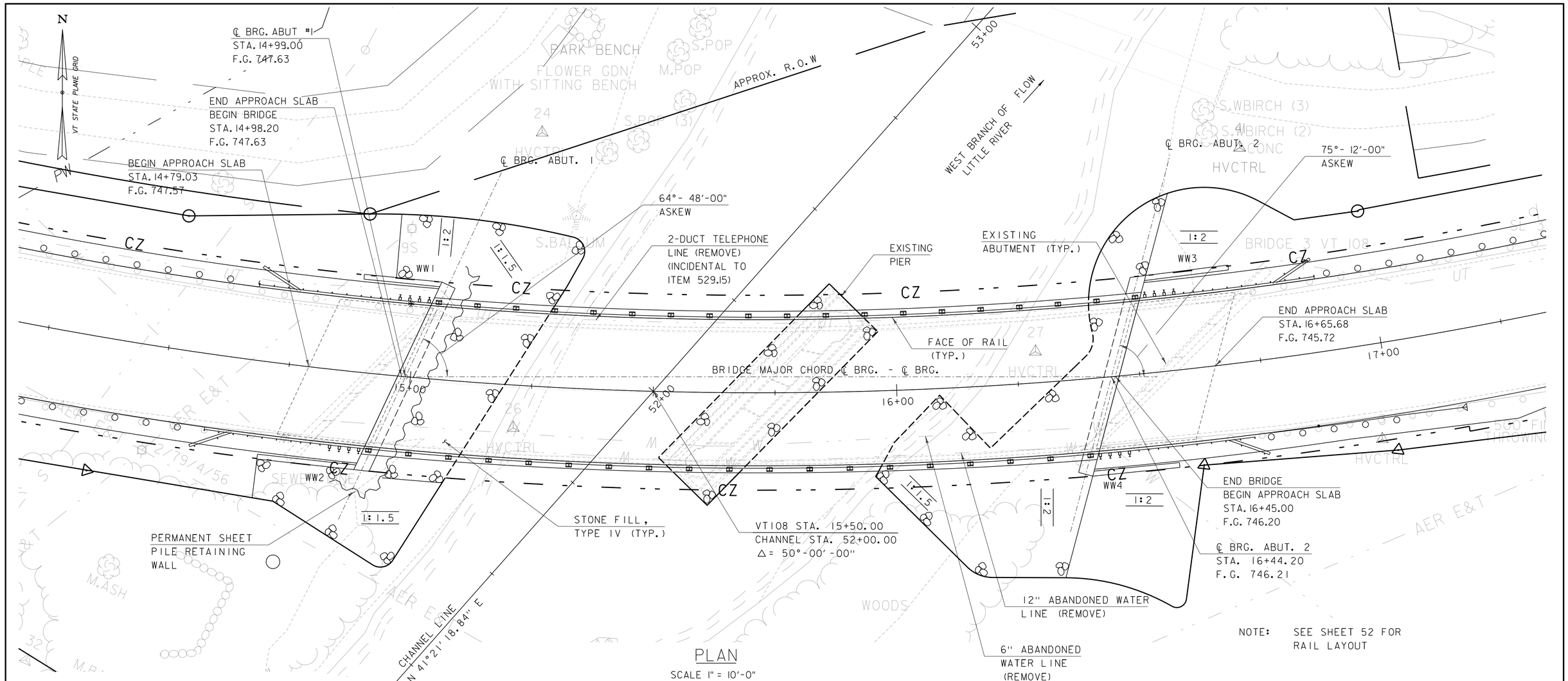

NOTE: SEE SHEET 52 FOR RAIL LAYOUT

PLAN

SCALE 1" = 10'-0"

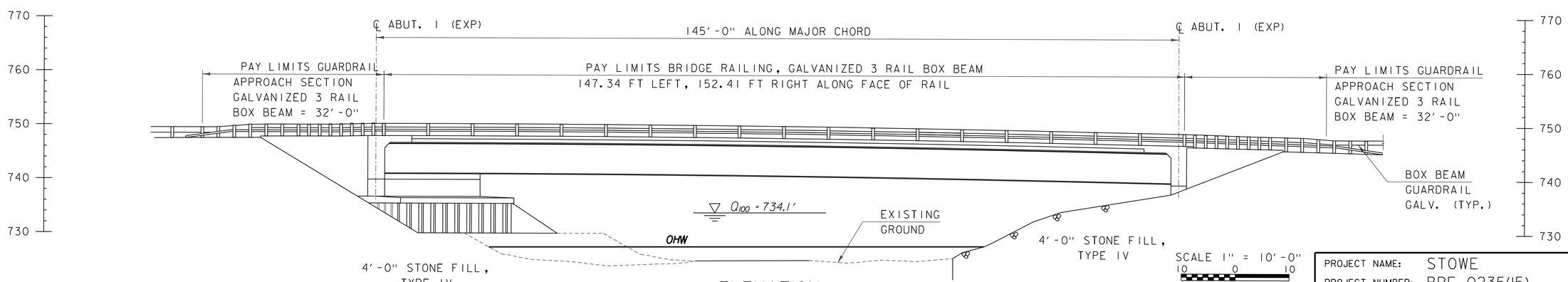

ELEVATION

SCALE 1" = 10'-0"

SCALE 1" = 10'-0"
10 0 10

PROJECT NAME: STOWE	
PROJECT NUMBER: BRF 0235(15)	
FILE NAME: z88c190pe.dgn	PLOT DATE: 3/9/2015
PROJECT LEADER: J. BYATT	DRAWN BY: M. SMITH
DESIGNED BY: J. FRENCH	CHECKED BY: J. BYATT
PLAN AND ELEVATION	SHEET 34 OF 79

CONSULTING ENGINEERS

CLD 12-0120 MODEL: PE01

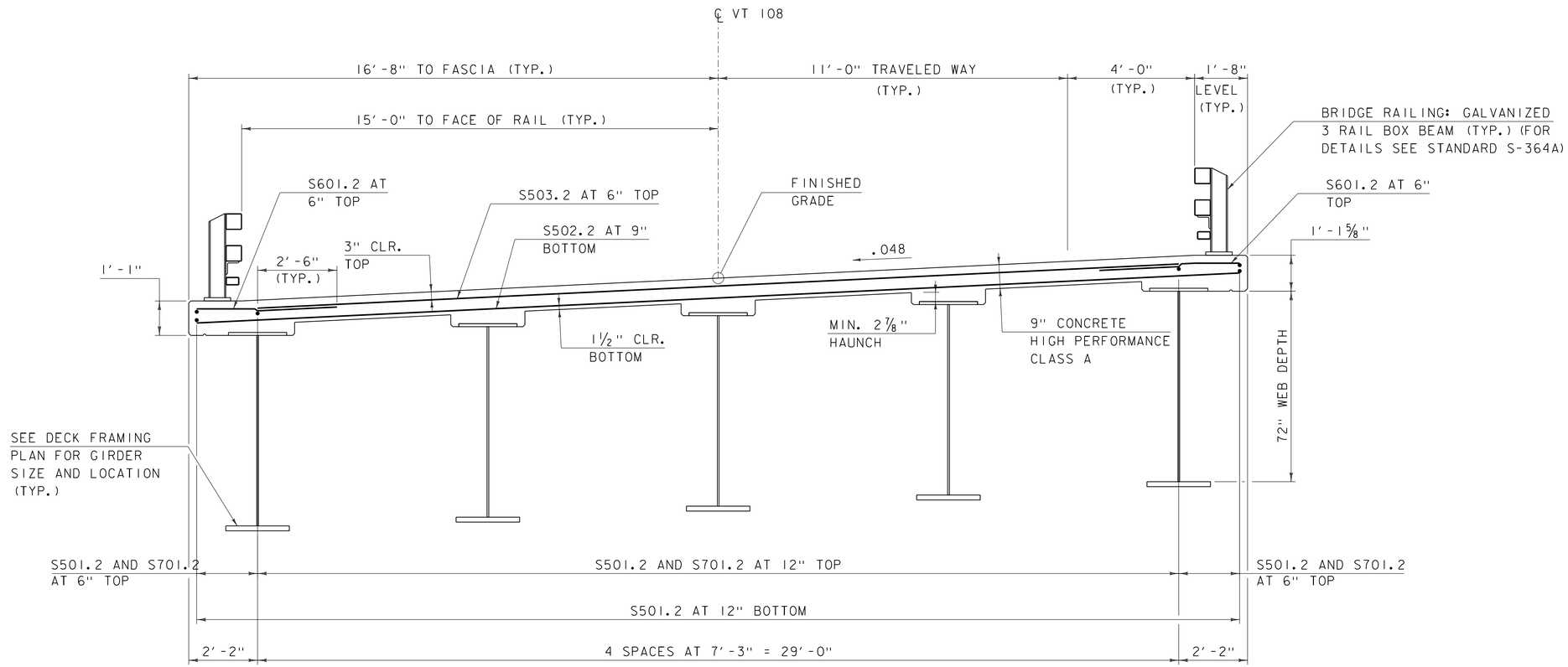

DECK TYPICAL

SCALE: 1/2" = 1'-0"

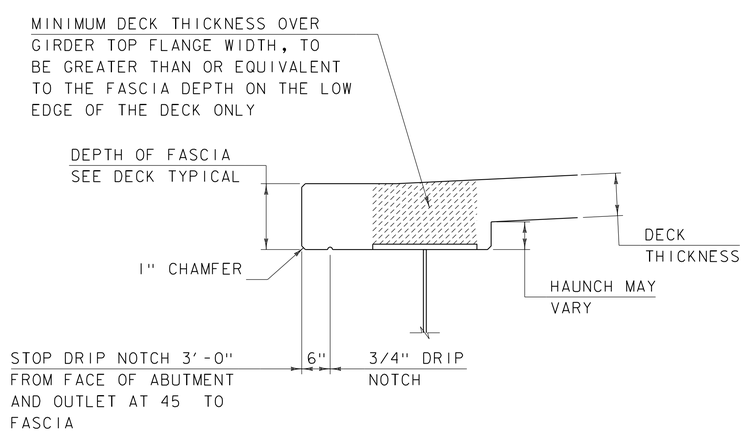

FASCIA & DRIP NOTCH DETAIL

SCALE: 3/8" = 1'-0"

PROJECT NAME: STOWE	
PROJECT NUMBER: BRF 0235(15)	
FILE NAME: z88c190sup.dgn	PLOT DATE: 3/9/2015
PROJECT LEADER: J. BYATT	DRAWN BY: M. SMITH
DESIGNED BY: J. FRENCH	CHECKED BY: J. BYATT
TYPICAL BRIDGE SECTION	SHEET 35 OF 79

CLD CONSULTING ENGINEERS

CLD 12-0120 MODEL: Deck Reinforcement

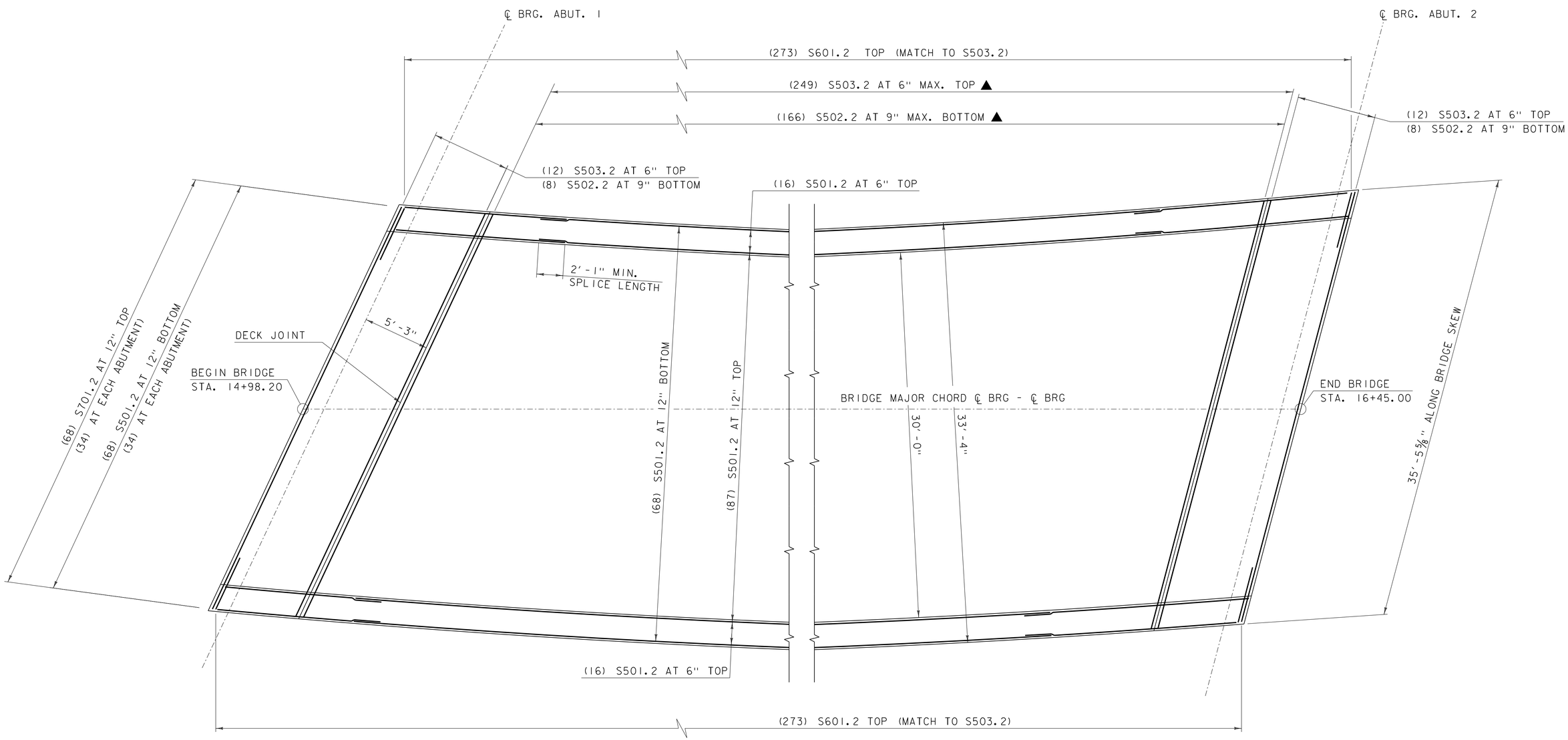

BRIDGE DECK REINFORCING PLAN

SCALE: 1/4" = 1'-0"

PROJECT NAME: STOWE	
PROJECT NUMBER: BRF 0235(15)	
FILE NAME: z88cl90sup.dgn	PLOT DATE: 3/9/2015
PROJECT LEADER: J. BYATT	DRAWN BY: M. SMITH
DESIGNED BY: J. FRENCH	CHECKED BY: J. BYATT
DECK REINFORCING PLAN	SHEET 36 OF 79

CONSULTING ENGINEERS

CLD 12-0120 MODEL: Deck Reinforcing Plan

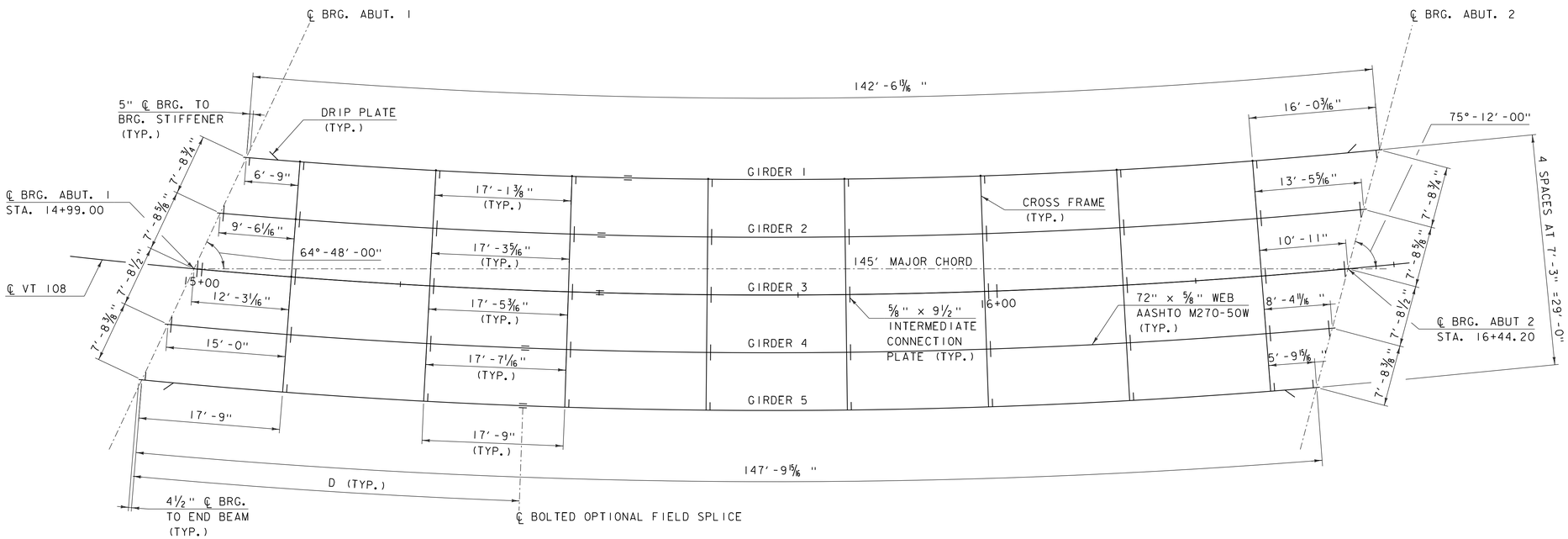

FRAMING PLAN

SCALE: 1/8″ = 1′-0″

GIRDER	MAX SWEEP DISTANCE
G1	3′-2 13/16″
G2	3′-3 1/8″
G3	3′-3 1/2″
G4	3′-3 7/8″
G5	3′-4 1/4″

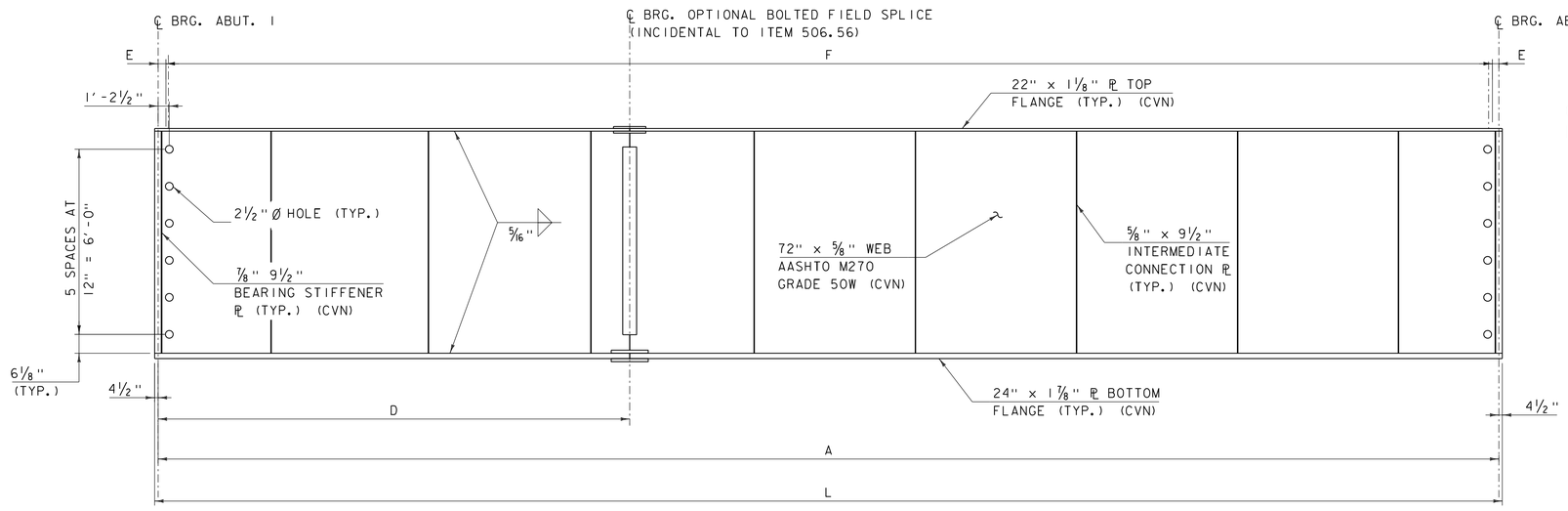

GIRDER ELEVATION

HORIZONTAL SCALE: 1/8″ = 1′-0″
VERTICAL SCALE: 1/2″ = 1′-0″

	GIRDER DIMENSIONS				SHEAR CONNECTOR SPACING		SHEAR CONNECTORS PER GIRDER
	A	L	D	RADIUS	E	F	
GIRDER 1	142.57′	143.32′	48′	785.50′	1 SP. AT 9 1/2″ = 9 1/2″	117 SP. AT 15″ = 146′-3″	240
GIRDER 2	143.88′	144.63′	48′	792.75′	1 SP. AT 9 1/8″ = 9 1/8″	116 SP. AT 15″ = 145′-0″	238
GIRDER 3	145.20′	145.95′	51′	800.00′	1 SP. AT 8 3/4″ = 8 3/4″	115 SP. AT 15″ = 143′-9″	236
GIRDER 4	146.51′	147.26′	45′	807.25′	1 SP. AT 8 1/4″ = 8 1/4″	114 SP. AT 15″ = 142′-6″	234
GIRDER 5	147.83′	148.58′	48′	814.50′	1 SP. AT 7 7/8″ = 7 7/8″	113 SP. AT 15″ = 141′-3″	232
							1180 TOTAL

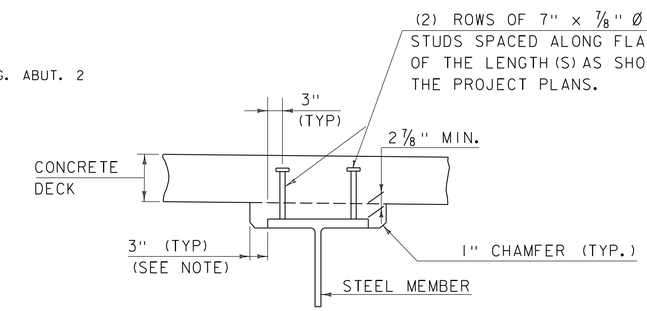

NOTES:

1. THE 3″ HORIZONTAL SECTION MAY BE ELIMINATED FOR FORMING SYSTEMS DESIGNED FOR THE CONSTRUCTION OF VERTICAL HAUNCHES. ANY VOIDS RESULTING FROM FORMING SYSTEM ELEMENTS SHALL BE FILLED WITH JOINT SEALER, POLYURETHANE MEETING THE REQUIREMENTS OF SECTION 524. THE COST OF THE JOINT SEALER, POLYURETHANE SHALL BE INCIDENTAL TO THE ADJACENT CONCRETE.

2. SHEAR CONNECTORS AT THE FIELD SPLICE SHALL BE ARRANGED TO CLEAR FASTENERS AND SHALL BE WELDED TO THE SPLICE PLATE.

HAUNCH AND SHEAR CONNECTOR DETAIL

SCALE: 3/4″ = 1′-0″

PROJECT NAME: STOWE
PROJECT NUMBER: BRF 0235(15)

FILE NAME: z88cl90sup.dgn
PROJECT LEADER: J. BYATT
DESIGNED BY: J. FRENCH
FRAMING PLAN AND DETAILS (1 OF 2)
PLOT DATE: 3/9/2015
DRAWN BY: M. SMITH
CHECKED BY: J. BYATT
SHEET 37 OF 79

CONSULTING ENGINEERS

CLD 12-0120 MODEL: Framing Plan

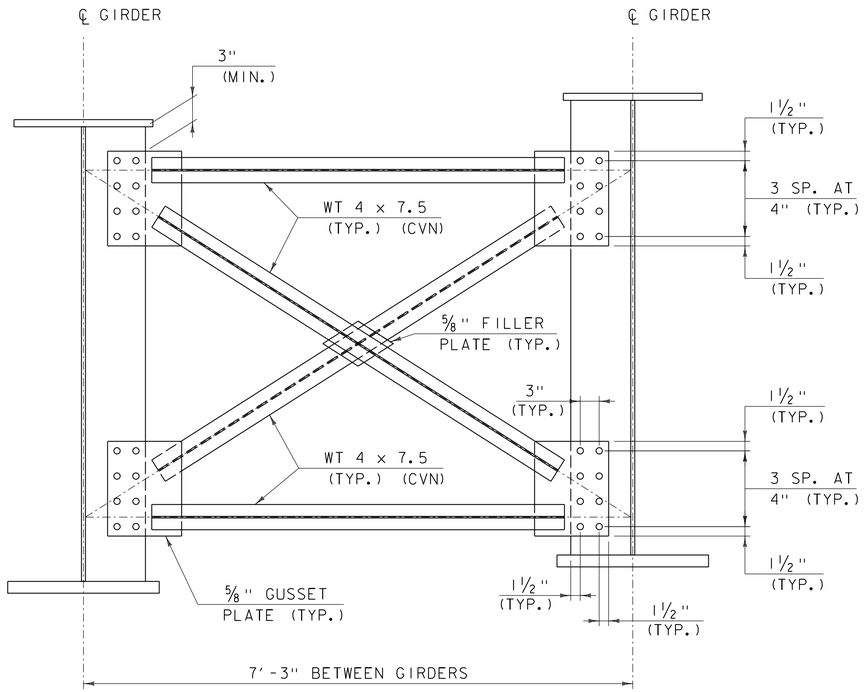

CROSS FRAME DETAIL

SCALE: 1" = 1'-0"

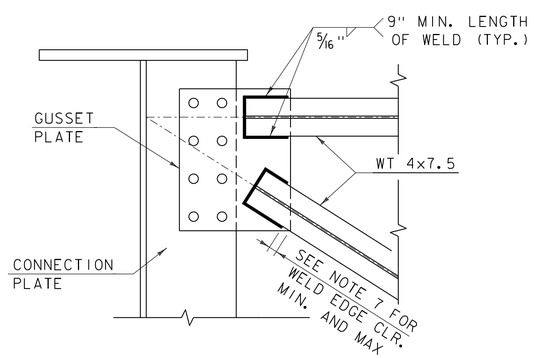

WT TO GUSSET PLATE WELD DETAIL

SCALE: 1 1/2" = 1'-0"

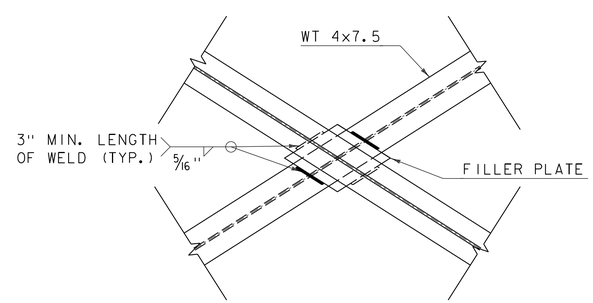

WT TO FILLER PLATE WELD DETAIL

SCALE: 1 1/2" = 1'-0"

STRUCTURAL STEEL GENERAL NOTES:

1. ALL FIELD CONNECTIONS SHALL BE MADE WITH 7/8" DIAMETER HIGH-STRENGTH BOLTS IN 15/16" DIAMETER HOLES, PER SUBSECTION 506.19, UNLESS OTHERWISE SPECIFIED.
2. ALL WELDING SHALL CONFORM TO THE PROVISIONS OF SUBSECTION 506.10.
3. ANY CONNECTIONS THAT ARE NOT DETAILED ON THE PLANS SHALL BE DETAILED BY THE FABRICATOR AND SUBMITTED TO THE STRUCTURES ENGINEER FOR APPROVAL.
4. STRUCTURAL STEEL MEMBERS DESIGNATED "CVN" IN THE PLANS SHALL BE CHARPY V-NOTCH TESTED IN ACCORDANCE WITH SUBSECTION 714.01 OF THE STANDARD SPECIFICATIONS.
5. ENDS OF GIRDERS ARE TO BE VERTICAL IN THEIR FINAL POSITION.
6. AFTER SUPERSTRUCTURE STEEL HAS BEEN ERECTED, ELEVATIONS ALONG THE TOP OF THE GIRDERS SHALL BE TAKEN AS DIRECTED BY THE RESIDENT ENGINEER FOR USE IN DETERMINING FINISHED GRADES.
7. NO WELD FOR 1/4" MIN. - 1/2" MAX. DISTANCE FROM GUSSET PLATE EDGES.

PROJECT NAME: STOWE	
PROJECT NUMBER: BRF 0235(15)	
FILE NAME: z88c190sup.dgn	PLOT DATE: 3/9/2015
PROJECT LEADER: J. BYATT	DRAWN BY: M. SMITH
DESIGNED BY: J. FRENCH	CHECKED BY: J. BYATT
FRAMING PLAN AND DETAILS (2 OF 2)	SHEET 38 OF 79

CONSULTING ENGINEERS

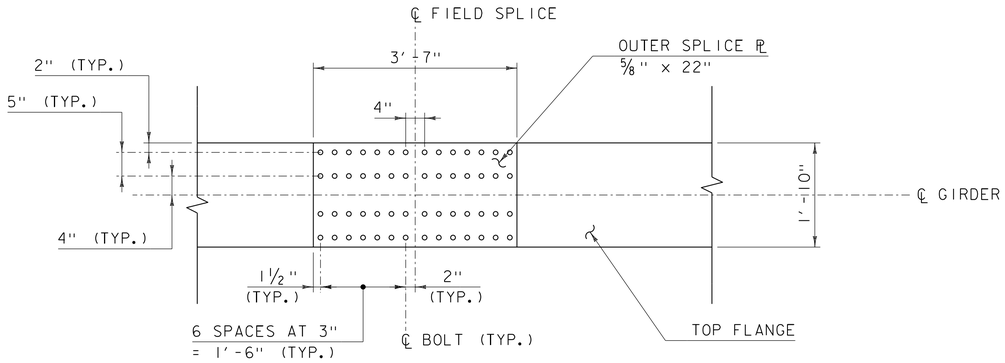

TOP FLANGE

SCALE: 3/4" = 1'-0"

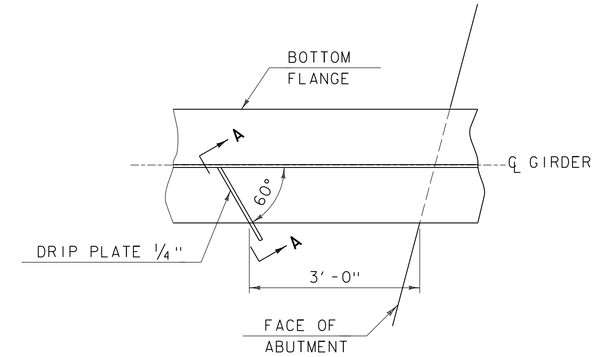

PLAN DRIP PLATE

SCALE: 3/4" = 1'-0"

NOTE: DRIP PLATES SHALL BE PLACED ON OUTSIDE EDGE OF FASCIA GIRDERS AS INDICATED ON PROJECT PLANS.

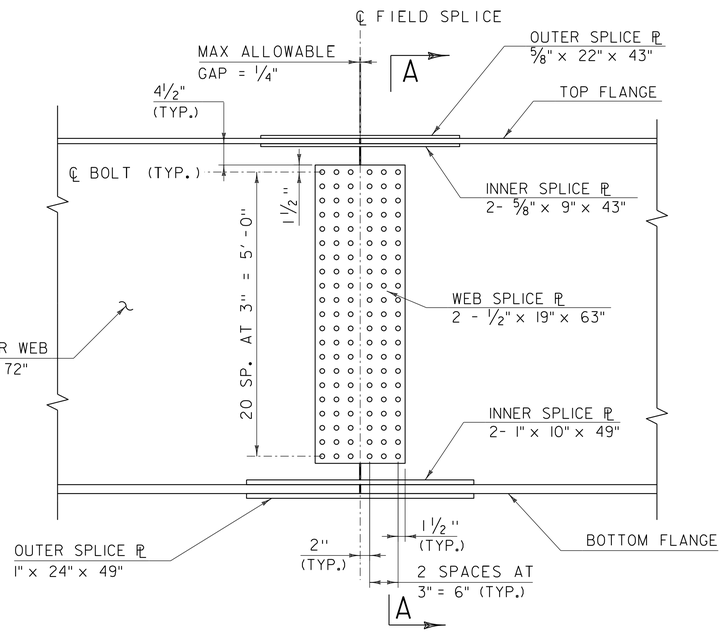

WEB SPLICE

SCALE: 3/4" = 1'-0"

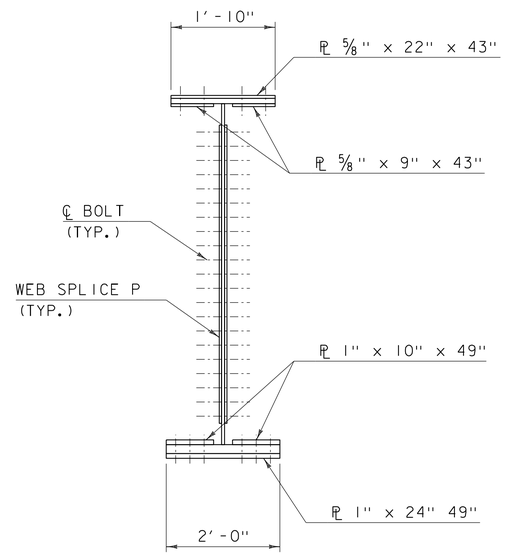

SECTION A-A

SCALE: 3/4" = 1'-0"

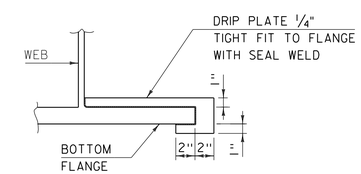

SECTION A-A

SCALE: 1 1/2" = 1'-0"

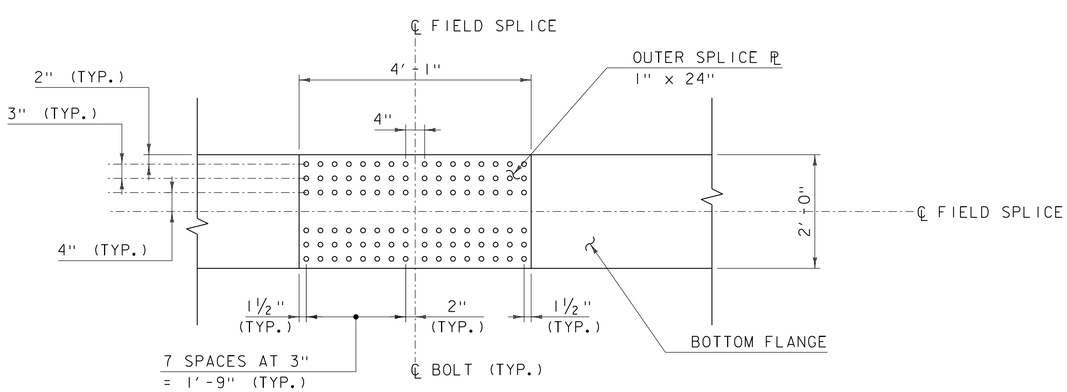

BOTTOM FLANGE

SCALE: 3/4" = 1'-0"

NOTE: BOLTED FIELD SPLICE IS OPTIONAL AND SHALL BE INCIDENTAL TO ITEM 506.56.

PROJECT NAME: STOWE	
PROJECT NUMBER: BRF 0235(15)	
FILE NAME: z88cl90sup.dgn	PLOT DATE: 3/9/2015
PROJECT LEADER: J. BYATT	DRAWN BY: M. SMITH
DESIGNED BY: J. FRENCH	CHECKED BY: J. BYATT
SPLICE DETAILS	SHEET 39 OF 79

CONSULTING ENGINEERS

MODEL: Splice Details

CLD 12-0120

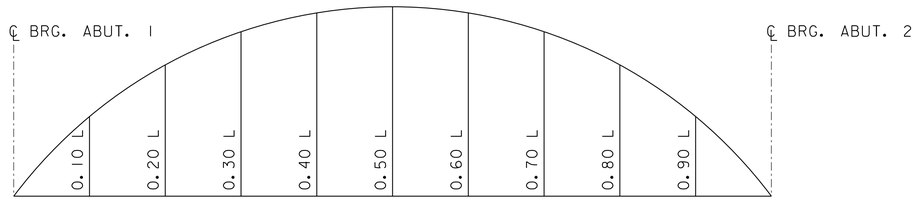

CAMBER DIAGRAM

SEE TABLES BELOW

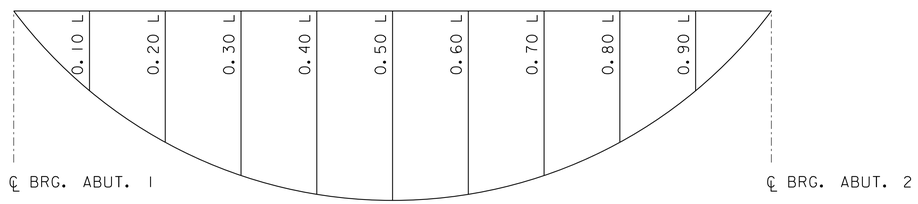

DEAD LOAD DEFLECTION DIAGRAM

SEE TABLES BELOW

		CAMBER TABLE AT 1/10TH POINTS (INCHES)								
	POINT ON GIRDER	0.10L	0.20L	0.30L	0.40L	0.50L	0.60L	0.70L	0.80L	0.90L
GIRDER 1	STEEL DL	0	1/2	3/4	7/8	1	7/8	12/16	4/8	0
	CONCRETE SLAB DL	9/16	1	1 3/8	1 5/8	1 3/4	1 5/8	1 7/16	1	9/16
	SUPERIMPOSED DL	0	0	0	0	0	0	0	0	0
	VERTICAL CURVE	1 13/16	3 3/16	4 3/16	4 13/16	5	4 13/16	4 1/4	3 3/16	1 13/16
	TOTAL CAMBER	2 5/8	5	6 3/8	7 3/8	7 11/16	7 3/8	6 3/8	5	2 5/8
GIRDER 2	STEEL DL	0	3/4	15/16	1	1 1/4	1	15/16	5/8	0
	CONCRETE SLAB DL	3/4	1 3/8	1 7/8	2 3/16	2 1/2	2 3/16	1 7/8	1 5/16	11/16
	SUPERIMPOSED DL	0	0	0	0	0	0	0	0	0
	VERTICAL CURVE	1 13/16	3 3/16	4 3/16	4 13/16	5	4 13/16	4 3/16	3 3/16	1 13/16
	TOTAL CAMBER	2 7/8	5 1/2	7	8	8 2/4	8	7	5 1/2	2 14/16
GIRDER 3	STEEL DL	0	7/8	1 3/16	1 1/4	1 2/4	1 1/4	1 2/16	7/8	7/16
	CONCRETE SLAB DL	7/8	1 3/4	2 1/4	2 1/2	2 13/16	2 1/2	2 2/8	1 3/4	7/8
	SUPERIMPOSED DL	0	0	0	0	0	0	0	0	0
	VERTICAL CURVE	1 13/16	3 3/16	4 3/16	4 13/16	5	4 13/16	4 3/16	3 3/16	1 13/16
	TOTAL CAMBER	3 3/16	5 13/16	7 3/4	8 15/16	9 5/16	8 15/16	7 11/16	5 3/4	3 1/8
GIRDER 4	STEEL DL	9/16	1	1 7/16	1 3/4	1 3/4	1 3/4	1 3/8	1	9/16
	CONCRETE SLAB DL	1 1/16	2	2 3/4	3	3 3/8	3	2 3/4	2	1 1/16
	SUPERIMPOSED DL	0	0	0	0	0	0	0	0	0
	VERTICAL CURVE	1 13/16	3 3/16	4 3/16	4 13/16	5	4 13/16	4 3/16	3 3/16	1 13/16
	TOTAL CAMBER	3 7/16	6 5/16	8 7/16	9 3/4	10 1/4	9 3/4	8 7/16	6 1/4	3 7/16
GIRDER 5	STEEL DL	11/16	1 1/4	1 3/4	2	2 1/8	2	1 3/4	1 1/4	11/16
	CONCRETE SLAB DL	1 1/4	2 1/4	3 1/4	3 13/16	4 1/16	3 7/8	3 5/16	2 1/2	1 1/4
	SUPERIMPOSED DL	0	0	0	0	0	0	0	0	0
	VERTICAL CURVE	1 13/16	3 3/16	4 3/16	4 13/16	5	4 13/16	4 3/16	3 3/16	1 13/16
	TOTAL CAMBER	3 3/4	6 7/8	9 1/4	10 3/4	11 1/4	10 3/4	9 1/4	6 15/16	3 3/4

CLD 12-0120 MODEL: Camber Diagram

CONSULTING ENGINEERS

PROJECT NAME: STOWE
PROJECT NUMBER: BRF 0235(15)

FILE NAME: z88cl90sup.dgn
PROJECT LEADER: J. BYATT
DESIGNED BY: J. FRENCH
CAMBER AND DEFLECTION DETAILS

PLOT DATE: 3/9/2015
DRAWN BY: M. SMITH
CHECKED BY: J. BYATT
SHEET 40 OF 79

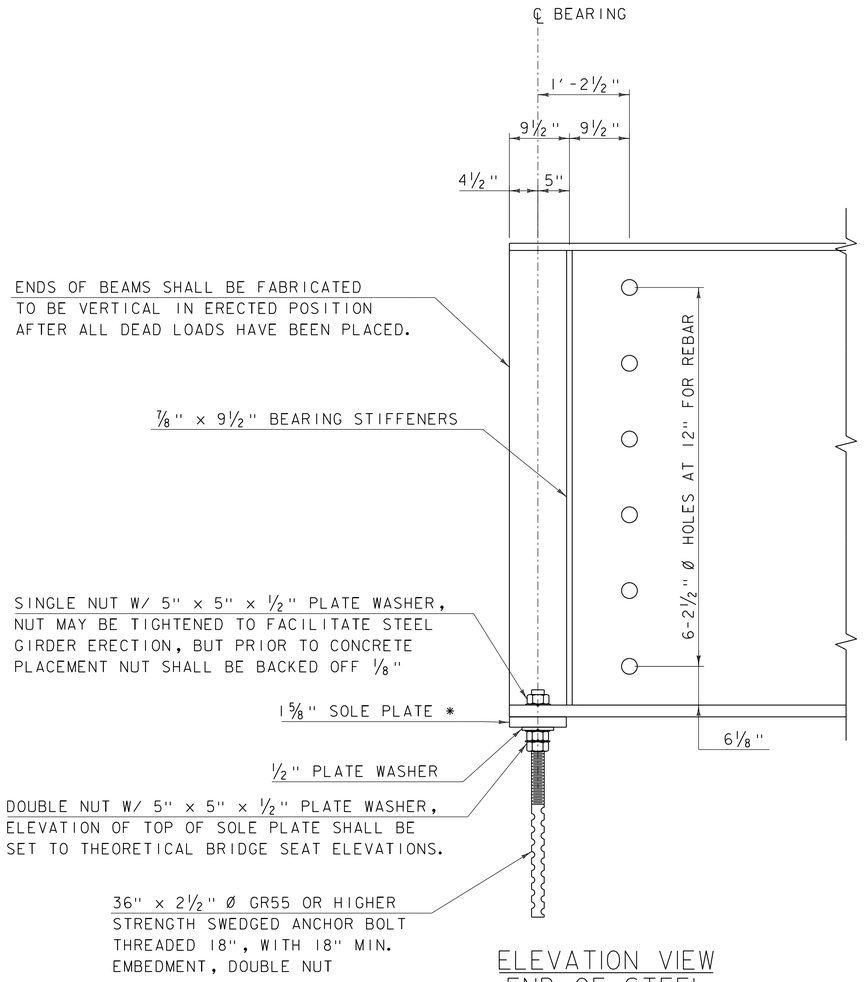

ELEVATION VIEW
END OF STEEL
MEMBER AT ABUTMENT

SCALE: 1" = 1'-0"

NOTES:

1. PAYMENT FOR THE SOLE PLATES, ANCHOR BOLTS, WASHERS AND NUTS SHALL BE INCIDENTAL TO ITEM 506.56, STRUCTURAL STEEL, CURVED PLATE GIRDER.
2. ANCHOR BOLTS SHALL BE 2½" DIAMETER, TYPE 1 BOLTS MEETING ASTM F1554, GR. 55. NUTS SHALL MEET AASHTO M291, THE CONTRACTOR SHALL ENSURE THAT THE ANCHOR BOLTS ARE INSTALLED IN PLUMB POSITION. ONE EXTRA ANCHOR BOLT SHALL BE SUPPLIED FOR TESTING PURPOSES.
3. ALL STEEL IN BEARING DEVICE ASSEMBLY SHALL BE AASHTO M270M/M270 GR 50.
4. SUBSTITUTIONS FOR BEARING DEVICE ASSEMBLY COMPONENT MATERIALS AND SIZES SHALL BE DETAILED ON THE FABRICATION DRAWINGS. ALL SUBSTITUTIONS SHALL BE APPROVED BY THE PROJECT MANAGER PRIOR TO FABRICATION AS PER SUBSECTION 506.04.

THEORETICAL TOP OF SOLE PLATE ELEVATION		
	ABUTMENT #1	ABUTMENT #2
GIRDER 1	739.66	738.12
GIRDER 2	740.01	738.53
GIRDER 3	740.35	738.93
GIRDER 3	740.69	739.34
GIRDER 4	741.04	739.74

* GREASE TOP OF SOLE PLATE BEFORE GIRDER PLACEMENT

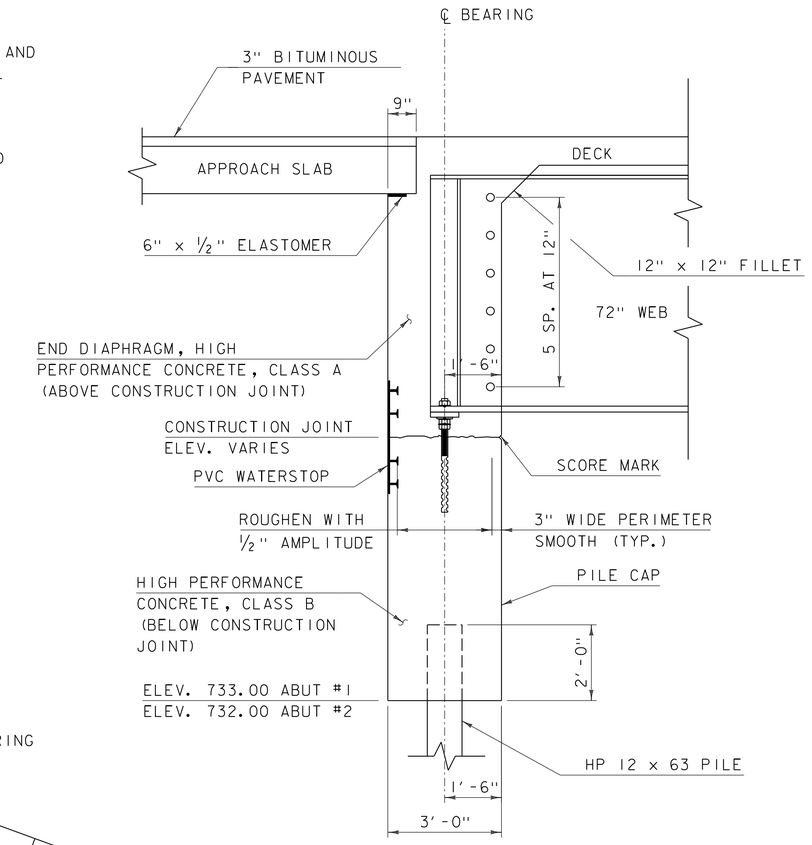

BRIDGE END DETAIL AND
ABUTMENT TYPICAL SECTION

SCALE: ½" = 1'-0"

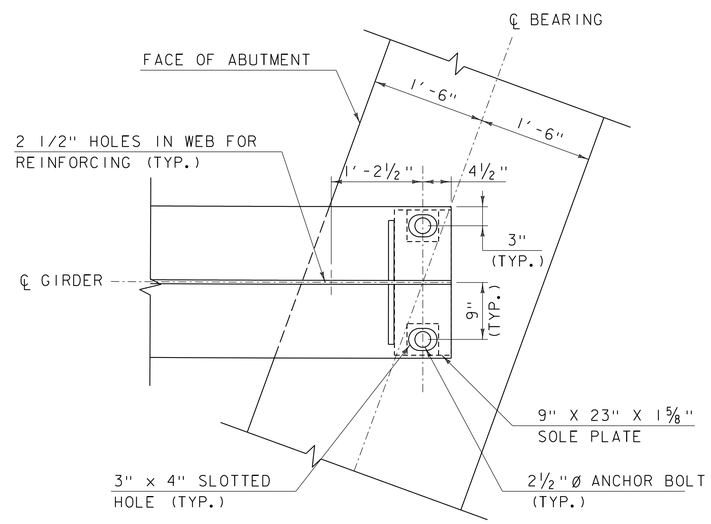

PLAN VIEW, END OF STEEL
AT ABUTMENT 2

REVERSE GIRDER FOR ABUTMENT 1
SCALE: 1" = 1'-0"

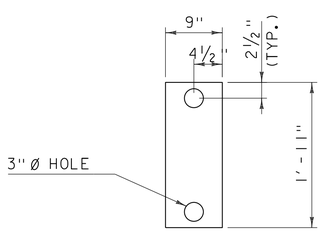

15/8" SOLE PLATE DETAIL

SCALE: 1" = 1'-0"

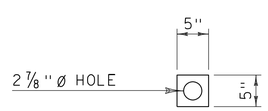

1/ 2" PLATE WASHER DETAIL

SCALE: 1" = 1'-0"

PROJECT NAME: STOWE	
PROJECT NUMBER: BRF 0235(15)	
FILE NAME: z88cl90sup.dgn	PLOT DATE: 3/9/2015
PROJECT LEADER: J. BYATT	DRAWN BY: M. SMITH
DESIGNED BY: J. FRENCH	CHECKED BY: J. BYATT
BEARING DETAILS	SHEET 41 OF 79

CONSULTING ENGINEERS

CLD 12-0120 MODEL: Bearing Details

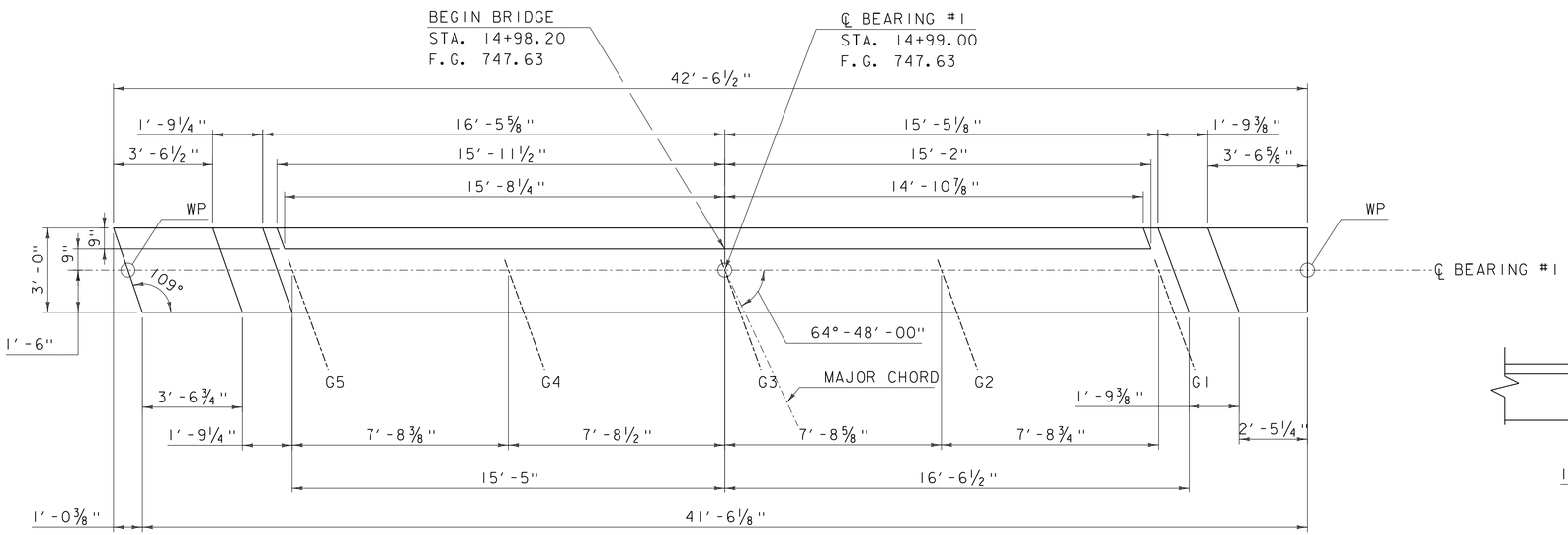

ABUTMENT #1 PLAN

SCALE: ⅜" = 1'-0"

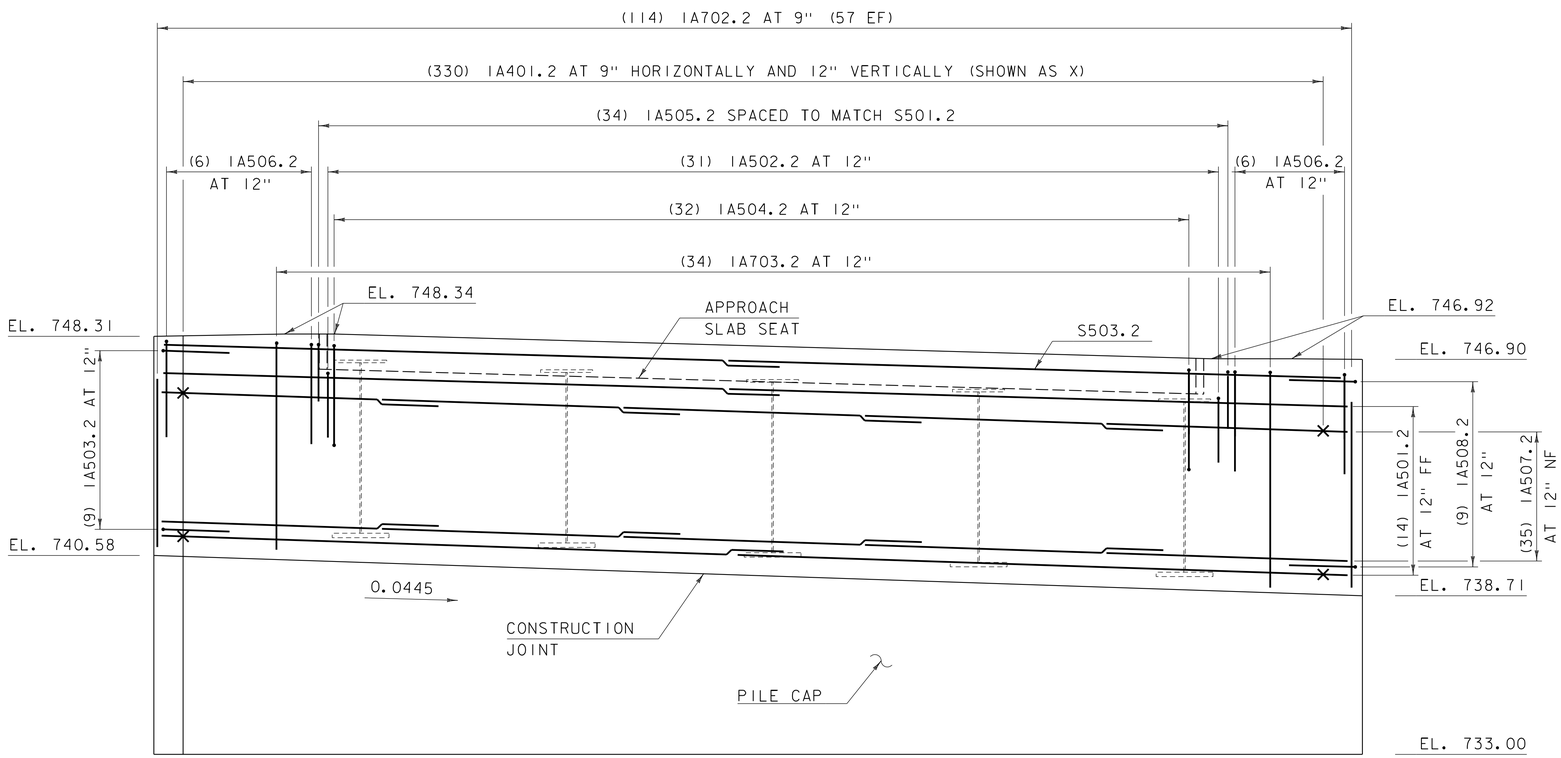

ABUTMENT #1 ELEVATION

SCALE: ⅜" = 1'-0"

NOTE: ELEVATIONS SHOWN ARE AT ℄ OF BEARING.

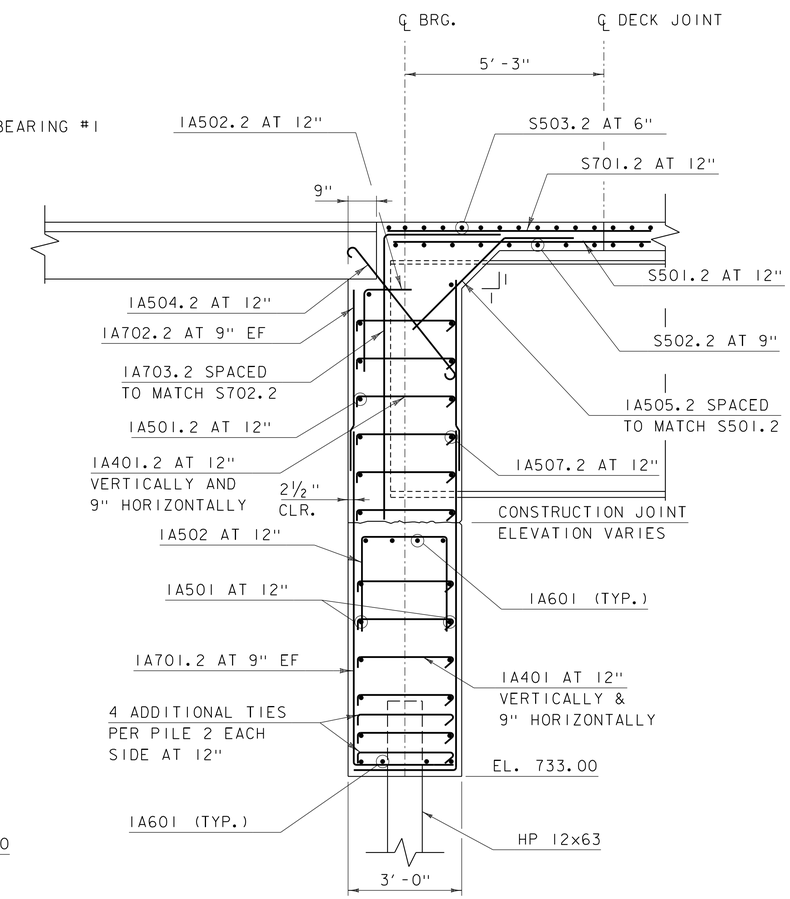

ABUTMENT #1 TYPICAL REBAR SECTION

SCALE: ½" = 1'-0"

NOTE:

NF = NEAR FACE
FF = FAR FACE
EF = EACH FACE
▲ = CUT TO FIT IN FIELD
X = LATERAL TIES
3" CLEAR, UNLESS OTHERWISE SPECIFIED ON THE PLANS.
2' - 2" BAR LAP UNLESS OTHERWISE SPECIFIED ON THE PLANS

PROJECT NAME: STOWE	
PROJECT NUMBER: BRF 0235(15)	
FILE NAME: z88c190sub.dgn	PLOT DATE: 3/9/2015
PROJECT LEADER: J. BYATT	DRAWN BY: M. SMITH
DESIGNED BY: J. FRENCH	CHECKED BY: J. BYATT
ABUTMENT 1 PLAN AND ELEVATION	SHEET 42 OF 79

CLD CONSULTING ENGINEERS

CLD 12-0120 MODEL: ABUTMENT 1

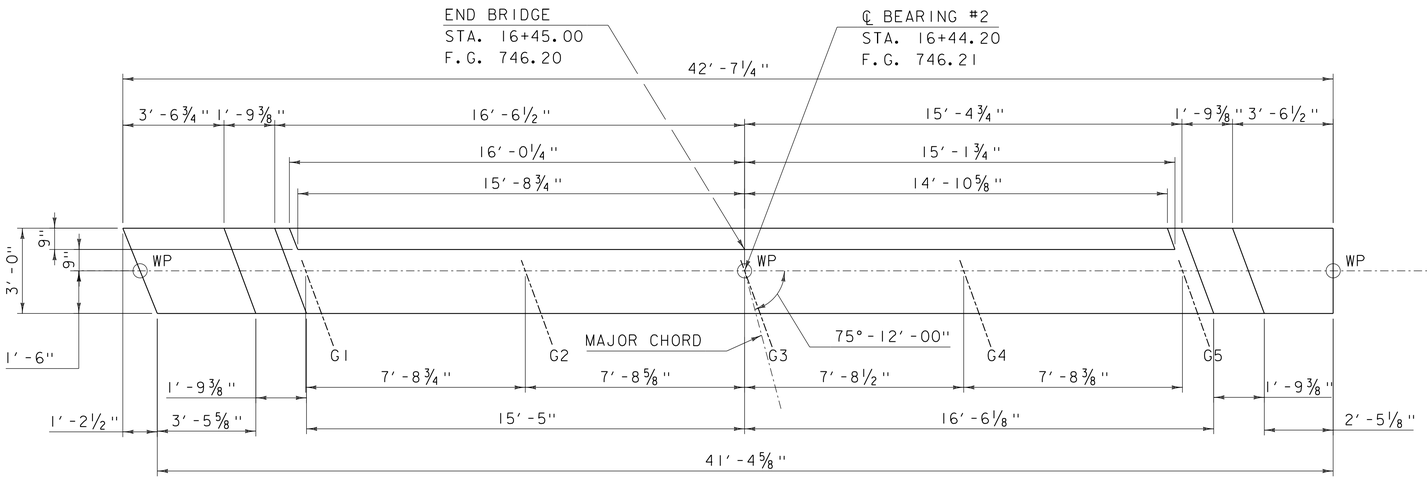

ABUTMENT #2 PLAN

SCALE: ⅜" = 1'-0"

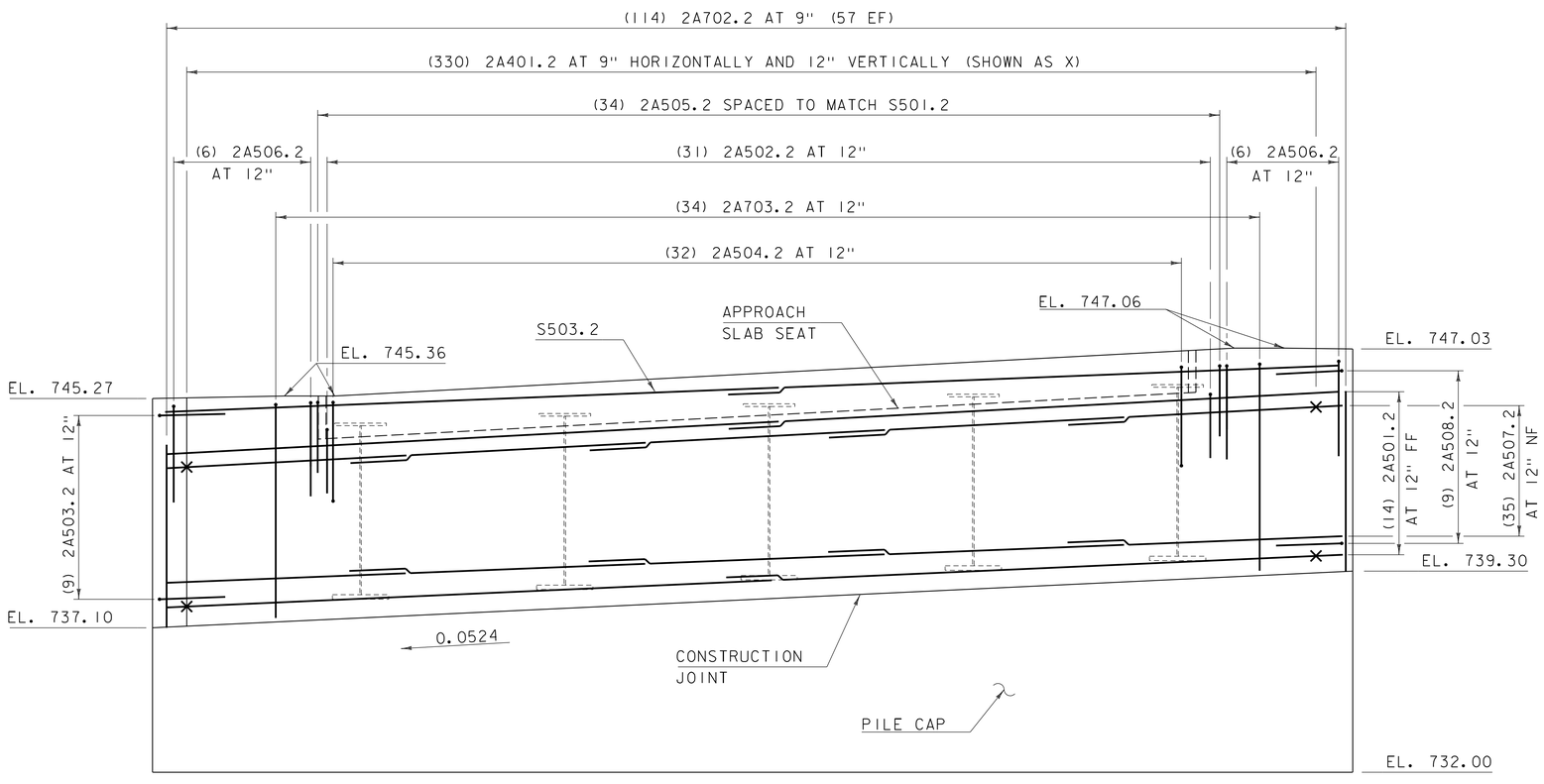

ABUTMENT #2 ELEVATION

SCALE: ⅜" = 1'-0"

NOTE: ELEVATIONS SHOWN ARE AT ℄ OF BEARING.

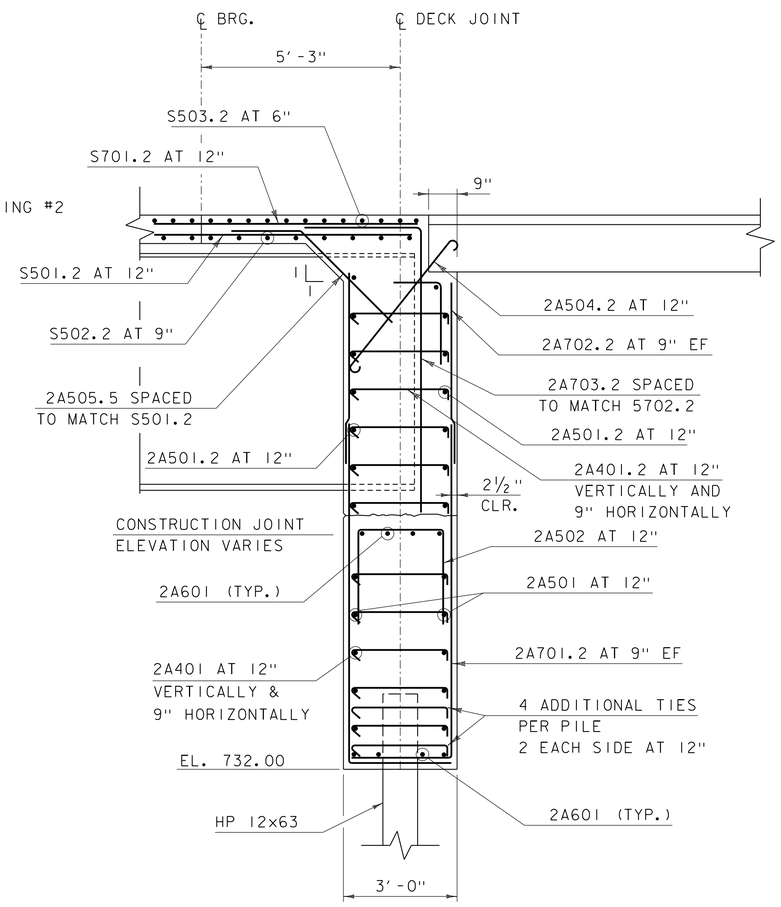

ABUTMENT #2 TYPICAL REBAR SECTION

SCALE: ½" = 1'-0"

NOTE:

NF = NEAR FACE
FF = FAR FACE
EF = EACH FACE
▲ = CUT TO FIT IN FIELD
X = LATERAL TIES
3" CLEAR, UNLESS OTHERWISE SPECIFIED ON THE PLANS.
2' - 2" BAR LAP UNLESS OTHERWISE SPECIFIED ON THE PLANS

PROJECT NAME: STOWE	
PROJECT NUMBER: BRF 0235(15)	
FILE NAME: z88c190sub.dgn	PLOT DATE: 3/9/2015
PROJECT LEADER: J. BYATT	DRAWN BY: M. SMITH
DESIGNED BY: J. FRENCH	CHECKED BY: J. BYATT
ABUTMENT 2 PLAN AND ELEVATION	SHEET 43 OF 79

CONSULTING ENGINEERS

CLD 12-0120 MODEL: ABUTMENT 2

NOTE:

SEE PROJECT NOTES FOR ADDITIONAL FABRICATION, CONSTRUCTION, AND SEQUENCE NOTES.

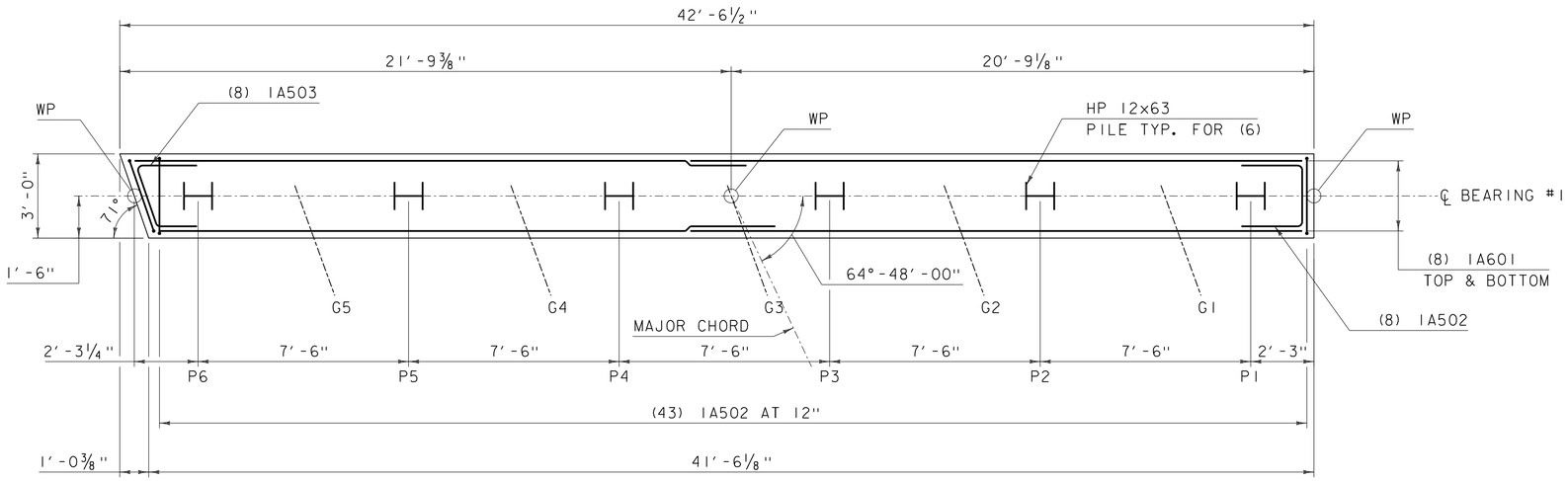

ABUTMENT #1 PILE CAP PLAN

SCALE: ⅜" = 1'-0"

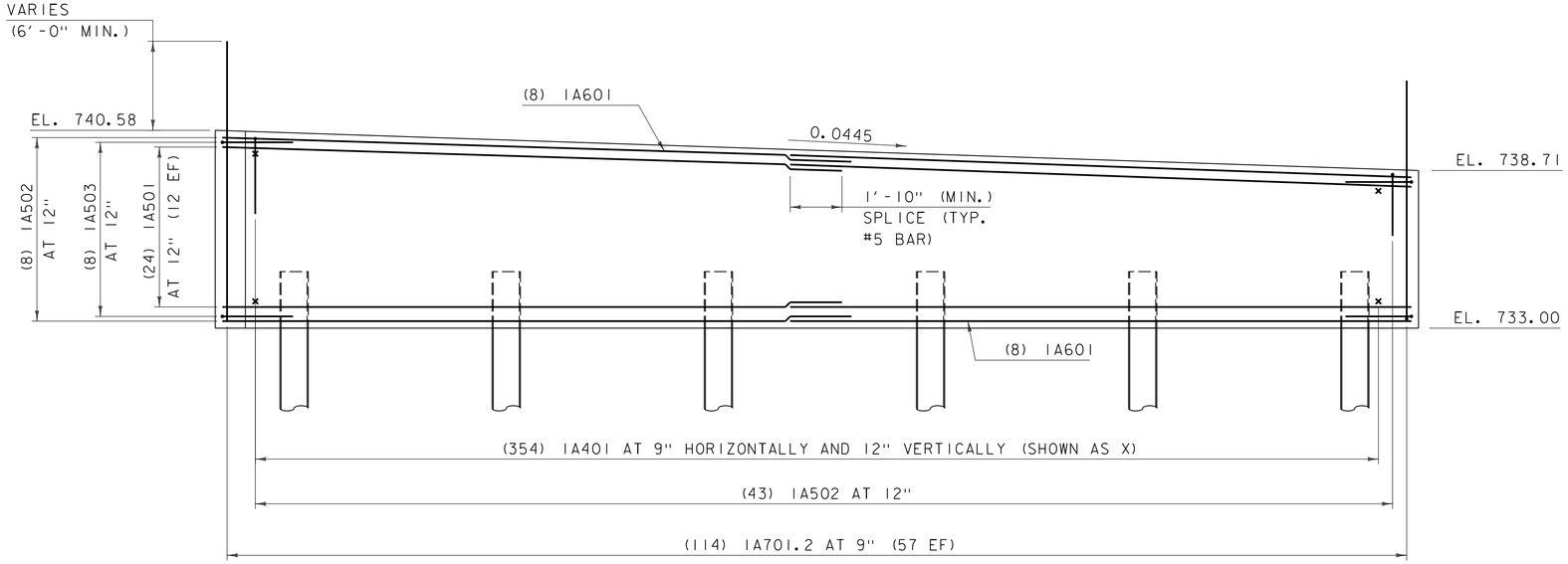

ABUTMENT #1 PILE CAP ELEVATION

SCALE: ⅜" = 1'-0"

NOTE:

NF = NEAR FACE
FF = FAR FACE
EF = EACH FACE
▲ = CUT TO FIT IN FIELD
3" CLEAR, UNLESS OTHERWISE SPECIFIED ON THE PLANS.
2' - 2" BAR LAP UNLESS OTHERWISE SPECIFIED ON THE PLANS
X = LATERAL TIE

PROJECT NAME: STOWE	
PROJECT NUMBER: BRF 0235(15)	
FILE NAME: z88c190sub.dgn	PLOT DATE: 3/9/2015
PROJECT LEADER: J. BYATT	DRAWN BY: M. SMITH
DESIGNED BY: J. FRENCH	CHECKED BY: J. BYATT
ABUTMENT 1 PILE CAP PLAN AND ELEVATION	SHEET 44 OF 79

CLD CONSULTING ENGINEERS

MODEL: PILE CAP 1

CLD 12-0120

NOTE:

SEE PROJECT NOTES FOR ADDITIONAL FABRICATION, CONSTRUCTION, AND SEQUENCE NOTES.

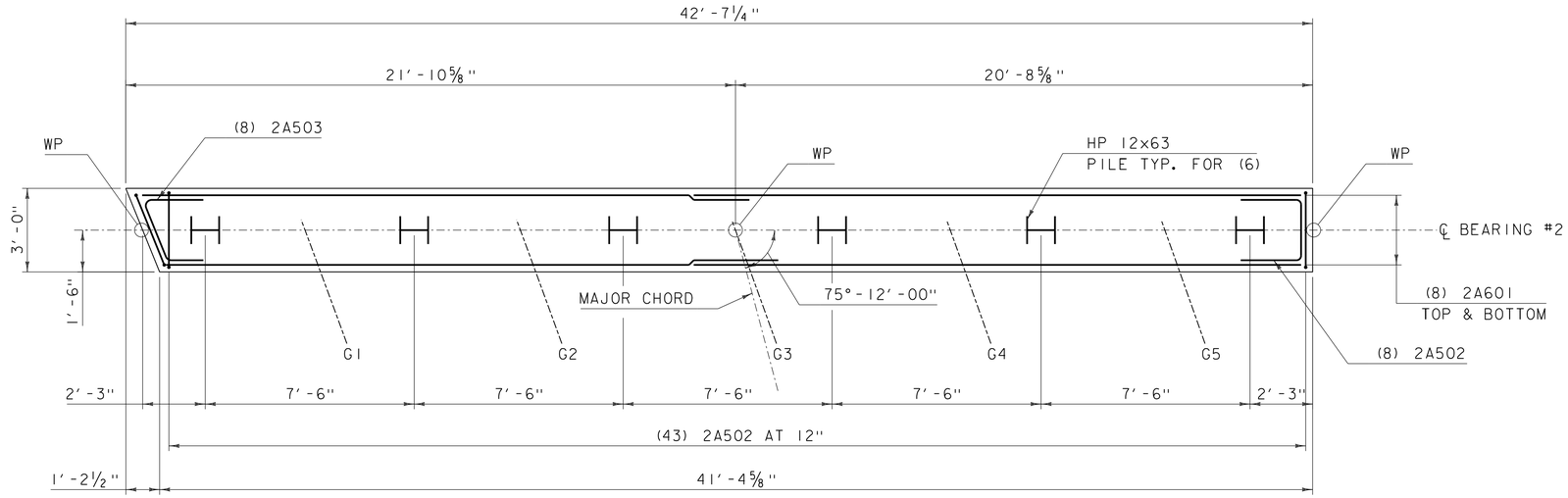

ABUTMENT #2 PILE CAP PLAN

SCALE: ⅜" = 1'-0"

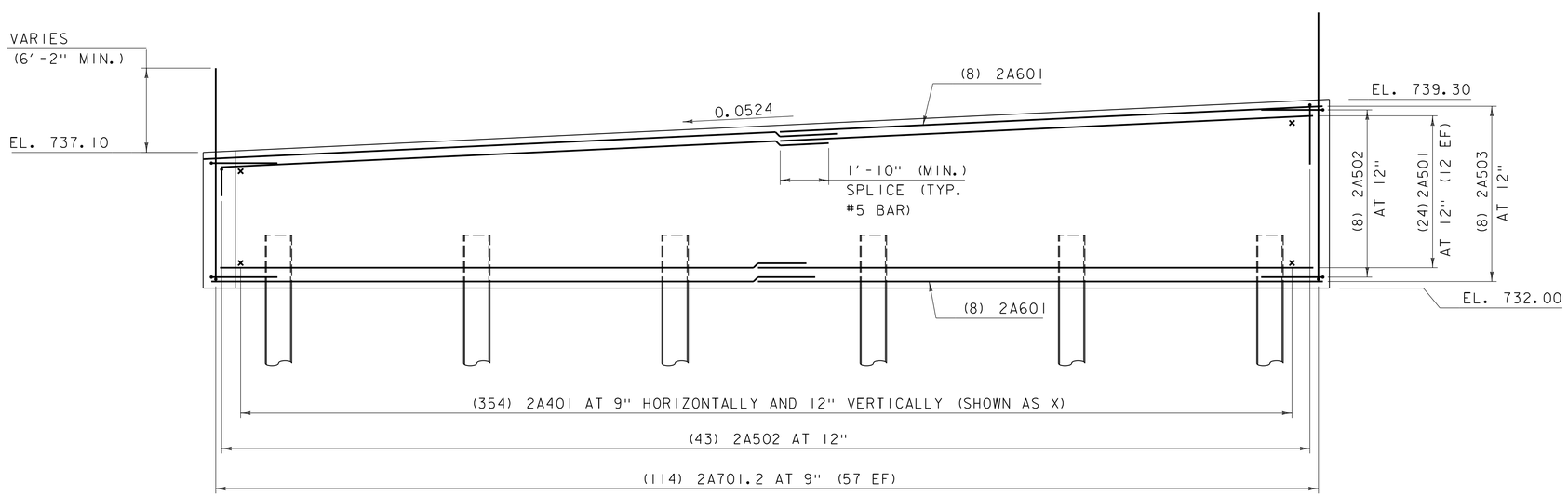

ABUTMENT #2 PILE CAP ELEVATION

SCALE: ⅜" = 1'-0"

NOTE:

NF = NEAR FACE
FF = FAR FACE
EF = EACH FACE
▲ = CUT TO FIT IN FIELD
3" CLEAR, UNLESS OTHERWISE SPECIFIED ON THE PLANS.
2' - 2" BAR LAP UNLESS OTHERWISE SPECIFIED ON THE PLANS
X = LATERAL TIE

PROJECT NAME: STOWE	
PROJECT NUMBER: BRF 0235(15)	
FILE NAME: z88cl90sub.dgn	PLOT DATE: 3/9/2015
PROJECT LEADER: J. BYATT	DRAWN BY: M. SMITH
DESIGNED BY: J. FRENCH	CHECKED BY: J. BYATT
ABUTMENT 2 PILE CAP PLAN AND ELEVATION	SHEET 45 OF 79

CLD CONSULTING ENGINEERS

CLD 12-0120 MODEL: PILE CAP 2

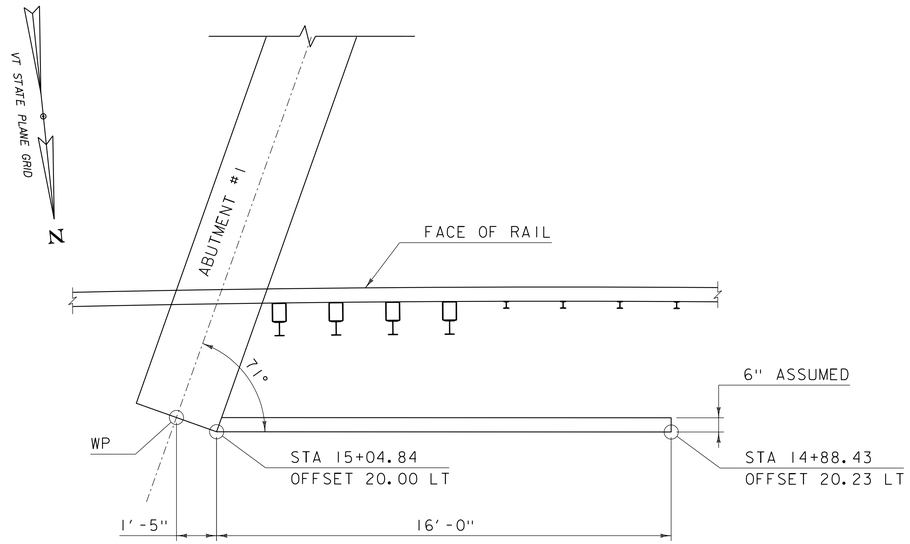

WINGWALL 1 PLAN VIEW

SCALE: 3/8" = 1'-0"

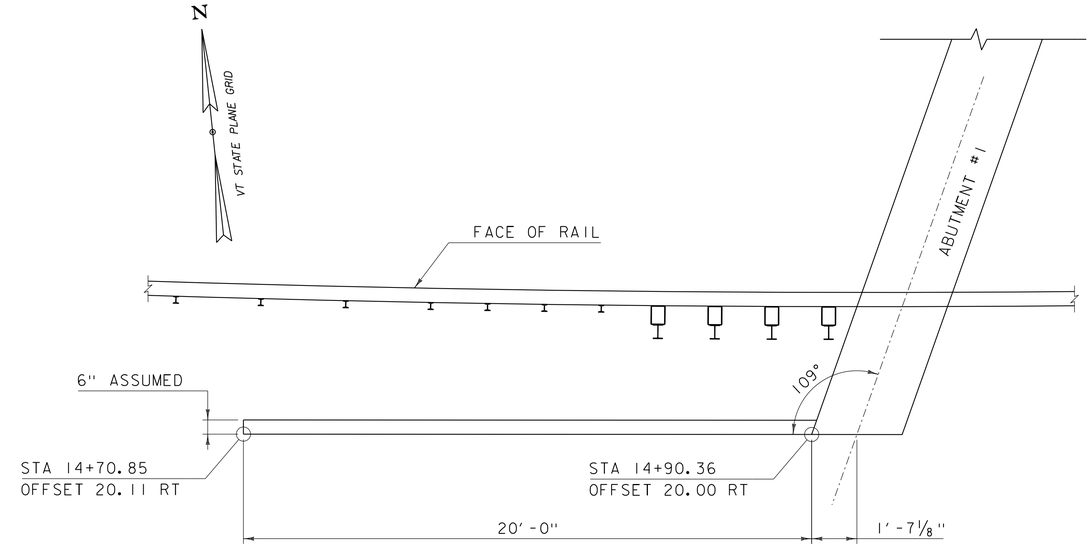

WINGWALL 2 PLAN VIEW

SCALE: 3/8" = 1'-0"

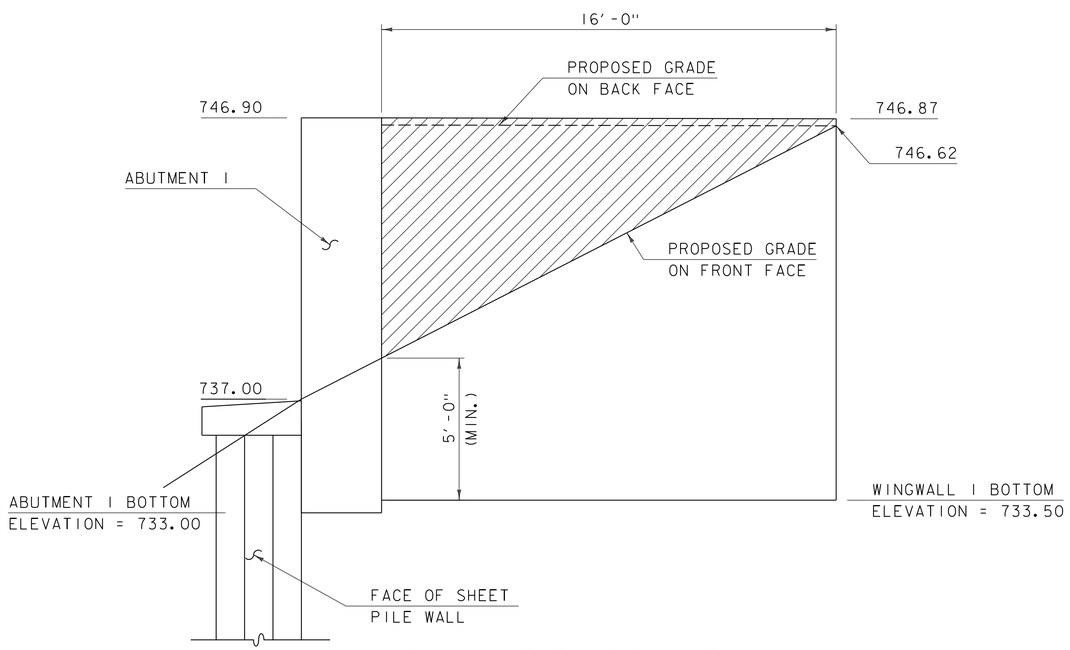

WINGWALL 1 ELEVATION VIEW

SCALE: 3/8" = 1'-0"

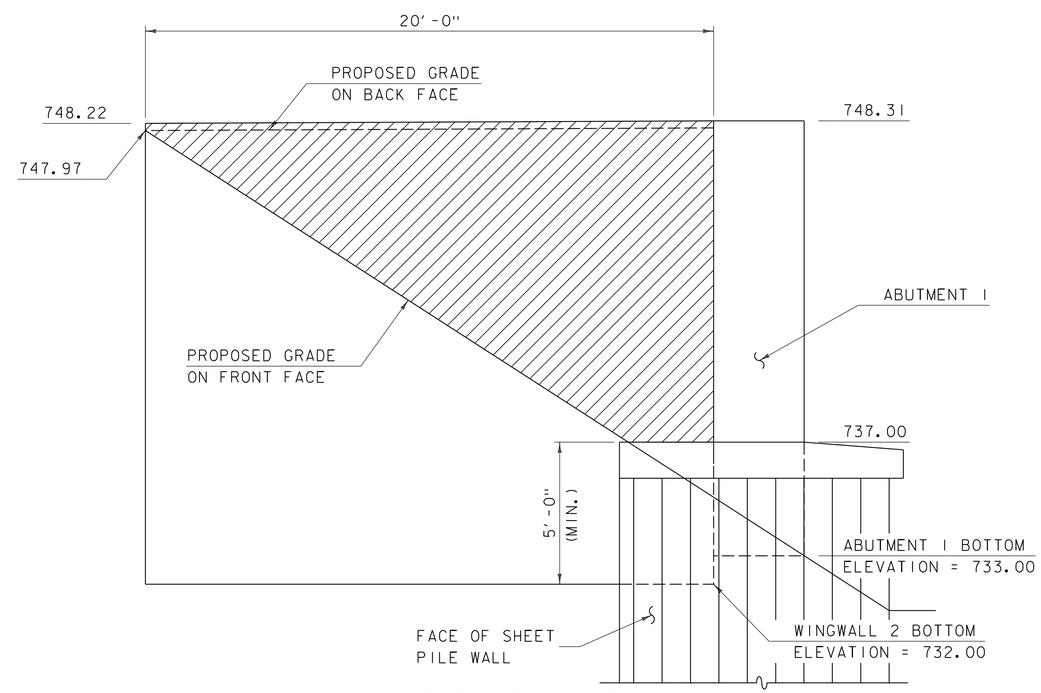

WINGWALL 2 ELEVATION VIEW

SCALE: 3/8" = 1'-0"

PAY LIMITS OF 900.670
"SPECIAL PROVISION
(RETAINING WALL)"

PROJECT NAME: STOWE	
PROJECT NUMBER: BRF 0235(15)	
FILE NAME: z88cl90sub.dgn	PLOT DATE: 3/9/2015
PROJECT LEADER: J. BYATT	DRAWN BY: M. SMITH
DESIGNED BY: J. FRENCH	CHECKED BY: J. BYATT
WINGWALL PLAN AND ELEVATION (1 OF 2)	SHEET 46 OF 79

CONSULTING ENGINEERS

CLD 12-0120 MODEL: WINGWALL 1 AND 2

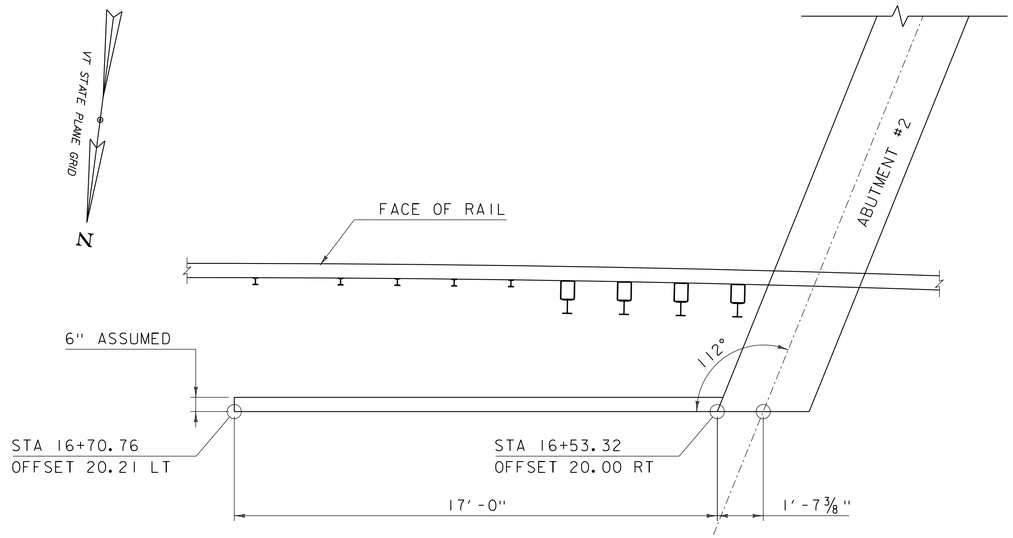

WINGWALL 3 PLAN VIEW

SCALE: 3/8" = 1'-0"

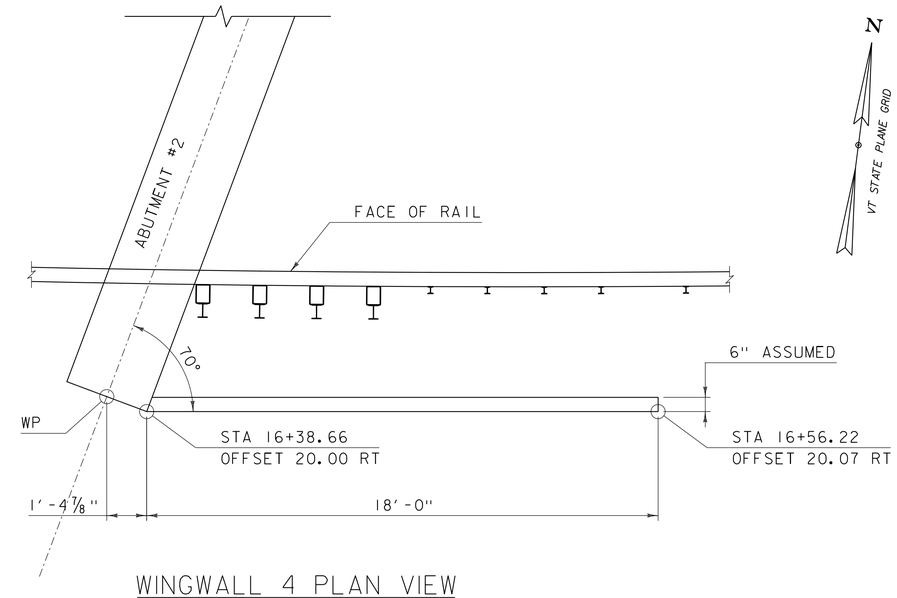

WINGWALL 4 PLAN VIEW

SCALE: 3/8" = 1'-0"

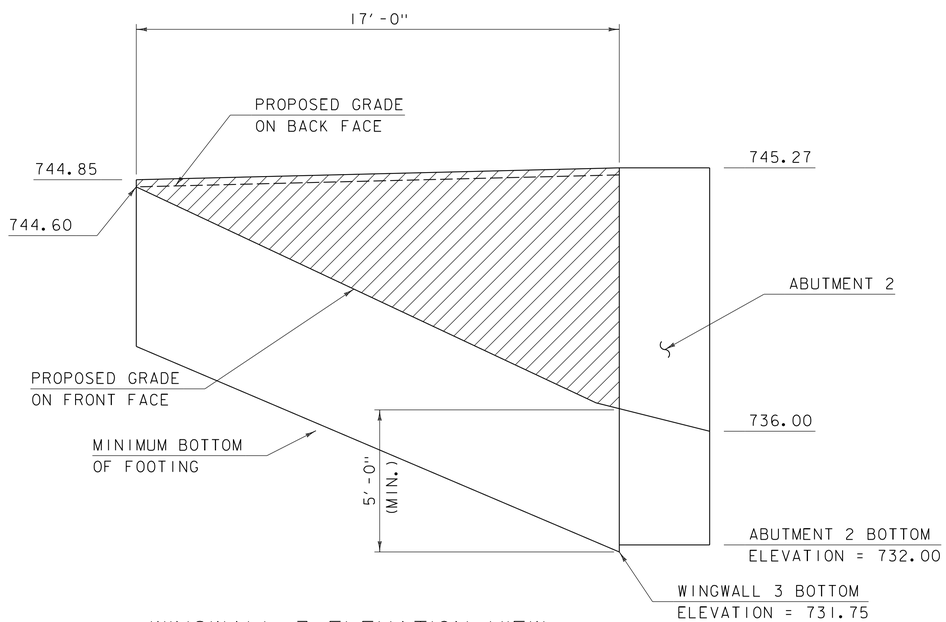

WINGWALL 3 ELEVATION VIEW

SCALE: 3/8" = 1'-0"

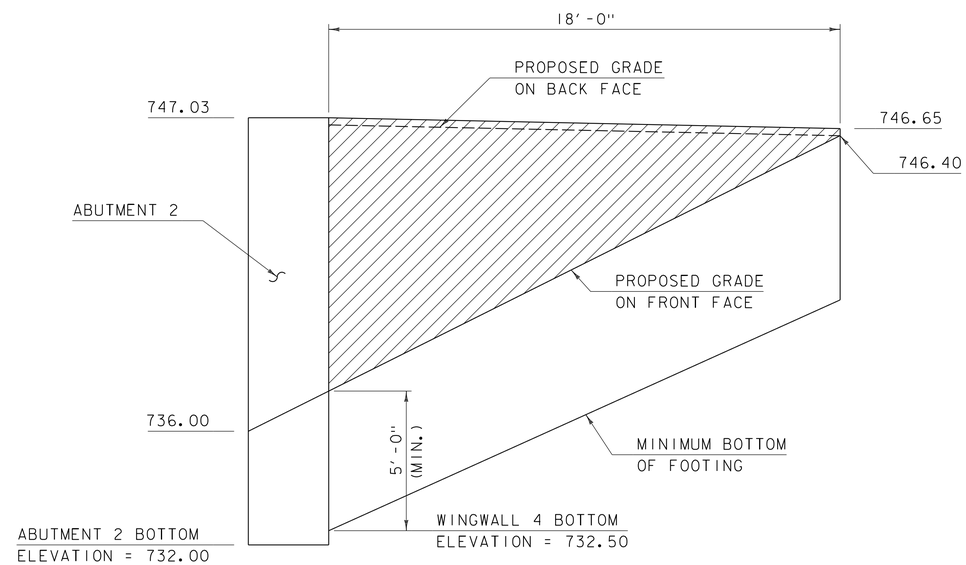

WINGWALL 4 ELEVATION VIEW

SCALE: 3/8" = 1'-0"

PAY LIMITS OF 900.670
"SPECIAL PROVISION
(RETAINING WALL)"

PROJECT NAME: STOWE	
PROJECT NUMBER: BRF 0235(15)	
FILE NAME: z88c190sub.dgn	PLOT DATE: 3/9/2015
PROJECT LEADER: J. BYATT	DRAWN BY: M. SMITH
DESIGNED BY: J. FRENCH	CHECKED BY: J. BYATT
WINGWALL PLAN AND ELEVATION (2 OF 2)	SHEET 47 OF 79

CONSULTING ENGINEERS

CLD 12-0120 MODEL: WINGWALL 3 AND 4

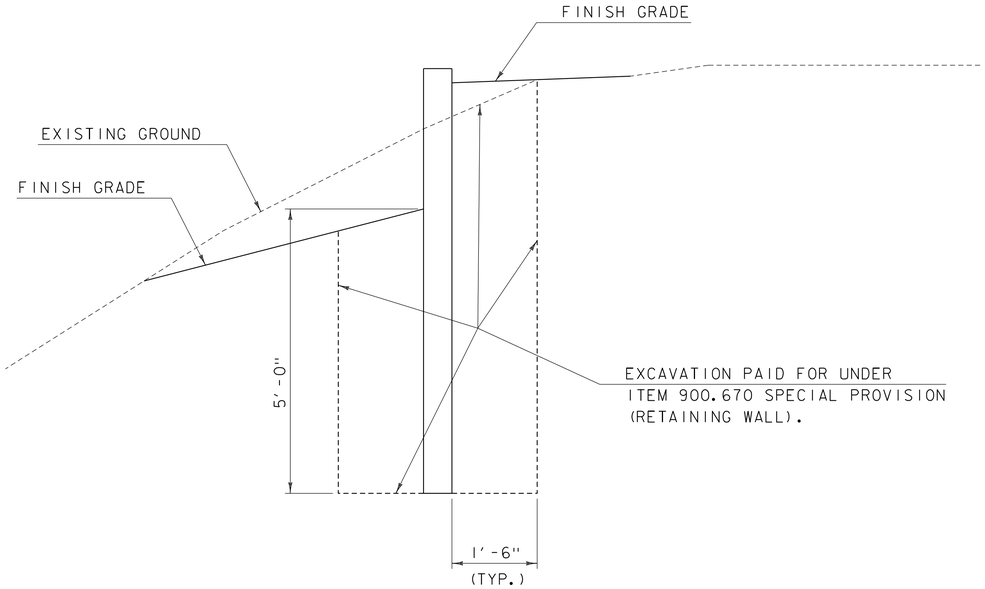

TYPICAL WINGWALL EXCAVATION DETAIL

SCALE: 3/8" = 1'-0"

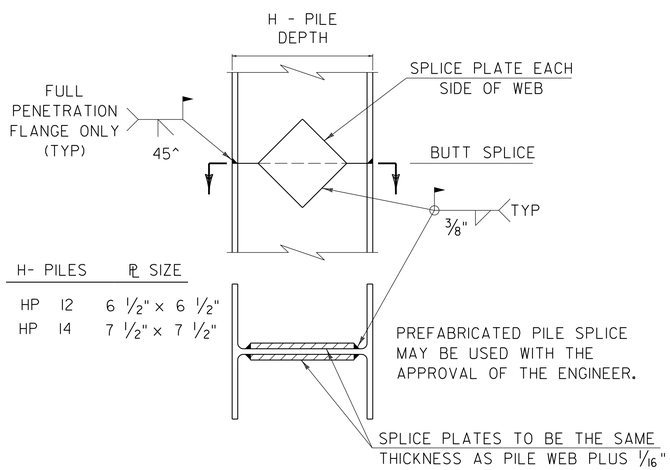

H- PILES		PL SIZE
HP	12	6 1/2" x 6 1/2"
HP	14	7 1/2" x 7 1/2"

DETAIL OF PILE SPLICE

SCALE: 3/8" = 1'-0"

NOTES:

1. ALL WINGWALLS SHALL BE SELECTED FROM THE LIST OF WALLS ON THE APPROVED RETAINING WALL DOCUMENT AVALABLE FROM VAOT MATERIALS & RESEARCH WEB SITE. THE RETAINING WALL SHALL HAVE CONCRETE FACING.

2. THE WALL SHALL BE PAID FOR UNDER ITEM 900.670 "SPECIAL PROVISION (RETAINING WALL)".

3. THE BOTTOM OF WALL SHALL BE A MINIMUM OF 5 FEET BELOW THE FINISH GRADE IN THE FRONT OF WALL.

4. THE WALL SHALL BE DESIGNED IN ACCORDANCE WITH 2012 AASHTO LRFD BRIDGE DESIGN SPECIFICATIONS AND ITS LATEST REVISIONS. THE DESIGN SHALL INCLUDE THE EFFECT OF ALL LOADS INCLUDING BUT NOT LIMITED TO LIVE LOAD, VEHICLE IMPACT ON ADJACENT GUARDRAIL AND POSTS, EARTH SURCHARGE, AND HYDROSTATIC PRESSURE.

5. THE TYPE OF WALL SELECTED SHALL BE COMPATIBLE WITH ADJACENT OBSTRUCTIONS SUCH AS GUARD RAIL POSTS. ANY CHANGES TO THE REINFORCING OR ANCHORING SYSTEM SHALL BE DETAILED IN THE FABRICATION DRAWINGS.

6. THE FOLLOWING SOIL PROPERTIES SHALL BE USED IN THE DESIGN OF THE WINGWALLS:

FOUNDATION SOIL DESIGN VALUES	
NOMINAL BEARING RESISTANCE:	13.5 KSF
FOUNDATION SOIL PARAMETERS	
UNIT WEIGHT:	115 PCF
FRICTION ANGLE:	34°
GRANULAR BACKFILL FOR STRUCTURES	
UNIT WEIGHT:	140 PCF
FRICTION ANGLE:	34°
ACTIVE EARTH PRESSURE COEFFICENT, Ka	0.28
BEARING RESISTANCE FACTORS (STRENGTH LIMIT STATE)	0.45
SLIDING RESISTANCE FACTORS	
MSEW:	1.0
GRAVITY/SEMI-GRAVITY (PROPRIETARY SYSTEM):	1.0
NON-GRAVITY CANTILEVERED AND ANCHORED:	0.8
GEOSYNTHETIC RESISTANCE FACTORS (IF APPLICABLE)	
TENSILE RESISTANCE OF GEOSYNTHETIC: REINFORCEMENT AND CONNECTORS	0.9
PULLOUT RESISTANCE OF TENSILE REINFORCEMENT:	0.9

7. THE INTERFACE BETWEEN THE WINGWALL AND THE ABUTMENT STEM SHALL BE DESIGNED TO ALLOW 0.74 INCHES OF MOVEMENT. A JOINT DETAIL SHALL BE SUBMITTED TO THE PROJECT MANAGER FOR REVIEW AND APPROVAL. ALL COMPONENTS SHALL BE INCLUDED IN THE UNIT PRICE FOR ITEM 900.670 SPECIAL PROVISION (RETAINING WALL).

8. WATER REPELLENT, SILANE, SHALL BE APPLIED TO ALL EXPOSED CONCRETE SURFACES TO 1' BELOW GRADE. PAYMENT SHALL BE INCIDENTAL TO CONTRACT ITEM 900.670.

CLD CONSULTING ENGINEERS

PROJECT NAME: STOWE	
PROJECT NUMBER: BRF 0235(15)	
FILE NAME: z88cl90sub.dgn	PLOT DATE: 3/9/2015
PROJECT LEADER: J. BYATT	DRAWN BY: M. SMITH
DESIGNED BY: J. FRENCH	CHECKED BY: J. BYATT
WINGWALL AND PILE DETAILS	SHEET 48 OF 79

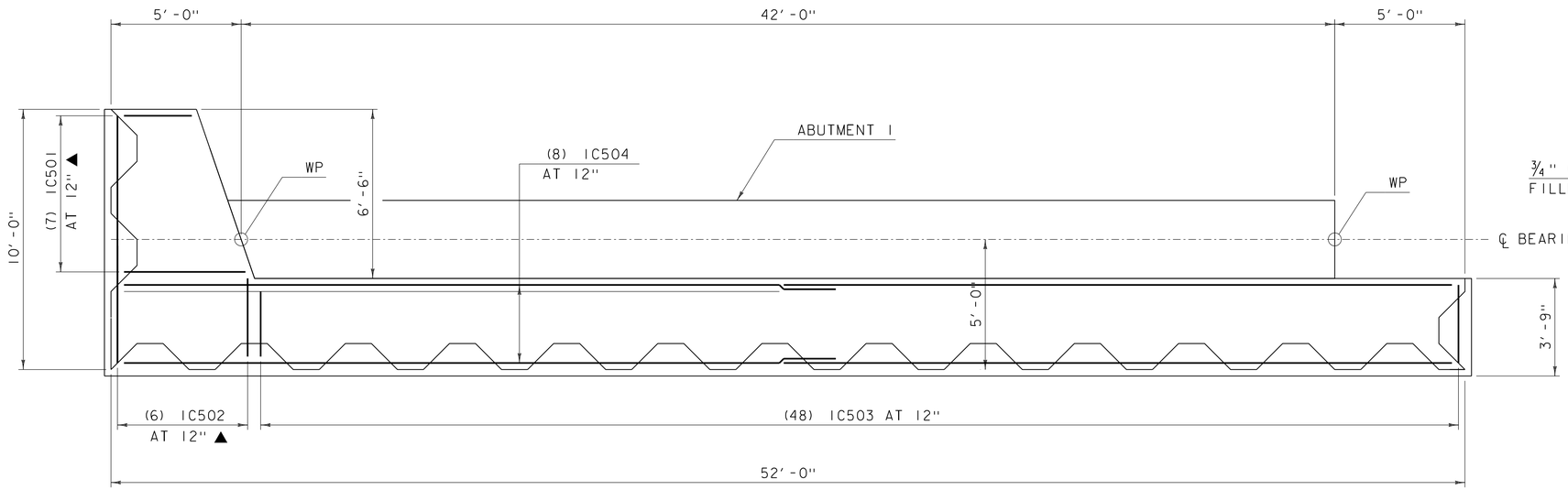

SHEET PILE RETAINING WALL PLAN

SCALE: 3/8" = 1'-0"

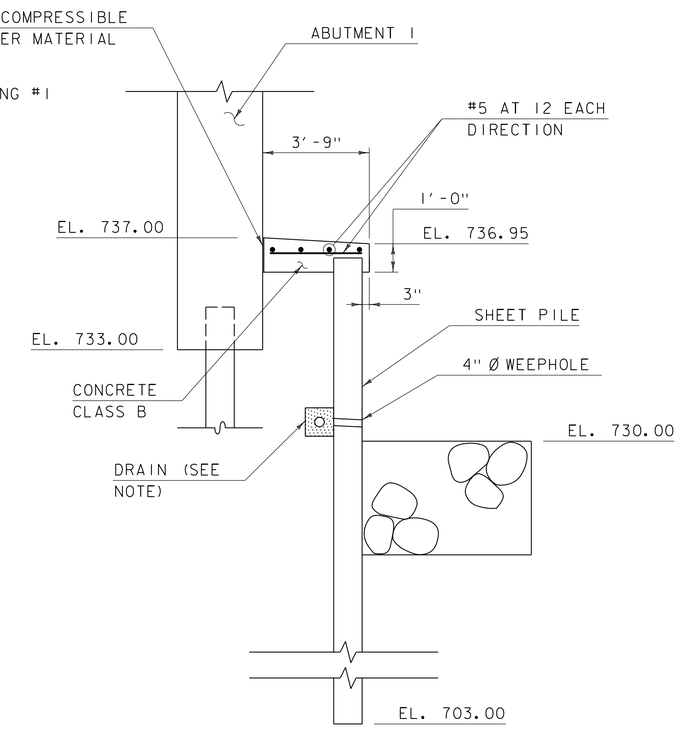

SECTION A-A
PERMANENT STEEL SHEET PILING WALL SECTION

SCALE: 3/8" = 1'-0"

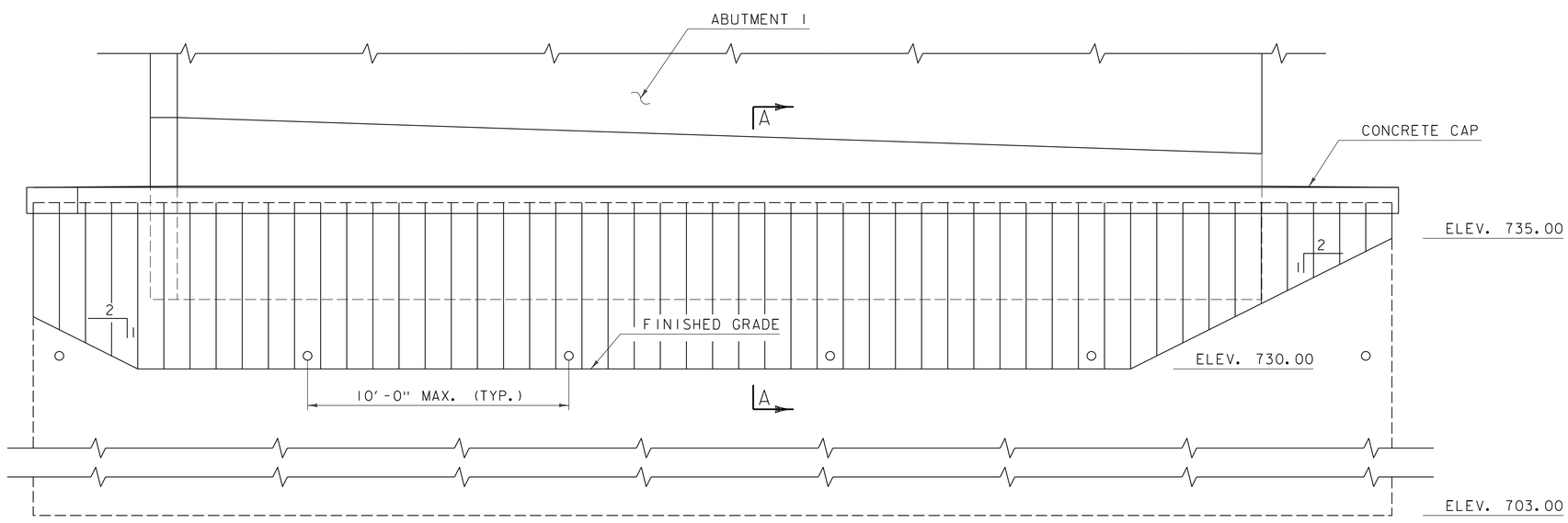

NOTE: SEE WINGWALL ELEVATIONS ON SHEET 46 FOR ADDITIONAL INFORMATION.

SHEET PILE RETAINING WALL ELEVATION

SCALE: 3/8" = 1'-0"

NOTES:

1. PAYMENT FOR PERMANENT STEEL SHEET PILING SHALL BE UNDER ITEM 505.35.
2. DRAIN SHALL CONSIST OF A 4" PERFORATED PIPE WITHIN A 12" ZONE OF 3/4" STONE WITH GEOTEXTILE. PAYMENT WILL BE INCIDENTAL TO ITEM 505.35.

CONSULTING ENGINEERS

PROJECT NAME: STOWE	
PROJECT NUMBER: BRF 0235(15)	
FILE NAME: z88cl90sub.dgn	PLOT DATE: 3/9/2015
PROJECT LEADER: J. BYATT	DRAWN BY: M. SMITH
DESIGNED BY: J. FRENCH	CHECKED BY: J. BYATT
SHEET PILE RETAINING WALL DETAILS	SHEET 49 OF 79

CLD 12-0120 MODEL: Sheet Pile Wall

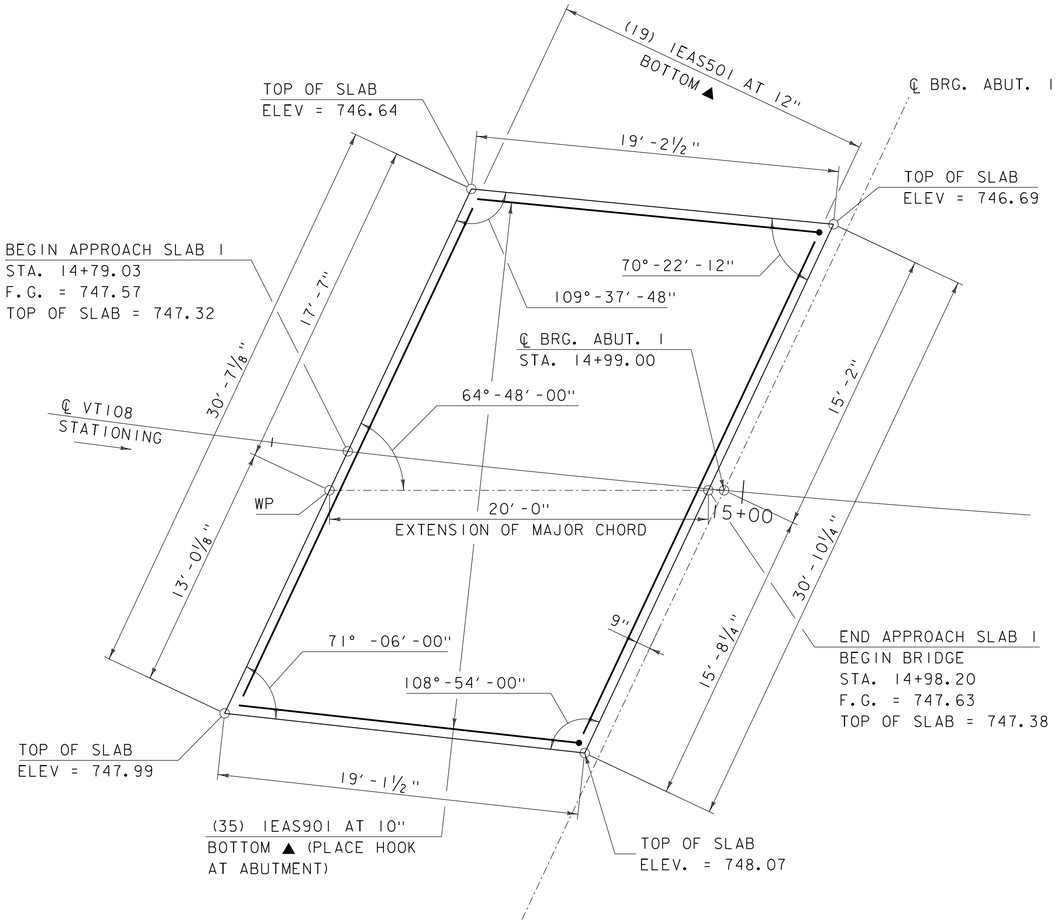

APPROACH SLAB 1 LAYOUT

SCALE: ¼" = 1'-0"

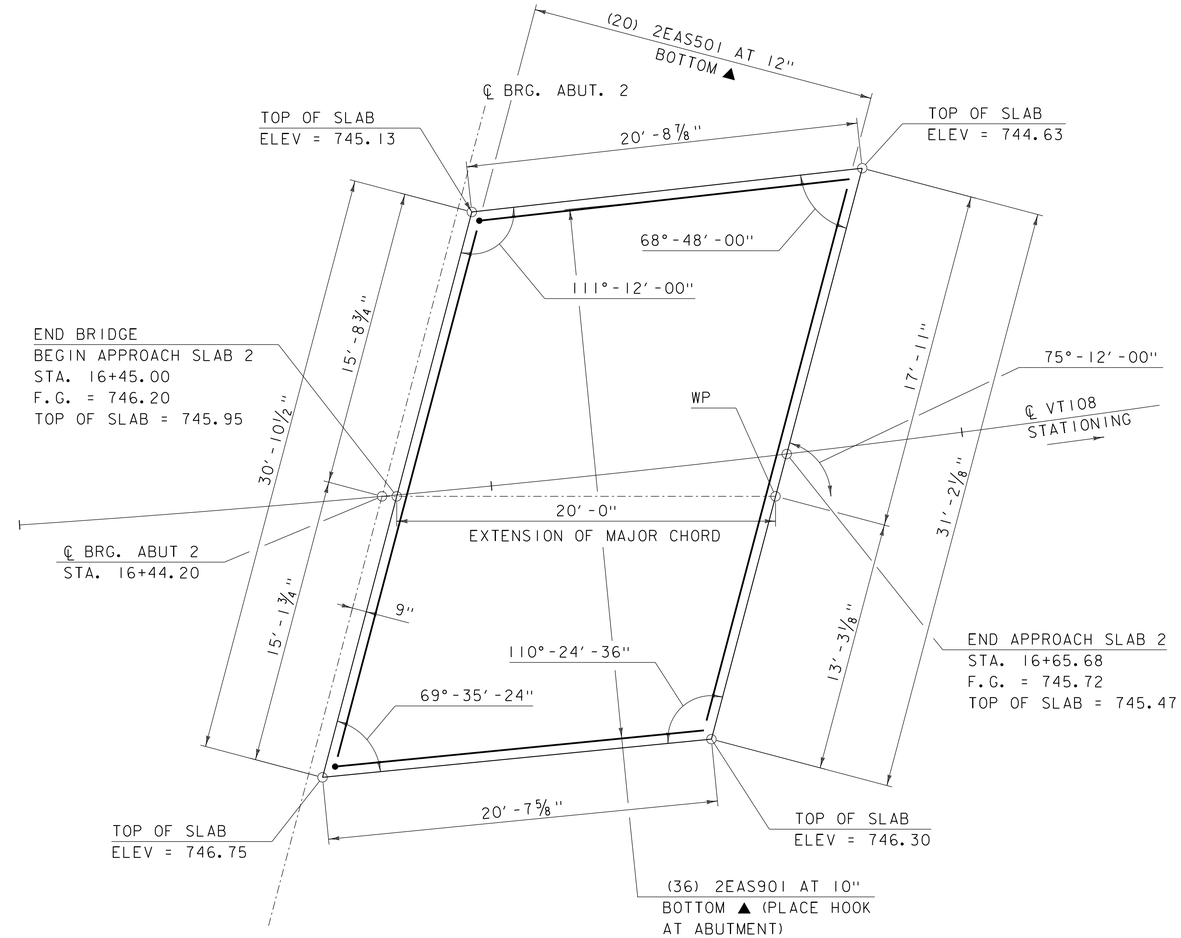

APPROACH SLAB 2 LAYOUT

SCALE: ¼" = 1'-0"

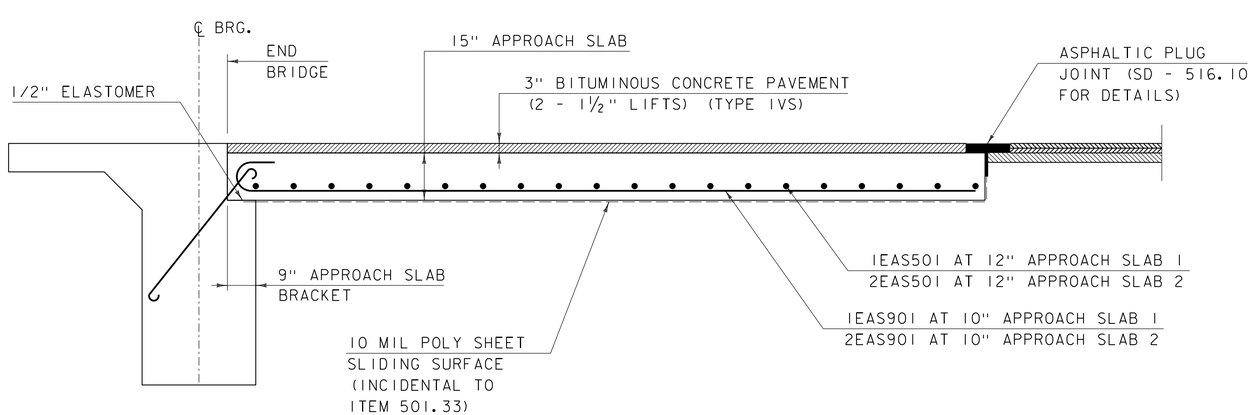

TYPICAL APPROACH SLAB

SCALE: ½" = 1'-0"

PROJECT NAME: STOWE	
PROJECT NUMBER: BRF 0235(15)	
FILE NAME: z88cl90sup.dgn	PLOT DATE: 3/9/2015
PROJECT LEADER: J. BYATT	DRAWN BY: M. SMITH
DESIGNED BY: J. FRENCH	CHECKED BY: J. BYATT
APPROACH SLAB DETAILS	SHEET 50 OF 79

CONSULTING ENGINEERS

CLD 12-0120 MODEL: Approach Slab

STATE OF VERMONT
AGENCY OF TRANSPORTATION

REINFORCING STEEL SCHEDULE

ITEM	EACH	SIZE	LENGTH	MARK	TYPE	A	B	C	D	E	F	G	H	J	K	R	O
	DECK																
	255	5	39'- 9"	S501.2	STR	39'- 9"											
✳ ▲	183	5	34'- 11"	S502.2	STR	34'- 11"											
✳ ▲	274	5	30'- 11"	S503.2	STR	30'- 11"											
	546	6	4'- 6"	S601.2	22		2'- 6"	2'- 0"	0'- 0"				0'- 2"	0'- 0"	2'- 6"	0'- 0"	
✳	69	7	20'- 0"	S701.2	STR	20'- 0"											
	ABUTMENT #1																
	354	4	3'- 7"	1A401	16	0'- 6"	2'- 7"	0'- 0"	0'- 6"				0'- 4"		0'- 4"		
✳	25	5	21'- 11"	1A501	STR	21'- 11"											
	51	5	6'- 11"	1A502	17		2'- 2"	2'- 7"	2'- 2"								
	8	5	7'- 1"	1A503	14	2'- 2"	0'- 0"	0'- 0"	2'- 9"	2'- 2"			0'- 10"		2'- 5"		
	16	6	22'- 2"	1A601	STR	22'- 2"											
	330	4	3'- 7"	1A401.2	16	0'- 6"	2'- 7"	0'- 0"	0'- 6"				0'- 4"		0'- 4"		
✳	15	5	22'- 2"	1A501.2	STR	22'- 2"											
	31	5	3'- 5"	1A502.2	17		2'- 2"	1'- 3"	0'- 0"								
	9	5	7'- 1"	1A503.2	14	2'- 2"	0'- 0"	0'- 0"	2'- 9"	2'- 2"			0'- 10"		2'- 5"		
	32	5	5'- 8"	1A504.2	1	0'- 11"	3'- 10"					0'- 11"		0'- 5"			
	34	5	6'- 0"	1A505.2	22		3'- 6"	2'- 6"	0'- 0"				2'- 6"		2'- 6"		
	12	5	9'- 7"	1A506.2	17		3'- 6"	2'- 7"	3'- 6"								
	35	5	10'- 0"	1A507.2	STR	10'- 0"											
	9	5	6'- 11"	1A508.2	17	6'- 11"											
	114	7	13'- 4"	1A701.2	17		2'- 7"	10'- 9"	0'- 0"								
	114	7	6'- 3"	1A702.2	STR	6'- 3"											
✳	35	7	11'- 0"	1A703.2	17		7'- 6"	3'- 6"	0'- 0"								
	ABUTMENT #2																
	354	4	3'- 7"	2A401	16	0'- 6"	2'- 7"	0'- 0"	0'- 6"				0'- 4"		0'- 4"		
	24	5	21'- 11"	2A501	STR	21'- 11"											
	51	5	6'- 11"	2A502	17		2'- 2"	2'- 7"	2'- 2"								
	8	5	7'- 1"	2A503	14	2'- 2"	0'- 0"	0'- 0"	2'- 9"	2'- 2"			0'- 11"		2'- 5"		
✳	17	6	22'- 2"	2A601	STR	22'- 2"											
	330	4	3'- 7"	2A401.2	16	0'- 6"	2'- 7"	0'- 0"	0'- 6"				0'- 4"		0'- 4"		
	14	5	22'- 2"	2A501.2	STR	22'- 2"											
	31	5	3'- 5"	2A502.2	17		2'- 2"	1'- 3"	0'- 0"								
	9	5	7'- 1"	2A503.2	14	2'- 2"	0'- 0"	0'- 0"	2'- 9"	2'- 2"			0'- 11"		2'- 5"		
	32	5	5'- 8"	2A504.2	1	0'- 11"	3'- 10"					0'- 11"		0'- 5"			
	34	5	6'- 0"	2A505.2	22		3'- 6"	2'- 6"	0'- 0"				2'- 6"		2'- 6"		
	12	5	9'- 7"	2A506.2	17		3'- 6"	2'- 7"	3'- 6"								
	35	5	10'- 0"	2A507.2	STR	10'- 0"											
	9	5	6'- 11"	2A508.2	17	6'- 11"											
	114	7	13'- 1"	2A701.2	17		2'- 7"	10'- 6"	0'- 0"								
	114	7	6'- 3"	2A702.2	STR	6'- 3"											
	34	7	11'- 0"	2A703.2	17		7'- 6"	3'- 6"	0'- 0"								
	APPROACH SLAB #1																
▲	19	5	30'- 4"	1EAS501	STR	30'- 4"											
✳ ▲	36	9	20'- 2"	1EAS901	1	1'- 6"	18'- 8"							0'- 11"			
	APPROACH SLAB #2																
▲	20	5	30'- 8"	2EAS501	STR	30'- 8"											
▲	36	9	21'- 8"	2EAS901	1	1'- 5"	20'- 3"							0'- 11"			
	SHEET PILE CONCRETE CAP																
▲	7	5	4'- 6"	1C501	STR	4'- 6"											
▲	6	5	9'- 6"	1C502	STR	9'- 6"											
	48	5	3'- 3"	1C503	STR	3'- 3"											
	8	5	27'- 1"	1C504	STR	27'- 1"											

~ NOTES ~

1. UNLESS OTHERWISE DESIGNATED, ALL BAR REINFORCEMENT FOR CONCRETE IN SIZES UP TO AND INCLUDING NO. 18 SHALL CONFORM TO THE REQUIREMENTS OF THE "SPECIFICATIONS FOR DEFORMED BILLET-STEEL BARS FOR CONCRETE REINFORCEMENT", AASHTO M 31 (ASTM A 615-SI). ALL BARS SHALL BE GRADE 60, UNLESS OTHERWISE DESIGNATED.
2. FOR TYPICAL BENDING DETAILS, RECOMMENDED PIN DIAMETER "D" OF BENDS AND HOOKS, AND OTHER STANDARD PRACTICE, SEE CURRENT CONCRETE REINFORCING STEEL INSTITUTE "MANUAL OF STANDARD PRACTICE".
3. BARS WHICH REQUIRE MORE ACCURATE BENDING THAN STANDARD PRACTICES SHOULD HAVE LIMITS INDICATED.
4. ALL DIMENSIONS ARE OUT TO OUT OF BAR EXCEPT "A" AND "G" ON STANDARD 180 DEGREE AND 135 DEGREE HOOKS.
5. "J" DIMENSION ON 180 DEGREE HOOKS TO BE SHOWN ONLY WHERE NECESSARY TO RESTRICT HOOK SIZE. OTHERWISE, STANDARD HOOKS ARE TO BE USED.
6. "H" DIMENSION ON STIRRUPS TO BE SHOWN ONLY WHEN NECESSARY TO MAINTAIN CLEARANCES.
7. WHERE SLOPE DIFFERS FROM 45 DEGREES, DIMENSIONS "H" AND "K" MUST BE SHOWN.
8. ▲ DENOTES BARS TO BE CUT IN FIELD.
9. ✳ DENOTES ONE EXTRA BAR ADDED FOR TESTING PURPOSES.
10. △ DENOTES TWO EXTRA BARS ADDED FOR TESTING PURPOSES.
11. E IN BAR MARK PREFIX DENOTES EPOXY COATED REINFORCING STEEL.

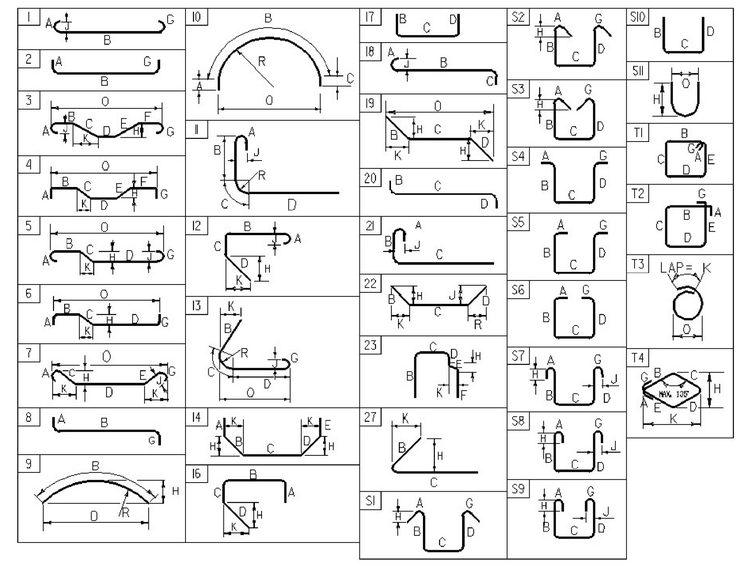

ASTM STANDARD REINFORCING BARS

BAR SIZE DESIGNATION	WEIGHT POUNDS PER FOOT	NOMINAL DIMENSIONS ROUND SECTION		
		DIAMETER INCHES	AREA INCHES ^{2}	PERIMETER INCHES
#3	0.376	0.375	0.11	1.178
#4	0.668	0.500	0.20	1.571
#5	1.043	0.625	0.31	1.963
#6	1.502	0.750	0.44	2.356
#7	2.044	0.875	0.60	2.749
#8	2.670	1.000	0.79	3.142
#9	3.400	1.128	1.00	3.544
#10	4.303	1.270	1.27	3.990
#11	5.313	1.410	1.56	4.430
#14	7.65	1.693	2.25	5.32
#18	13.60	2.257	4.00	7.09

PROJECT NAME: **STOWE**
PROJECT NUMBER: **BRF 0235(15)**

FILE NAME: z88c190schedule.dgn
PROJECT MANAGER: **J. BYATT**
DESIGNED BY: **A. GIRALDI**
REINFORCING STEEL SCHEDULE SHEET

PLOT DATE: **4/9/2014**
DRAWN BY: **M. SMITH**
CHECKED BY: **J. FRENCH**
SHEET 51 OF 79

MODEL: Schedule
CLD 12-0120

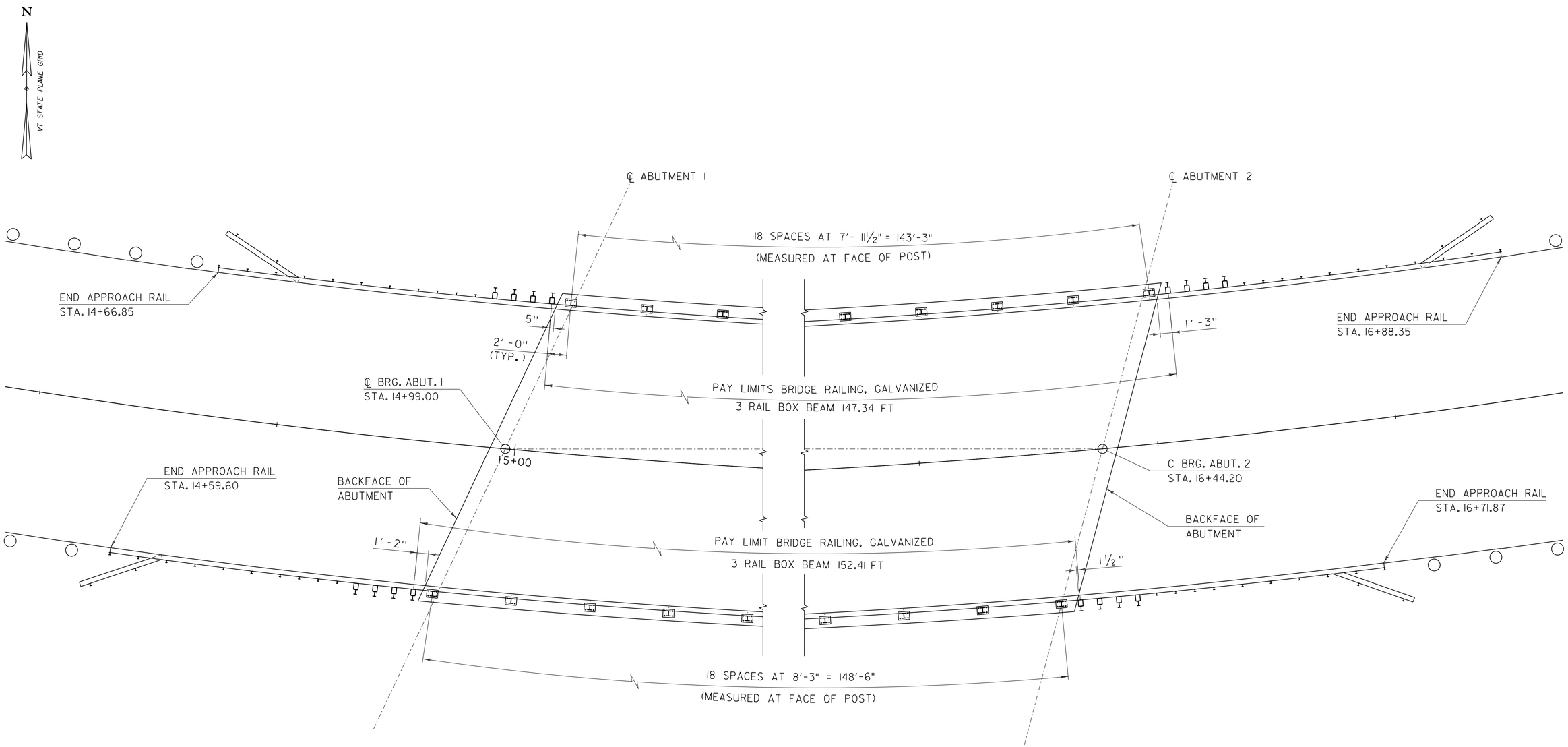

BRIDGE RAIL LAYOUT

SCALE: 3/16" = 1'-0"

PROJECT NAME: STOWE	
PROJECT NUMBER: BRF 0235(15)	
FILE NAME: z88c190rail.dgn	PLOT DATE: 3/9/2015
PROJECT LEADER: J. BYATT	DRAWN BY: M. SMITH
DESIGNED BY: J. FRENCH	CHECKED BY: J. BYATT
BRIDGE RAIL LAYOUT	SHEET 52 OF 79

CONSULTING ENGINEERS

CLD 12-0120 MODEL: RailLayout

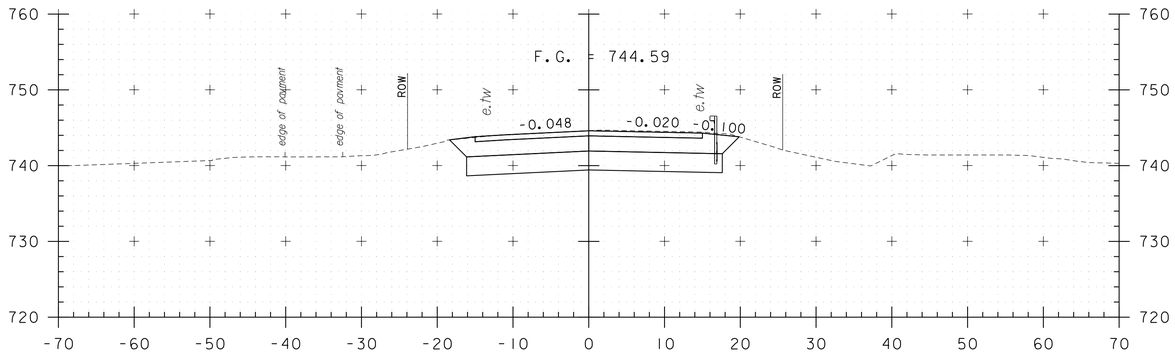

11+00
END APPROACH
BEGIN PROJECT

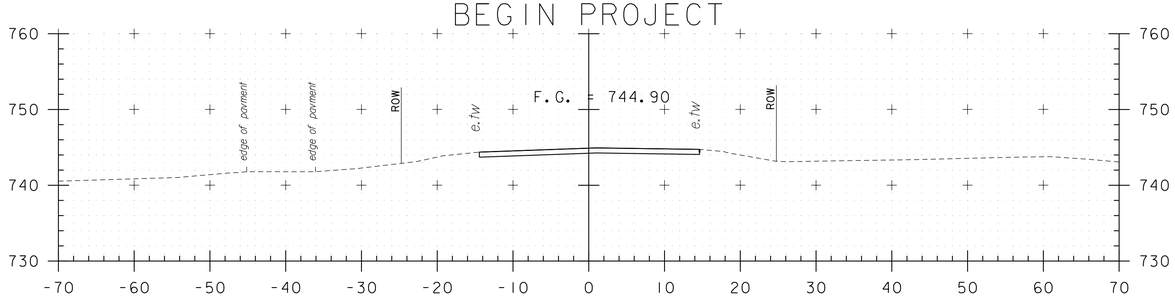

10+50

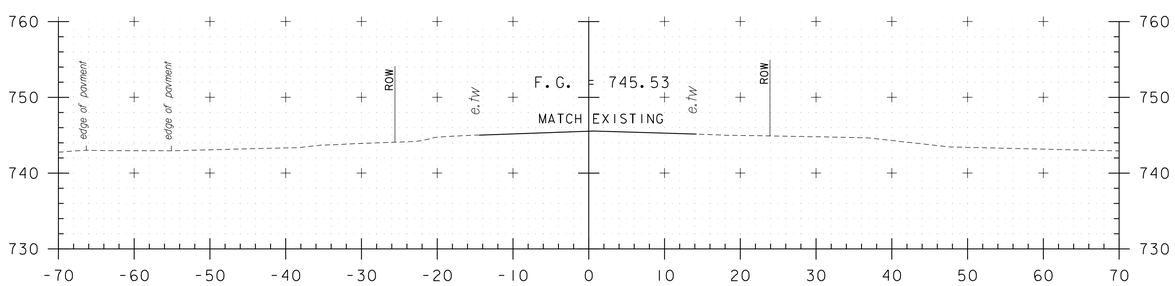

10+00
BEGIN APPROACH

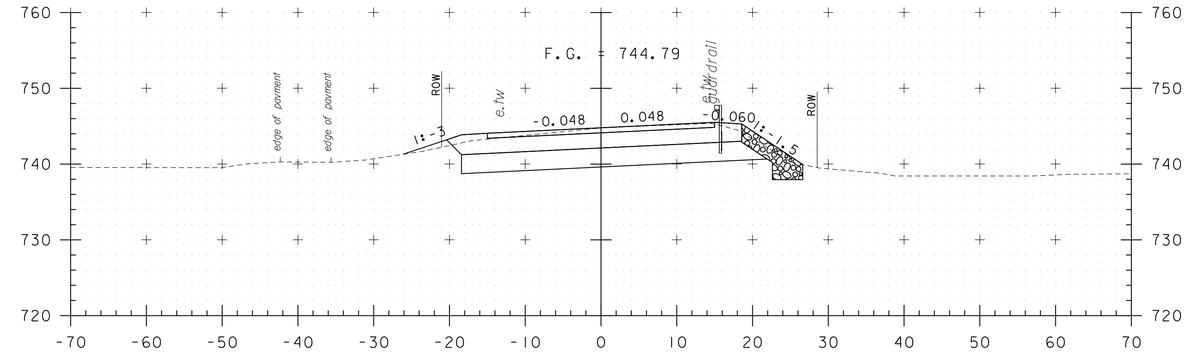

12+50

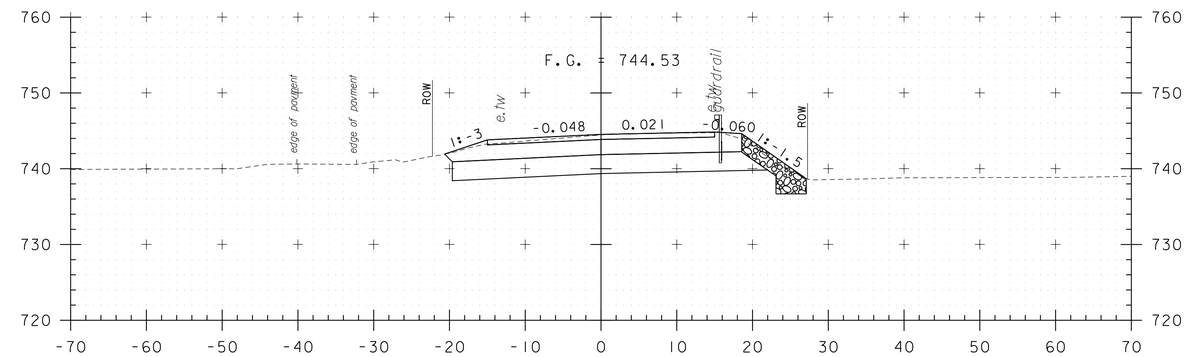

12+00

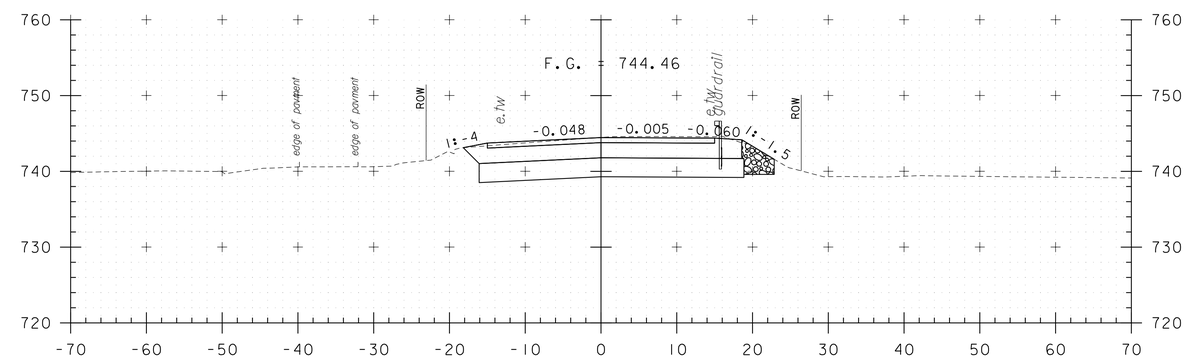

11+50

STA. 10+00 TO STA. 12+50

PROJECT NAME: STOWE	
PROJECT NUMBER: BRF 0235(15)	
FILE NAME: z88c190xsl.dgn	PLOT DATE: 3/9/2015
PROJECT LEADER: J. BYATT	DRAWN BY: K. RUTTER
DESIGNED BY: K. RUTTER	CHECKED BY: C. GREGORY
VT 108 CROSS SECTIONS	SHEET 53 OF 79

CLD CONSULTING ENGINEERS

MODEL: VT108 XS 1

CLD 12-0120

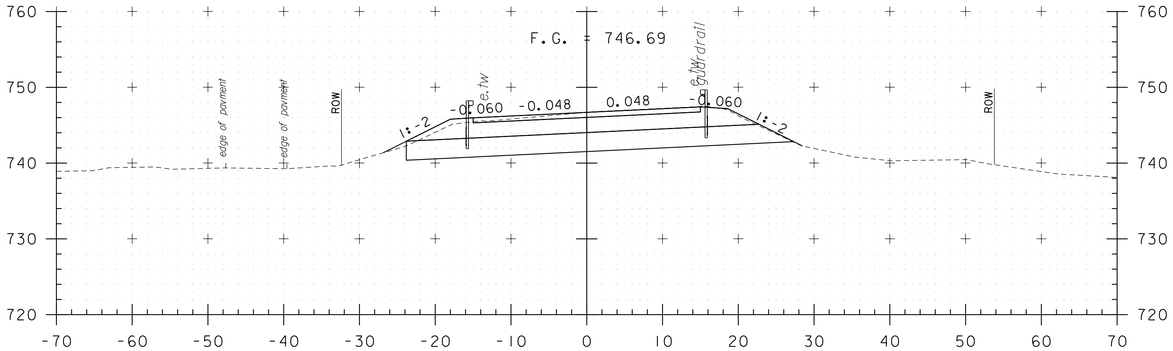

14+00

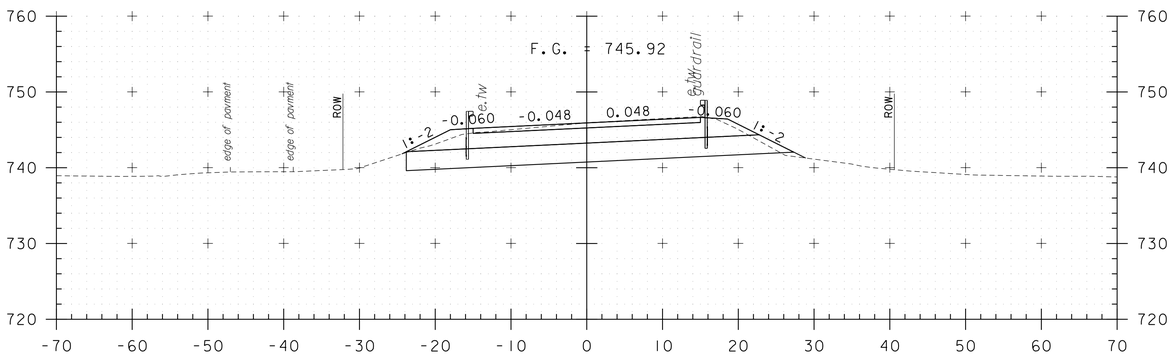

13+50

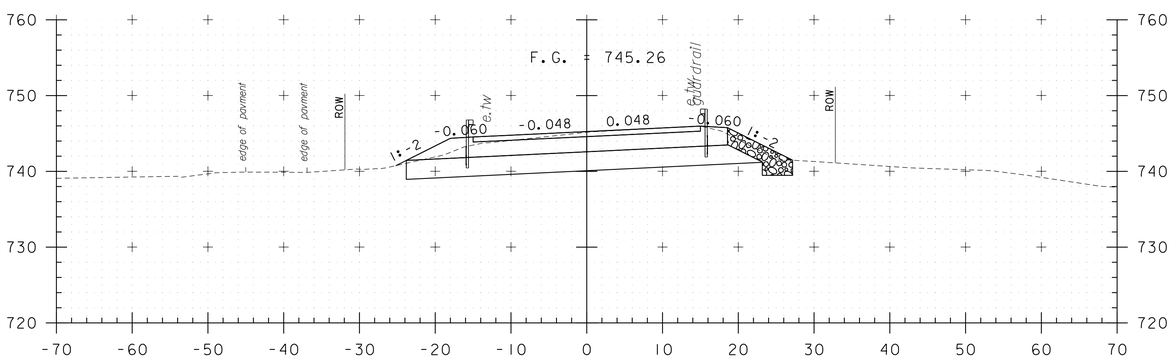

13+00

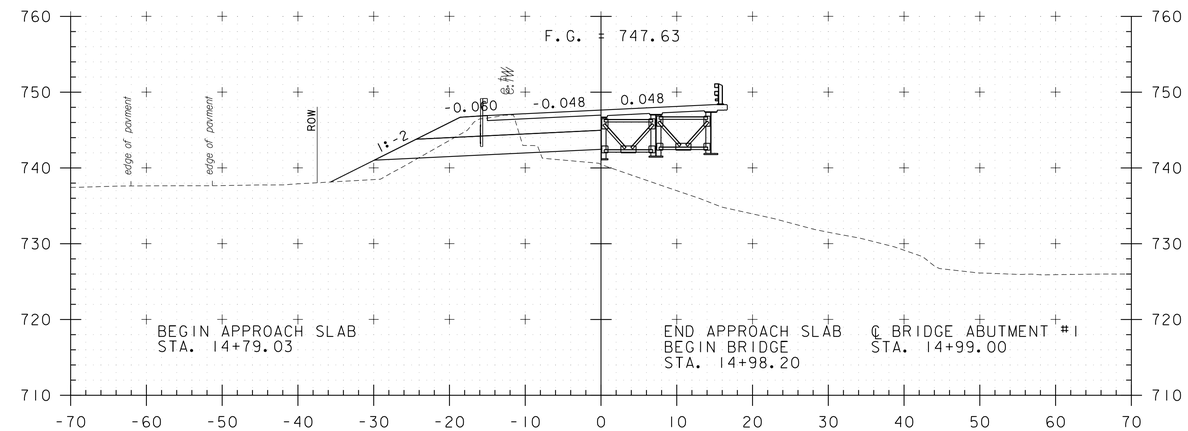

15+00

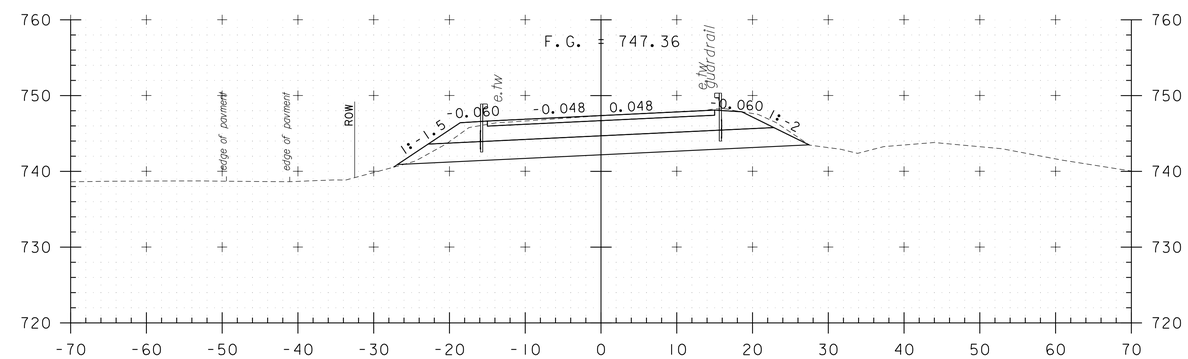

14+50

STA. 13+00 TO STA. 15+00

PROJECT NAME: STOWE	
PROJECT NUMBER: BRF 0235(15)	
FILE NAME: z88cl90xsl.dgn	PLOT DATE: 3/9/2015
PROJECT LEADER: J. BYATT	DRAWN BY: K. RUTTER
DESIGNED BY: K. RUTTER	CHECKED BY: C. GREGORY
VT 108 CROSS SECTIONS	SHEET 54 OF 79

CONSULTING ENGINEERS

CLD 12-0120 MODEL: VT108 XS 2

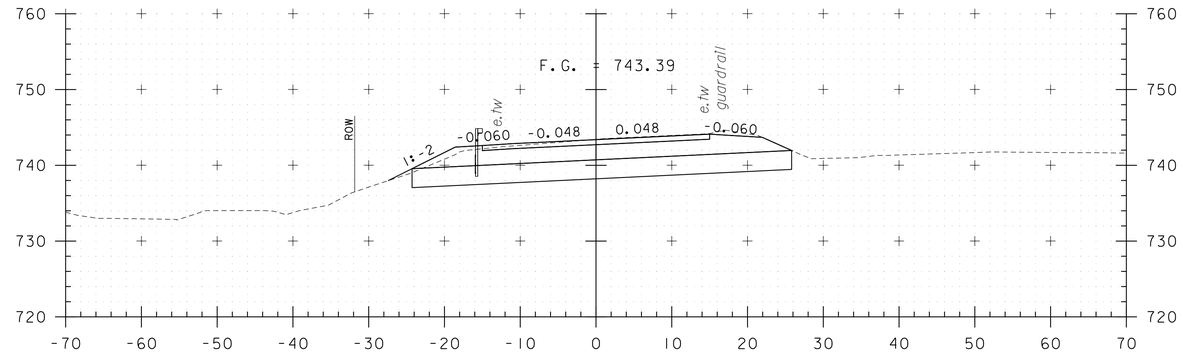

17+50

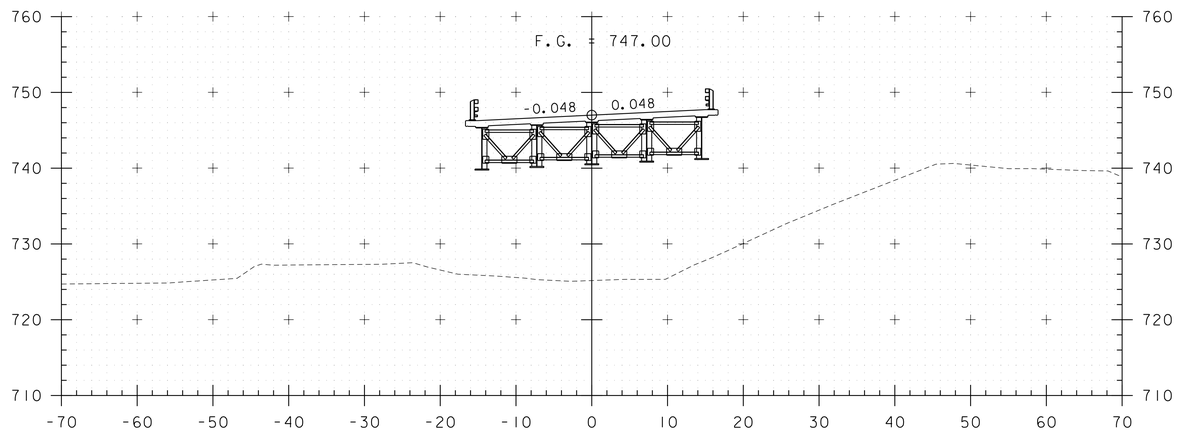

16+00

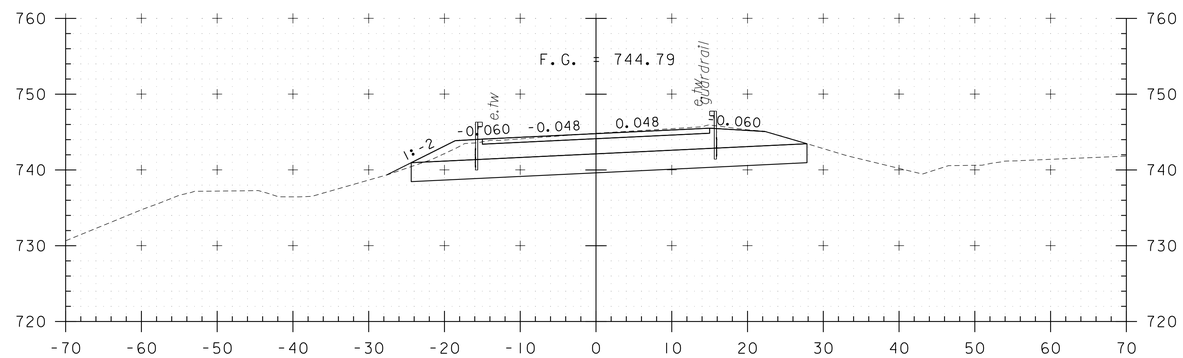

17+00

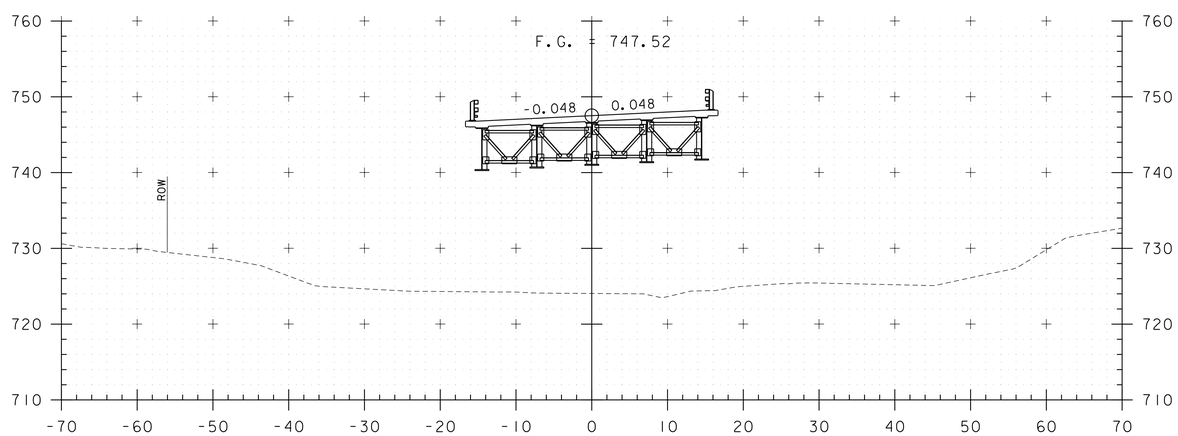

15+50

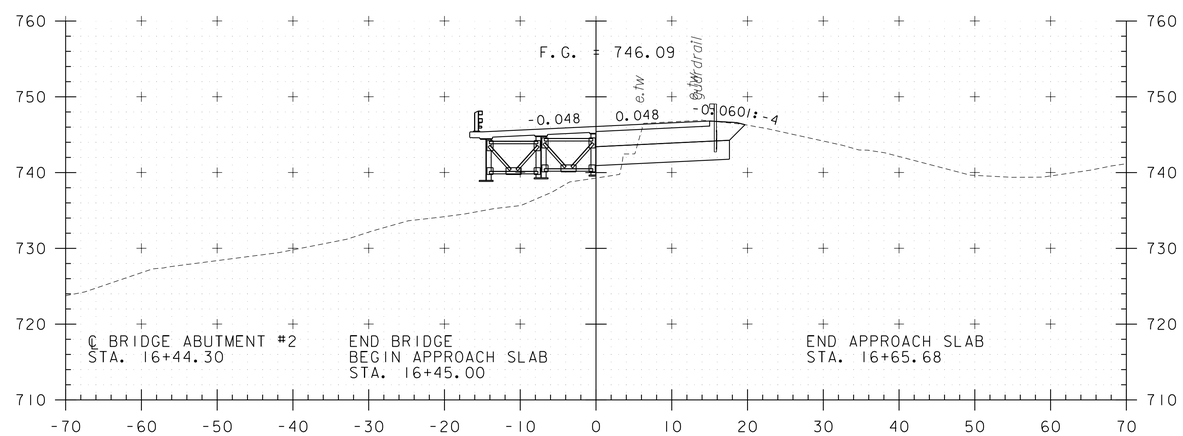

16+50

STA. 15+50 TO STA. 17+50

PROJECT NAME: STOWE	
PROJECT NUMBER: BRF 0235(15)	
FILE NAME: z88c190xsl.dgn	PLOT DATE: 3/9/2015
PROJECT LEADER: J. BYATT	DRAWN BY: K. RUTTER
DESIGNED BY: K. RUTTER	CHECKED BY: C. GREGORY
VT 108 CROSS SECTIONS	SHEET 55 OF 79

CONSULTING ENGINEERS

CLD 12-0120 MODEL: VT108 XS 3

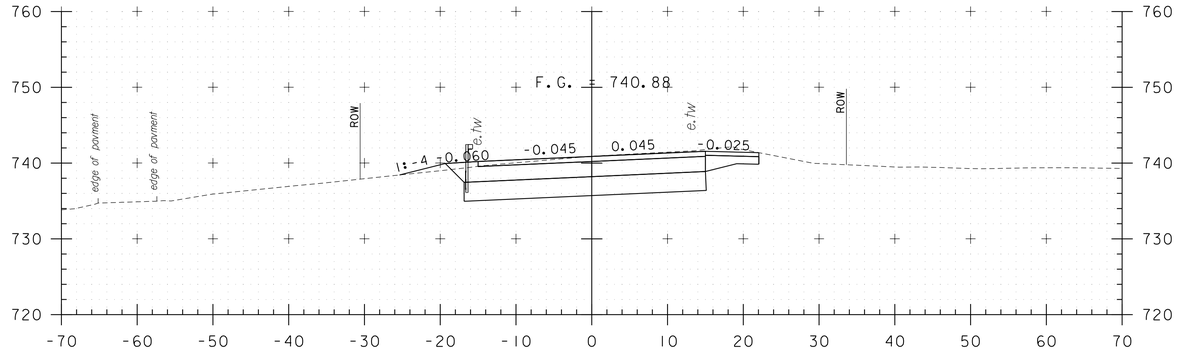

19+00

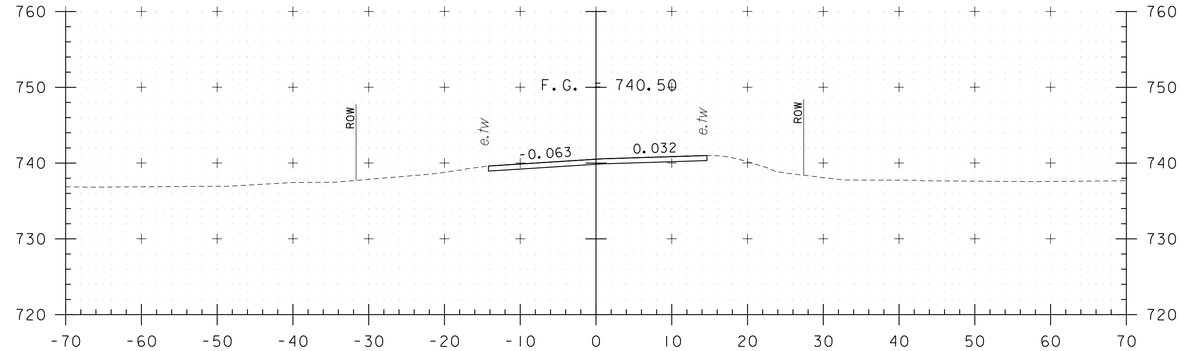

20+50

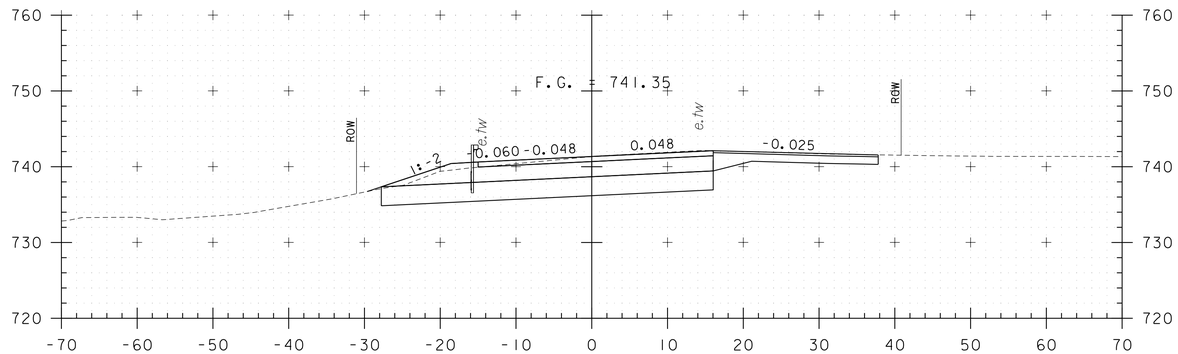

18+50

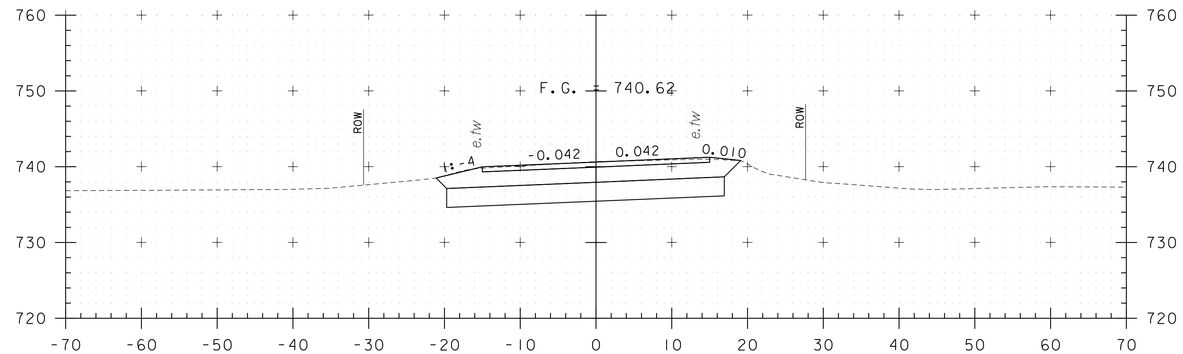

20+00
END PROJECT
BEGIN APPROACH

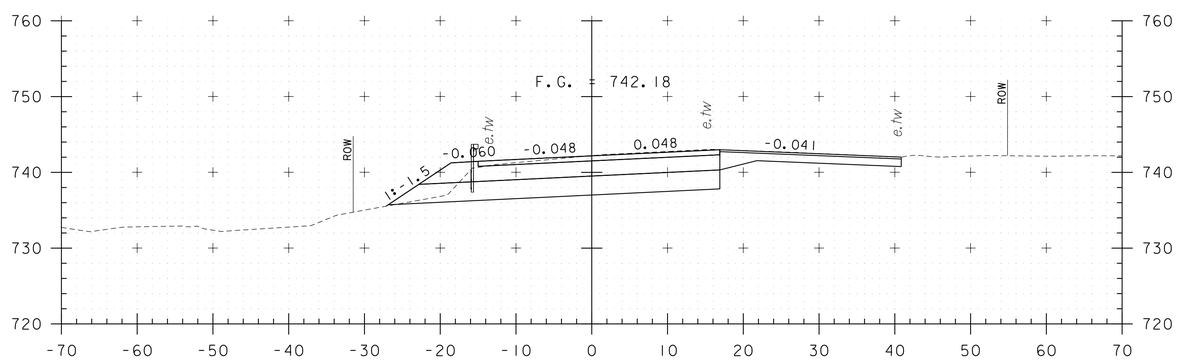

18+00

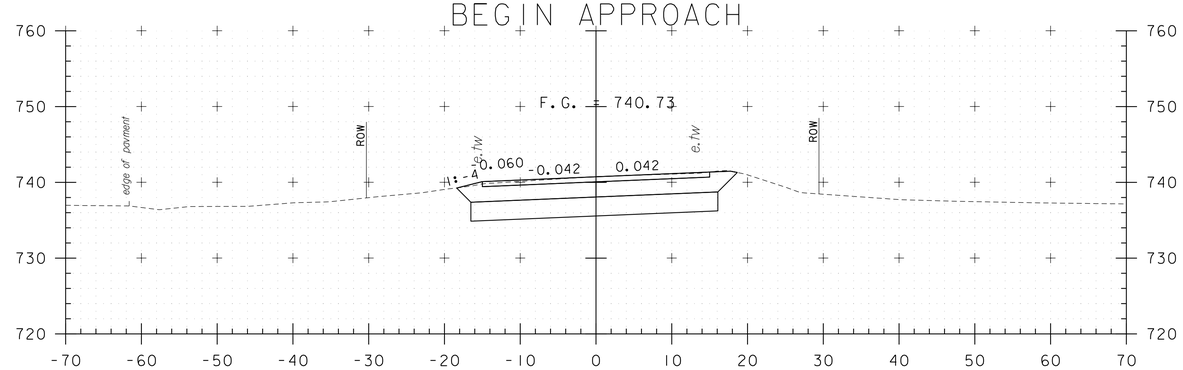

19+50

STA. 18+00 TO STA. 20+50

PROJECT NAME: STOWE	
PROJECT NUMBER: BRF 0235(15)	
FILE NAME: z88c190xsl.dgn	PLOT DATE: 3/9/2015
PROJECT LEADER: J. BYATT	DRAWN BY: K. RUTTER
DESIGNED BY: K. RUTTER	CHECKED BY: C. GREGORY
VT 108 CROSS SECTIONS	SHEET 56 OF 79

CONSULTING ENGINEERS

CLD 12-0120 MODEL: VT108 XS 4

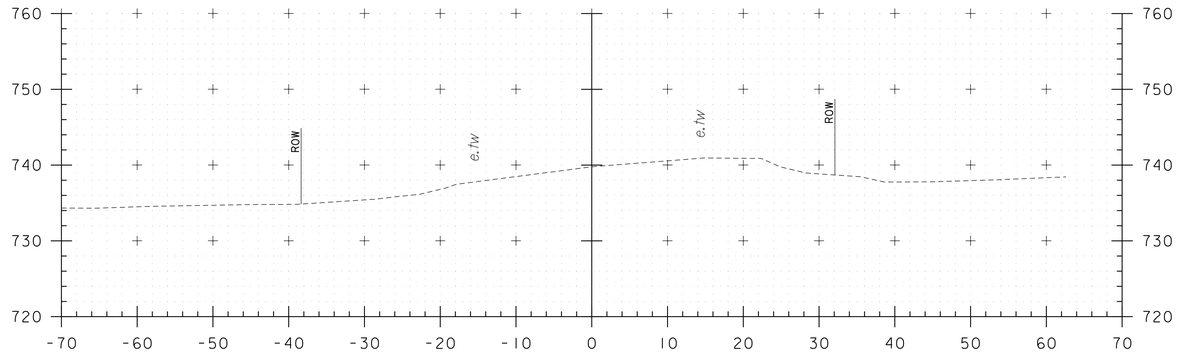

22+00

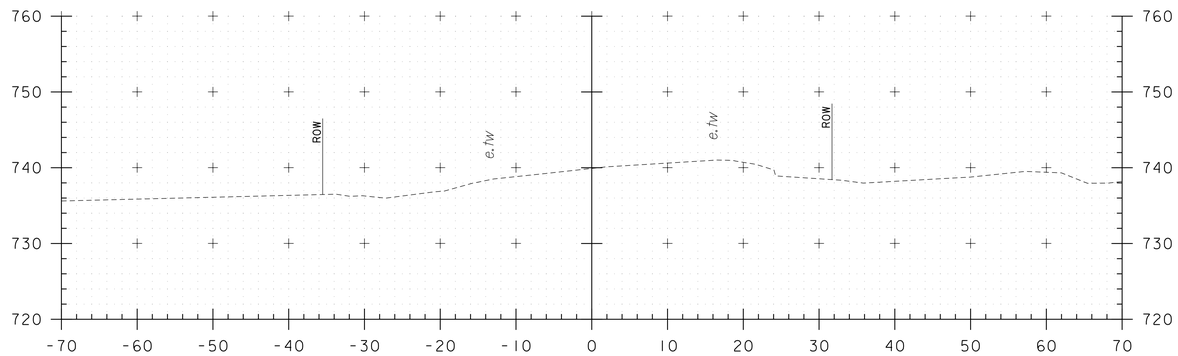

21+50

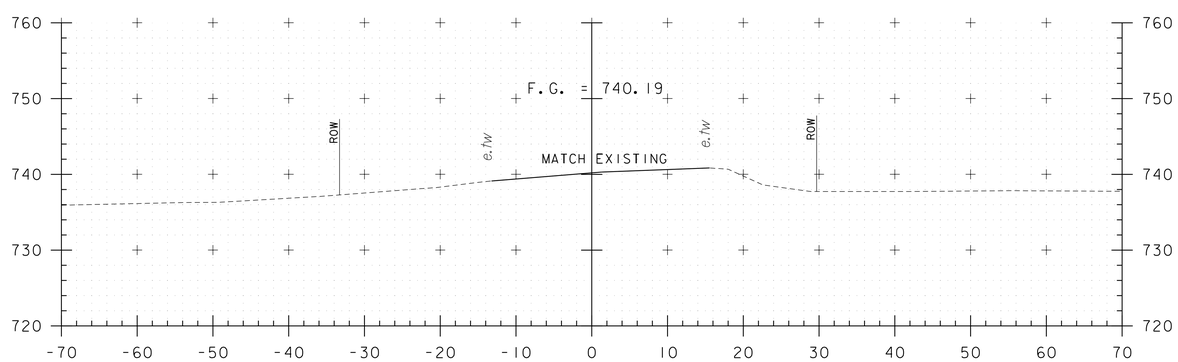

21+00
END APPROACH

STA. 21+00 TO STA. 22+00

PROJECT NAME: STOWE
PROJECT NUMBER: BRF 0235(15)

FILE NAME: z88c190xsl.dgn
PROJECT LEADER: J. BYATT
DESIGNED BY: K. RUTTER
VT 108 CROSS SECTIONS

PLOT DATE: 3/9/2015
DRAWN BY: K. RUTTER
CHECKED BY: C. GREGORY
SHEET 57 OF 79

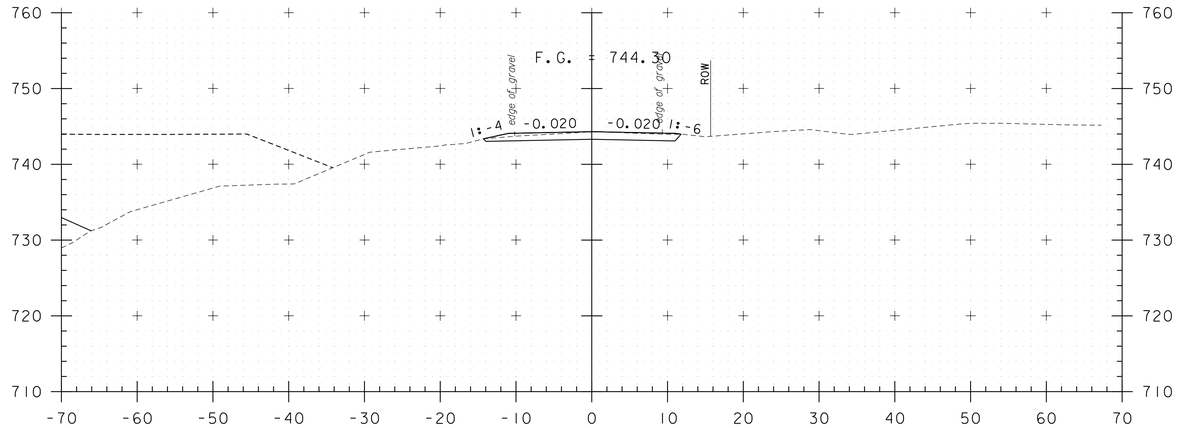

40+50

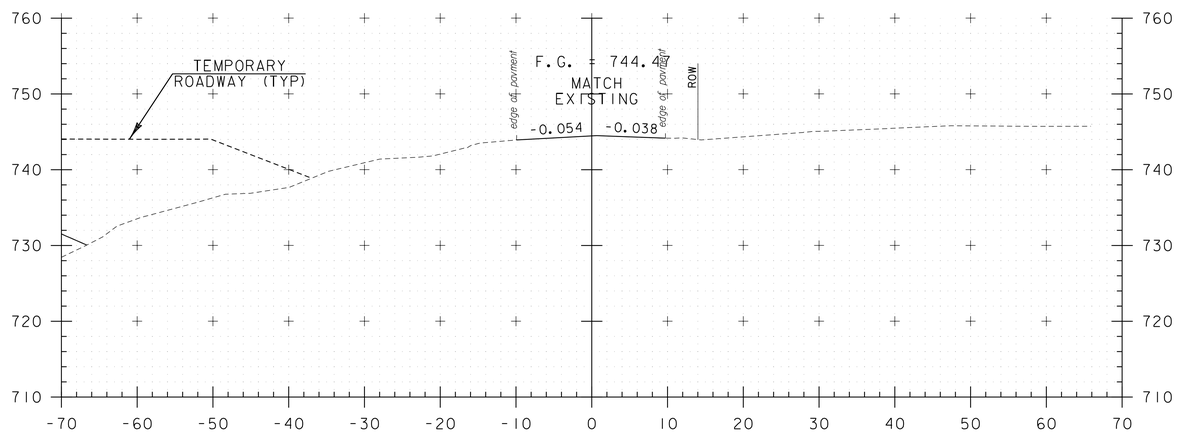

40+45

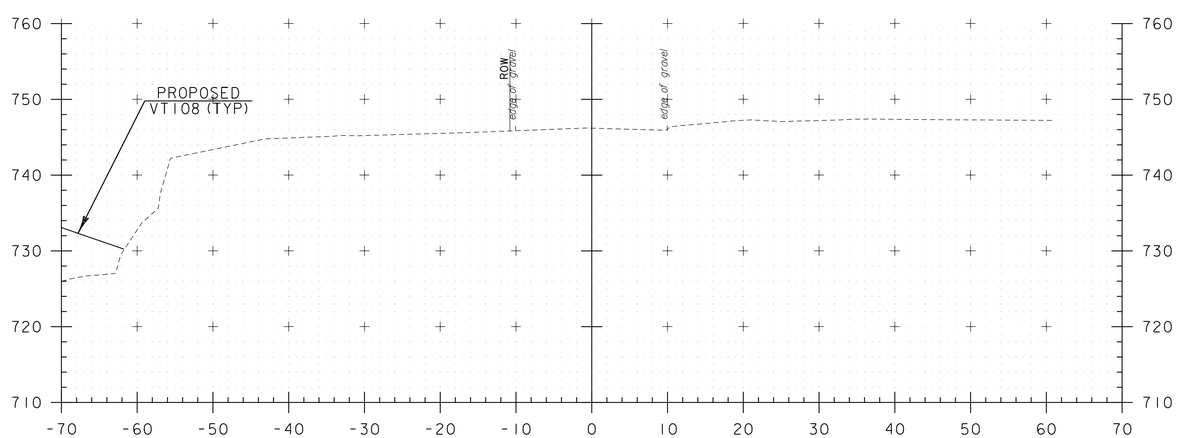

40+00

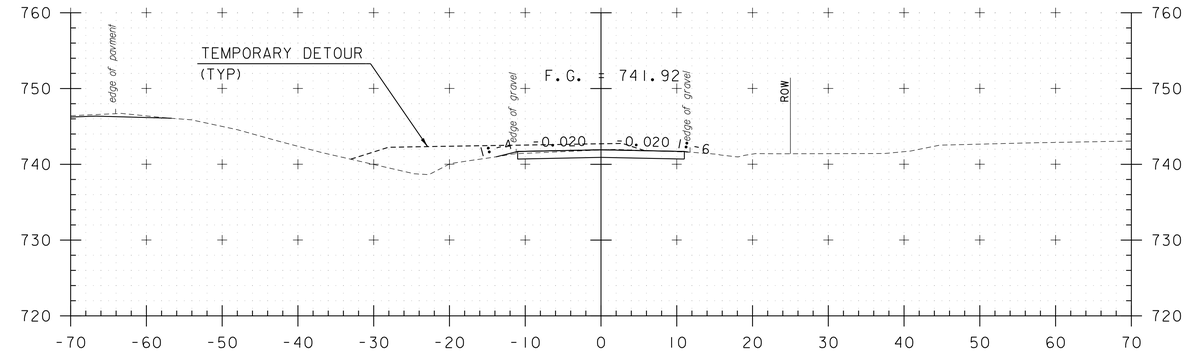

41+50

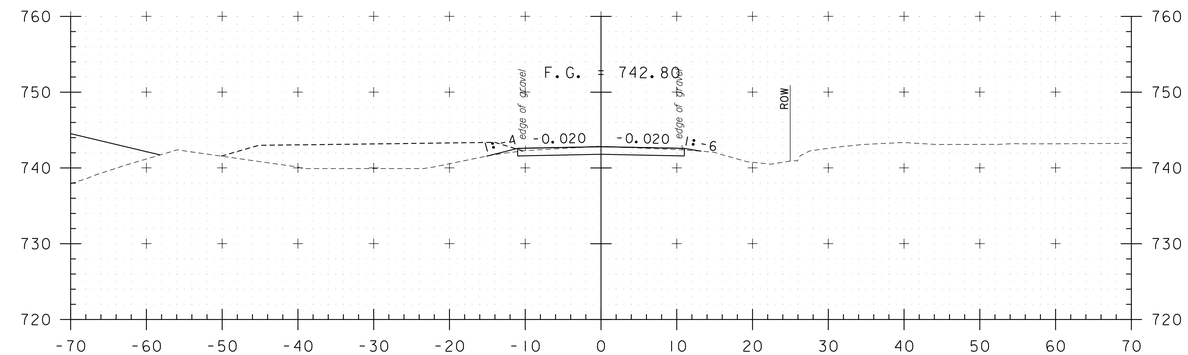

41+00

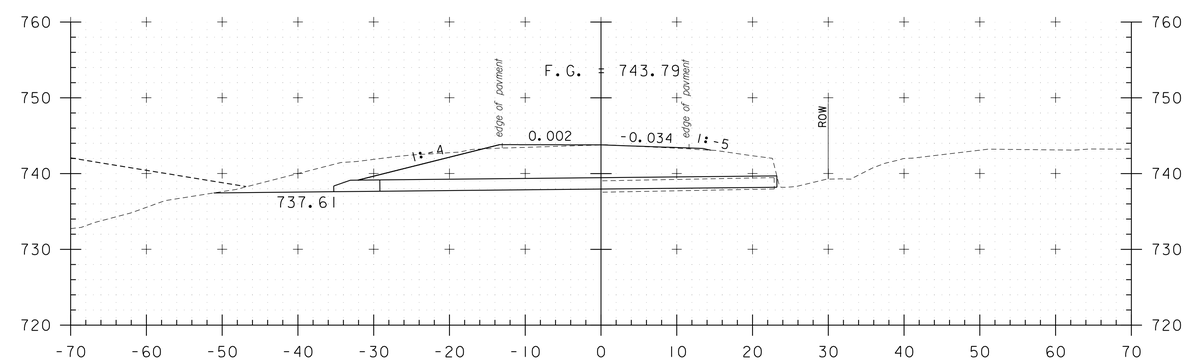

40+65
SKEWED

STA. 40+00 TO STA. 41+50

PROJECT NAME: STOWE	
PROJECT NUMBER: BHF 0235(15)	
FILE NAME: z88c190xsMeadow.dgn	PLOT DATE: 3/9/2015
PROJECT LEADER: J. BYATT	DRAWN BY: K. RUTTER
DESIGNED BY: K. RUTTER	CHECKED BY: C. GREGORY
MEADOW LANE CROSS SECTIONS	SHEET 58 OF 79

CONSULTING ENGINEERS

MODEL: MEADOW LANE XS 1

CLD 12-0120

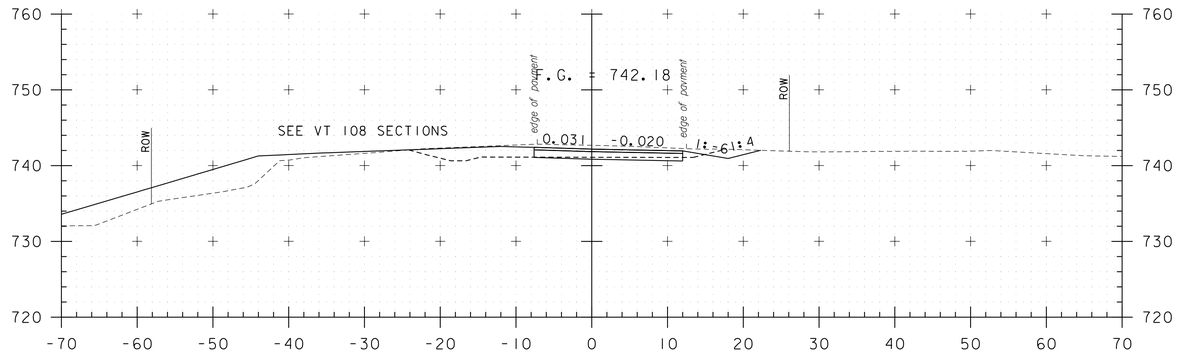

43+00

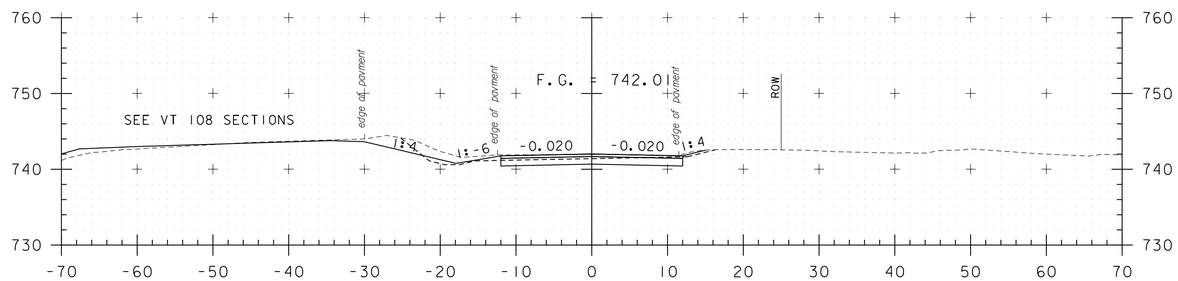

42+50

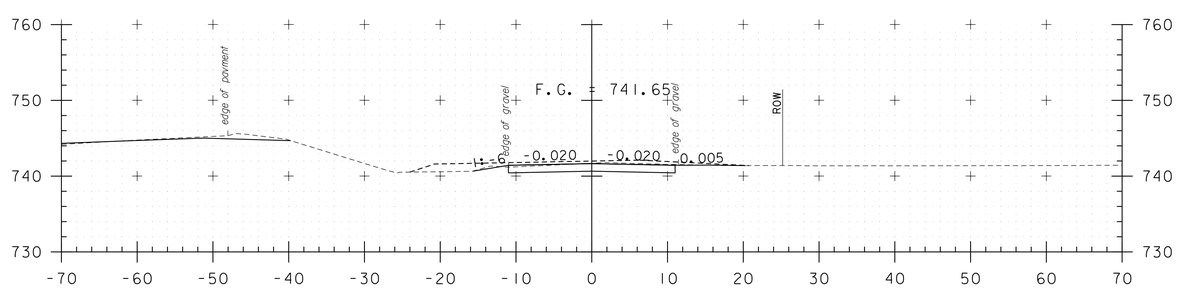

42+00
DRIVE RT

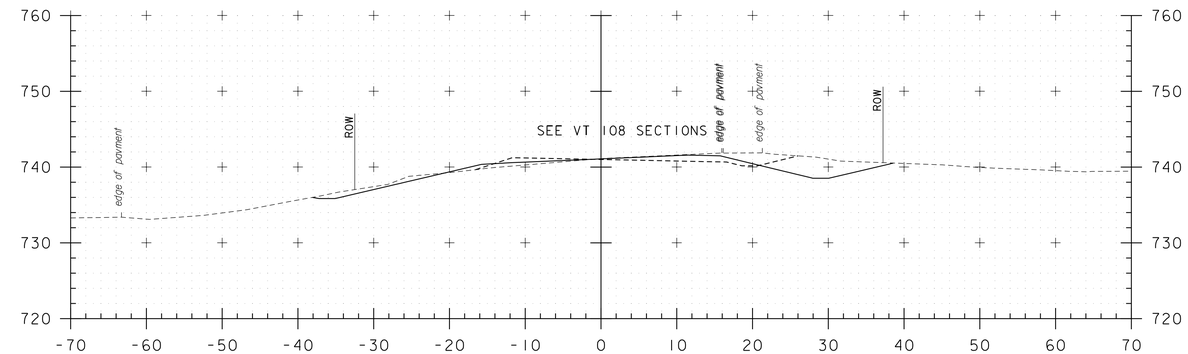

43+65

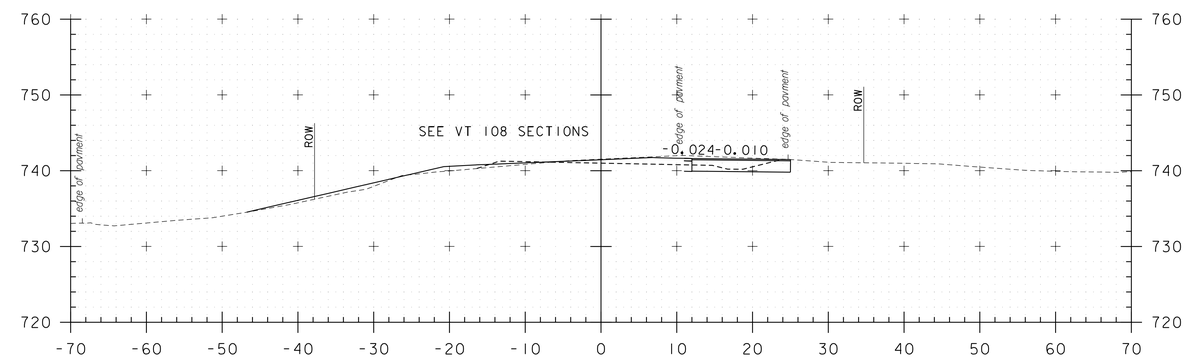

43+50

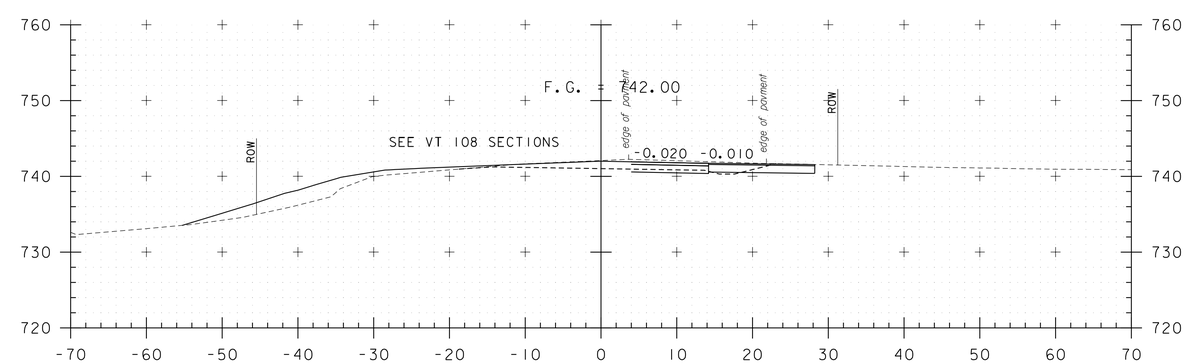

43+30
DRIVE RT

STA. 42+00 TO STA. 43+65

PROJECT NAME: STOWE	
PROJECT NUMBER: BHF 0235(15)	
FILE NAME: z88c190xsMeadow.dgn	PLOT DATE: 3/9/2015
PROJECT LEADER: J. BYATT	DRAWN BY: K. RUTTER
DESIGNED BY: K. RUTTER	CHECKED BY: C. GREGORY
MEADOW LANE CROSS SECTIONS	SHEET 59 OF 79

CONSULTING ENGINEERS

CLD 12-0120 MODEL: MEADOW LANE XS 2

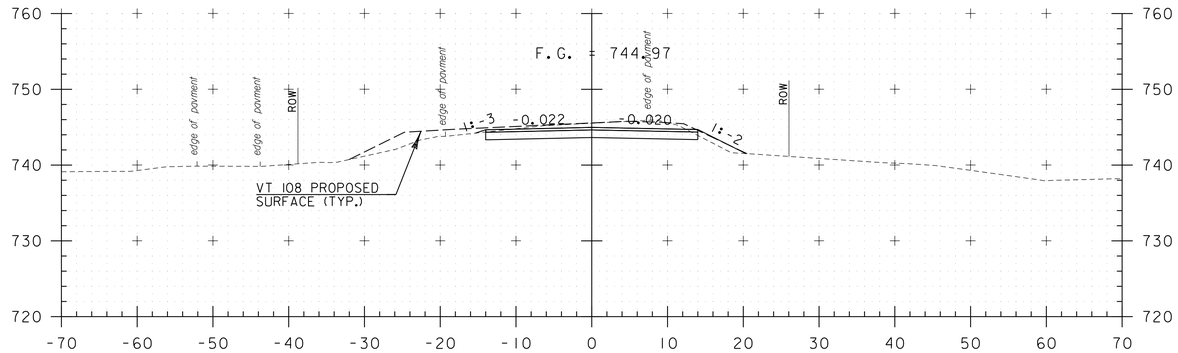

101+00

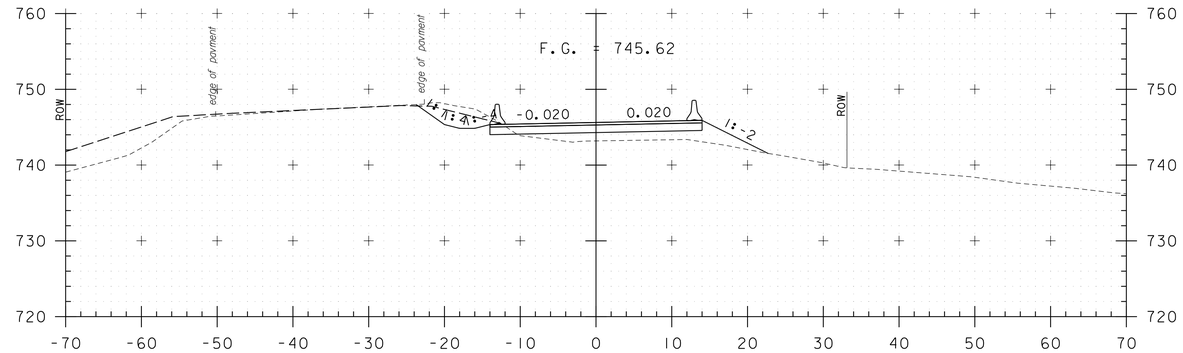

102+50

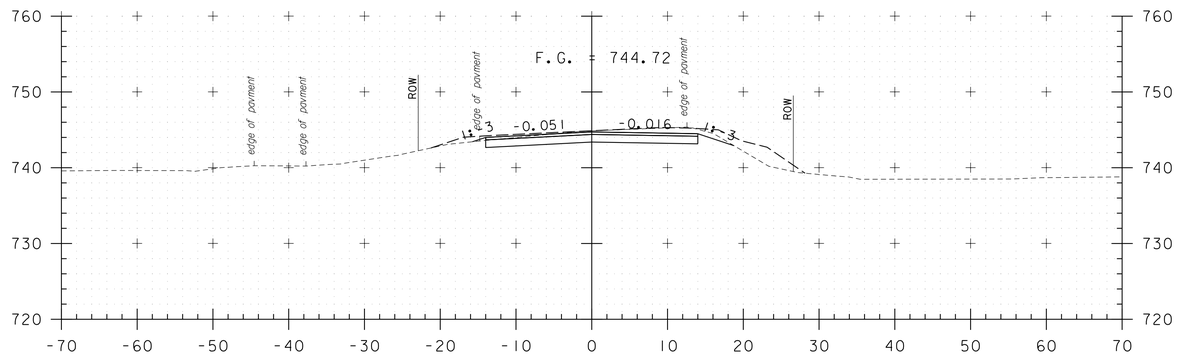

100+50

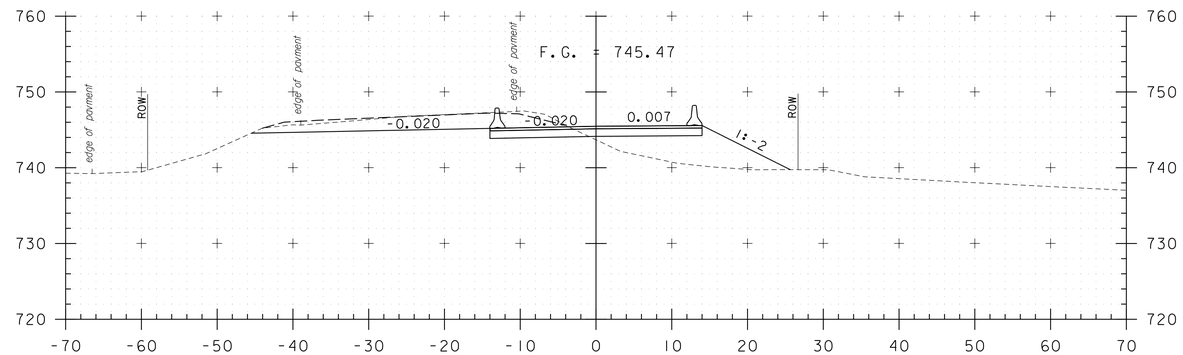

102+00

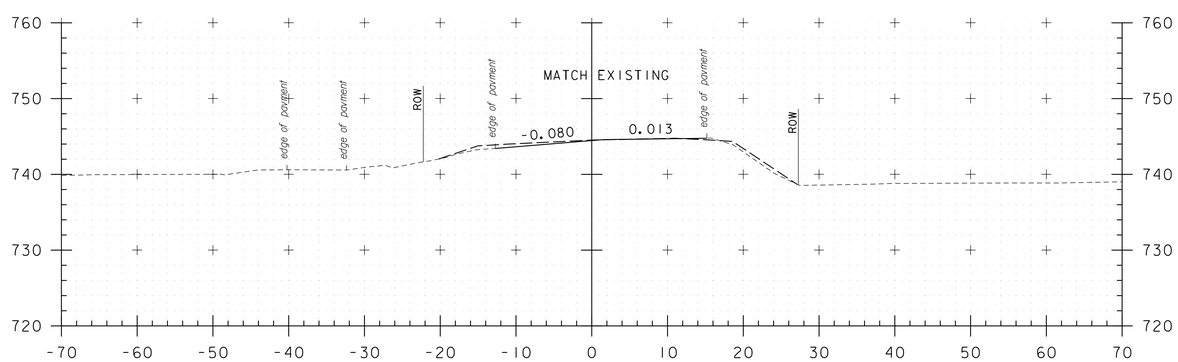

100+00

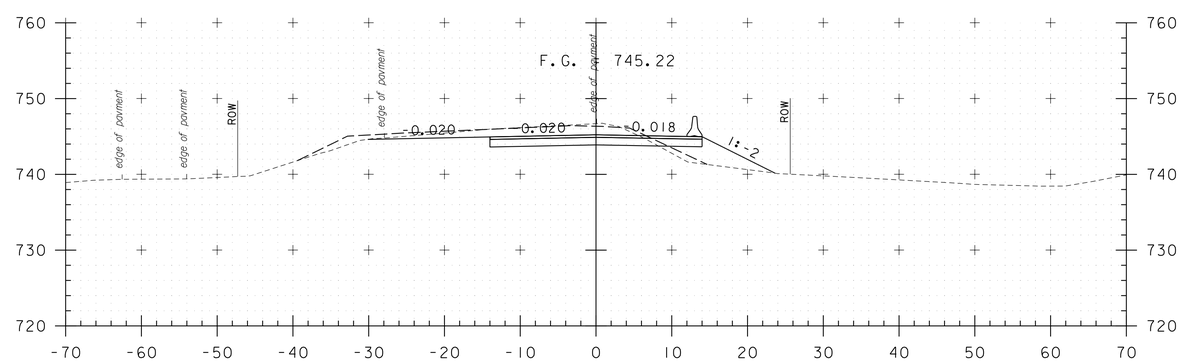

101+50

STA. 100+00 TO STA. 102+50

PROJECT NAME: STOWE	
PROJECT NUMBER: BRF 0235(15)	
FILE NAME: z88c190xsDetour.dgn	PLOT DATE: 3/9/2015
PROJECT LEADER: J. BYATT	DRAWN BY: K. RUTTER
DESIGNED BY: K. RUTTER	CHECKED BY: C. GREGORY
TEMP DETOUR CROSS SECTIONS	SHEET 60 OF 79

CONSULTING ENGINEERS

CLD 12-0120 MODEL: TEMP BRIDGE XS 1

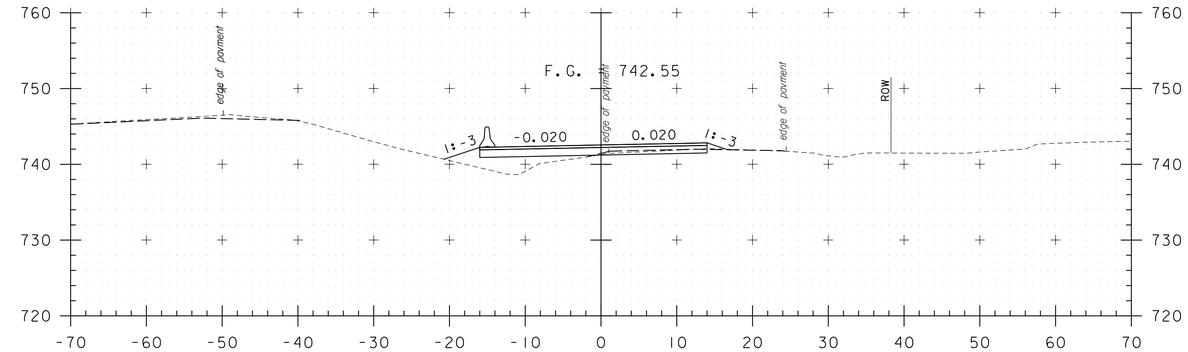

105+00

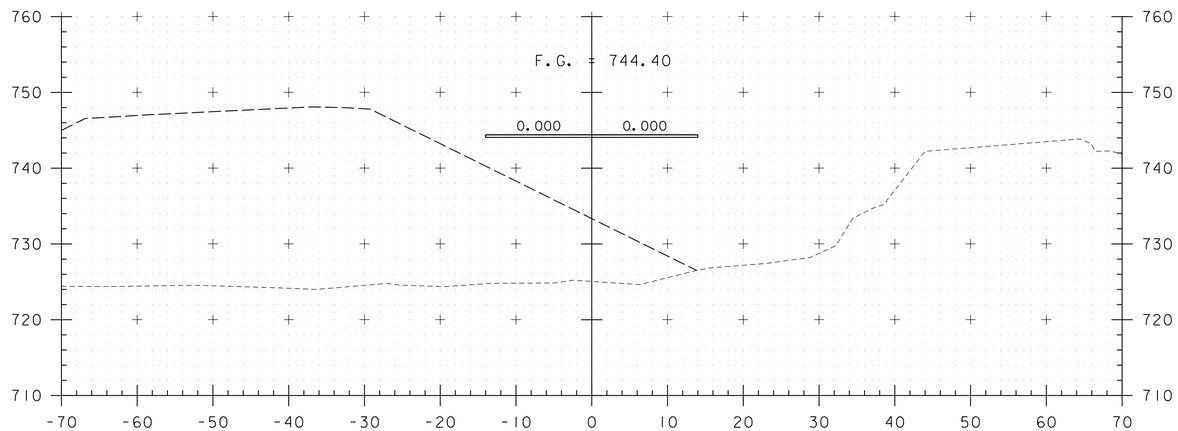

103+50

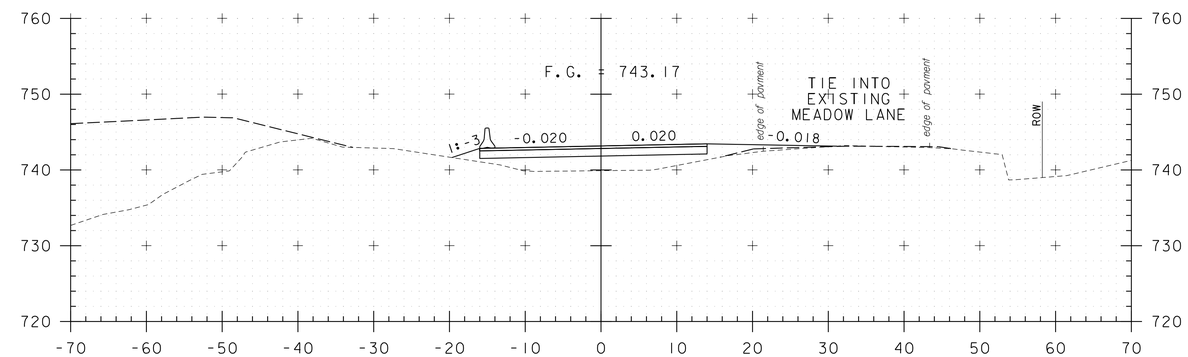

104+50

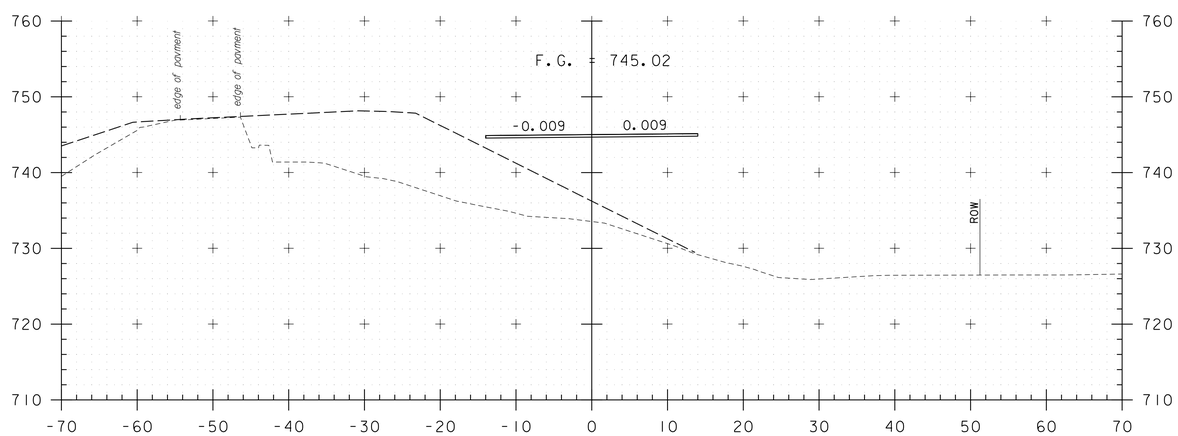

103+00

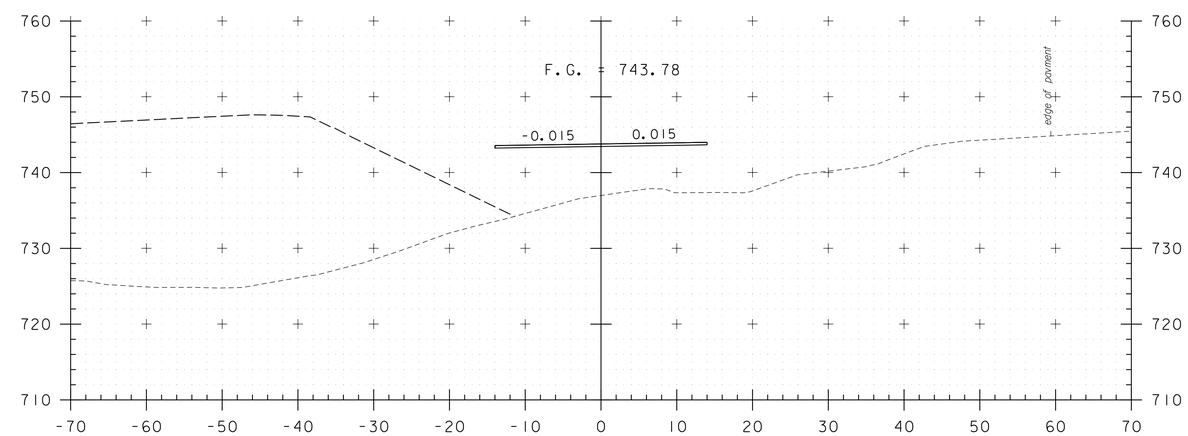

104+00

STA. 103+00 TO STA. 105+00

PROJECT NAME: STOWE
PROJECT NUMBER: BRF 0235(15)

FILE NAME: z88c190xsDetour.dgn
PROJECT LEADER: J. BYATT
DESIGNED BY: K. RUTTER
TEMP DETOUR CROSS SECTIONS

PLOT DATE: 3/9/2015
DRAWN BY: K. RUTTER
CHECKED BY: C. GREGORY
SHEET 61 OF 79

CLD CONSULTING ENGINEERS

MODEL: TEMP BRIDGE XS 2

CLD 12-0120

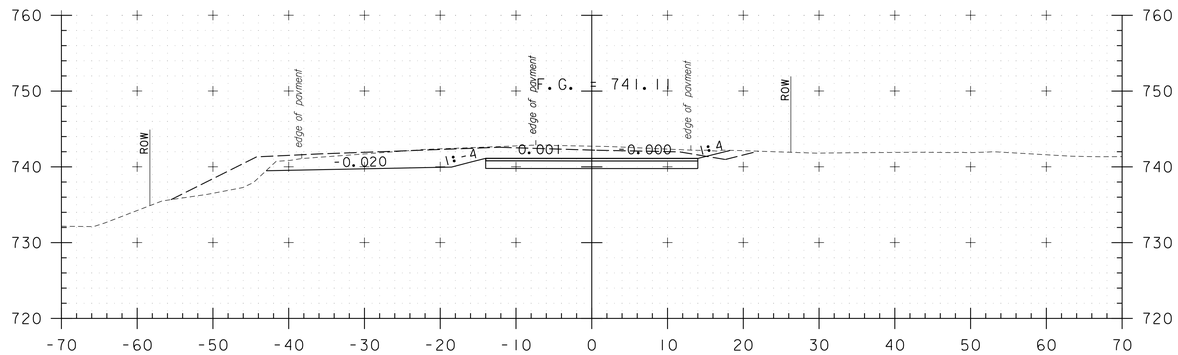

106+50

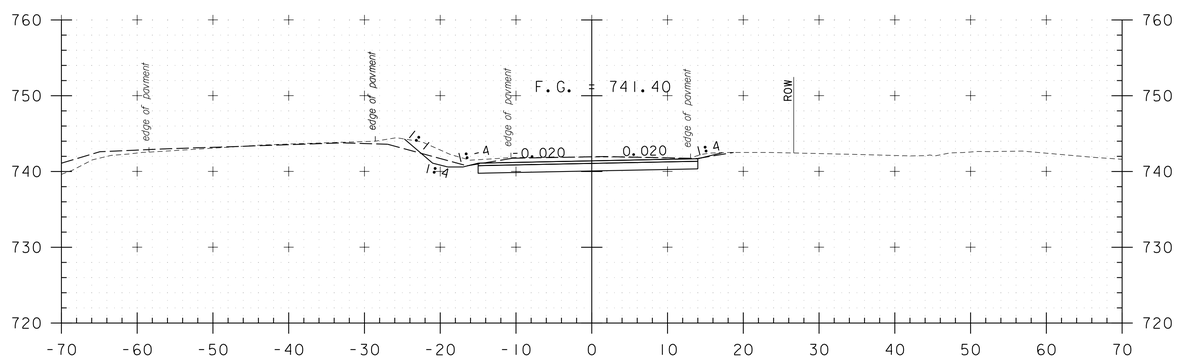

106+00

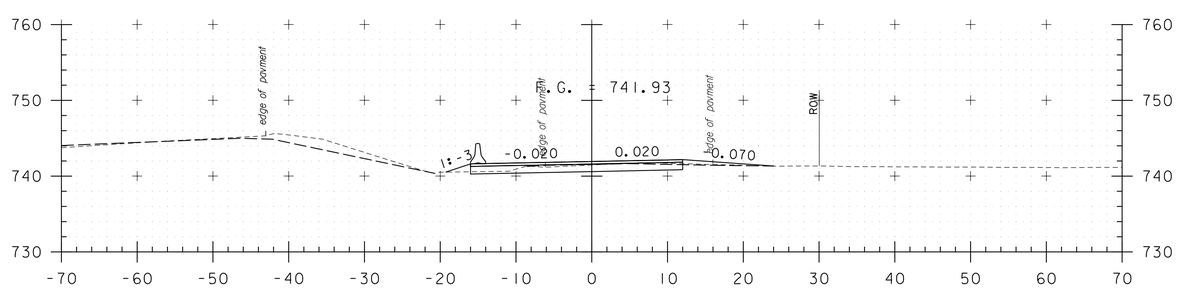

105+50

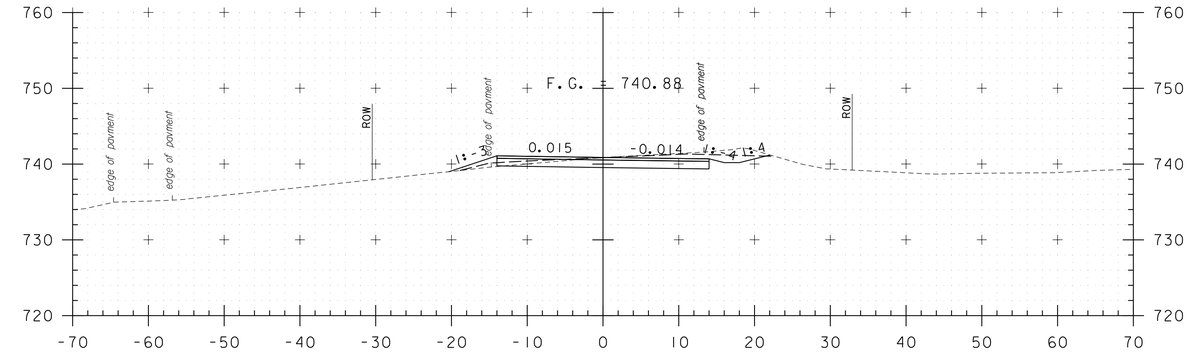

107+50

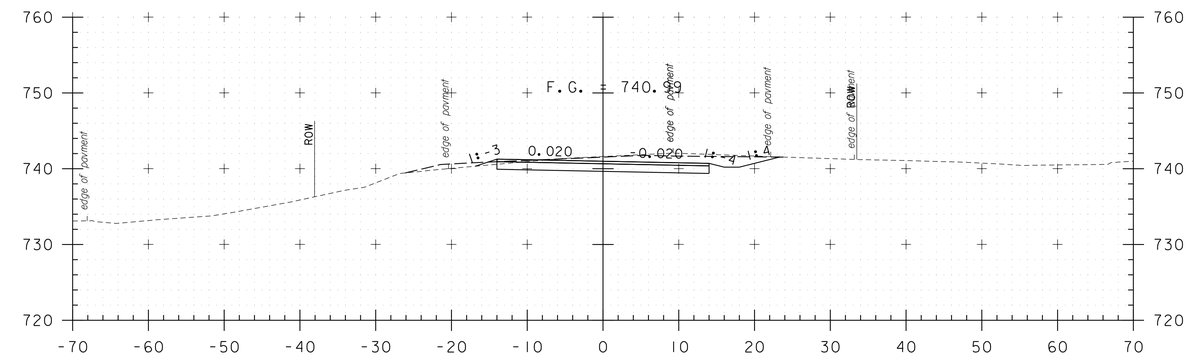

107+00

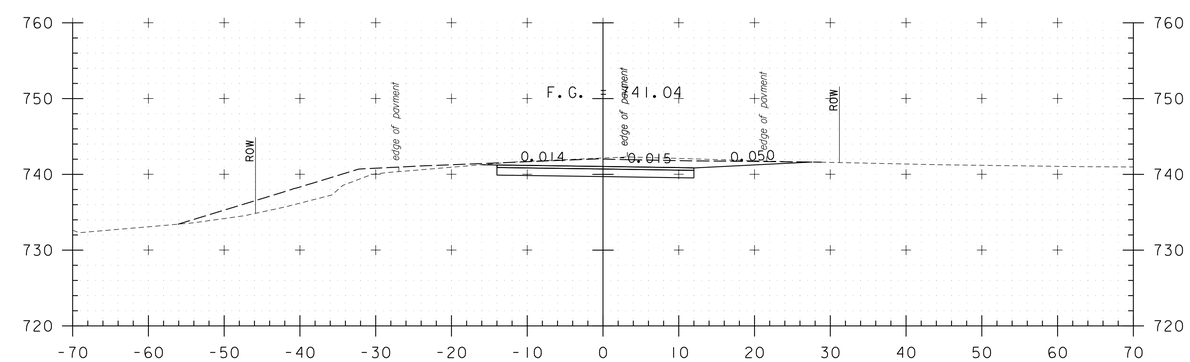

106+80

STA. 105+50 TO STA. 107+50

PROJECT NAME: STOWE	
PROJECT NUMBER: BRF 0235(15)	
FILE NAME: z88cl90xsDetour.dgn	PLOT DATE: 3/9/2015
PROJECT LEADER: J. BYATT	DRAWN BY: K. RUTTER
DESIGNED BY: K. RUTTER	CHECKED BY: C. GREGORY
TEMP DETOUR CROSS SECTIONS	SHEET 62 OF 79

CONSULTING ENGINEERS

CLD 12-0120 MODEL: TEMP BRIDGE XS 3

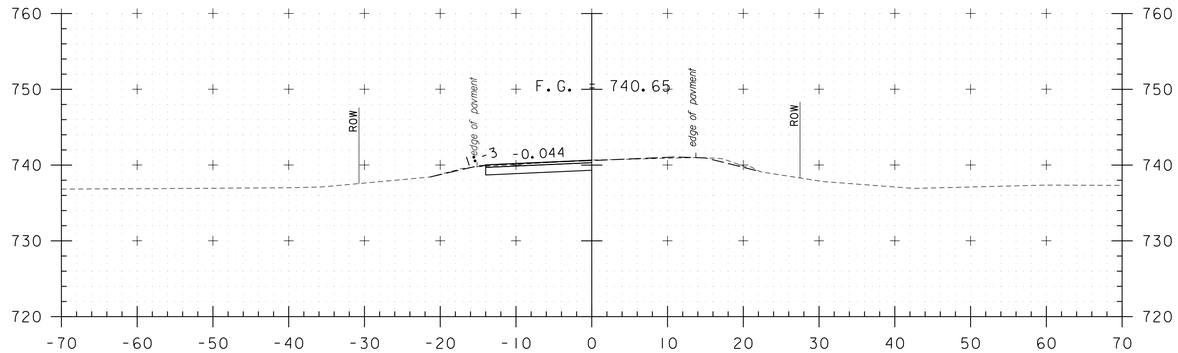

108+50

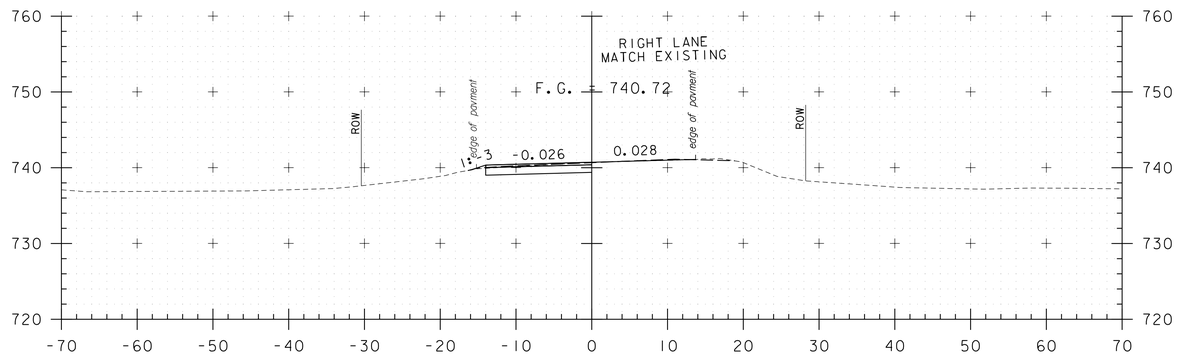

108+20

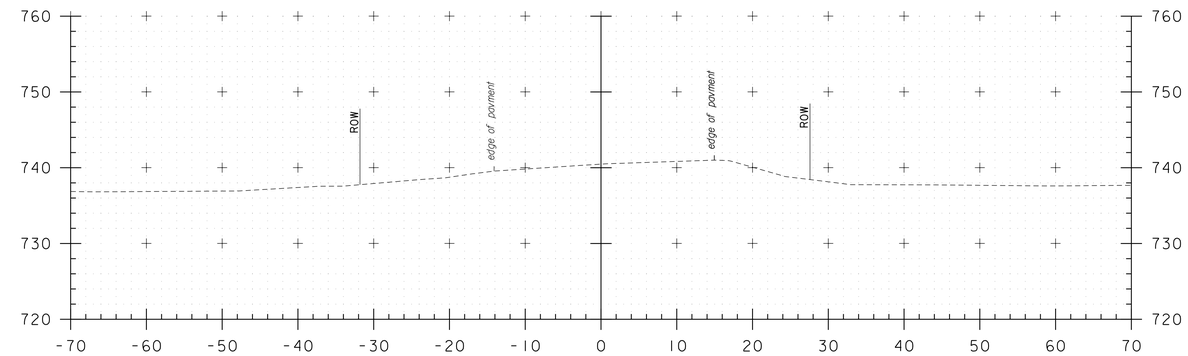

109+00

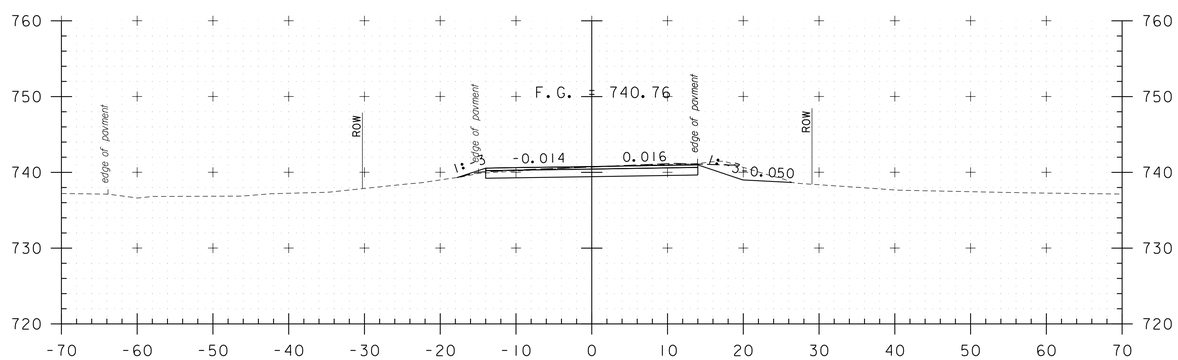

108+00

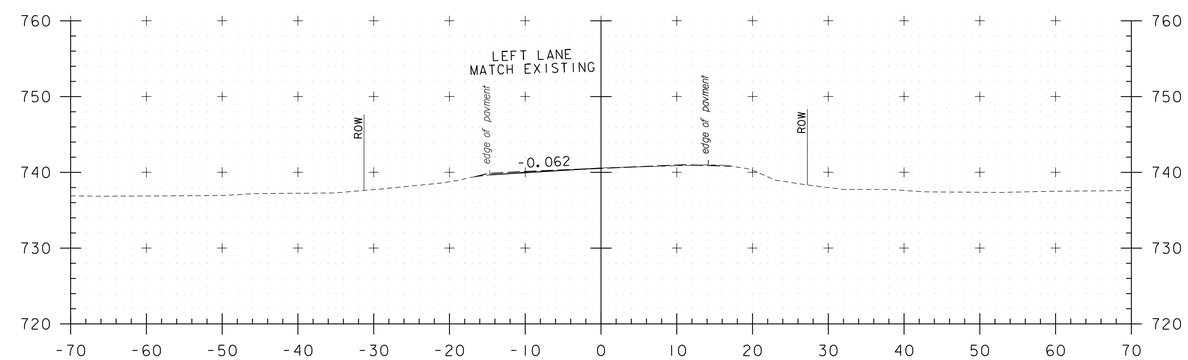

108+80

STA. 108+00 TO STA. 109+00

PROJECT NAME: STOWE	
PROJECT NUMBER: BRF 0235(15)	
FILE NAME: z88cl90xsDetour.dgn	PLOT DATE: 3/9/2015
PROJECT LEADER: J. BYATT	DRAWN BY: K. RUTTER
DESIGNED BY: K. RUTTER	CHECKED BY: C. GREGORY
TEMP DETOUR CROSS SECTIONS	SHEET 63 OF 79

CONSULTING ENGINEERS

CLD 12-0120 MODEL: TEMP BRIDGE XS 4

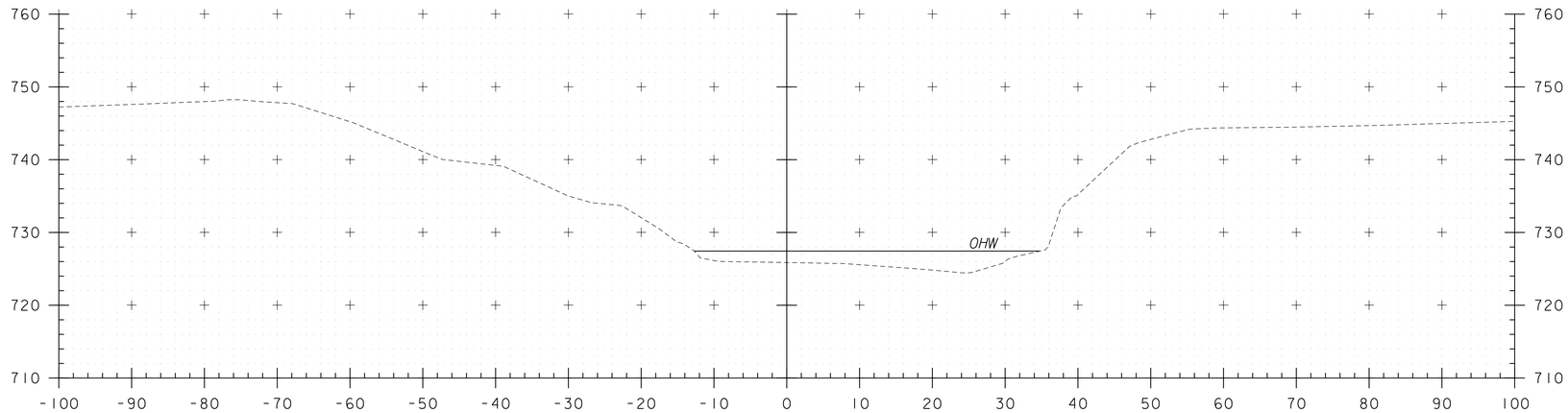

51+25

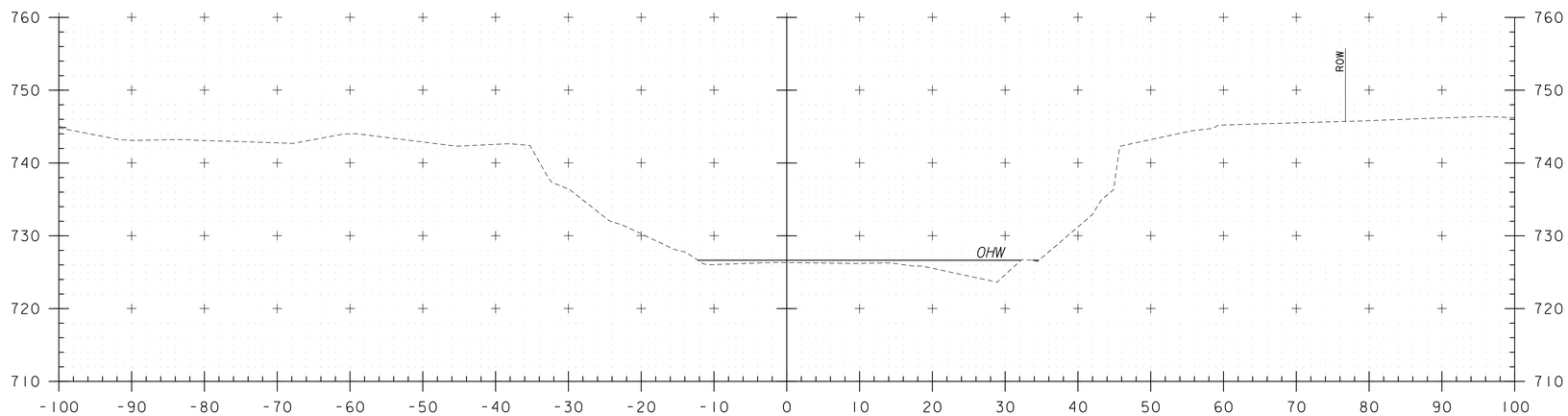

51+00

STA. 51+00 TO STA. 51+25

PROJECT NAME: STOWE
PROJECT NUMBER: BRF 0235(15)

FILE NAME: z88cl90xsChan.dgn
PROJECT LEADER: J. BYATT
DESIGNED BY: J. FRENCH
CHANNEL CROSS SECTIONS

PLOT DATE: 3/9/2015
DRAWN BY: M. SMITH
CHECKED BY: J. BYATT
SHEET 64 OF 79

CONSULTING ENGINEERS

CLD 12-0120 MODEL: CHANNEL XS 1

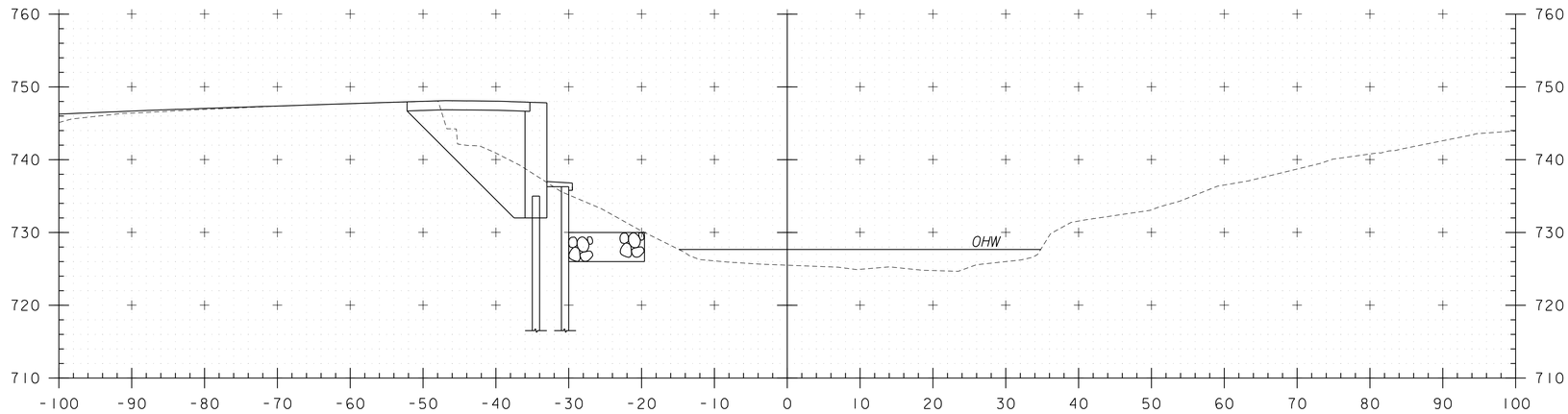

STA. 51+62 LT
END GRUBBING MATERIAL

51+50

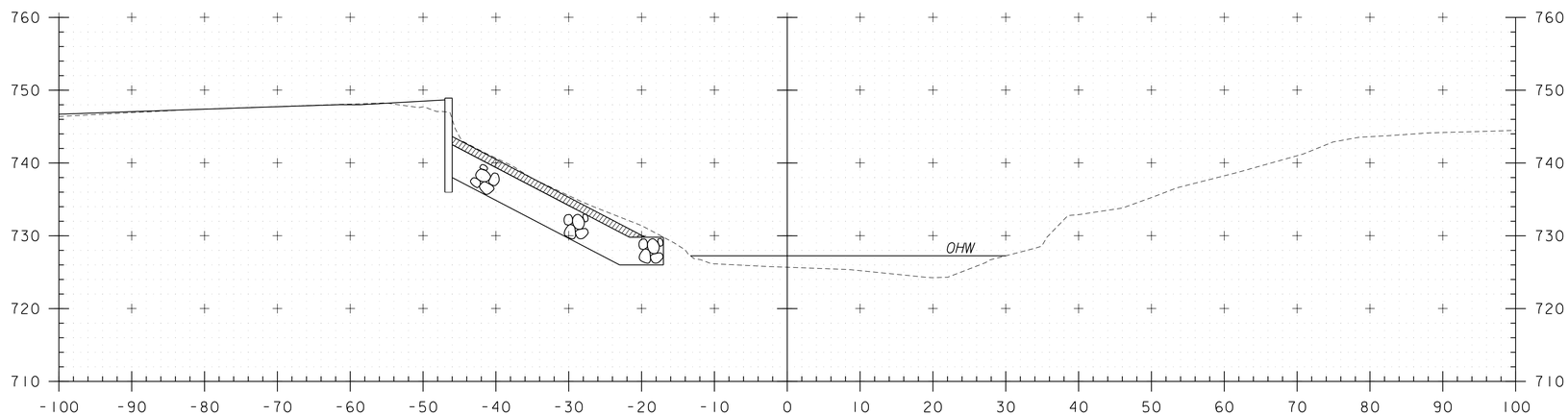

STA. 51+30 LT
BEGIN UNCLASSIFIED CHANNEL EXCAVATION
BEGIN GEOTEXTILE UNDER STONE FILL
BEGIN STONE FILL, TYPE IV
BEGIN GRUBBING MATERIAL

51+40

STA. 51+40 TO STA. 51+50

PROJECT NAME: STOWE
PROJECT NUMBER: BRF 0235(15)

FILE NAME: z88cl90xsChan.dgn
PROJECT LEADER: J. BYATT
DESIGNED BY: J. FRENCH
CHANNEL CROSS SECTIONS

PLOT DATE: 3/9/2015
DRAWN BY: M. SMITH
CHECKED BY: J. BYATT
SHEET 65 OF 79

CLD 12-0120 MODEL: CHANNEL XS 2

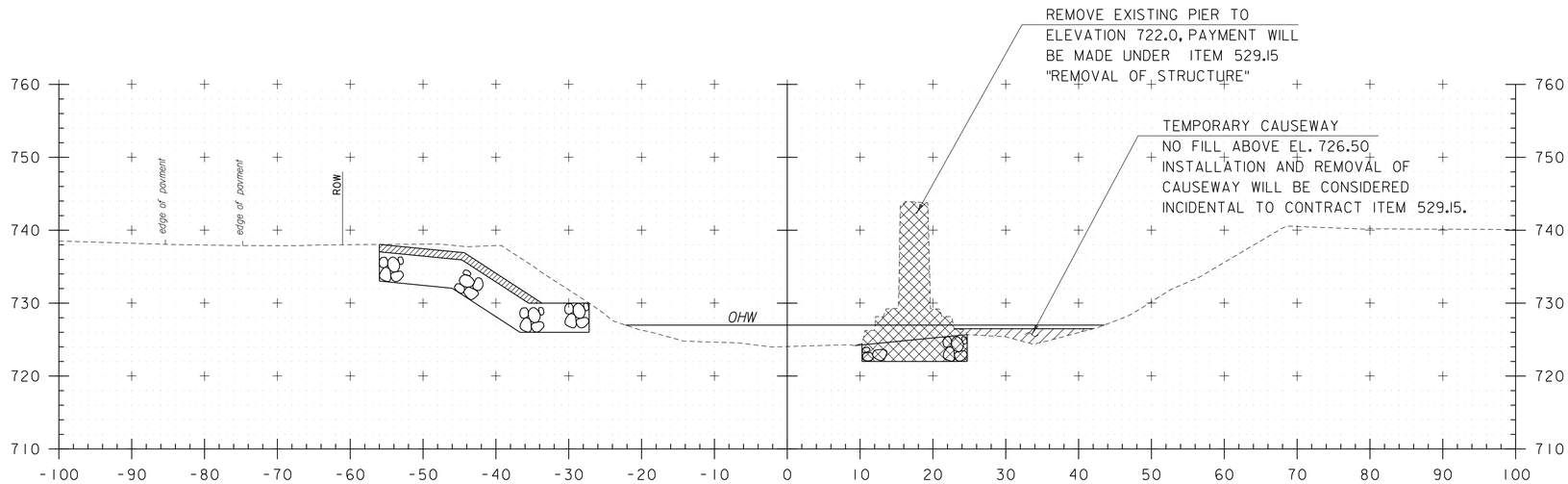

52+00

STA. 51+90.50 PIER
BEGIN GEOTEXTILE UNDER STONE FILL
BEGIN STONE FILL TYPE IV

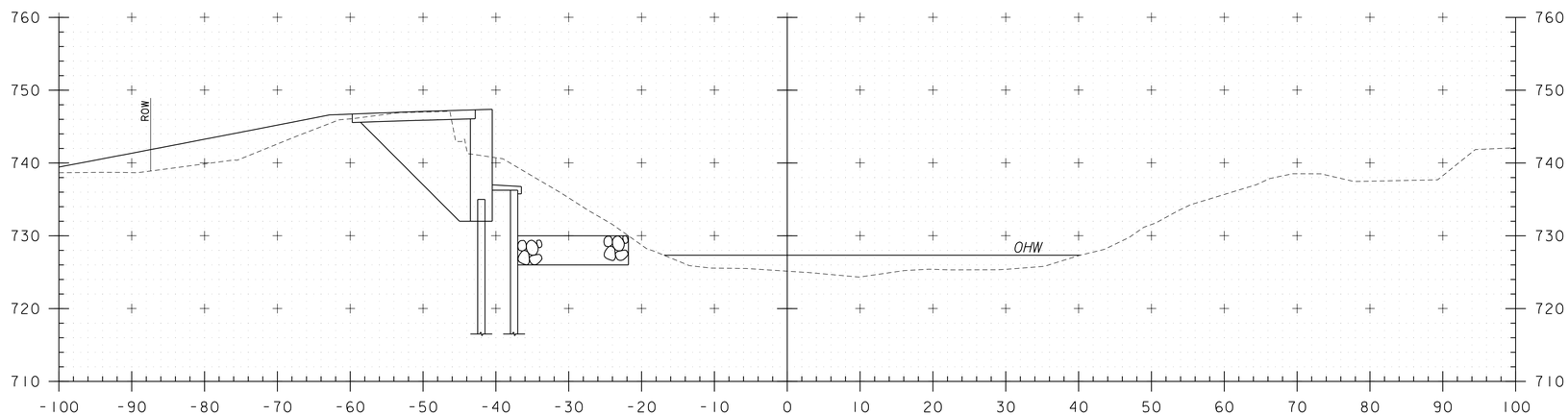

STA. 51+88.75 LT
BEGIN GRUBBING MATERIAL

51+75

STA. 51+75 TO STA. 52+00

PROJECT NAME: STOWE	
PROJECT NUMBER: BRF 0235(15)	
FILE NAME: z88c190xsChan.dgn	PLOT DATE: 3/9/2015
PROJECT LEADER: J. BYATT	DRAWN BY: M. SMITH
DESIGNED BY: J. FRENCH	CHECKED BY: J. BYATT
CHANNEL CROSS SECTIONS	SHEET 66 OF 79

CONSULTING ENGINEERS

CLD 12-0120 MODEL: CHANNEL XS 3

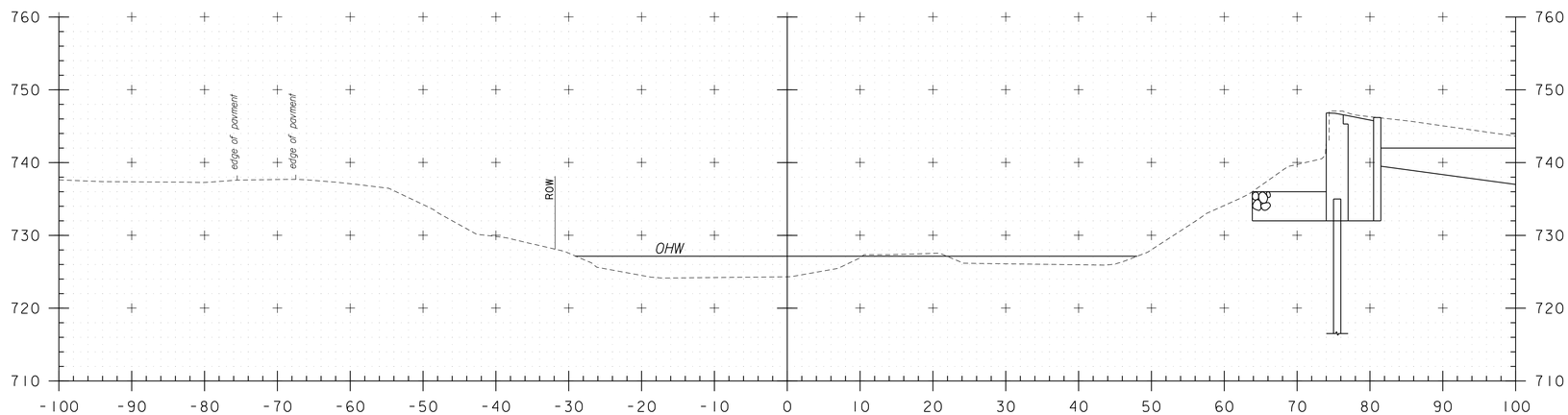

52+50

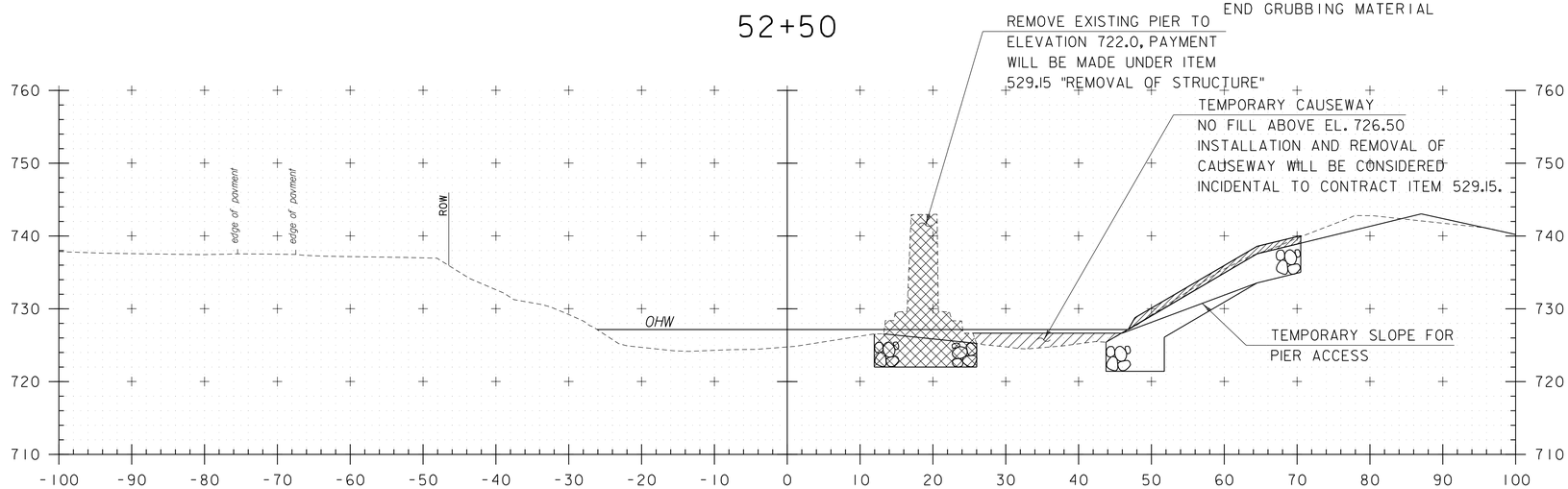

STA. 52+14 LT
END UNCLASSIFIED CHANNEL EXCAVATION
END GEOTEXTILE UNDER STONE FILL
END STONE FILL, TYPE IV
END GRUBBING MATERIAL

52+25

STA. 52+41.50
END GEOTEXTILE
UNDER STONE FILL
END STONE FILL, TYPE IV

STA. 52+15.25 RT
BEGIN UNCLASSIFIED CHANNEL EXCAVATION
BEGIN GEOTEXTILE UNDER STONE FILL
BEGIN STONE FILL, TYPE IV
BEGIN GRUBBING MATERIAL

STA. 52+25 TO STA. 52+50

PROJECT NAME: STOWE	
PROJECT NUMBER: BRF 0235(15)	
FILE NAME: z88cl90xsChan.dgn	PLOT DATE: 3/9/2015
PROJECT LEADER: J. BYATT	DRAWN BY: M. SMITH
DESIGNED BY: J. FRENCH	CHECKED BY: J. BYATT
CHANNEL CROSS SECTIONS	SHEET 67 OF 79

CONSULTING ENGINEERS

CLD 12-0120 MODEL: CHANNEL XS 4

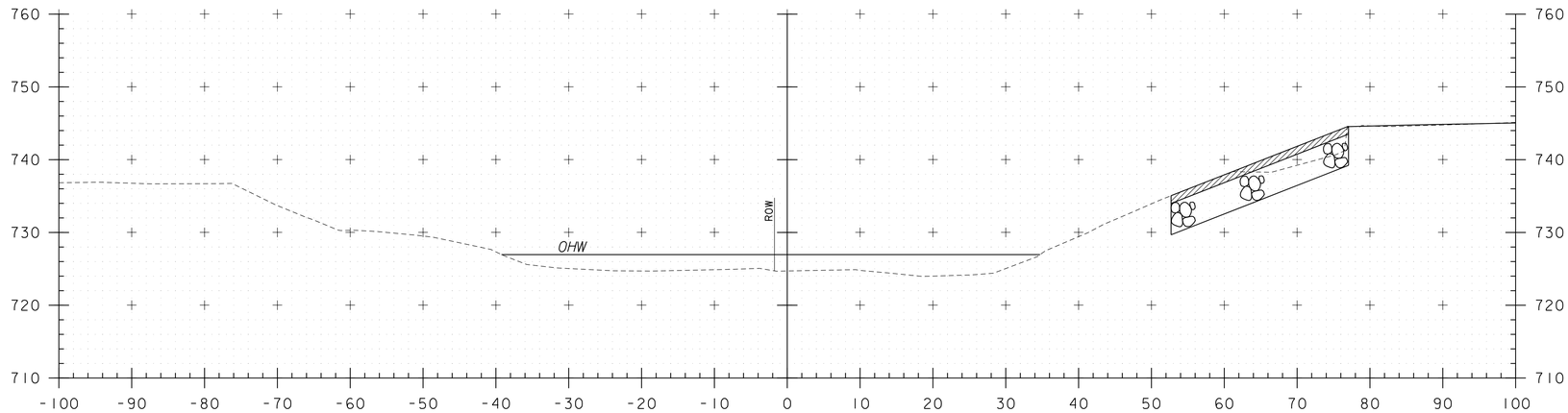

53+00

STA. 53+10.5 RT
END UNCLASSIFIED CHANNEL EXCAVATION
END GEOTEXTILE UNDER STONE FILL
END STONE FILL, TYPE IV
END GRUBBING MATERIAL

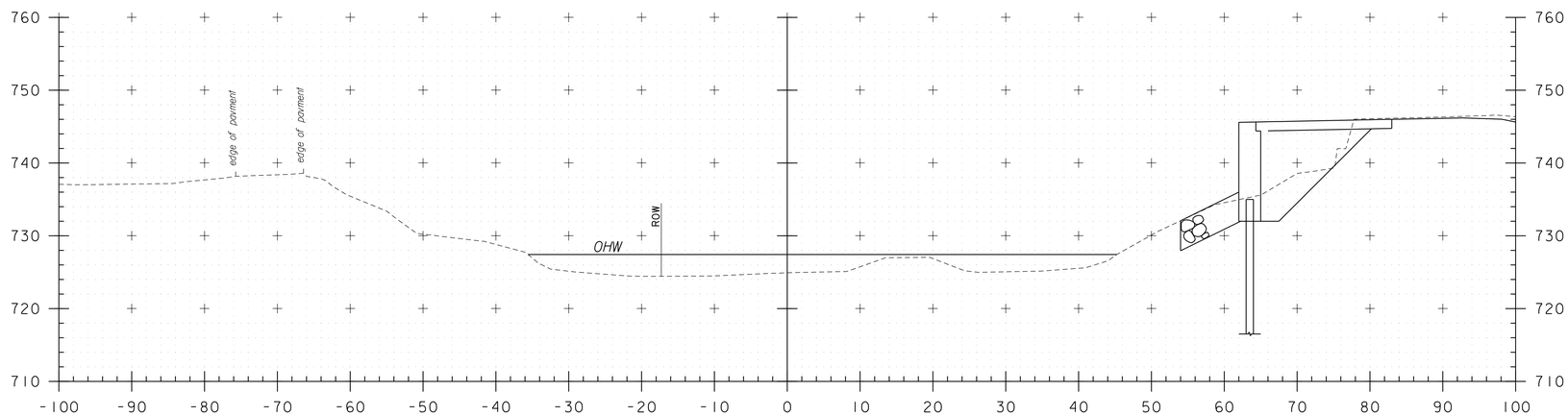

STA. 52+74.0
BEGIN GRUBBING MATERIAL

52+75

STA. 52+75 TO STA. 53+00

PROJECT NAME: STOWE	
PROJECT NUMBER: BRF 0235(15)	
FILE NAME: z88cl90xsChan.dgn	PLOT DATE: 3/9/2015
PROJECT LEADER: J. BYATT	DRAWN BY: M. SMITH
DESIGNED BY: J. FRENCH	CHECKED BY: J. BYATT
CHANNEL CROSS SECTIONS	SHEET 68 OF 79

CONSULTING ENGINEERS

CLD 12-0120 MODEL: CHANNEL XS 5

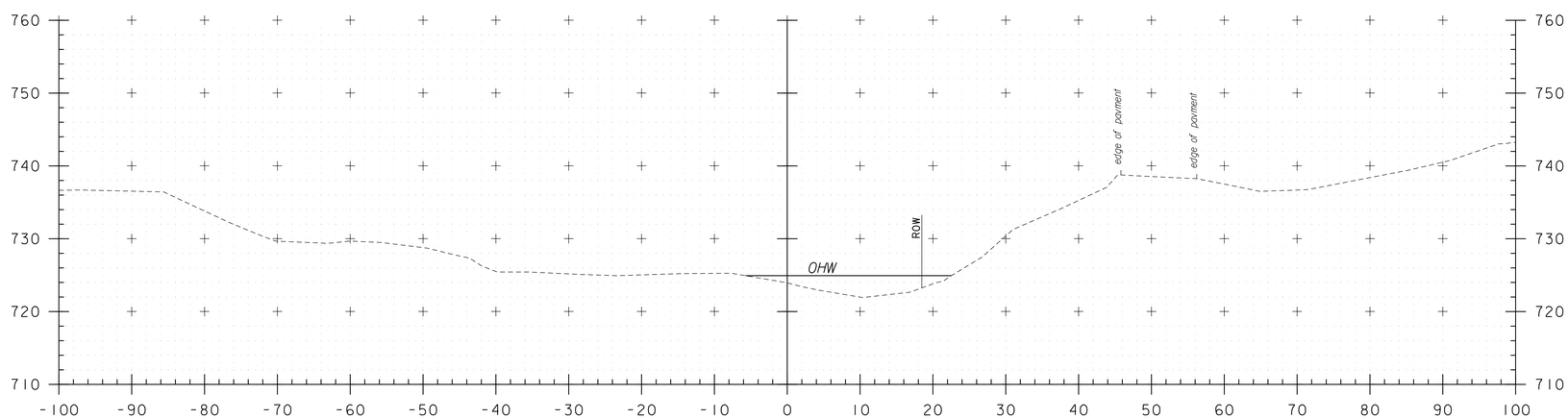

53+25

STA. 53+25

PROJECT NAME: STOWE	
PROJECT NUMBER: BRF 0235(15)	
FILE NAME: z88cl90xsChan.dgn	PLOT DATE: 3/9/2015
PROJECT LEADER: J. BYATT	DRAWN BY: M. SMITH
DESIGNED BY: J. FRENCH	CHECKED BY: J. BYATT
CHANNEL CROSS SECTIONS	SHEET 69 OF 79

CLD CONSULTING ENGINEERS

CLD 12-0120 MODEL: CHANNEL XS 6

EPSC PLAN NARRATIVE

1.1 PROJECT DESCRIPTION

THIS PROJECT INVOLVES THE REPLACEMENT OF VT ROUTE 108 BRIDGE 3 OVER THE WEST BRANCH OF THE LITTLE RIVER. VT ROUTE 108 BRIDGE 3 IS LOCATED IN THE TOWN OF STOWE, APPROXIMATELY AT THE INTERSECTION OF VT ROUTE 108 AND MEADOW LANE. A TEMPORARY DETOUR WILL BE REQUIRED AND A TEMPORARY BRIDGE WILL BE BUILT TO ACCOMMODATE THE DETOUR. THE TEMPORARY BRIDGE WILL BE LOCATED SOUTH OF THE BRIDGE REPLACEMENT. MEADOW LANE WILL BE PARTIALLY USED FOR THE DETOUR.

NOTE: AREA OF DISTURBANCE INCLUDES LIMITS OF EARTH DISTURBANCE WITHIN THE PROJECT AREA, AS WELL AS WASTE, BORROW AND STAGING AREAS, AND OTHER EARTH DISTURBING ACTIVITIES WITHIN OR DIRECTLY ADJACENT TO THE PROJECT LIMITS AS SHOWN ON THE ATTACHED EPSC PLAN.

TOTAL AREA OF DISTURBANCE AS SHOWN ON THE ATTACHED EPSC PLAN IS APPROXIMATELY 1.61 ACRES.

IT IS ANTICIPATED THAT THIS PROJECT WILL LAST ONE AND A HALF CONSTRUCTION SEASONS.

1.2 SITE INVENTORY

1.2.1 TOPOGRAPHY

THE TOPOGRAPHY OF THE AREA IS CHARACTERIZED AS HILLY TO MOUNTAINOUS. AN OPEN FIELD WITH A PAVED BIKE PATH IS LOCATED NORTH OF THE BRIDGE. SOUTHWEST OF THE BRIDGE IS AN INN WITH A LARGE DIRT/GRAVEL PARKING AREA AND LANDSCAPING ADJACENT TO THE TOP OF THE RIVER BANK. SOUTHEAST OF THE BRIDGE IS MEADOW LANE, WHICH IS UNPAVED. AN INN AND RESIDENCE ARE LOCATED ON MEADOW LANE WITHIN THE PROJECT AREA. THEY ARE BOTH LOCATED ON THE OPPOSITE SIDE OF MEADOW LANE FROM THE WEST BRANCH OF THE LITTLE RIVER.

1.2.2 DRAINAGE, WATERWAYS, BODIES OF WATER, AND PROXIMITY TO NATURAL OR MAN-MADE WATER FEATURES

THE WEST BRANCH OF THE LITTLE RIVER IS THE ONLY WATER SOURCE ON THE PROJECT SITE. THE STREAM IS CHARACTERIZED AS SINUOUS, SEMI-ALLUVIAL, INCISED, AND WITH PAST DEGRADATION. THE STREAM BED CONSISTS OF GRAVEL, COBBLES, SOME BOULDERS, AND SOME LEDGE UPSTREAM. THE DRAINAGE AREA IS 23.8 SQUARE MILES.

1.2.3 VEGETATION

THE VEGETATION IN THE PROJECT AREA CONSISTS MOSTLY OF OPEN LANDSCAPED AREAS OUTSIDE OF THE RIVER BANK WITH ONLY A FEW TREES ALONG THE BIKE PATH AND THE INN LOCATED SOUTHWEST OF THE BRIDGE. THE RIVER BANK IS MORE DENSE WITH TREES OF VARIOUS TYPES AND SIZES.

1.2.4 SOILS

ALL SOIL DATA CAME FROM THE U.S. DEPARTMENT OF AGRICULTURE SOIL CONSERVATION SERVICE FOR THE COUNTY OF LAMOILLE, VERMONT. SOILS ON THE PROJECT SITE ARE: COLTON-DUXBURY COMPLEX, 2 TO 8 PERCENT SLOPES, “K FACTOR” = 0.17, LYMAN-TUNBRIDGE FINE SANDY LOAMS, VERY ROCKY, 25 TO 60 PERCENT SLOPES, “K FACTOR” = 0.28, AND PODUNK FINE SANDY LOAM, “K FACTOR” = 0.24.

NOTE: K-VALUES GENERALLY INDICATE THE FOLLOWING:
0.0-0.23 = LOW EROSION POTENTIAL
0.24-0.36 = MODERATE EROSION POTENTIAL
0.37 AND HIGHER = HIGH EROSION POTENTIAL

1.2.5 SENSITIVE RESOURCE AREAS

CRITICAL HABITATS: NO
HISTORICAL OR ARCHEOLOGICAL AREAS: YES. THE INN AND RESIDENCE LOCATED ON MEADOW LANE SOUTHEAST OF THE BRIDGE ARE HISTORICAL BUILDINGS.
PRIME AGRICULTURAL LAND: NO
THREATENED AND ENDANGERED SPECIES: NO
WATER RESOURCE: WEST BRANCH OF THE LITTLE RIVER
WETLANDS: NO

1.3 RISK EVALUATION

THIS PROJECT FALLS UNDER THE JURISDICTION OF GENERAL PERMIT 3-9020 FOR STORMWATER RUNOFF FROM CONSTRUCTION SITES FOR LOW RISK PROJECTS. ANY MODIFICATIONS TO THE PROJECT THAT INCREASE THE RISK TO ENVIRONMENTAL RESOURCES SHALL BE EVALUATED IN ACCORDANCE WITH THE PERMIT REQUIREMENTS. THE CONTRACTOR WILL BE RESPONSIBLE FOR ANY ADDITIONAL PERMITTING.

1.4 EROSION PREVENTION AND SEDIMENT CONTROL

THE EROSION CONTROL PLANS ARE MEANT AS A GUIDELINE FOR PREVENTING EROSION AND CONTROLLING SEDIMENT TRANSPORT. THE PRINCIPLES OUTLINED IN THIS NARRATIVE CONSIST OF APPLYING MEASURES THROUGHOUT CONSTRUCTION OF THE PROJECT IN ORDER TO MINIMIZE SEDIMENT TRANSPORT TO THE RECEIVING WATERS. THE MEASURES INCLUDE STABILIZATION AND STRUCTURAL PRACTICES, STORM WATER CONTROLS AND OTHER POLLUTION PREVENTION PRACTICES. THEY HAVE BEEN PROPOSED BY THE DESIGNER AS A BASIS FOR PROTECTING RESOURCES AND WILL NEED TO BE BUILT UPON BASED ON THE SPECIFIC MEANS AND METHODS OF THE CONTRACTOR. REFER TO THE LOW RISK SITE HANDBOOK AND APPROPRIATE DETAIL SHEETS FOR SPECIFIC GUIDANCE AND CONSTRUCTION DETAILING.

ALL MEASURES SHALL BE REGULARLY MAINTAINED AND SHALL BE CHECKED FOR SEDIMENT BUILD-UP. SEDIMENT SHALL BE DISPOSED OF AT AN APPROVED SITE WHERE IT WILL NOT BE SUBJECT TO EROSION.

1.4.1 MARK SITE BOUNDARIES

SITE BOUNDARIES AND AREAS CONSTRUCTION EQUIPMENT CAN ACCESS SHALL BE DELINEATED.

PROJECT DEMARCATION FENCING (PDF) SHALL BE USED TO PHYSICALLY MARK SITE BOUNDARIES. BECAUSE THIS PROJECT FALLS UNDER THE CGP 3-9020, BARRIER FENCE SHALL BE USED INSTEAD OF PROJECT DEMARCATION FENCE WITHIN 100 FEET OF A WATER RESOURCE (STREAM, BROOK, LAKE, POND, WETLAND, ETC).

1.4.2 LIMIT DISTURBANCE AREA

PREVENTING INITIAL SOIL EROSION BY MINIMIZING THE EXPOSED AREA IS MUCH MORE EFFECTIVE THAN TREATING ERODED SEDIMENT. EARTH DISTURBANCE CAN BE MINIMIZED THROUGH CONSTRUCTION PHASING BY ONLY OPENING UP EARTH AS NECESSARY. THIS CAN LIMIT THE AREA THAT WILL BE DISTURBED AND EXPOSED TO EROSION. EMPLOY TEMPORARY CONSTRUCTION STABILIZATION PRACTICES IN INCREMENTAL STAGES AS PHASES CHANGE. FOR PROJECTS WHICH FALL UNDER THE CONSTRUCTION GENERAL PERMIT, ONLY THE ACREAGE LISTED ON THE PERMIT AUTHORIZATION MAY BE EXPOSED AT ANY GIVEN TIME.

MAINTAINING VEGETATED BUFFERS ALONG STREAM BANKS, WETLANDS OR OTHER SENSITIVE AREAS IS A CRUCIAL EROSION AND SEDIMENT CONTROL MEASURE THAT SHOULD BE ESTABLISHED WHEREVER POSSIBLE.

1.4.3 SITE ENTRANCE/EXIT STABILIZATION

TRACKING OF SEDIMENT ONTO PUBLIC HIGHWAYS SHALL BE MINIMIZED TO REDUCE THE POTENTIAL FOR RUNOFF ENTERING RECEIVING WATERS. INSTALLATION SHALL COINCIDE WITH THE CONTRACTOR’S PROGRESS SCHEDULE.

STABILIZED CONSTRUCTION ENTRANCES SHALL BE PLACED ANYWHERE EQUIPMENT WILL BE GOING FROM AREAS OF EXPOSED SOILS TO PAVED SURFACES.

STABILIZED CONSTRUCTION ENTRANCES ARE NOT ANTICIPATED ON THIS PROJECT. THE EXISTING ROADWAY WILL BE USED TO ACCESS THE BRIDGE.

1.4.4 INSTALL SEDIMENT BARRIERS

SEDIMENT BARRIERS SHALL BE UTILIZED TO INTERCEPT RUNOFF AND ALLOW SUSPENDED SEDIMENT TO SETTLE OUT. THEY SHALL BE INSTALLED PRIOR TO ANY UP SLOPE WORK.

SILT FENCE WILL BE INSTALLED AS PROPOSED ON THE EPSC PLAN. BECAUSE THIS PROJECT FALLS UNDER THE CGP 3-9020, WOVEN WIRE REINFORCED SILT FENCE SHALL BE USED INSTEAD OF SILT FENCE WITHIN 100 FEET UPSLOPE OF RECEIVING WATERS.

FILTER CURTAINS WILL BE INSTALLED AS PROPOSED ON THE EPSC PLAN.

1.4.5 DIVERT UPLAND RUNOFF

DIVERSIONARY MEASURES SHALL BE USED TO INTERCEPT RUNOFF FROM ABOVE THE CONSTRUCTION AND DIRECT IT AROUND THE DISTURBED AREA SO THAT CLEAN WATER DOES NOT BECOME MUDDIED WHILE TRAVELING OVER EXPOSED SOILS ON THE CONSTRUCTION SITE.

THE PROJECT AREA IS RELATIVELY FLAT. THEREFORE IT IS NOT ANTICIPATED THAT DIVERSION MEASURES WILL BE NECESSARY.

1.4.6 SLOW DOWN CHANNELIZED RUNOFF

CHECK STRUCTURES SHALL BE UTILIZED TO REDUCE THE VELOCITY, AND THUS THE EROSIVE POTENTIAL, OF CONCENTRATED FLOW IN CHANNELS.

STONE CHECK DAMS ARE NOT ANTICIPATED TO BE NEEDED AS DESIGNED.

1.4.7 CONSTRUCT PERMANENT CONTROLS

PERMANENT STORMWATER TREATMENT DEVICES SHALL BE INSTALLED AS SHOWN ON THE PLANS AND IN ACCORDANCE WITH PERMIT CONDITIONS.

1.4.8 STABILIZE EXPOSED SOILS DURING CONSTRUCTION

ALL AREAS OF DISTURBANCE MUST HAVE TEMPORARY STABILIZATION IN PLACE WITHIN 48 HOURS OF DISTURBANCE OR IN ACCORDANCE WITH THE CONSTRUCTION GENERAL PERMIT 3-9020 AUTHORIZATION.

SURFACE ROUGHENING OF ALL EXPOSED SLOPES, COMBINED WITH TEMPORARY MULCHING, SHALL BE UTILIZED ON A REGULAR BASIS. BIODEGRADABLE EROSION CONTROL MATTING OR AN EQUIVALENT SHALL BE USED TO STABILIZE ALL SLOPES STEEPER THAN 1:3.

THE FORECAST OF RAINFALL EVENTS SHALL TRIGGER IMMEDIATE PROTECTION OF EXPOSED SOILS.

TEMPORARY EROSION CONTROL MATTING WILL BE INSTALLED AS PROPOSED ON THE EPSC PLAN, AT A MINIMUM.

1.4.9 WINTER STABILIZATION

VARIOUS MEASURES SPECIFIC TO WINTER MAY BE NECESSARY SHOULD THE PROJECT EXTEND INTO WINTER (OCTOBER 15 THROUGH APRIL 15). REFER TO THE LOW RISK SITE HANDBOOK FOR GUIDANCE.

1.4.10 STABILIZE SOIL AT FINAL GRADE

EXPOSED SOIL MUST BE STABILIZED WITHIN 48 HOURS OF REACHING FINAL GRADE.

SEED, MULCH, FERTILIZER AND LIME SHALL BE USED TO ESTABLISH PERMANENT VEGETATION. FOR SLOPES STEEPER THAN 1:3, BIODEGRADABLE EROSION CONTROL MATTING OR AN EQUIVALENT SHALL BE USED INSTEAD OF MULCH.

1.4.11 DE-WATERING ACTIVITIES

DISCHARGE FROM DEWATERING ACTIVITIES THAT FLOWS OFF OF THE CONSTRUCTION SITE MUST NOT CAUSE OR CONTRIBUTE TO A VIOLATION OF THE VERMONT WATER QUALITY STANDARDS.

1.4.12 INSPECT YOUR SITE

INSPECT THE PROJECT SITE BASED ON SPECIAL PROVISION REQUIREMENTS OR CONSTRUCTION GENERAL PERMIT AUTHORIZATION STIPULATIONS.

1.5 SEQUENCE AND STAGING

THIS SECTION WILL BE DEVELOPED BY THE CONTRACTOR USING THE GUIDANCE OUTLINED IN THE VTRANS EPSC PLAN CONTRACTOR CHECKLIST.

1.5.1 OFF-SITE ACTIVITIES

IN ADDITION TO THE CONTRACTOR CHECKLIST, ANY ACTIVITIES OUTSIDE THE CONSTRUCTION LIMITS SHALL FOLLOW SUBSECTION 105.25 - 105.29 OF THE STANDARD SPECIFICATIONS FOR CONSTRUCTION.

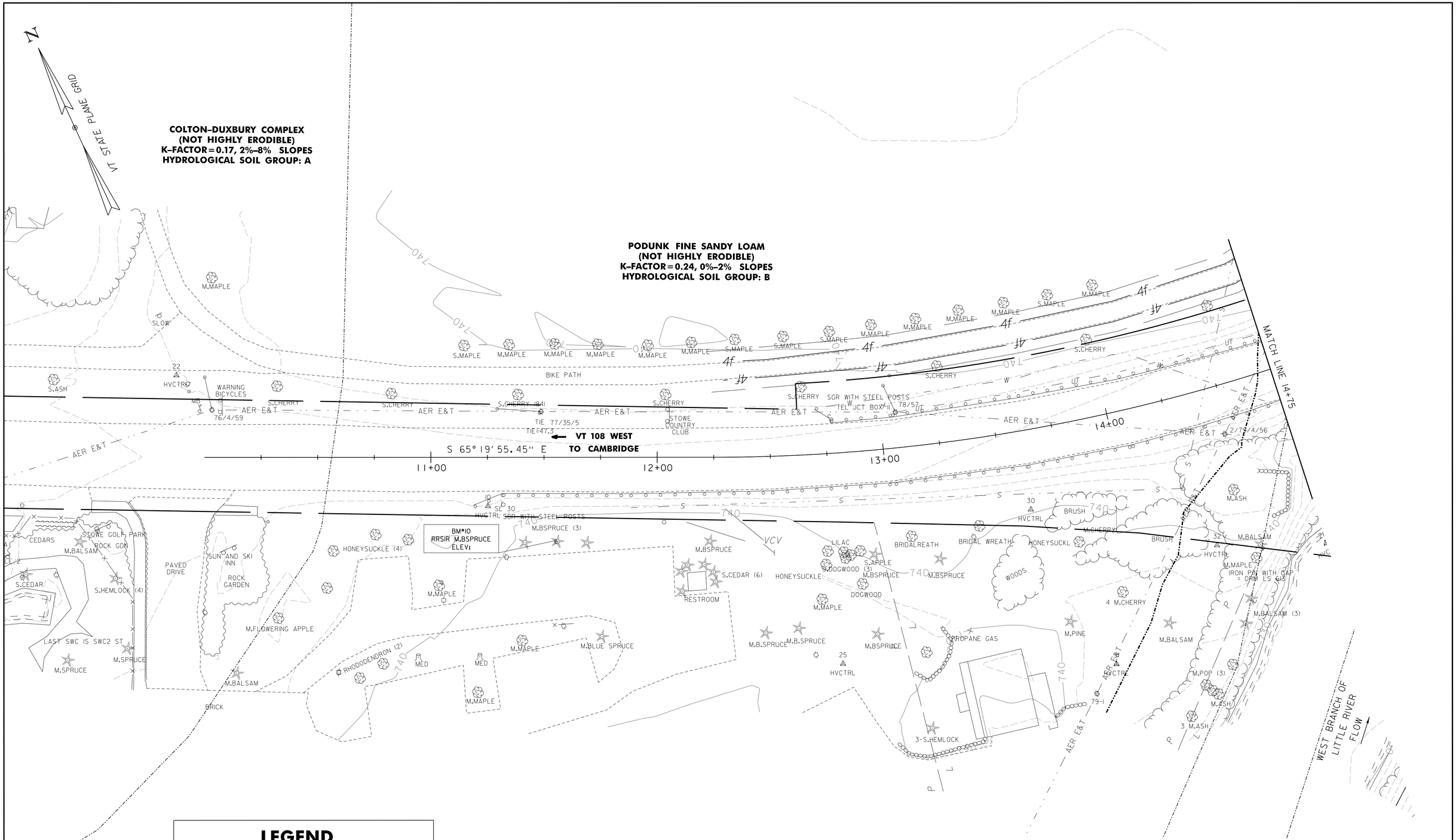

LEGEND

SOIL TYPE BOUNDARY

RIPARIAN BUFFER ZONE

CONSULTING ENGINEERS

PROJECT NAME: STOWE	
PROJECT NUMBER: BRF 0235(15)	
FILE NAME: z88cl90bdreroex.dgn	PLOT DATE: 3/9/2015
PROJECT LEADER: J. BYATT	DRAWN BY: S. FORTIER
DESIGNED BY: S. FORTIER	CHECKED BY: K. RUTTER
EPSC EXISTING CONDITIONS SHEET 1	SHEET 71 OF 79

MODEL: 01

CLD 12-0120

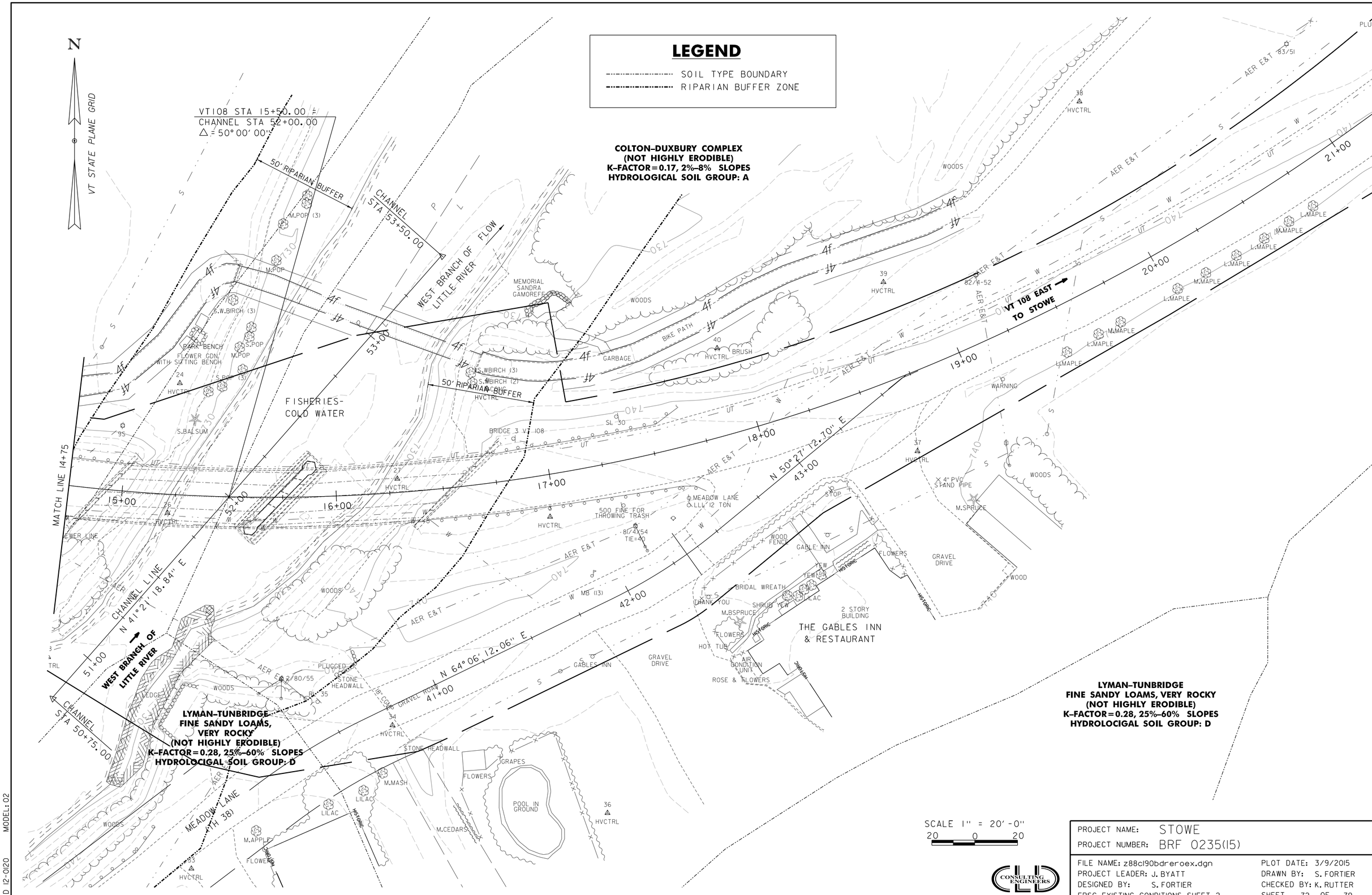

PROJECT NAME: STOWE	
PROJECT NUMBER: BRF 0235(15)	
FILE NAME: z88cl90bdrerOex.dgn	PLOT DATE: 3/9/2015
PROJECT LEADER: J. BYATT	DRAWN BY: S. FORTIER
DESIGNED BY: S. FORTIER	CHECKED BY: K. RUTTER
EPSC EXISTING CONDITIONS SHEET 2	SHEET 72 OF 79

CONSULTING ENGINEERS

CLD 12-0120 MODEL: 02

PROJECT DEMARCATION FENCE
10+12 TO 13+72 RT
10+00 TO 14+26 LT

TEMPORARY EROSION MATTING
13+00 TO 14+80 RT
13+00 TO 14+75 LT

BARRIER FENCE
14+26 TO 14+75 LT

GEOTEXTILE FOR SILT FENCE
10+00 TO 14+25 LT
10+12 TO 13+75 RT

GEOTEXTILE FOR SILT FENCE, WOVEN WIRE REINFORCED
14+25 TO 14+75 LT
13+75 TO 14+65 RT

GEOTEXTILE FOR FILTER CURTAIN
14+62 TO 14+75 RT

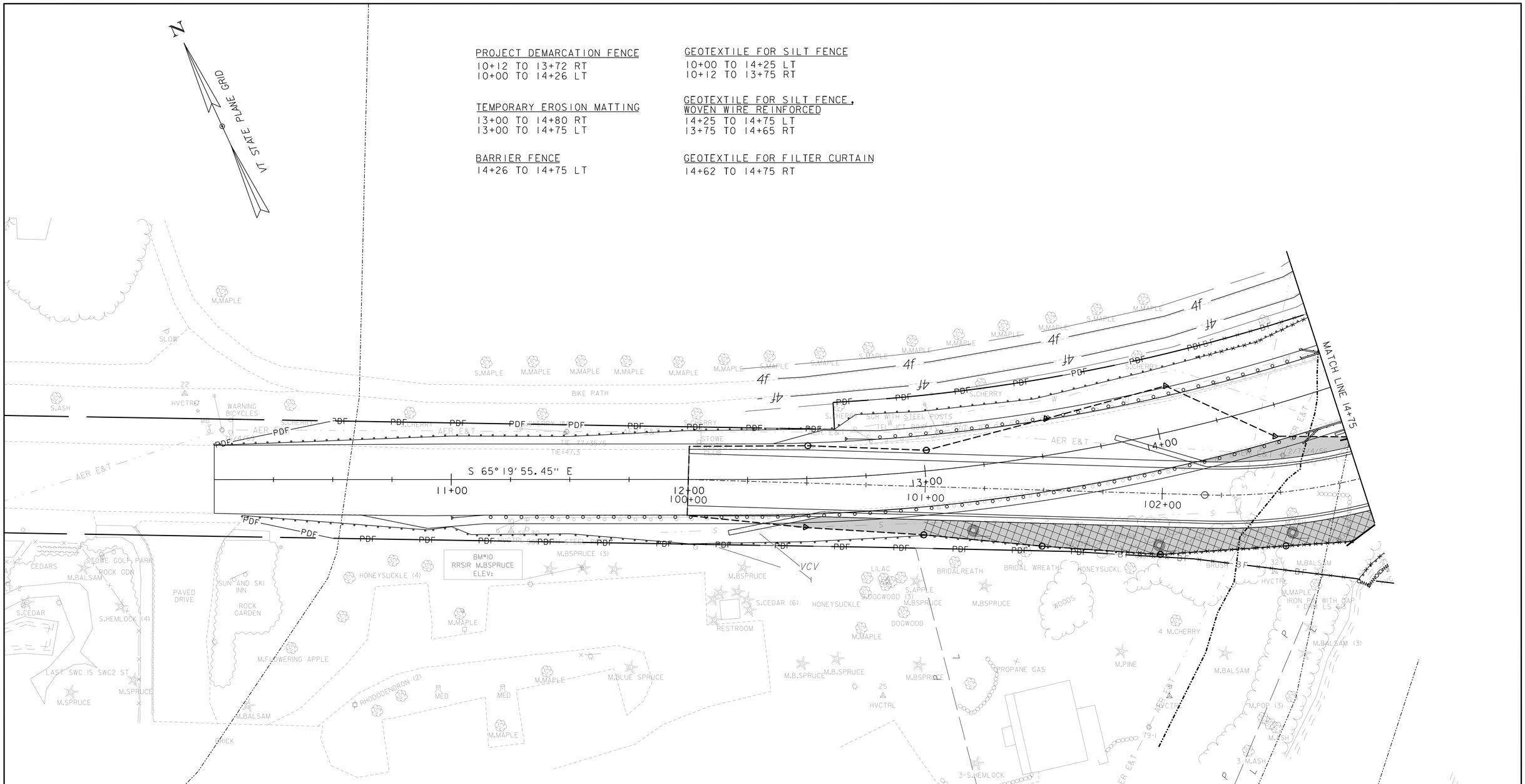

LEGEND

- PDF——PDF PROJECT DEMARCATION FENCE
- BF —×—×—×— BF BARRIER FENCE
- SILT FENCE
- SILT FENCE WOVEN WIRE
- DISTURBED AREAS REQUIRING TEMPORARY RE-VEGETATION
- TEMPORARY EROSION MATTING
- SOIL TYPE BOUNDARY
- RIPARIAN BUFFER ZONE
- FILTER CURTAIN

SCALE 1" = 20'-0"
20 0 20

79-2

CONSULTING ENGINEERS

PROJECT NAME: STOWE	
PROJECT NUMBER: BRF 0235(15)	
FILE NAME: z88cl90bdrerocn.dgn	PLOT DATE: 3/9/2015
PROJECT LEADER: J. BYATT	DRAWN BY: S. FORTIER
DESIGNED BY: S. FORTIER	CHECKED BY: K. RUTTER
EPSC CONSTRUCTION PLAN SHEET 1	SHEET 73 OF 79

MODEL: 01
CLD 12-0120

PROJECT DEMARCATION FENCE
18+66 TO 21+00 RT
17+73 TO 21+00 LT
40+35 TO 41+81 RT
42+22 TO 43+14 RT

BARRIER FENCE
14+75 TO 15+60 LT
16+44 TO 17+73 LT

GEOTEXTILE FOR SILT FENCE
WOVEN WIRE REINFORCED
16+64 TO 17+74 LT
50+80 TO 52+50 LT (CHANNEL)
51+50 TO 52+90 RT (CHANNEL)

GEOTEXTILE FOR SILT FENCE
17+74 TO 21+00 RT

GEOTEXTILE FOR FILTER CURTAIN
50+80 TO 52+50 LT
51+50 TO 52+90 RT

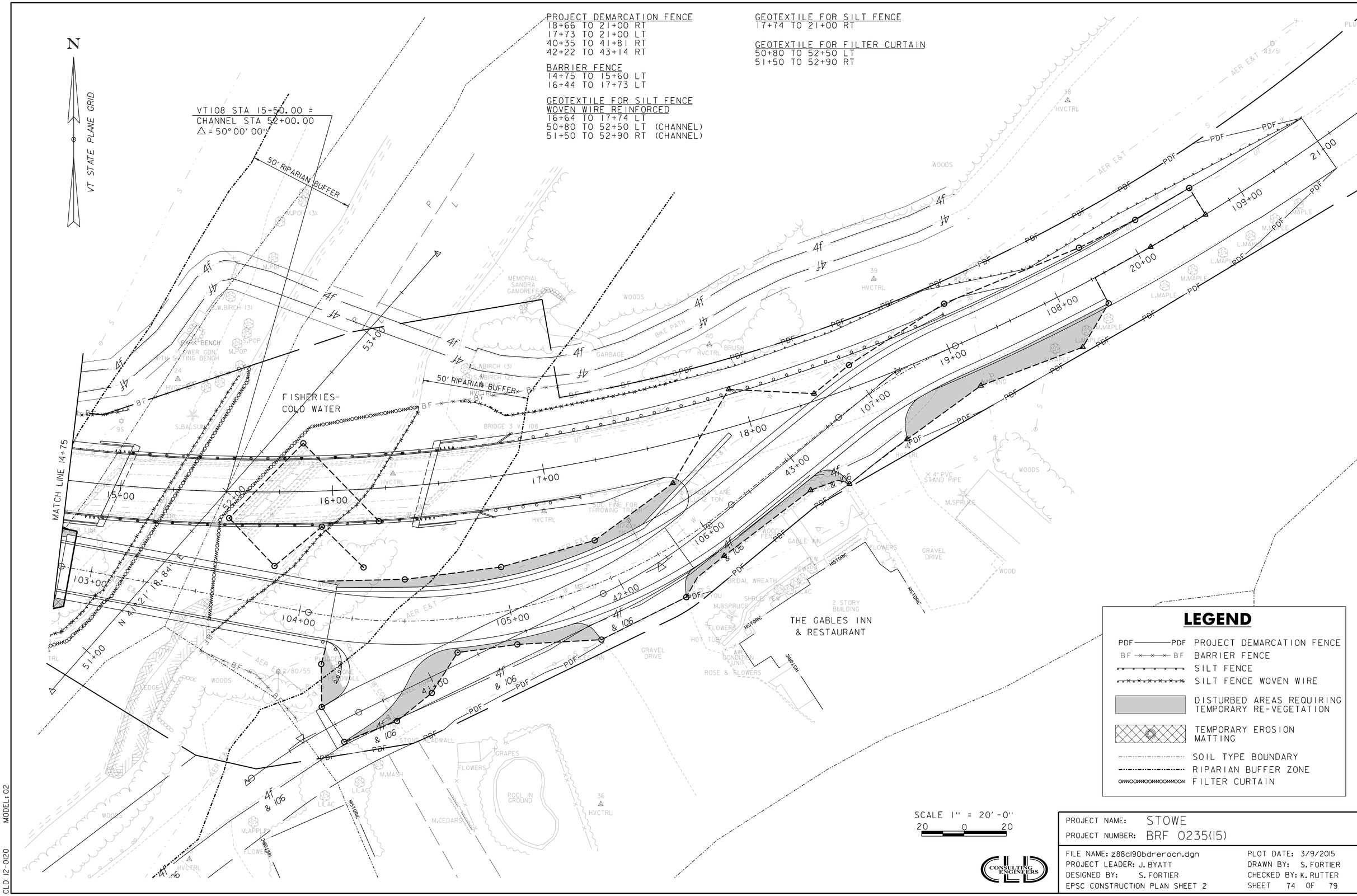

LEGEND

PDF——PDF	PROJECT DEMARCATION FENCE
BF —×—×— BF	BARRIER FENCE
	SILT FENCE
	SILT FENCE WOVEN WIRE
	DISTURBED AREAS REQUIRING TEMPORARY RE-VEGETATION
	TEMPORARY EROSION MATTING
	SOIL TYPE BOUNDARY
	RIPARIAN BUFFER ZONE
	FILTER CURTAIN

SCALE 1" = 20'-0"
20 0 20

CONSULTING ENGINEERS

PROJECT NAME: STOWE	
PROJECT NUMBER: BRF 0235(15)	
FILE NAME: z88c190bdrerocn.dgn	PLOT DATE: 3/9/2015
PROJECT LEADER: J. BYATT	DRAWN BY: S. FORTIER
DESIGNED BY: S. FORTIER	CHECKED BY: K. RUTTER
EPSC CONSTRUCTION PLAN SHEET 2	SHEET 74 OF 79

CLD 12-0120 MODEL: 02

PERMANENT EROSION MATTING
13+00 TO 14+75 LT
13+00 TO 14+71 RT

N
VT STATE PLANE GRID

PROPOSED 12" WATER
BY OTHERS

MATCH LINE 14+75

EXISTING STATE
RIGHT-OF-WAY

WEST BRANCH OF
LITTLE RIVER
FLOW

11+00
12+00
100+00
13+00
101+00
14+00
102+00

LEGEND

- SOIL TYPE BOUNDARY
- RIPARIAN BUFFER ZONE
- DISTURBED AREAS REQUIRING RE-VEGETATION
- PERMANENT EROSION MATTING
- STONE FILL, TYPE II

NOTES:

1. SEE CROSS SECTIONS FOR FINISHED GRADING.

SCALE 1" = 20'-0"
20 0 20

CONSULTING ENGINEERS

PROJECT NAME: STOWE	
PROJECT NUMBER: BRF 0235(15)	
FILE NAME: z88cl90bdrerofl.dgn	PLOT DATE: 3/9/2015
PROJECT LEADER: J. BYATT	DRAWN BY: S. FORTIER
DESIGNED BY: S. FORTIER	CHECKED BY: K. RUTTER
EPSC FINAL PLAN SHEET 1	SHEET 75 OF 79

MODEL: 01
CLD 12-0120

LEGEND

- SOIL TYPE BOUNDARY
- RIPARIAN BUFFER ZONE
- DISTURBED AREAS REQUIRING RE-VEGETATION
- PERMANENT EROSION MATTING
- STONE FILL, TYPE II

PERMANENT EROSION MATTING
14+75 TO 15+04 LT
17+00 TO 18+50 LT

N

VT STATE PLANE GRID

VT108 STA 15+50.00 =
CHANNEL STA 52+00.00
Δ = 50° 00' 00"

50' RIPARIAN BUFFER

CHANNEL STA 53+50.00

WEST BRANCH OF LITTLE RIVER

PROPOSED 12" WATER BY OTHERS

EXISTING TOWN RIGHT-OF-WAY

EXISTING STATE RIGHT-OF-WAY

FISHERIES-COLD WATER

MATCH LINE 14+75

CHANNEL LINE N 41° 21' 18.84" E

N 50° 27' 12.70" E

N 64° 00' 12.06" E

REMOVE 18" CGMP

CHANNEL STA 50+75.00

MEADOW LANE (TH 38)

THE GABLES INN & RESTAURANT

40+71.9 RT - 40+49.3 LT
NEW (8"x52') CPEP(SL)
W/ ES AT OUTLET
CONSTRUCT RC STRAIGHT
HW @ INLET, TYPE II
STONE FILL, TYPE II
AT OUTLET (3'x6')

SCALE 1" = 20'-0"
20 0 20

CONSULTING ENGINEERS

PROJECT NAME: STOWE	
PROJECT NUMBER: BRF 0235(15)	
FILE NAME: z88cl90bdrerofl.dgn	PLOT DATE: 3/9/2015
PROJECT LEADER: J. BYATT	DRAWN BY: S. FORTIER
DESIGNED BY: S. FORTIER	CHECKED BY: K. RUTTER
EPSC FINAL PLAN SHEET 2	SHEET 76 OF 79

CLD 12-0120 MODEL: 02

VAOT RURAL AREA MIX

	LBS/AC				
% WEIGHT	BROADCAST	HYDROSEED	NAME	GERM %	PURITY %
37.5%	22.5	45	CREEPING RED FESCUE	85%	98%
37.5%	22.5	45	TALL FESCUE	90%	95%
5.0%	3	6	RED TOP	90%	95%
15.0%	9	18	BIRDSFOOT TREFOIL	85%	98%
5.0%	3	6	ANNUAL RYE GRASS	85%	95%
100%	60	120			

VAOT URBAN AREA MIX

	LBS/AC				
% WEIGHT	BROADCAST	HYDROSEED	NAME	GERM %	PURITY %
42.5%	34	68	CREEPING RED FESCUE	85%	98%
10.0%	8	16	PERENNIAL RYE GRASS	90%	95%
42.5%	34	68	KENTUCKY BLUE GRASS	85%	85%
5.0%	4	8	ANNUAL RYE GRASS	85%	95%
100%	80	160			

SOIL AMENDMENT GUIDANCE

FERTILIZER		LIME	
BROADCAST	HYDROSEED	BROADCAST	HYDROSEED
10-20-10	*FOLLOW*	PELLETIZED	*FOLLOW*
500 LBS/AC	*MANUFACTURER*	2 TONS/AC	*MANUFACTURER*

CONSTRUCTION GUIDANCE

1. RURAL SEED MIX: USE AS INDICATED IN THE PLANS AND/OR FOR ALL ESTABLISHED UPLAND (NON WETLAND) AREAS DISTURBED BY THE CONTRACTOR.
2. URBAN SEED MIX: USE AS INDICATED IN THE PLANS AND/OR FOR ALL ESTABLISHED LAWN AREAS DISTURBED BY THE CONTRACTOR.
3. ALL SEED MIXTURES: SHALL NOT HAVE A WEED CONTENT EXCEEDING 0.40% BY WEIGHT AND SHALL BE FREE OF ALL NOXIOUS SEED.
4. FERTILIZER AND LIMESTONE: SHALL FOLLOW RATES SHOWN ON PLAN OR AS DIRECTED BY THE ENGINEER.
5. HAY MULCH: TO BE PLACED ON EARTH SLOPES AT THE RATE OF 2 TONS/ACRE, ACHIEVE 90% GROUND COVER OR AS DIRECTED BY THE ENGINEER.
6. TOPSOIL: TO BE USED WITH SEED AS INDICATED ON THE PLANS, OR AS DIRECTED BY THE ENGINEER.
7. HYDROSEEDING: ALTHOUGH GUIDANCE IS GIVEN ABOVE THE SITE CONDITIONS AND THE TYPE OF HYDROSEED WILL ULTIMATELY DICTATE THE AMOUNTS AND TYPES OF SOIL AMENDMENTS TO BE APPLIED.
8. TURF ESTABLISHMENT: PLACING SEED, FERTILIZER, LIME AND MULCH PRIOR TO SEPTEMBER 15 AND AFTER APRIL 15 CAN BETTER ENSURE A VIGOROUS GROWTH OF GRASS.

ADAPTED FROM VTRANS TECHNICAL LANDSCAPE MANUAL FOR ROADWAYS AND TRANSPORTATION FACILITIES

TURF ESTABLISHMENT

REVISIONS	
JUNE 23, 2009	WHF
JANUARY 15, 2010	WHF
FEBRUARY 16, 2011	WHF

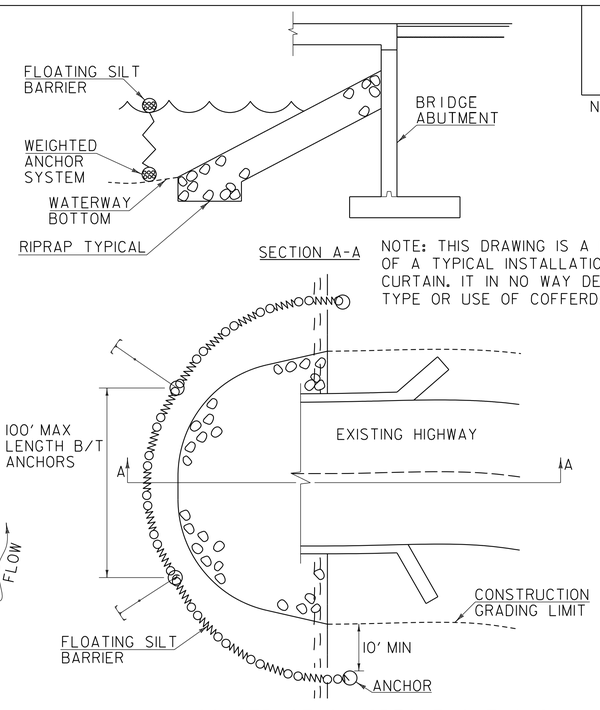

CONSTRUCTION SPECIFICATIONS

1. FILTER CURTAIN SHALL NOT BE PLACED ACROSS A FLOWING WATERWAY, OR IN A WATERWAY WITH STREAM VELOCITIES GREATER THAN 1.5 FEET/SECOND.
2. MAXIMUM 100' LENGTH BETWEEN ANCHORS.
3. LAST SECTION SHALL TERMINATE A MINIMUM OF 10' BEYOND LIMIT OF DISTURBANCE.
4. THE WEIGHTED ANCHOR SYSTEM SHALL BE A TYPE WHICH ALLOWS THE CURTAIN TO CONFORM TO THE BOTTOM OF THE WATERWAY.
5. THE CURTAIN SHALL BE REMOVED BY SLOWLY PULLING TOWARD THE SHORE MINIMIZING THE ESCAPE OF SEDIMENTS INTO WATERWAY.

FILTER CURTAIN

THIS WORK SHALL BE PERFORMED IN ACCORDANCE WITH SECTION 649 FOR GEOTEXTILE FOR FILTER CURTAIN (PAY ITEM 649.61).

REVISIONS	
APRIL 1, 2008	WHF
JANUARY 13, 2009	WHF
SEPTEMBER 4, 2009	WHF

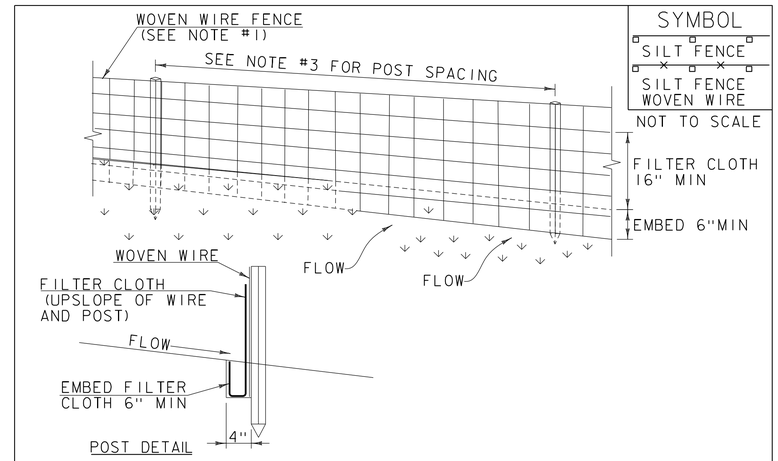

CONSTRUCTION SPECIFICATIONS

1. WOVEN WIRE REINFORCED FENCE IS REQUIRED WITHIN 100' UPSLOPE OF RECEIVING WATERS WHEN THE PROJECT FALLS UNDER A CONSTRUCTION STORMWATER PERMIT. WOVEN WIRE SHALL BE A MIN. 14 GAUGE WITH A 6" MAX. MESH OPENING.
2. FILTER CLOTH SHALL BE EITHER FILTER X, MIRAFI100X, STABILINKA T140N OR APPROVED EQUIVALENT.
3. POST SPACING FOR WIRE-BACKED FENCE SHALL BE 10' MAXIMUM. FOR FILTER-CLOTH FENCE, WHEN ELONGATION IS >50%, POST SPACING SHALL NOT EXCEED 4' AND WHEN ELONGATION IS <50%, POST SPACING SHALL NOT EXCEED 6'.
4. WOVEN WIRE FENCE IS TO BE FASTENED SECURELY TO FENCE POSTS WITH WIRE TIES. FILTER CLOTH IS TO BE FASTENED SECURELY TO WOVEN WIRE FENCE WITH TIES SPACED EVERY 24" AT TOP AND MID SECTION.
5. WHEN TWO SECTIONS OF FILTER CLOTH ADJOIN EACH OTHER THEY SHALL BE OVER-LAPPED BY 6" AND FOLDED.
6. MAINTENANCE SHALL BE PERFORMED AS NEEDED AND MATERIAL REMOVED WHEN SEDIMENT REACHES HALF OF FABRIC HEIGHT.

ADAPTED FROM DETAILS PROVIDED BY: NEW YORK STATE DEC
ORIGINALLY DEVELOPED BY USDA-NRCS
VERMONT DEPARTMENT OF ENVIRONMENTAL CONSERVATION

SILT FENCE

NOTES:
REFER TO "THE VERMONT STANDARDS & SPECIFICATIONS FOR EROSION PREVENTION & SEDIMENT CONTROL -2006- "FROM THE VT AGENCY OF NATURAL RESOURCES FOR ADDITIONAL GUIDANCE.

THIS WORK SHALL BE PERFORMED IN ACCORDANCE WITH SECTION 649 AND AS SHOWN IN THE PLANS FOR GEOTEXTILE FOR SILT FENCE (PAY ITEM 649.51) OR GEOTEXTILE FOR SILT FENCE, WOVEN WIRE REINFORCED (PAY ITEM 649.515).

REVISIONS	
MARCH 21, 2008	WHF
DECEMBER 11, 2008	WHF
JANUARY 13, 2009	WHF

CLD 12-0120 MODEL: 02

CONSULTING ENGINEERS

PROJECT NAME: STOWE
PROJECT NUMBER: BRF 0235(15)

FILE NAME: z88c190erodet.dgn
PROJECT LEADER: J. BYATT
DESIGNED BY: S. FORTIER
EPSC DETAILS 1

PLOT DATE: 3/9/2015
DRAWN BY: S. FORTIER
CHECKED BY: K. RUTTER
SHEET 77 OF 79

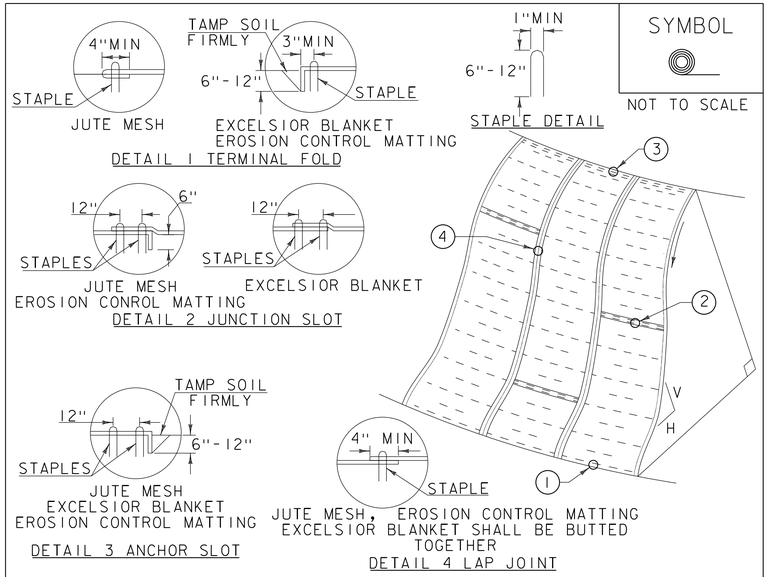

SYMBOL

NOT TO SCALE

CONSTRUCTION SPECIFICATIONS

1. APPLY TO SLOPES GREATER THAN 3H:1V OR WHERE NECESSARY TO AID IN ESTABLISHING VEGETATION.
2. APPLY FERTILIZER, LIME AND SEED PRIOR TO PLACING MATTING.
3. STAPLES ARE TO BE PLACED ALTERNATELY, IN COLUMNS APPROXIMATELY 2' APART AND IN ROWS APPROXIMATELY 3' APART. APPROXIMATELY 175 STAPLES ARE REQUIRED PER 4'X225' ROLL OF MATERIAL AND 125 STAPLES ARE REQUIRED PER 4'X150' ROLL OF MATERIAL.
4. DISTURBED AREAS SHALL BE SMOOTHLY GRADED. EROSION CONTROL MATERIAL SHALL BE PLACED LOOSELY OVER GROUND SURFACE. DO NOT STRETCH.
5. ALL TERMINAL ENDS AND TRANSVERSE LAPS SHALL BE STAPLED AT APPROXIMATELY 12" INTERVALS.

ADAPTED FROM DETAILS PROVIDED BY: NEW YORK STATE DEC
ORIGINALLY DEVELOPED BY USDA-NRCS
VERMONT DEPARTMENT OF ENVIRONMENTAL CONSERVATION

ROLLED EROSION CONTROL PRODUCT (RECP) SIDE SLOPE

NOTES:
REFER TO "THE VERMONT STANDARDS & SPECIFICATIONS FOR EROSION PREVENTION & SEDIMENT CONTROL -2006- "FROM THE VT AGENCY OF NATURAL RESOURCES FOR ADDITIONAL GUIDANCE.
THIS WORK SHALL BE PERFORMED IN ACCORDANCE WITH SECTION 653 AND AS SHOWN IN THE PLANS FOR TEMPORARY EROSION MATTING (PAY ITEM 653.20) OR PERMANENT EROSION MATTING (PAY ITEM 653.21).

REVISIONS	
APRIL 16, 2007	JMF
JANUARY 13, 2009	WHF

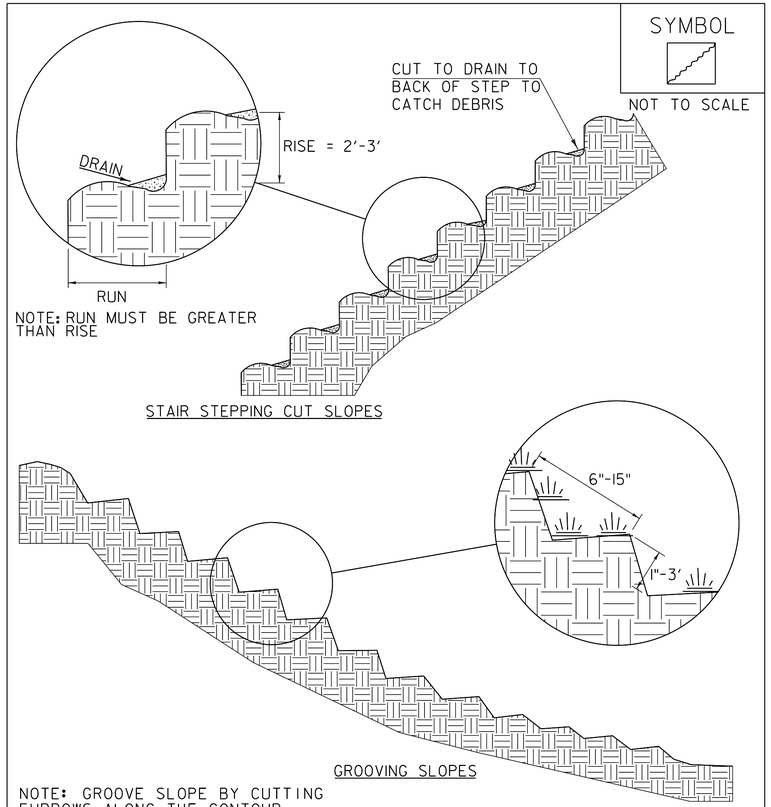

SYMBOL

NOT TO SCALE

NOTE: RUN MUST BE GREATER THAN RISE

NOTE: GROOVE SLOPE BY CUTTING FURROWS ALONG THE CONTOUR. IRREGULARITIES IN THE SOIL SURFACE CATCH RAINWATER AND RETAIN LIME, FERTILIZER AND SEED.

ADAPTED FROM DETAILS PROVIDED BY: NEW YORK STATE DEC
ORIGINALLY DEVELOPED BY USDA-NRCS
VERMONT DEPARTMENT OF ENVIRONMENTAL CONSERVATION

SURFACE ROUGHENING

NOTES:
REFER TO "THE VERMONT STANDARDS & SPECIFICATIONS FOR EROSION PREVENTION & SEDIMENT CONTROL -2006- "FROM THE VT AGENCY OF NATURAL RESOURCES FOR ADDITIONAL GUIDANCE.

THIS WORK SHALL BE CONSIDERED INCIDENTAL TO THE CONTRACT

REVISIONS	
APRIL 1, 2008	WHF
JANUARY 13, 2009	WHF

CONSULTING ENGINEERS

PROJECT NAME: STOWE
PROJECT NUMBER: BRF 0235(15)

FILE NAME: z88c190erodet.dgn
PROJECT LEADER: J. BYATT
DESIGNED BY: S. FORTIER
EPSC DETAILS 2

PLOT DATE: 3/9/2015
DRAWN BY: S. FORTIER
CHECKED BY: K. RUTTER
SHEET 78 OF 79

CLD 12-0120 MODEL: 03

Town of Stowe
Gables Bridge Water Main Relocation
Plan View

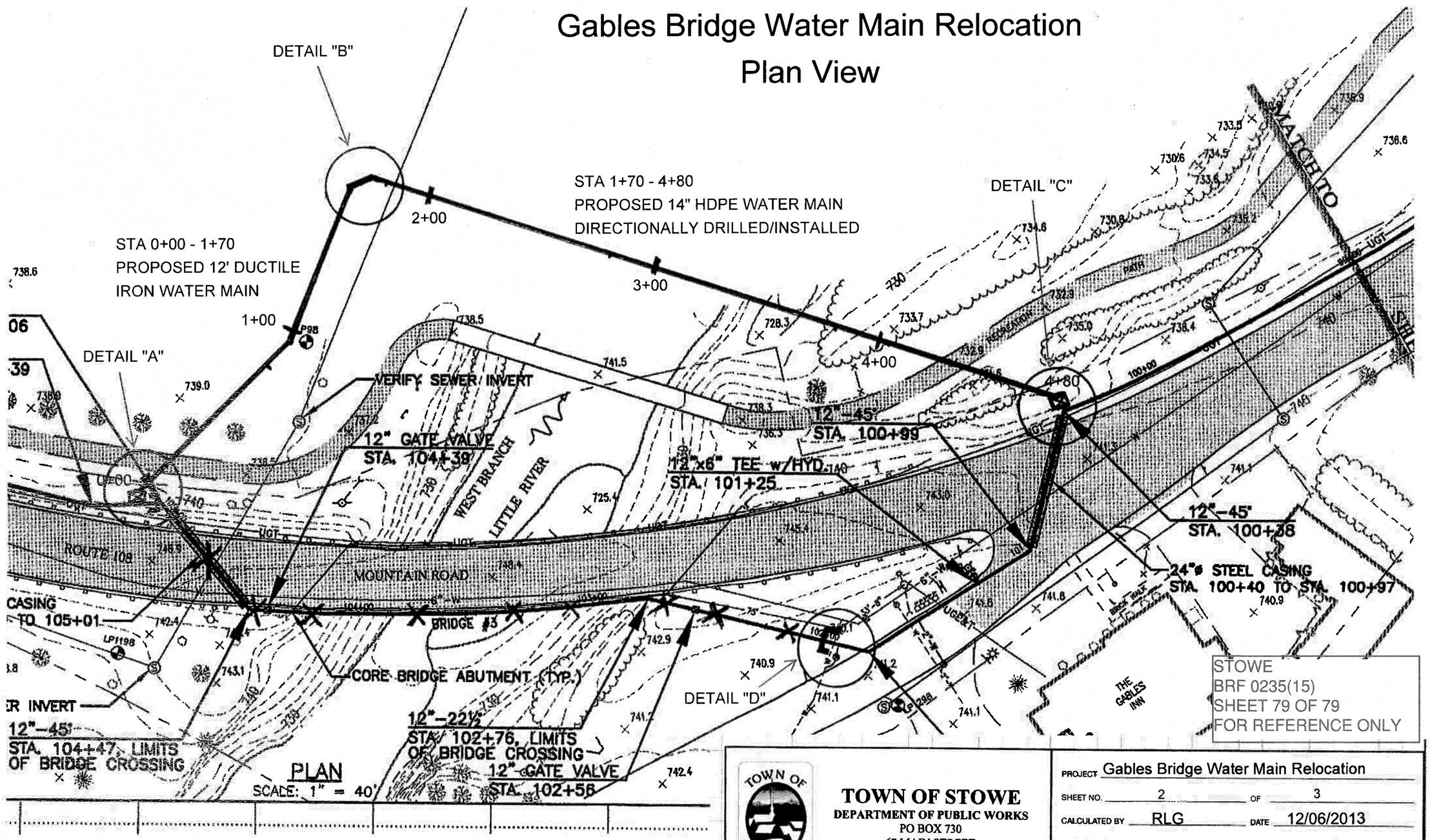

STOWE
BRF 0235(15)
SHEET 79 OF 79
FOR REFERENCE ONLY

TOWN OF STOWE
DEPARTMENT OF PUBLIC WORKS
PO BOX 730
67 MAIN STREET
STOWE, VT 05672

PROJECT	Gables Bridge Water Main Relocation
SHEET NO. 2	OF 3
CALCULATED BY RLG	DATE 12/06/2013
CHECKED BY	DATE
SCALE 1" = 40'	PROJECT NO. 12013.01

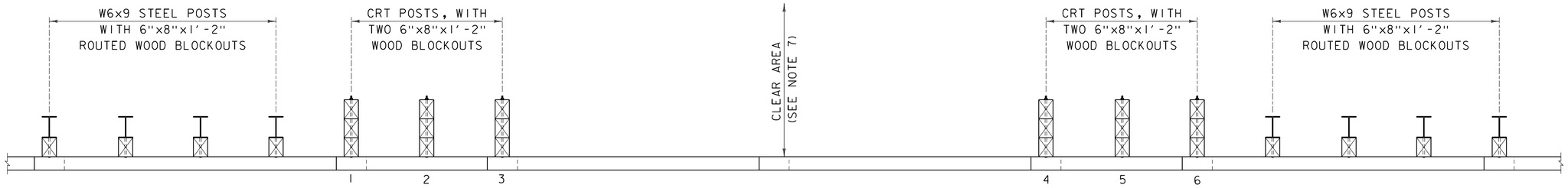

LONGSPAN STEEL BEAM GUARDRAIL PLAN

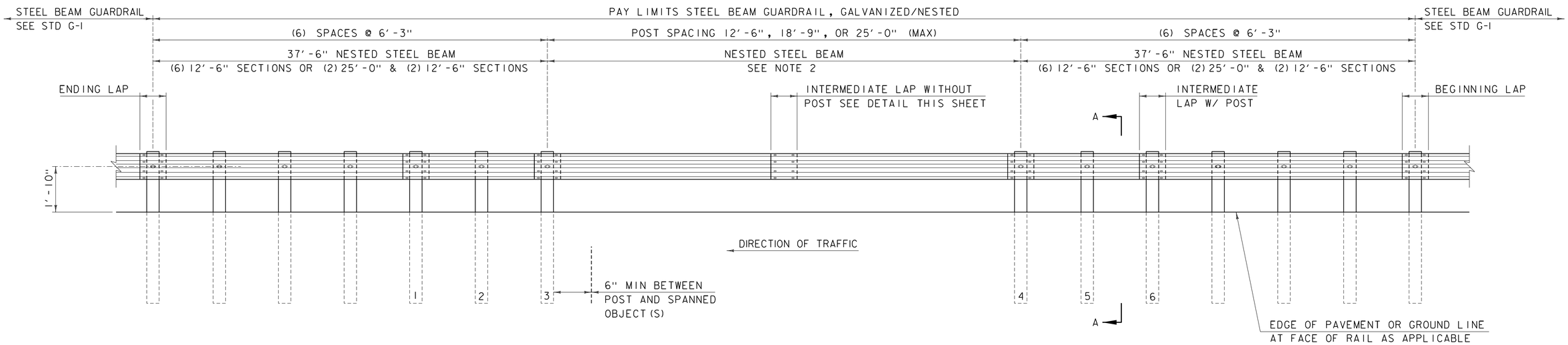

LONGSPAN STEEL BEAM GUARDRAIL ELEVATION

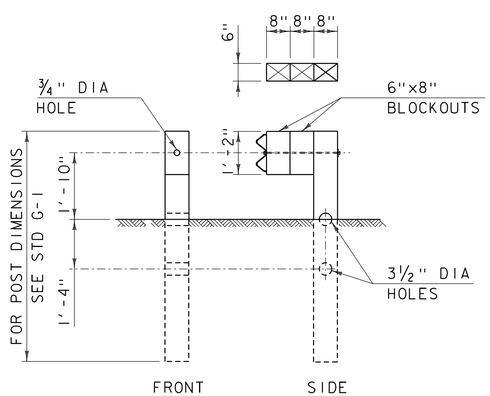

SECTION A-A

SECTION A-A TYPICAL FOR POST 1-6.
SEE NOTES 3 AND 4

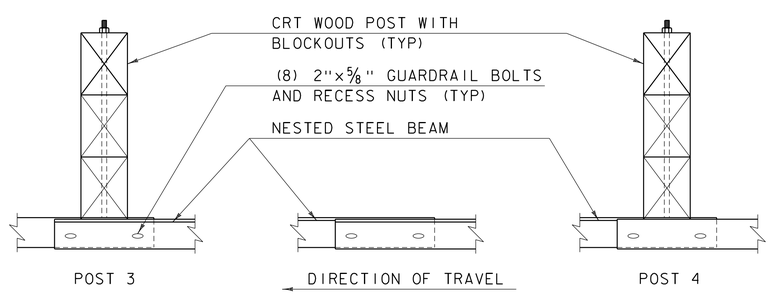

INTERMEDIATE LAP WITHOUT POST

NOTES:

1. RAIL MEETS TEST LEVEL 3 REQUIREMENTS OF NCHRP REPORT 350.
2. THERE SHALL BE NO MORE THAN ONE SPLICE IN THE LONGSPAN LOCATION.
3. POSTS 1 THRU 6 ARE BREAKAWAY CONTROLLED RELEASING TERMINAL (CRT) POSTS.
4. POSTS 1 THRU 6 HAVE TWO 6"x8" BLOCKOUTS.
5. ON POSTS 1 THRU 6, GUARDRAIL BOLT "D", AS SHOWN ON STD G1, SHALL BE 26" LONG.
6. ON ALL POSTS WHERE THE RAIL IS NESTED GUARDRAIL BOLT "A", AS SHOWN ON STD G1, SHALL BE 2" LONG.
7. CLEAR AREA BEHIND BACK OF RAIL SHALL BE:
   5'-0" MINIMUM FOR OBSTRUCTIONS LESS THAN OR EQUAL TO THE HEIGHT OF RAIL.
   6'-0" FOR OBSTRUCTIONS TALLER THAN THE TOP OF RAIL.
8. W6x9 STEEL POST MAY BE REPLACED WITH CRT WOOD POST WITH THE APPROVAL OF THE ENGINEER.
9. ALL MATERIALS NECCISSARY FOR THE ASSEMBLY OF THE RAIL MUST MEET THE REQUIREMENTS OF STD G-1 UNLESS OTHERWISE NOTED.
10. GUARDRAIL SECTIONS SHALL BE LAPPED IN THE DIRECTION OF TRAFFIC FLOW FOR THE LANE NEAREST THE GUARDRAIL.

REVISIONS

NOVEMBER 25, 2013	APPROVED FOR USE BY VAOT STRUCTURES SECTION
JANUARY 3, 2014	APPROVED FOR USE BY VAOT STRUCTURES SECTION

LONGSPAN STEEL BEAM GUARDRAIL, GALVANIZED

VERMONT AGENCY OF TRANSPORTATION
STRUCTURES - SECTION

STRUCTURES DETAIL

SD-366.00

CONCRETE GENERAL NOTES

1. ALL EXPOSED EDGES OF CONCRETE SHALL BE CHAMFERED 1" x 1"
2. REINFORCING STEEL SIZE AND SPACING SHOWN IN THE PLANS IS BASED ON 60 KSI STEEL, UNLESS NOTED OTHERWISE. WITH THE ENGINEER'S PERMISSION, BAR SIZE AND SPACING MAY BE MODIFIED ACCORDING TO THE LATEST AASHTO LRFD BRIDGE DESIGN SPECIFICATION AND STRUCTURES DESIGN MANUAL WHEN USING HIGHER STRENGTH STEEL.

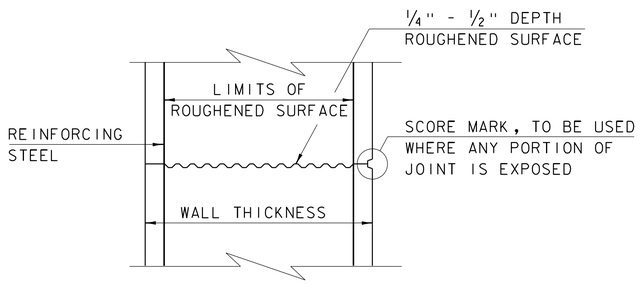

TYPICAL HORIZONTAL CONSTRUCTION JOINT

(NOT TO SCALE)

1. THE SURFACE OF THE CONCRETE CONSTRUCTION JOINTS SHALL BE CLEANED AND FREE OF LAITANCE.
2. IMMEDIATELY BEFORE NEW CONCRETE IS PLACED, ALL CONSTRUCTION JOINTS SHALL BE WETTED AND STANDING WATER REMOVED.

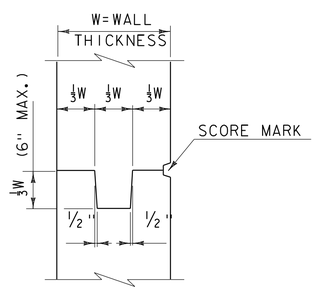

TYPICAL CONCRETE CONSTRUCTION JOINT

(NOT TO SCALE)

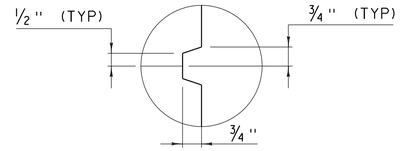

SCORE MARK DETAIL

(NOT TO SCALE)

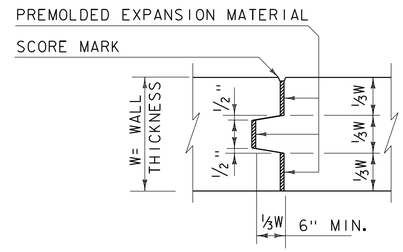

TYPICAL CONCRETE EXPANSION JOINT

(NOT TO SCALE)

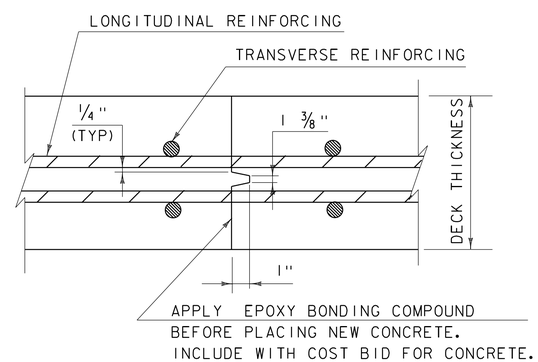

TRANSVERSE BRIDGE SLAB CONSTRUCTION JOINT DETAILS

(NOT TO SCALE)

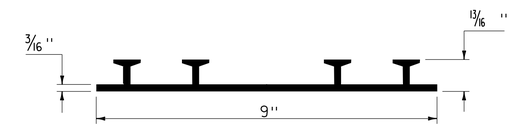

P.V.C. WATERSTOP FOR CONSTRUCTION JOINTS

(NOT TO SCALE)

PAYMENT FOR THE P.V.C. WATERSTOP SHALL BE INCIDENTAL TO THE UNIT BID PRICE FOR THE ADJACENT CONCRETE.

OTHER CONFIGURATIONS OF WATERSTOP MAY BE USED UPON APPROVAL OF THE ENGINEER.

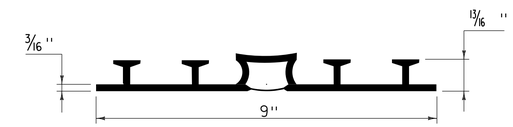

P.V.C. WATERSTOP FOR EXPANSION JOINTS

(NOT TO SCALE)

PAYMENT FOR THE P.V.C. WATERSTOP SHALL BE INCIDENTAL TO THE UNIT BID PRICE FOR THE ADJACENT CONCRETE.

OTHER CONFIGURATIONS OF WATERSTOP MAY BE USED UPON APPROVAL OF THE ENGINEER.

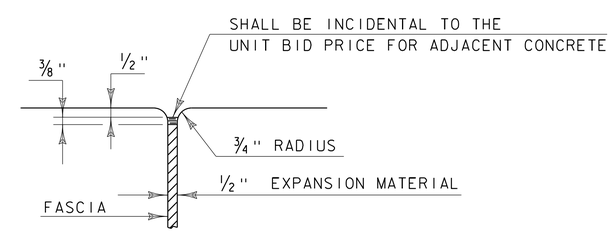

JOINT BETWEEN FASCIA AND WINGWALL

(NOT TO SCALE)

REVISIONS	
MAY 7, 2010	APPROVED FOR USE BY VAOT STRUCTURES SECTION
FEBRUARY 9, 2012	REBAR SUBSTITUTION ALLOWANCE ADDED TO CONCRETE GENERAL NOTES.

CONCRETE DETAILS AND NOTES

VERMONT AGENCY OF TRANSPORTATION
STRUCTURES SECTION

STRUCTURES DETAIL

SD-501.00

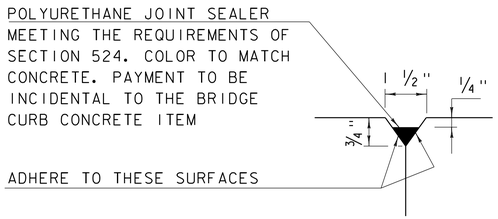

DETAIL "B"
(NOT TO SCALE)

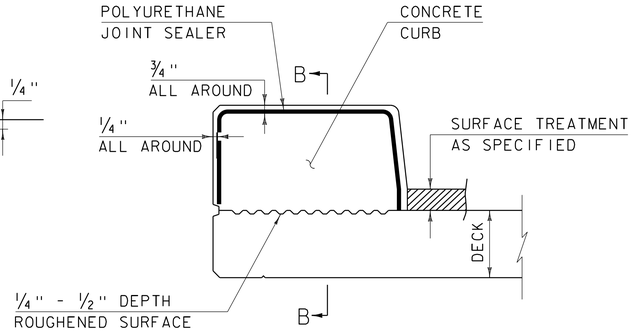

CONCRETE CURB JOINT SECTION
(NOT TO SCALE)

1. SEE TYPICAL HORIZONTAL CONSTRUCTION JOINT DETAIL FOR ADDITIONAL INFORMATION

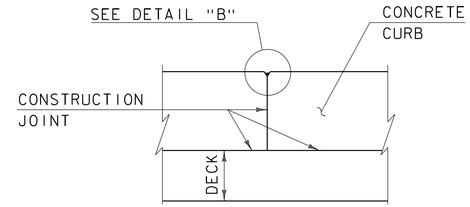

SECTION B - B
(NOT TO SCALE)

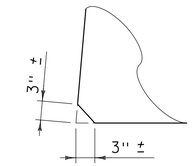

ACUTE ANGLE CLIP DETAIL
(NOT TO SCALE)

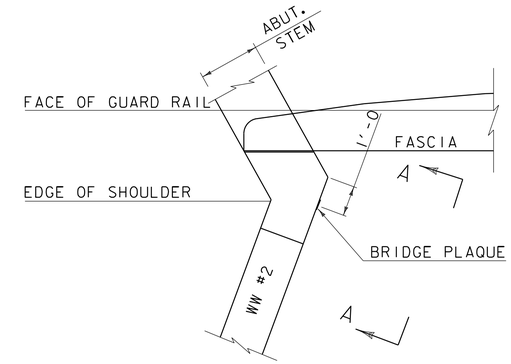

PLAN

CONCRETE CURB JOINT NOTES

1. CONCRETE CURBS MAY BE PLACED IN ONE CONTINUOUS OPERATION IF AN APPROVED SHRINKAGE REDUCING ADMIXTURE LISTED IN THE SPECIAL PROVISIONS IS USED WITH THE CONCRETE MIX DESIGN. PAYMENT FOR THE SHRINKAGE REDUCING ADMIXTURE WILL BE INCIDENTAL TO THE BRIDGE CURB CONCRETE ITEM.

2. IF THE CONTRACTOR CHOOSES NOT TO USE AN APPROVED SHRINKAGE REDUCING ADMIXTURE, THE CURBS SHALL BE CONSTRUCTED WITH CONSTRUCTION JOINTS SPACED AT A MAXIMUM OF 15'-0" CENTER TO CENTER AND 2'-0" MINIMUM FROM THE CENTER OF NEAREST BRIDGE RAILING POST.

3. ON MULTI-SPAN CONTINUOUS SUPERSTRUCTURES, REGARDLESS OF WHETHER APPROVED SHRINKAGE REDUCING ADMIXTURE IS USED, CURB JOINTS SHALL BE LOCATED OVER THE CENTERLINE OF PIERS AND 7'-0" EACH SIDE OF THE CENTERLINE OF EACH PIER.

4. WHEN CURB JOINTS ARE USED THE CURBS SHALL BE PLACED IN ALTERNATE SECTIONS WITH A MINIMUM OF 48 HOUR DELAY BETWEEN ADJACENT PLACEMENTS.

5. LONGITUDINAL REINFORCING SHALL BE CONTINUOUS THROUGH CURB CONSTRUCTION JOINTS. CURB STIRRUP BARS SHALL BE TURNED AS NECESSARY TO MAINTAIN COVER IN THE FLARED CURB ENDS.

6. THE JOINT SPACING AND DETAILS SHOWN SHALL APPLY TO SIDEWALKS WHEN SHOWN IN THE PLANS.

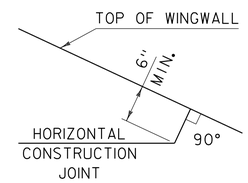

HORIZONTAL WINGWALL CONSTRUCTION JOINT
(NOT TO SCALE)

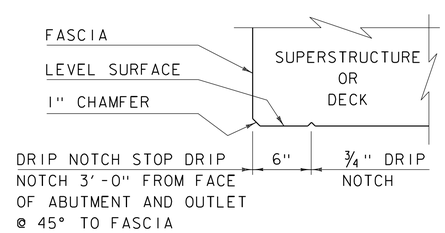

DRIP NOTCH DETAIL
(NOT TO SCALE)

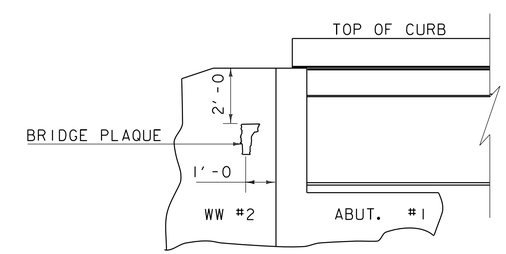

VIEW "A - A"

BRIDGE PLAQUE
(NOT TO SCALE)

THE BRIDGE PLAQUE WILL BE SUPPLIED BY THE AGENCY OF TRANSPORTATION AND SHALL BE INSTALLED BY THE CONTRACTOR AT ABUTMENT #1 ON THE RIGHT SIDE AS SHOWN OR AS DIRECTED BY THE ENGINEER.

PAYMENT FOR INSTALLATION OF THE BRIDGE PLAQUE SHALL BE INCIDENTAL TO THE ADJACENT CONCRETE.

REVISIONS

MAY 7, 2010	APPROVED FOR USE BY VAOT STRUCTURES SECTION
JUNE 4, 2010	MODIFIED AND ADDED TWO DETAILS
OCTOBER 10, 2012	MODIFIED HORZ. JOINT WINGWALL ADD 6" MIN. DIMENSION

CONCRETE DETAILS AND NOTES

VERMONT AGENCY OF TRANSPORTATION
STRUCTURES - SECTION

STRUCTURES DETAIL
SD-502.00

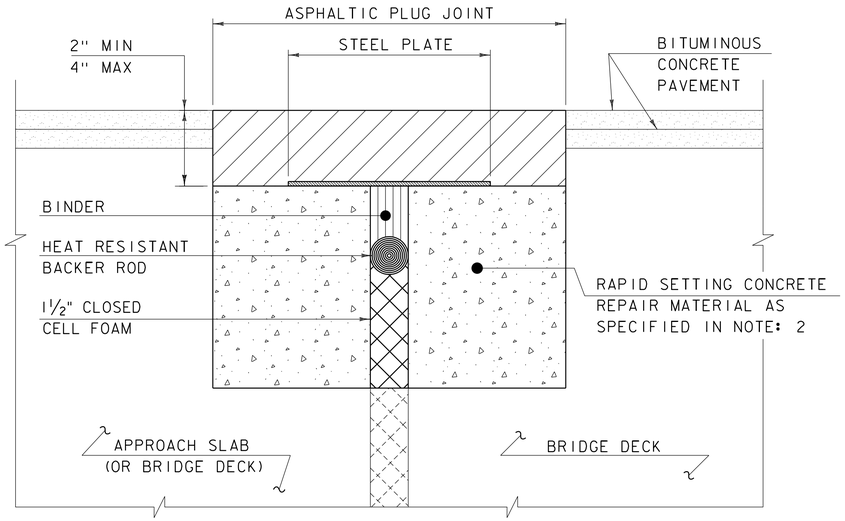

ASPHALTIC PLUG JOINT DETAIL - REHAB

NOTES:

1. THE CONTRACTOR SHALL REMOVE ALL ASPHALTIC PLUG JOINT MATERIAL AND DETERIORATED CONCRETE AS DIRECTED BY THE ENGINEER. REMOVAL OF THE FIRST 4 INCHES OF MATERIAL SHALL BE INCLUDED IN THE BID PRICE FOR ITEM 516.10 BRIDGE EXPANSION JOINT, ASPHALTIC PLUG. ANY REMOVAL OF MATERIAL GREATER THAN 4 INCHES SHALL BE INCLUDED IN THE BID PRICE OF ITEM 580.20 RAPID SETTING CONCRETE REPAIR MATERIAL WITH COARSE AGGREGATE.

2. THE CONTRACTOR SHALL REPLACE REMOVED MATERIAL THAT IS LESS THAN 4" FROM FINISHED GRADE WITH ASPHALTIC PLUG JOINT MATERIAL MEETING THE REQUIREMENTS OF SUBSECTION 707.15. ALL REMOVED MATERIAL THAT IS GREATER THAN 4 INCHES FROM FINISHED GRADE SHALL BE REPLACED WITH RAPID SETTING CONCRETE REPAIR MATERIAL WITH COARSE AGGREGATE MEETING THE REQUIREMENTS OF SUBSECTION 780.04.

3. REINFORCING STEEL NOT SHOWN FOR CLARITY.

4. PLACE 1/4" THICK BY 8" WIDE SECTIONS OF STEEL PLATE OVER THE CENTER OF THE MOVEMENT GAP. SECURE THE PLATES FROM MOVING BY INSERTING LOCATING PINS THROUGH THE PRE-STAMPED HOLES INTO BACKER ROD AND COVER WITH HOT BINDER. THE STEEL PLATES MAY BE OMITTED WHERE THE ENGINEER DETERMINES THAT THE APPROACH SLAB OR BRIDGE DECK WILL PROVIDE INADEQUATE SUPPORT AND WHERE VERTICAL MOVEMENT OF THE PLATES MIGHT OCCUR.

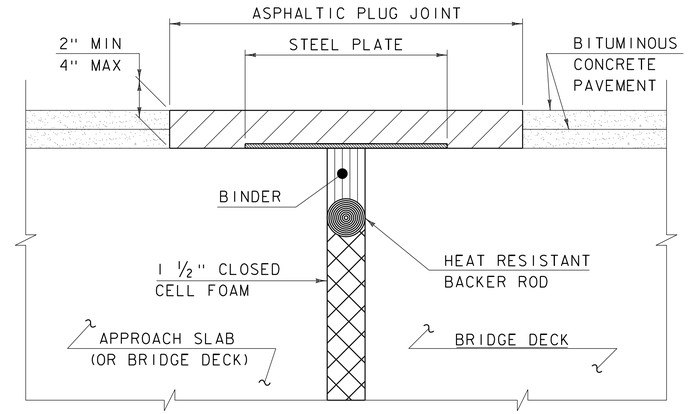

ASPHALTIC PLUG JOINT DETAIL "A" - NEW

NOTE:
PLACE 1/4" THICK BY 8" WIDE SECTIONS OF STEEL PLATE OVER THE CENTER OF THE MOVEMENT GAP. SECURE THE PLATES FROM MOVING BY INSERTING LOCATING PINS THROUGH THE PRE-STAMPED HOLES INTO BACKER ROD AND COVER WITH HOT BINDER.

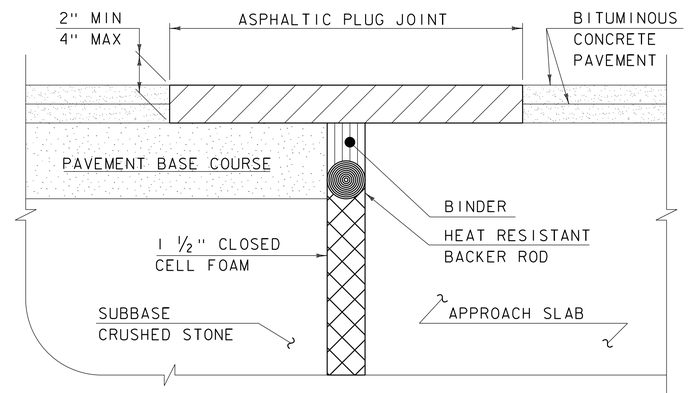

ASPHALTIC PLUG JOINT DETAIL "B" - NEW

ASPHALTIC PLUG JOINT NOTES

INSTALLATION:

1. LOCATE THE JOINT CENTRALLY OVER THE DECK OVERLAY EXPANSION GAP OR FIXED JOINT, MARKED OUT TO THE MANUFACTURER'S RECOMMENDED WIDTH.

2. REMOVE THE BITUMINOUS CONCRETE PAVEMENT FULL DEPTH AS SHOWN ON THE PLANS. THE PAVEMENT SHALL BE DRY AND SAW CUT TO THE LIMITS REQUIRED TO PLACE THE JOINT. A PNEUMATIC HAMMER AND CHISEL MAY BE USED ADJACENT TO THE CURB ONLY WHEN SAW CUTTING IS NOT POSSIBLE.

3. BLAST CLEAN THE JOINT AREA OF DEBRIS, ASPHALT AND SHEET MEMBRANE. THOROUGHLY DRY THE JOINT AREA WITH COMPRESSED AIR PRIOR TO APPLYING BINDER MATERIAL.

4. PLACE PROPERLY SIZED HEAT RESISTANT BACKER ROD IN THE MOVEMENT GAP ALLOWING FOR 1" +/- OF BINDER ABOVE THE ROD.

5. HEAT AND PLACE THE BINDER MATERIAL AS RECOMMENDED BY THE MANUFACTURER.

6. IMMEDIATELY AFTER TOP COATING, CAST AN ANTI-SKID MATERIAL OVER THE JOINT TO REDUCE THE RISK OF TRACKING.

WEATHER LIMITATIONS

APPLY BINDER MATERIAL ONLY WHEN THE FOLLOWING CONDITIONS PREVAIL OR AS RECOMMENDED BY THE MANUFACTURER:

1. THE AMBIENT AIR TEMPERATURE IS AT LEAST 10 DEG C (50 DEG F) AND RISING.

2. THE ROAD SURFACE IS DRY.

3. WEATHER CONDITIONS OR OTHER CONDITIONS ARE FAVORABLE AND ARE EXPECTED TO REMAIN SO FOR THE PERFORMANCE OF SATISFACTORY WORK.

DETAILS ON THIS SHEET ARE NOT TO SCALE.

REVISIONS	
MAY 7, 2010	APPROVED FOR USE BY VAOT STRUCTURES SECTION
AUGUST 29, 2011	ADD DETAIL "B" AND REV. NOTES

BRIDGE JOINT
ASPHALTIC PLUG

VERMONT AGENCY OF TRANSPORTATION
STRUCTURES - DIVISION

STRUCTURES DETAIL

SD-516.10

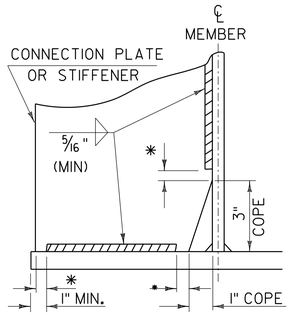

WELD TERMINATION AND COPING DETAILS FOR STEEL MEMBERS

*NO WELD FOR 3/8" MIN. 7/8" MAX. (EXCEPT MUST MAINTAIN 1" MINIMUM FROM EDGE OF FLANGE)

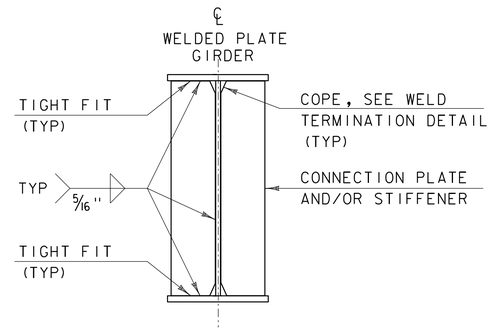

INTERMEDIATE CONNECTION PLATES AND/OR STIFFENERS FOR WELDED PLATE GIRDERS

INTERMEDIATE DETAIL IS ONLY USED WHEN PLATE DOES NOT OCCUR AT AN ABUTMENT OR PIER.

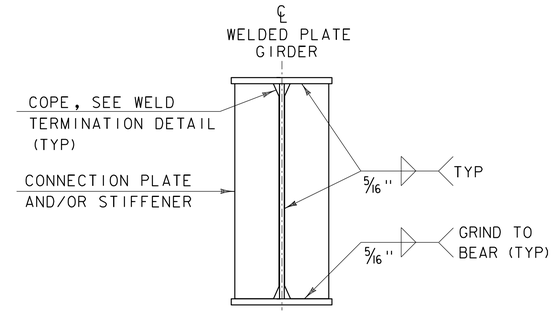

ABUTMENT BEARING STIFFENERS AND/OR CONNECTION PLATES FOR WELDED PLATE GIRDERS

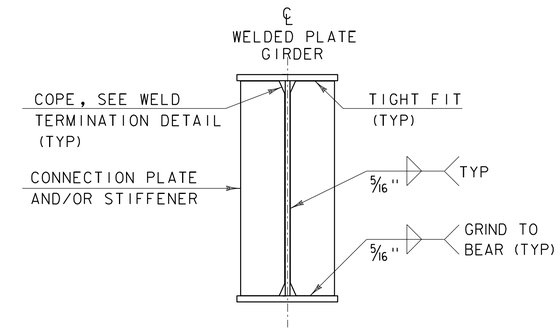

PIER BEARING STIFFENERS AND/OR CONNECTION PLATES FOR WELDED PLATE GIRDERS

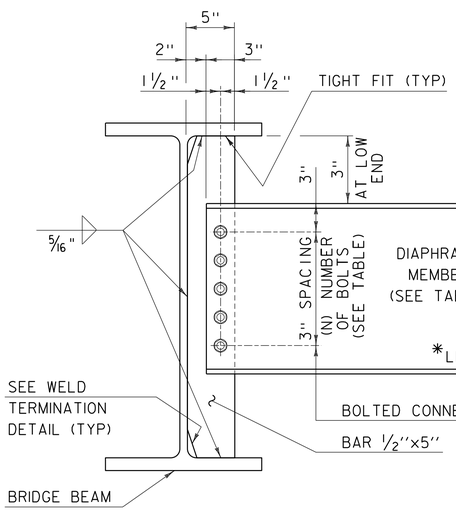

DEPTH		DIAPHRAGM MEMBER	(N) BOLTS
ROLLED BEAM	24" 30"	C15x33.9	4
	31" 36"	MC18x42.7	5
	37" 42"	W21x44	6
PLATE GIRDER WEB	31" 36"	W27x84	7
	37" 42"	W33x118	9
	43" 48"	W36x135	10

INTERMEDIATE DIAPHRAGMS FOR 24" TO 48" BRIDGE BEAMS

* IF CLEARANCE CANNOT BE MET, DIAPHRAGM MAY BE SLOPED.

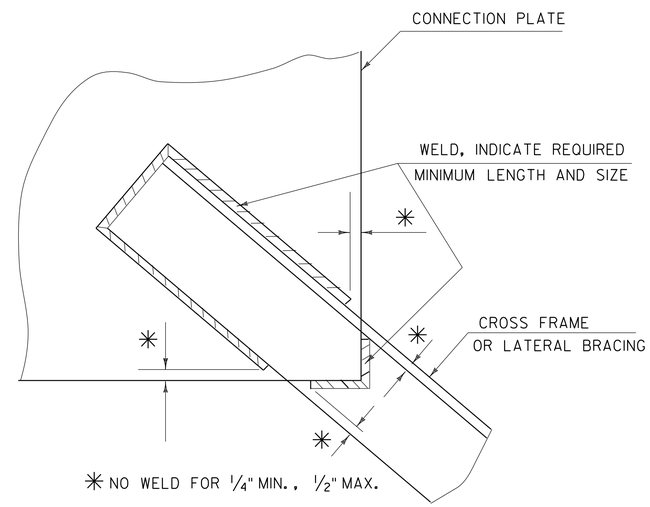

WELD LOCATION DETAIL AT CROSS FRAMES AND LATERAL BRACING

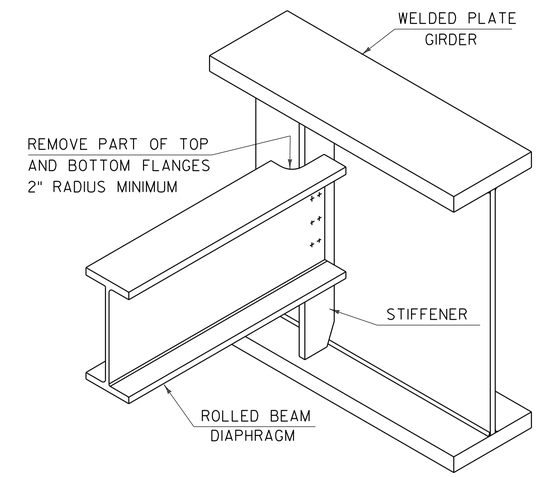

SEE CONTRACT DRAWINGS FOR SIZES OF MEMBERS AND CONNECTION DETAILS

ROLLED BEAM USED AS DIAPHRAGM

DETAILS ON THIS SHEET ARE "NOT TO SCALE" UNLESS NOTED OTHERWISE.

REVISIONS	
MAY 7, 2010	APPROVED FOR USE BY VAOT STRUCTURES SECTION
MAY 2, 2011	ADD INTERMEDIATE DIAPHRAGMS DETAIL & ADD NOT TO SCALE NOTE

STRUCTURAL STEEL PLATE GIRDER DETAILS AND NOTES

VERMONT AGENCY OF TRANSPORTATION
STRUCTURES - SECTION

STRUCTURES DETAIL

SD-602.00