STATE OF VERMONT
AGENCY OF TRANSPORTATION

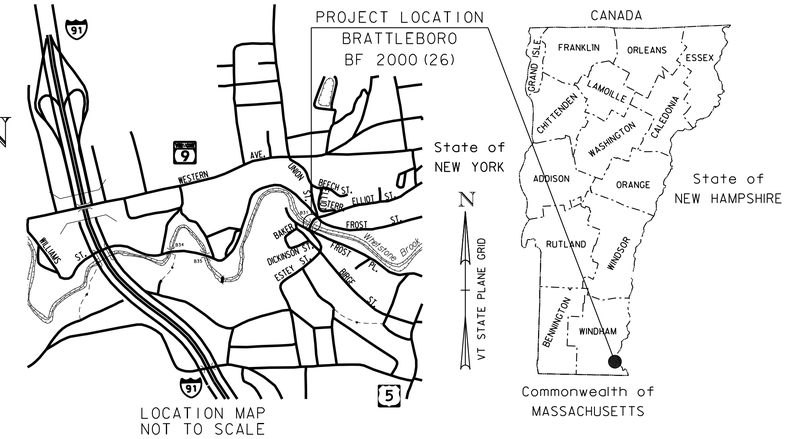

PROPOSED IMPROVEMENT
BRIDGE PROJECT
TOWN OF BRATTLEBORO
COUNTY OF WINDHAM
ELLIOT ST (TH #446) (URBAN COLLECTOR) BRIDGE NO. 31

PROJECT LOCATION: LOCATED IN THE TOWN OF BRATTLEBORO, ON ELLIOT ST (TH #446), APPROXIMATELY 0.010 MILES EASTERLY FROM THE INTERSECTION WITH FROST PL (TH #434).

PROJECT DESCRIPTION: WORK TO BE PERFORMED UNDER THIS PROJECT INCLUDES THE REPLACEMENT OF THE EXISTING BRIDGE DECK INCLUDING RELATED APPROACH WORK.

LENGTH OF STRUCTURE: 90.00 FEET
LENGTH OF ROADWAY: 30.00 FEET
LENGTH OF PROJECT: 120.00 FEET

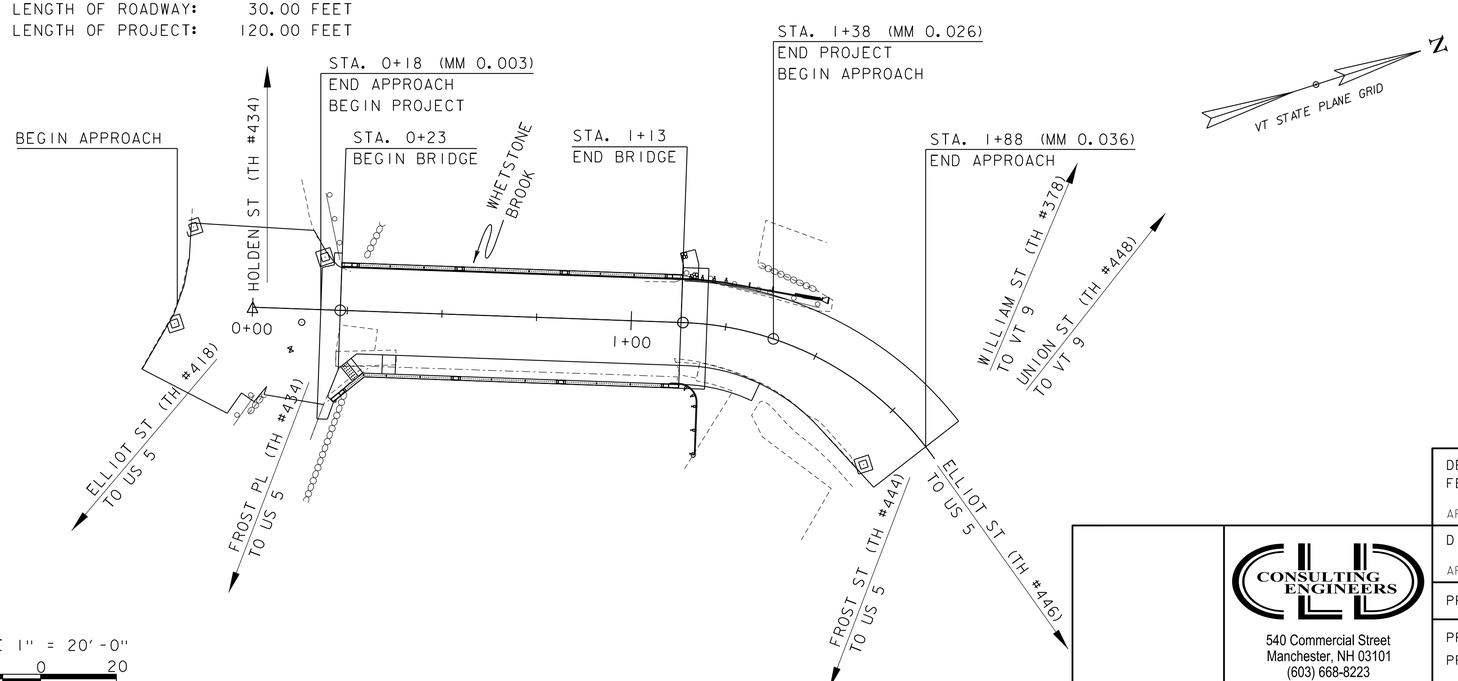

BRATTLEBORO
BF 2000(26)
FINAL PLANS

DECEMBER 4, 2015

CONSTRUCTION IS TO BE CARRIED ON IN ACCORDANCE WITH THESE PLANS AND THE STANDARD SPECIFICATIONS FOR CONSTRUCTION DATED 2011, AS APPROVED BY THE FEDERAL HIGHWAY ADMINISTRATION ON JULY 20, 2011 FOR USE ON THIS PROJECT, INCLUDING ALL SUBSEQUENT REVISIONS AND SUCH REVISED SPECIFICATIONS AND SPECIAL PROVISIONS AS ARE INCORPORATED IN THESE PLANS.

QUALITY ASSURANCE PROGRAM : LEVEL 2

SURVEYED BY : CLD
SURVEYED DATE : 09/21/2015

DATUM
VERTICAL NAVD 88
HORIZONTAL NAD 83

DEPARTMENT OF TRANSPORTATION
FEDERAL HIGHWAY ADMINISTRATOR
APPROVED _____ DATE _____

DIRECTOR OF PROJECT DELIVERY
APPROVED _____ DATE _____

PROJECT MANAGER : JENNIFER FITCH, P.E.

CLD CONSULTING ENGINEERS
540 Commercial Street
Manchester, NH 03101
(603) 668-8223
www.cldengineers.com

PROJECT NAME : BRATTLEBORO
PROJECT NUMBER : BF 2000(26)

SHEET 1 OF 26 SHEETS

INDEX OF SHEETS

1. TITLE SHEET
2.-3. INDEX OF SHEETS AND GENERAL NOTES SHEETS 1-2
4. TYPICALS BRIDGE SECTIONS SHEET
5. TYPICAL ROADWAY SECTIONS SHEET
6.-7. QUANTITY SHEETS 1-2
8. CONVENTIONAL SYMBOLOGY LEGEND SHEET
9. LAYOUT SHEET
10. PROFILE SHEET
11. BRIDGE CLOSURE SIGNAGE SHEET
12. SHEAR CONNECTOR DETAILS SHEET
13.-14. DECK DETAILS SHEETS 1-2
15.-16. REMOVAL AND CURTAIN WALL DETAILS SHEETS 1-2
17. JOINT DETAILS SHEET
18. RAIL LAYOUT SHEET
19.-22. BRIDGE RAIL DETAILS SHEETS 1-4
23. APPROACH RAIL DETAILS SHEET
24.-26. REFERENCE PLAN SHEETS 1-3

STRUCTURE DETAIL SHEETS

SD-501.00	02/09/2012	CONCRETE DETAILS AND NOTES
SD-502.00	10/10/2012	CONCRETE DETAILS AND NOTES
SD-516.10	08/29/2011	BRIDGE JOINT ASPHALTIC PLUG
SD-601.00	06/04/2010	STRUCTURAL STEEL DETAILS & NOTES

VAOT STANDARD SHEETS

B-5	06/1/1994	EMBANKMENT ON EARTH SLOPE, EMBANKMENT ON ROCK SLOPE,MUCK EXCAVATION, TYPICAL SLOPE ROUNDING
B-71	07/08/2005	STANDARDS FOR RESIDENTIAL AND COMMERCIAL DRIVES
C-3A	03/10/2008	SIDEWALK RAMPS
D-3	06/01/1994	TREATED GUTTERS
E-193	08/18/1995	PAVEMENT MARKING DETAILS
G-1	11/10/2015	STEEL BEAM GUARDRAIL WITH STEEL POSTS, STEEL BEAM GUARDRAIL WITH WOOD POSTS
G-1d	02/10/2014	STEEL BEAM GUARDRAIL APPROACH END TERMINAL, STEEL BEAM GUARDRAIL TRAILING END TERMINAL
T-1	08/06/2012	TRAFFIC CONTROL GENERAL NOTES
T-11	08/06/2012	CONSTRUCTION APPROACH SIGNING DIVIDED HIGHWAY ONE LANE CLOSED
T-31	08/06/2012	CONSTRUCTION SIGN DETAILS
T-42	04/09/2014	BRIDGE NUMBER PLAQUE
T-44	04/09/2014	MILEMARKER DETAILS STATE AND TOWN HIGHWAYS

LRFR LOAD RATING FACTORS

LOADING LEVELS	TRUCK						
	H-20	HL-93	3S2	6 AXLE	3A. STR.	4A. STR.	5A. SEMI
TONNAGE	20	36	36	66	30	34.5	38
INVENTORY	1.76	1.21					
POSTING							
OPERATING	2.28	1.57	3.11	2.03	2.88	2.58	2.70
COMMENTS:	H-20 RATING CONTROLLED BY DECK, OTHER TRUCKS BY EXTERIOR BEAMS SERVICE II						

GENERAL

1. ALL MATERIALS AND CONSTRUCTION SHALL CONFORM TO STATE OF VERMONT, AGENCY OF TRANSPORTATION, 2011 STANDARD SPECIFICATIONS FOR CONSTRUCTION, AND ITS LATEST REVISIONS, AND THE AASHTO LRFD BRIDGE DESIGN SPECIFICATIONS, DATED 2014, AND ITS LATEST REVISIONS.

2. ALL WORK AND ANY ASSOCIATED ACTIVITY ON THIS PROJECT SHALL BE PERFORMED WITHIN THE EXISTING RIGHT-OF-WAY LIMITS.

3. THE CONTRACTOR IS MADE AWARE THAT EXISTING UTILITIES ARE WITHIN THE CONSTRUCTION LIMITS OF BRIDGE NO. 31. THE LOCATION OF ANY UTILITY INFORMATION ON THE PLANS IS APPROXIMATE. NO CLAIMS ARE MADE TO THE ACCURACY OR COMPLETENESS OF THE UTILITIES SHOWN. THE CONTRACTOR IS SOLELY RESPONSIBLE FOR LOCATING AND PROTECTING FROM DAMAGE ALL UTILITIES ON SITE DURING ALL STAGES OF CONSTRUCTION. SEE SPECIAL PROVISIONS FOR ADDITIONAL INFORMATION AND REQUIREMENTS.

4. FOLLOWING THE COMPLETION OF ALL OTHER CONSTRUCTION ACTIVITIES, ALL BEAM SEATS SHALL BE CLEANED OFF. THE COST FOR CLEANING BEAM SEATS WILL BE INCIDENTAL TO ALL OTHER ITEMS IN THE CONTRACT.

5. ALL PG BINDER USED IN BITUMINOUS CONCRETE PAVEMENT SHALL BE IN ACCORDANCE WITH SUBSECTION 490.03B.

6. EMULSIFIED ASPHALT SHALL BE APPLIED ON ALL COLD PLANED SURFACES AT THE RATE OF 0.08 GAL/SY AND BETWEEN ALL COURSE OF PAVEMENT AT THE RATE OF 0.040 GAL/SY OR AS DIRECTED BY THE ENGINEER. PAYMENT WILL BE CONSIDERED INCIDENTAL TO ITEM 900.680, "SPECIAL PROVISION (BITUMINOUS CONCRETE PAVEMENT, SMALL QUANTITY)".

7. ANY REQUIRED SAWCUT OF EXISTING PAVEMENT WILL BE CONSIDERED INCIDENTAL TO ITEM 900.680, "SPECIAL PROVISION (BITUMINOUS CONCRETE PAVEMENT, SMALL QUANTITY)".

8. THE CONTRACTOR SHALL BE RESPONSIBLE FOR REPAIRING ANY DAMAGE TO PRIVATE OR PUBLIC PROPERTY CAUSED BY THE CONTRACTOR AT THE CONTRACTOR'S EXPENSE AND TO THE SATISFACTION OF THE ENGINEER.

9. LIMITS OF GROUND SURVEY ARE BETWEEN STA 0+00 AND STA 1+84. OUTSIDE THESE LIMITS ARE APPROXIMATE LOCATION TAKEN FROM AERIAL MAPPING.

ENVIRONMENTAL

10. THE CONTRACTOR SHALL REVIEW AND UNDERSTAND ALL APPLICABLE ENVIRONMENTAL PERMITS AND ENSURE THAT ALL CONSTRUCTION CONDITIONS ARE MET.

11. EROSION CONTROL MEASURES SHALL BE UTILIZED AS REQUIRED AND SHALL BE PER SECTION 105 OF THE STANDARD SPECIFICATIONS AND THE LOW RISK SITE HANDBOOK FOR EROSION PREVENTION AND SEDIMENT CONTROL FROM THE AGENCY OF NATURAL RESOURCES. SEE SUBSECTION 105.23 FOR EROSION CONTROL PLAN REQUIREMENTS.

12. THE CONTRACTOR SHALL PREVENT ANY MATERIAL FROM ENTERING THE WATERWAY DURING EXCAVATION, PARTIAL REMOVAL OF STRUCTURE, OR CONSTRUCTING THE NEW DECK.

13. THE DESIGN INTENT IS TO ALLOW THE CONTRACTOR TO STAGE IN THE TRAVELED ROADWAY OF THE APPROACHES TO THE BRIDGE DURING THE CLOSURE PERIOD. ANY STAGING AREAS OUTSIDE OF THIS SHALL BE CLEARED FOR RESOURCES THROUGH THE VTRANS ENVIRONMENTAL UNIT.

TRAFFIC CONTROL

14. AS PART OF ITEM 900.645, "SPECIAL PROVISION (TRAFFIC CONTROL, ALL INCLUSIVE)", THE CONTRACTOR SHALL SUBMIT A SITE SPECIFIC TRAFFIC CONTROL PLAN FOR APPROVAL IN ACCORDANCE WITH SUBSECTION 105.03 AND SHALL BE STAMPED BY A PROFESSIONAL ENGINEER LICENSED IN AN APPROPRIATE DISCIPLINE IN THE STATE OF VERMONT. THE PLAN SHALL INCLUDE A LAYOUT SHOWING ALL ON- AND OFF-PROJECT SIGNS AND BARRICADES AND ANY OTHER DETAILS ASSOCIATED WITH THE TRAFFIC CONTROL.

15. ALL ITEMS REQUIRED TO PREPARE, SUBMIT, AND IMPLEMENT THE CONTRACTOR'S PLAN, INCLUDING ANY NECESSARY REVISIONS TO THE PLAN, WILL BE INCLUDED IN THE UNIT BID PRICE FOR ITEM 900.645, "SPECIAL PROVISION (TRAFFIC CONTROL, ALL-INCLUSIVE)". THIS INCLUDES, BUT IS NOT LIMITED TO, THE FOLLOWING:

    TRAFFIC CONTROL PLAN
    TEMPORARY TRAFFIC BARRIER
    UNIFORMED TRAFFIC OFFICERS/FLAGGERS
    BARRICADES
    DRUMS/CONES
    ON PROJECT CONSTRUCTION SIGNING
    TEMPORARY PAVEMENT MARKINGS (IF REQUIRED)
    PORTABLE CHANGEABLE MESSAGE BOARDS

    THE CONTRACTOR SHALL ALLOW TWO WEEKS FOR APPROVAL OF THE TRAFFIC CONTROL PLAN. NO WORK SHALL COMMENCE UNTIL THE CONTRACTOR HAS AN APPROVED TRAFFIC CONTROL PLAN.

16. DURING CONSTRUCTION OF THE BRIDGE, TRAFFIC SHALL BE MAINTAINED BY AN OFF-SITE DETOUR. SEE THE SPECIAL PROVISIONS FOR ADDITIONAL INFORMATION AND REQUIREMENTS REGARDING THE CLOSURE PERIOD. DETOUR ROUTES WILL BE DETERMINED, SIGNED, AND PAID FOR BY THE TOWN. THE CONTRACTOR SHALL COORDINATE WITH THE TOWN AND THE ENGINEER. THE CONTRACTOR SHALL BE RESPONSIBLE FOR PROVIDING CLOSURE SIGNAGE AS SHOWN ON SHEET 11 IN ACCORDANCE WITH THE LATEST EDITION OF THE MUTCD AND VTRANS STANDARDS. PAYMENT FOR BRIDGE CLOSURE SIGNAGE WILL BE MADE UNDER ITEM 900.645, "SPECIAL PROVISION (TRAFFIC CONTROL, ALL-INCLUSIVE)".

DECK REMOVAL AND RELATED ITEMS

17. PAVEMENT REMOVAL SHOULD BE LIMITED AS SHOWN ON THE PLANS. THIS WORK SHALL BE IN ACCORDANCE WITH SECTION 529 OF THE STANDARD SPECIFICATIONS.

18. ITEM 529.20, "PARTIAL REMOVAL OF STRUCTURE" SHALL INCLUDE REMOVAL OF ANY PORTIONS OF THE EXISTING STRUCTURE AS SHOWN ON THE PLANS, INCLUDING THE EXISTING BRIDGE DECK, CURTAIN WALLS, WINGWALLS, AND BRIDGE RAILING. THE EXISTING CONCRETE CURTAIN WALLS AND WINGWALLS SHALL BE REMOVED BY MECHANICAL MEANS AND THE REMAINING CONCRETE SHALL HAVE NEAT LINES AND BE SMOOTH. PROTECT ALL ELEMENTS INTENDED TO REMAIN.

19. DURING EXCAVATION OF BRIDGE CURTAIN WALL, ALL DRAINAGE STRUCTURES AND PIPES SHALL BE SUPPORTED AND SHALL REMAIN IN-PLACE. PAYMENT FOR SUPPORTING DRAINAGE STRUCTURES WILL BE CONSIDERED INCIDENTAL TO 203.15, "COMMON EXCAVATION".

20. AFTER REMOVAL OF THE EXISTING BRIDGE DECK AND CURTAIN WALL, ANY AREAS ON THE CONCRETE BEAM SEAT THAT ARE FOUND TO BE UNSOUND SHALL BE BROUGHT TO THE ATTENTION OF THE ENGINEER. THE METHOD FOR DETERMINING AREAS OF UNSOUND CONCRETE SHALL BE APPROVED BY THE ENGINEER. THE ENGINEER SHALL MAKE A DETERMINATION AS TO HOW TO REPAIR THE DETERIORATED PORTION OF THE CONCRETE BEAM SEAT AND THE LIMITS OF THE REPAIR. THE REPAIRS SHALL BE PAID FOR UNDER ITEM 580.13, "REPAIR OF CONCRETE SUBSTRUCTURE SURFACE, CLASS I" OR ITEM 580.14, "REPAIR OF CONCRETE SUBSTRUCTRE SURFACE, CLASS II. QUANTITIES FOR ITEMS 580.13 AND 580.14 AS SHOWN ON THE QUANTITY SUMMARY SHEETS ARE ESTIMATED.

STEEL

21. AFTER ALL PAVEMENT AND MEMBRANE ARE REMOVED BUT PRIOR TO THE REMOVAL OF THE EXISTING CONCRETE DECK, THE CONTRACTOR SHALL TAKE TOP OF DECK ELEVATIONS ALONG THE CENTERLINE OF EACH BEAM AT TENTH POINTS FROM CENTERLINE TO CENTERLINE OF BEARING. AFTER THE EXISTING CONCRETE DECK HAS BEEN REMOVED, THE CONTRACTOR SHALL TAKE ELEVATIONS ALONG THE TOP OF EACH BEAM AT TENTH POINTS FROM CENTERLINE TO CENTERLINE OF BEARING. THE TOP OF DECK AND TOP OF BEAM ELEVATIONS SHALL THEN BE SENT TO THE ENGINEER FOR USE IN DETERMINING THE FINAL PROFILE AND HAUNCH DEPTHS. THE CONTRACTOR SHOULD EXPECT 3 WORKING DAYS FOR VTRANS TO PREPARE THE REVISED PROFILE AND HAUNCH DEPTH CALCULATIONS.

22. THE EXISTING STRUCTURAL STEEL IS PAINTED WITH A MATERIAL THAT MAY CONTAIN LEAD. THE CONTRACTOR SHALL FOLLOW ALL APPLICABLE REGULATIONS WHEN HANDLING AND WORKING WITH THIS STEEL. ANY REMOVED STRUCTURAL STEEL IS THE PROPERTY OF THE CONTRACTOR. THE CONTRACTOR SHALL INDEMNIFY AND HOLD THE STATE AND ITS OFFICERS AND EMPLOYEES HARMLESS CONCERNING THE CONTRACTOR'S USE OR DISPOSITION OF THE REMOVED EXISTING STRUCTURAL STEEL.

23. UPON REMOVING THE DECK, THE TOPS OF THE BEAMS IN THE AREA OF THE SHEAR STUDS SHALL BE CLEANED IN ACCORDANCE WITH SECTION 105 AND ALL APPLICABLE PROVISIONS PRIOR TO THE WELDING OF THE SHEAR STUDS. THE CONTRACTOR SHALL OBTAIN AND COMPLY WITH ALL NECESSARY LEAD ABATEMENT PERMITS.

24. THE SHEAR STUDS SHALL BE SPACED AS SHOWN ON THE PLANS.

25. SUPPORT BRACKETS FOR DECK OVERHANG FORMS SHALL BE SPACED AS REQUIRED BY DESIGN WITH A MAXIMUM SPACING OF 4 FEET AND SHALL EXTEND TO THE BOTTOM QUARTER OF THE WEB. THE DESIGN OF THE BRACKETS SHALL BE THE RESPONSIBILITY OF THE CONTRACTOR. DESIGN DRAWINGS AND WORKING DRAWINGS CONFORMING THE SECTION 105 OF THE STANDARD SPECIFICATIONS FOR CONSTRUCTION SHALL BE SUBMITTED. PAYMENT FOR THIS WORK WILL BE CONSIDERED INCIDENTAL TO ITEM 501.33, "CONCRETE, HIGH PERFORMANCE CLASS A".

REINFORCED CONCRETE

26. ALL CONCRETE SHALL CONFORM TO THE SPECIFICATIONS FOR CONCRETE, HIGH PERFORMANCE CLASS A. THE CONTRACTOR SHALL PROVIDE TESTING EQUIPMENT FOR CONCRETE IN ACCORDANCE WITH 631.05 OF THE STANDARD SPECIFICATIONS FOR CONSTRUCTION.

27. ALL REINFORCING STEEL SHALL BE LEVEL I - EPOXY COATED AND MEET THE REQUIREMENTS OF SECTION 507 OF THE STANDARD SPECIFICATIONS FOR CONSTRUCTION. A REINFORCING STEEL SCHEDULE AND SHOP DRAWINGS MEETING THE REQUIREMENTS OF SECTION 105.03 OF THE SPECIFICATIONS FOR CONSTRUCTION FOR WORKING DRAWINGS SHALL BE SUBMITTED. PAYMENT FOR THIS WORK WILL BE CONSIDERED INCIDENTAL TO ITEM 507.11, "REINFORCING STEEL, LEVEL I".

28. WATER REPELLENT, SILANE SHALL BE APPLIED TO ALL EXPOSED CONCRETE BRIDGE RAIL AND BRIDGE DECK SURFACES EXCEPT THE UNDERSIDE OF THE DECK BETWEEN THE DRIP NOTCHES. THIS WORK WILL BE PAID FOR UNDER ITEM 514.10, "WATER REPELLENT, SILANE".

29. THE CORK JOINT BETWEEN THE EXISTING CHEEKWALLS AND CAST-IN-PLACE CONCRETE CURTAIN WALL SHALL BE INCIDENTAL TO ITEM 501.33, "CONCRETE, HIGH PERFORMANCE CLASS A".

30. THE PREFORMED JOINT SEALER, CLOSED CELL FOAM BETWEEN THE CAST-IN-PLACE CONCRETE CURTAIN WALL AND THE EXISTING BRIDGE SEAT SHALL MEET THE REQUIREMENTS OF SECTION 707.09 OF THE STANDARD SPECIFICATIONS FOR CONSTRUCTION AND SHALL BE INCIDENTAL TO ITEM 501.33, "CONCRETE, HIGH PERFORMANCE CLASS A".

31. ALL REINFORCING SHALL BE DETAILED AND FABRICATED USING PROCEDURES AND TOLERANCES IN ACCORDANCE WITH APPLICABLE PUBLICATIONS OF THE "CONCRETE REINFORCING INSTITUTE".

32. MINIMUM CLEAR COVER FOR REINFORCING STEEL SHALL BE AS FOLLOWS:

ALONG BACKFACES OF WALL AGAINST EARTH:	2.0 INCH
ALONG TOP SURFACE OF DECK SLAB:	3.0 INCH
ALONG BOTTOM SURFACE OF DECK SLAB:	1.5 INCH
ELSEWHERE UNLESS OTHERWISE INDICATED:	3.0 INCH

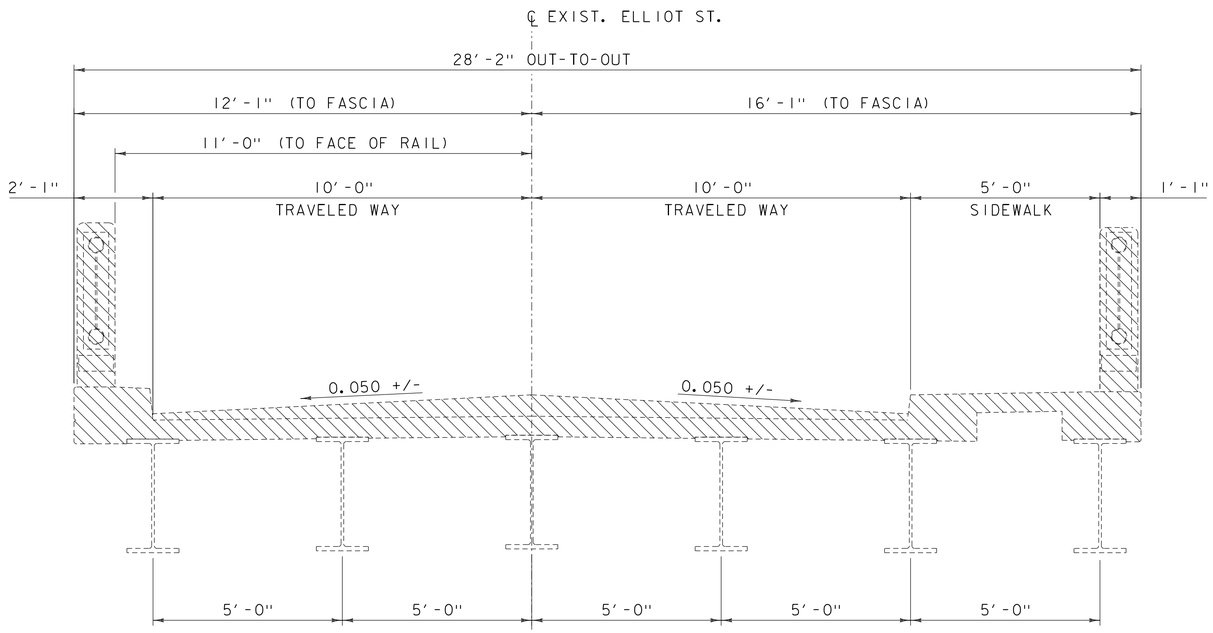

EXISTING TYPICAL BRIDGE SECTION

SCALE: ½" = 1'-0"

PARTIAL REMOVAL OF STRUCTURE

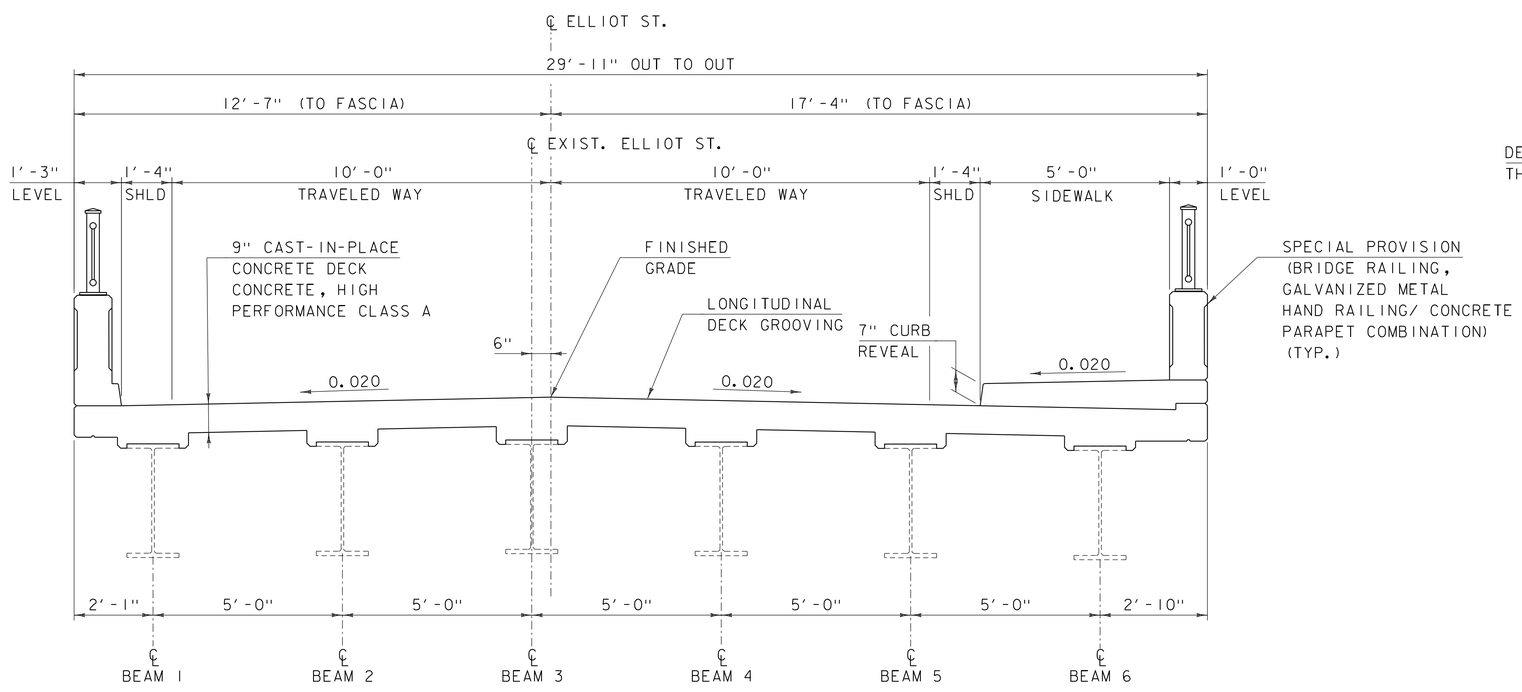

TYPICAL BRIDGE SECTION

SCALE: ½" = 1'-0"

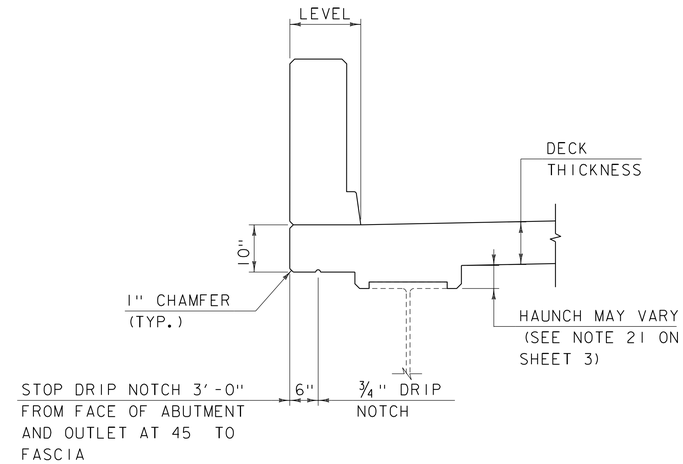

CURB FASCIA AND DRIP NOTCH DETAIL

SCALE: ¾" = 1'-0"

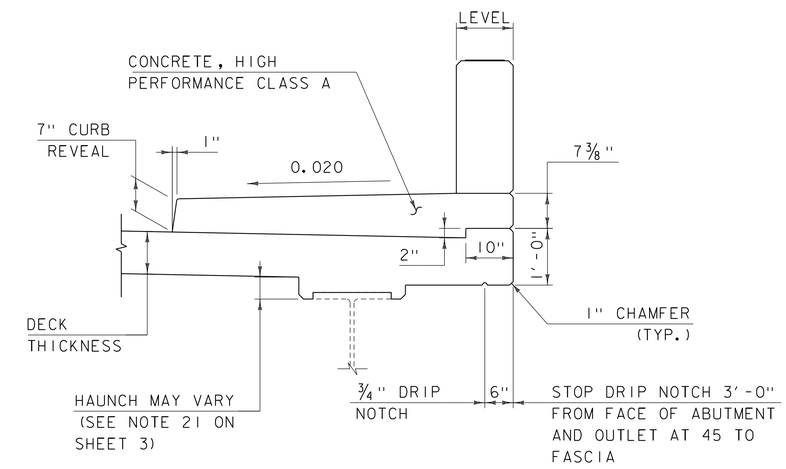

SIDEWALK FASCIA AND DRIP NOTCH DETAIL

SCALE: ¾" = 1'-0"

PROJECT NAME: BRATTLEBORO	
PROJECT NUMBER: BF 2000(26)	
FILE NAME: z15j091typ-31.dgn	PLOT DATE: 12/4/2015
PROJECT LEADER: J. BYATT	DRAWN BY: M. SMITH
DESIGNED BY: N. CARON	CHECKED BY: S. BEAUMONT
TYPICALS BRIDGE SECTIONS SHEET	SHEET 4 OF 26

CONSULTING ENGINEERS

CLD 15-0223 MODEL: TYP01

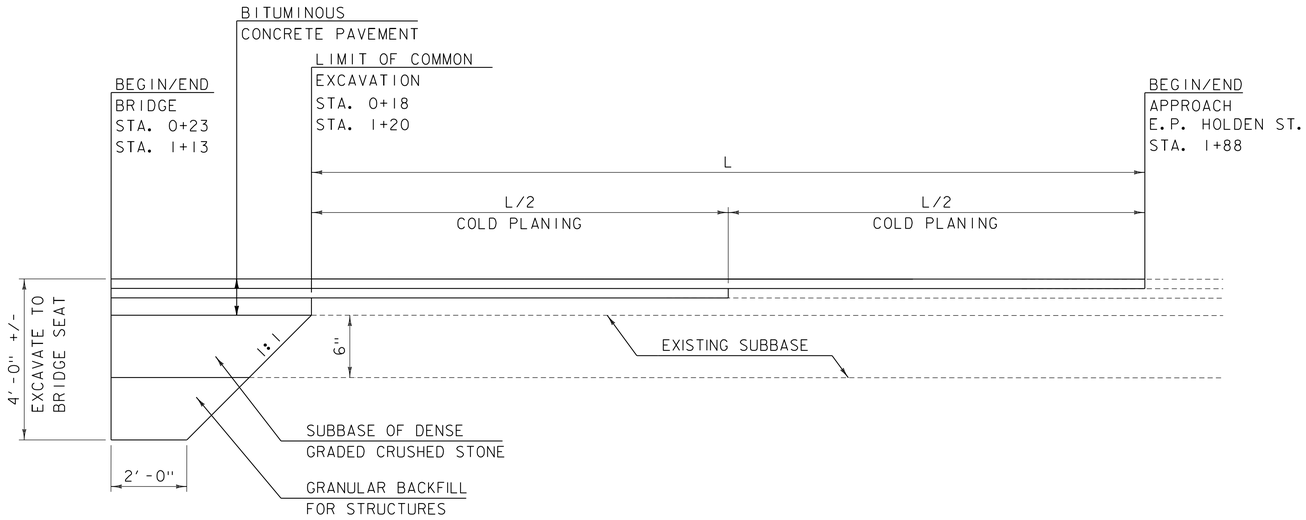

MATERIAL TRANSITION DIAGRAM

NOT TO SCALE

MATERIAL TOLERANCES	
SURFACE	
- PAVEMENT (TOTAL THICKNESS)	+/- 1/4"
- AGGREGATE SURFACE COURSE	+/- 1/2"
SUBBASE	+/- 1"

NOTE

1. EMULSIFIED ASPHALT SHALL BE APPLIED TO ALL COLD PLANED SURFACES AT A RATE OF 0.080 GAL/SY AND BETWEEN EACH LIFT OF PAVEMENT AT A RATE OF 0.040 GAL/SY OR AS DIRECTED BY THE ENGINEER.

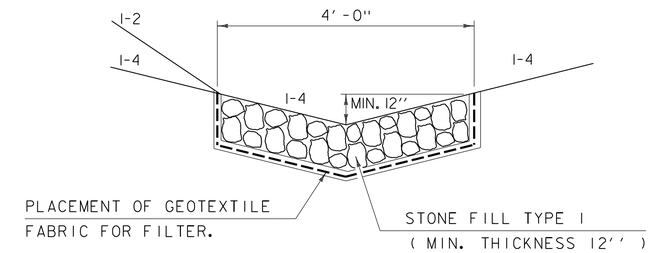

TYPICAL STONE FILL DITCH

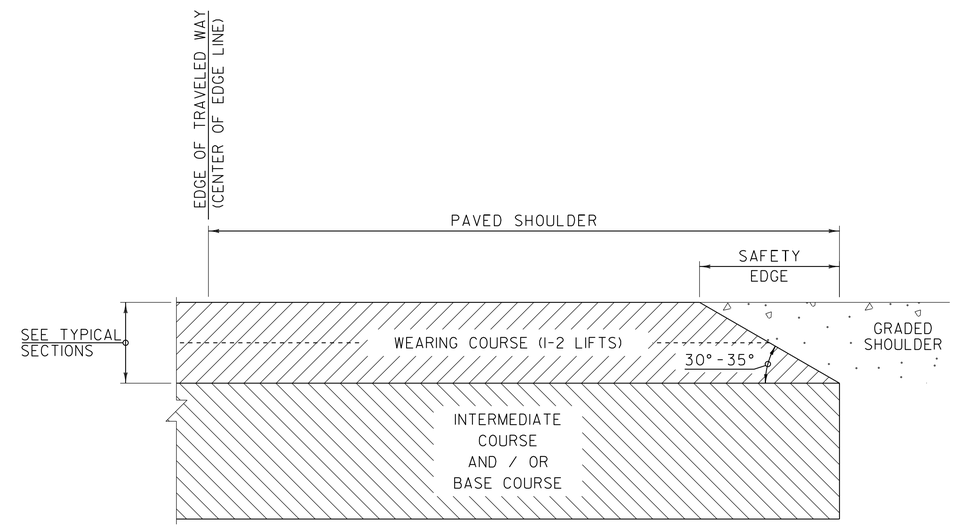

SAFETY EDGE DETAIL

3" SPECIAL PROVISION (BITUMINOUS CONCRETE PAVEMENT, SMALL QUANTITY) (2-1 1/2" LIFTS) (TYPE IV)
3" SPECIAL PROVISION (BITUMINOUS CONCRETE PAVEMENT, SMALL QUANTITY) (2-1 1/2" LIFTS) (TYPE II)

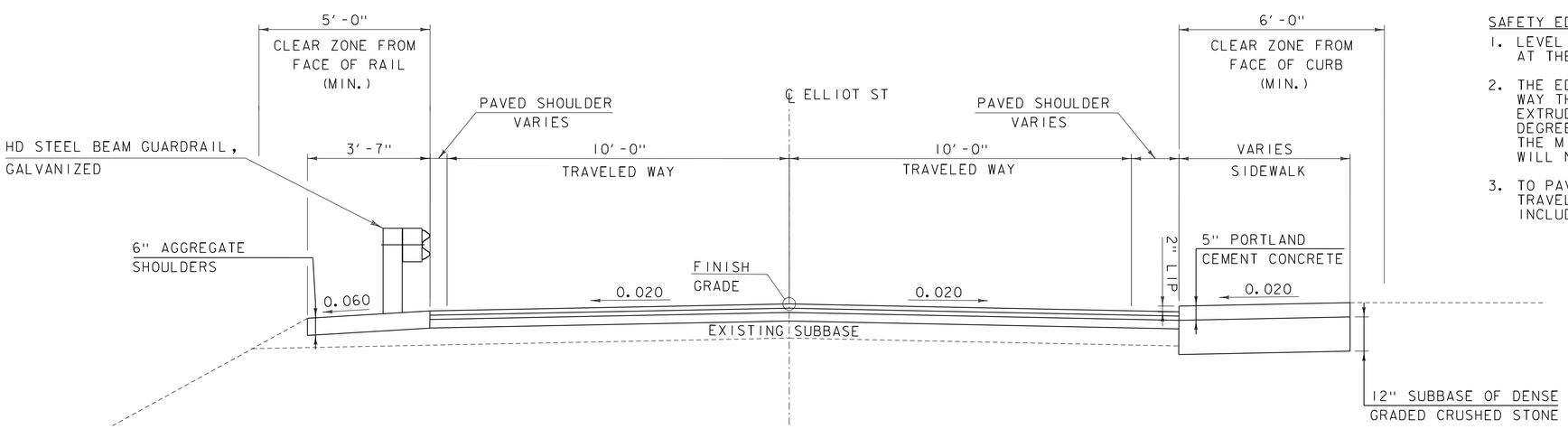

ELLIOT ST (TH #446)
TYPICAL SECTION

SCALE: 1/2" = 1'-0"

SAFETY EDGE NOTES

1. LEVELING COURSE MAY INCLUDE THE "SAFETY EDGE" AT THE CONTRACTOR'S CHOICE.
2. THE EDGE OF PAVEMENT SHALL BE FORMED IN SUCH A WAY THAT THE BITUMINOUS CONCRETE PAVEMENT IS EXTRUDED OR COMPRESSED TO FORM THE 30 TO 35 DEGREE ANGLE. DEVICES THAT SIMPLY STRIKE-OFF THE MIX WITHOUT PROVIDING ANY COMPACTIVE EFFORT WILL NOT BE ALLOWED.
3. TO PAVED SHOULDER EXTENDS FROM THE EDGE OF TRAVELED WAY TO THE EDGE OF THE WEARING COURSE, INCLUDED THE "SAFETY EDGE".

NOT TO SCALE

CONSULTING ENGINEERS

PROJECT NAME: BRATTLEBORO	
PROJECT NUMBER: BF 2000(26)	
FILE NAME: z15j091typ-31.dgn	PLOT DATE: 12/4/2015
PROJECT LEADER: J. BYATT	DRAWN BY: P. McKECHNIE
DESIGNED BY: L. GREER	CHECKED BY: S. FORTIER
TYPICAL ROADWAY SECTIONS SHEET	SHEET 5 OF 26

CLD 15-0223 MODEL: TYP02

STATE OF VERMONT
AGENCY OF TRANSPORTATION

QUANTITY SHEET 1

SUMMARY OF ESTIMATED QUANTITIES				TOTALS		DESCRIPTIONS			
ROADWAY	EROSION CONTROL	BRIDGE NO. 31	FULL C.E. ITEMS	GRAND TOTAL	FINAL	UNIT	ITEMS	ITEM NUMBER	ROUND
1				1		LS	CLEARING AND GRUBBING, INCLUDING INDIVIDUAL TREES AND STUMPS	201.10	-
50				50		CY	COMMON EXCAVATION	203.15	3
35				35		CY	GRANULAR BACKFILL FOR STRUCTURES	204.30	5
425				425		SY	COLD PLANING, BITUMINOUS PAVEMENT	210.10	8
15				15		CY	SUBBASE OF DENSE GRADED CRUSHED STONE	301.35	1.9
10				10		TON	AGGREGATE SHOULDERS	402.12	1
		113		113		CY	CONCRETE, HIGH PERFORMANCE CLASS A	501.33	0.28
		20973		20973		LB	REINFORCING STEEL, LEVEL I	507.11	0.56
		1		1		LS	SHEAR CONNECTORS (1266 - 8" X 7/8")	508.15	
		228		228		SY	LONGITUDINAL DECK GROOVING	509.10	0.26
		34		34		GAL	WATER REPELLENT, SILANE	514.10	0.86
		35		35		LF	BRIDGE EXPANSION JOINT, ASPHALTIC PLUG	516.10	0.42
		23		23		LF	JOINT SEALER, HOT POURED	524.11	0.33
		1		1		EACH	PARTIAL REMOVAL OF STRUCTURE	529.20	-
		10		10		SY	REPAIR OF CONCRETE SUBSTRUCTURE SURFACE, CLASS I	580.13	EST.
		10		10		SY	REPAIR OF CONCRETE SUBSTRUCTURE SURFACE, CLASS II	580.14	EST.
4				4		EACH	REHAB. DROP INLETS, CATCH BASINS, OR MANHOLES, CLASS I	604.412	-
1				1		EACH	CHANGING ELEVATION OF SEWER MANHOLES	604.42	-
1				1		CY	STONE FILL, TYPE I	613.10	-
8				8		LF	CAST-IN-PLACE CONCRETE CURB, TYPE B	616.28	-
15				15		SY	PORTLAND CEMENT CONCRETE SIDEWALK, 5 INCH	618.10	1
		10		10		SF	DETECTABLE WARNING SURFACE	618.30	-
37.5				37.5		LF	HD STEEL BEAM GUARDRAIL, GALVANIZED	621.21	-
3				3		EACH	STEEL BEAM GUARDRAIL OFFSET BLOCK	621.219	-
1				1		EACH	MANUFACTURED TERMINAL SECTION, FLARED	621.50	-
2				2		EACH	ANCHOR FOR STEEL BEAM RAIL	621.60	-
40				40		LF	REMOVAL AND DISPOSAL OF GUARDRAIL	621.80	3
3				3		EACH	GUIDE POSTS	621.85	-
1				1		EACH	ADJUST ELEVATION OF VALVE BOX	629.20	-
			1	1		LS	FIELD OFFICE, ENGINEERS	631.10	-
			1	1		LS	TESTING EQUIPMENT, CONCRETE	631.16	-
			3000	3000		DL	FIELD OFFICE TELEPHONE (N.A.B.I.)	631.26	-
1				1		LS	MOBILIZATION/DEMOBILIZATION	635.11	-
200				200		LF	DURABLE 4 INCH WHITE LINE, THERMOPLASTIC	646.402	20
350				350		LF	DURABLE 4 INCH YELLOW LINE, THERMOPLASTIC	646.412	20
10				10		EACH	LINE STRIPING TARGETS	646.76	1
5				5		SY	GEOTEXTILE UNDER STONE FILL	649.31	-
1				1		EACH	REMOVING SIGNS	675.50	-
2				2		EACH	DELINEATOR WITH STEEL POST	676.10	-
1				1		LU	PRICE ADJUSTMENT, FUEL (N.A.B.I.)	690.50	-

DETAILED SUMMARY OF QUANTITIES		
QUANTITIES	UNIT	ITEMS

PROJECT NAME: BRATTLEBORO
PROJECT NUMBER: BF 2000(26)

FILE NAME: z15j091qss-31.dgn
PROJECT LEADER: J. BYATT
DESIGNED BY: J. FRENCH
QUANTITY SHEET 1

PLOT DATE: 12/4/2015
DRAWN BY: M. SMITH
CHECKED BY: A. GIRALDI
SHEET 6 OF 26

STATE OF VERMONT
AGENCY OF TRANSPORTATION

QUANTITY SHEET 2

SUMMARY OF ESTIMATED QUANTITIES

ROADWAY	EROSION CONTROL	BRIDGE NO. 31	FULL C.E. ITEMS
6			
		184.33	
1			
1			
1			
1			
15			
65			

TOTALS

GRAND TOTAL	FINAL
6	
184.33	
1	
1	
1	
1	
15	
65	

DESCRIPTIONS

UNIT	ITEMS	ITEM NUMBER	ROUND
EACH	SPECIAL PROVISION (CPM SCHEDULE)	900.620	-
LF	SPECIAL PROVISION (BRIDGE RAILING, GALVANIZED METAL HAND RAILING/CONCRETE PARAPET COMBINATION)	900.640	
LS	SPECIAL PROVISION (TRAFFIC CONTROL, ALL INCLUSIVE)	900.645	-
LU	SPECIAL PROVISION (INCENTIVE/DISINCENTIVE) (N.A.B.I.)	900.650	
LU	SPECIAL PROVISION (MAT DENSITY PAY ADJUSTMENT, SMALL QUANTITY) (N.A.B.I.)	900.650	-
LU	SPECIAL PROVISION (MIXTURE PAY ADJUSTMENT) (N.A.B.I.)	900.650	
SY	SPECIAL PROVISION (HAND-PLACED BITUMINOUS CONCRETE MATERIAL, DRIVES)	900.675	4
TON	SPECIAL PROVISION (BITUMINOUS CONCRETE PAVEMENT, SMALL QUANTITY)	900.680	4

DETAILED SUMMARY OF QUANTITIES

QUANTITIES	UNIT	ITEMS
		SPECIAL PROVISION (BITUMINOUS CONCRETE PAVEMENT, SMALL QUANTITY)
4	TON	TYPE II
57	TON	TYPE IV
61	TON	SUBTOTAL
4	TON	ROUNDING
65	TON	TOTAL

PROJECT NAME: BRATTLEBORO
PROJECT NUMBER: BF 2000(26)

FILE NAME: z15j091qss-31.dgn
PROJECT LEADER: J. BYATT
DESIGNED BY: S. BEAUMONT
QUANTITY SHEET 2

PLOT DATE: 12/4/2015
DRAWN BY: M. SMITH
CHECKED BY: A. GIRALDI
SHEET 7 OF 26

GENERAL INFORMATION

SYMBOLOGY LEGEND NOTE

THE SYMBOLOGY ON THIS SHEET IS INTENDED TO COVER STANDARD CONVENTIONAL SYMBOLOGY. THE SYMBOLOGY IS USED FOR EXISTING & PROPOSED FEATURES WITH HEAVIER LINEWEIGHT, IN COMBINATION WITH PROJECT ANNOTATION, AS NOTED ON PROJECT PLAN SHEETS. THIS LEGEND SHEET COVERS THE BASICS. SYMBOLOGY ON PLANS MAY VARY, PLAN ANNOTATIONS AND NOTES SHOULD BE USED TO CLARIFY AS NEEDED.

R.O.W. ABBREVIATIONS (CODES) & SYMBOLS

POINT	CODE	DESCRIPTION
	CH	CHANNEL EASEMENT
	CONST	CONSTRUCTION EASEMENT
	CUL	CULVERT EASEMENT
	D&C	DISCONNECT & CONNECT
	DIT	DITCH EASEMENT
	DR	DRAINAGE EASEMENT
	DRIVE	DRIVEWAY EASEMENT
	EC	EROSION CONTROL
	HWY	HIGHWAY EASEMENT
	I&M	INSTALL & MAINTAIN EASEMENT
	LAND	LANDSCAPE EASEMENT
	R&RES	REMOVE & RESET
	R&REP	REMOVE & REPLACE
	SR	SLOPE RIGHT
	UE	UTILITY EASEMENT
	(P)	PERMANENT EASEMENT
	(T)	TEMPORARY EASEMENT
■	BNDNS	BOUND SET
⊡	BNDNS	BOUND TO BE SET
●	IPNS	IRON PIN SET
◎	IPNS	IRON PIN TO BE SET
⊠	CALC	EXISTING ROW POINT
○	PROW	PROPOSED ROW POINT
[LENGTH]		LENGTH CARRIED ON NEXT SHEET

COMMON TOPOGRAPHIC POINT SYMBOLS

POINT	CODE	DESCRIPTION
	APL	BOUND APPARENT LOCATION
	BM	BENCHMARK
	BND	BOUND
	CB	CATCH BASIN
	COMB	COMBINATION POLE
	DITHR	DROP INLET THROATED DNC
	EL	ELECTRIC POWER POLE
	FPOLE	FLAGPOLE
	GASFIL	GAS FILLER
	GP	GUIDE POST
	GSO	GAS SHUT OFF
	GUY	GUY POLE
	GUYW	GUY WIRE
	GV	GATE VALUE
	H	TREE HARDWOOD
	HCTRL	CONTROL HORIZONTAL
	HVCTRL	CONTROL HORIZ. & VERTICAL
	HYD	HYDRANT
	IP	IRON PIN
	IPIPE	IRON PIPE
	LI	LIGHT - STREET OR YARD
	MB	MAILBOX
	MH	MANHOLE (MH)
	MM	MILE MARKER
	PM	PARKING METER
	PMK	PROJECT MARKER
	POST	POST STONE/WOOD
	RRSIG	RAILROAD SIGNAL
	RRSL	RAILROAD SWITCH LEVER
	S	TREE SOFTWOOD
	SAT	SATELLITE DISH
	SHRUB	SHRUB
	SIGN	SIGN
	STUMP	STUMP
	TEL	TELEPHONE POLE
	TIE	TIE
	TSIGN	SIGN W/DOUBLE POST
	VCTRL	CONTROL VERTICAL
	WELL	WELL
	WSO	WATER SHUT OFF

THESE ARE COMMON VAOT SURVEY POINT SYMBOLS FOR EXISTING FEATURES, ALSO USED FOR PROPOSED FEATURES WITH HEAVIER LINEWEIGHT, IN COMBINATION WITH PROPOSED ANNOTATION.

PROPOSED GEOMETRY CODES

CODE	DESCRIPTION
PC	POINT OF CURVATURE
PI	POINT OF INTERSECTION
CC	CENTER OF CURVE
PT	POINT OF TANGENCY
PCC	POINT OF COMPOUND CURVE
PRC	POINT OF REVERSE CURVE
POB	POINT OF BEGINNING
POE	POINT OF ENDING
STA	STATION PREFIX
AH	AHEAD STATION SUFFIX
BK	BACK STATION SUFFIX
D	CURVE DEGREE OF (100FT)
R	CURVE RADIUS OF
T	CURVE TANGENT LENGTH
L	CURVE LENGTH OF
E	CURVE EXTERNAL DISTANCE

UTILITY SYMBOLOGY

UNDERGROUND UTILITIES

	UTILITY (GENERIC-UNKNOWN)
UT	TELEPHONE
UE	ELECTRIC
UC	CABLE (TV)
UEC	ELECTRIC+CABLE
UET	ELECTRIC+TELEPHONE
UCT	CABLE+TELEPHONE
UECT	ELECTRIC+CABLE+TELEP.
G	GAS LINE
W	WATER LINE
S	SANITARY SEWER (SEPTIC)

ABOVE GROUND UTILITIES (AERIAL)

	UTILITY (GENERIC-UNKNOWN)
T	TELEPHONE
E	ELECTRIC
C	CABLE (TV)
EC	ELECTRIC+CABLE
ET	ELECTRIC+TELEPHONE
AER E&T	ELECTRIC+TELEPHONE
CT	CABLE+TELEPHONE
ECT	ELECTRIC+CABLE+TELEP.
	UTILITY POLE GUY WIRE

PROJECT CONSTRUCTION SYMBOLOGY

PROJECT DESIGN & LAYOUT SYMBOLOGY

CZ	CLEAR ZONE
	PLAN LAYOUT MATCHLINE

PROJECT CONSTRUCTION FEATURES

	TOP OF CUT SLOPE
	TOE OF FILL SLOPE
	STONE FILL
	BOTTOM OF DITCH ℄
	CULVERT PROPOSED
	STRUCTURE SUBSURFACE
PDF	PROJECT DEMARCATION FENCE
BF	BARRIER FENCE
	TREE PROTECTION ZONE (TPZ)
	STRIPING LINE REMOVAL
	SHEET PILES

CONVENTIONAL BOUNDARY SYMBOLOGY

BOUNDARY LINES

TOWN LINE	TOWN BOUNDARY LINE
COUNTY LINE	COUNTY BOUNDARY LINE
STATE LINE	STATE BOUNDARY LINE
	PROPOSED STATE R.O.W. (LIMITED ACCESS)
	PROPOSED STATE R.O.W.
	STATE ROW (LIMITED ACCESS)
	STATE ROW
	TOWN ROW
	PERMANENT EASEMENT LINE (P)
	TEMPORARY EASEMENT LINE (T)
	SURVEY LINE
P/L	PROPERTY LINE (P/L)
SR	SLOPE RIGHTS
6f	6F PROPERTY BOUNDARY
4f	4F PROPERTY BOUNDARY
HAZ	HAZARDOUS WASTE

EPSC LAYOUT PLAN SYMBOLOGY

EPSC MEASURES

	FILTER CURTAIN
	SILT FENCE
	SILT FENCE WOVEN WIRE
	CHECK DAM
	DISTURBED AREAS REQUIRING RE-VEGETATION
	EROSION MATTING

ENVIRONMENTAL RESOURCES

	WETLAND BOUNDARY
	RIPARIAN BUFFER ZONE
	WETLAND BUFFER ZONE
	SOIL TYPE BOUNDARY
T&E	THREATENED & ENDANGERED SPECIES
HAZ	HAZARDOUS WASTE AREA
AG	AGRICULTURAL LAND
HABITAT	FISH & WILDLIFE HABITAT
FLOOD PLAIN	FLOOD PLAIN
OHW	ORDINARY HIGH WATER (OHW)
	STORM WATER
	USDA FOREST SERVICE LANDS
	WILDLIFE HABITAT SUIT/CONN

ARCHEOLOGICAL & HISTORIC

ARCH	ARCHEOLOGICAL BOUNDARY
HISTORIC DIST	HISTORIC DISTRICT BOUNDARY
HISTORIC	HISTORIC AREA
H	HISTORIC STRUCTURE

CONVENTIONAL TOPOGRAPHIC SYMBOLOGY

EXISTING FEATURES

	ROAD EDGE PAVEMENT
	ROAD EDGE GRAVEL
	DRIVEWAY EDGE
	DITCH
	FOUNDATION
	FENCE (EXISTING)
	FENCE WOOD POST
	FENCE STEEL POST
	GARDEN
	ROAD GUARDRAIL
	RAILROAD TRACKS
	CULVERT (EXISTING)
	STONE WALL
	WALL
	WOOD LINE
	BRUSH LINE
	HEDGE
	BODY OF WATER EDGE
	LEDGE EXPOSED

CLD 15-0223 MODEL: Sheet

CONSULTING ENGINEERS

PROJECT NAME:	BRATTLEBORO
PROJECT NUMBER:	BF 2000(26)
FILE NAME: z15j09llegend-31.dgn	PLOT DATE: 12/4/2015
PROJECT LEADER: J. BYATT	DRAWN BY: P. McKECHNIE
DESIGNED BY: L. GREER	CHECKED BY: S. FORTIER
CONVENTIONAL SYMBOLOGY LEGEND SHEET	SHEET 8 OF 26

EXISTING BRIDGE DATA:

ROLLED BEAMS, CONCRETE DECK
LENGTH = 88'-0"
WIDTH = 28'-2" RAIL TO RAIL
BUILT IN 1947

DURABLE 4 INCH WHITE LINE, THERMOPLASTIC
0+23 TO 1+13 SOLID LT & RT

DURABLE 4 INCH YELLOW LINE, THERMOPLASTIC
0+23 TO 1+88 SOLID LT & RT

REMOVING SIGNS
0+24 LT

PORTLAND CEMENT
CONCRETE SIDEWALK, 5 INCH
1+13 TO 1+38 RT

STONE FILL, TYPE I
GEOTEXTILE UNDER STONE FILL
1+12 TO 1+17 LT

CAST-IN-PLACE CONCRETE CURB, TYPE B
(FOR SIDEWALK RAMP TIP DOWN)
1+13 TO 1+21 RT

DETECTABLE WARNING SURFACE
0+26 RT

REHAB. DROP INLETS, CATCH BASINS,
OR MANHOLES, CLASS I
2 - AS SHOWN AT EP
0+19 LT
1+80 RT

CHANGING ELEVATION
OF SEWER MANHOLES
0+13 RT

ADJUST
ELEVATION OF VALVE BOX
0+10 RT

REMOVAL AND DISPOSAL OF GUARDRAIL
1+13 TO 1+46 LT

HD STEEL BEAM GUARDRAIL, GALVANIZED
1+13 TO 1+23 LT
1+13 TO 1+21 RT

ANCHOR FOR STEEL BEAM RAIL
1+15 RT
1+19 RT

DELINEATOR WITH STEEL POST
1+47 LT
1+21 RT

MANUFACTURED TERMINAL SECTION, FLARED
1+23 TO 1+47 LT

CURVE (1)
DELTA = 54°05'35" RT
D = 67°24'24"
R = 85.00'
T = 43.40'
L = 80.25'
E = 10.44'

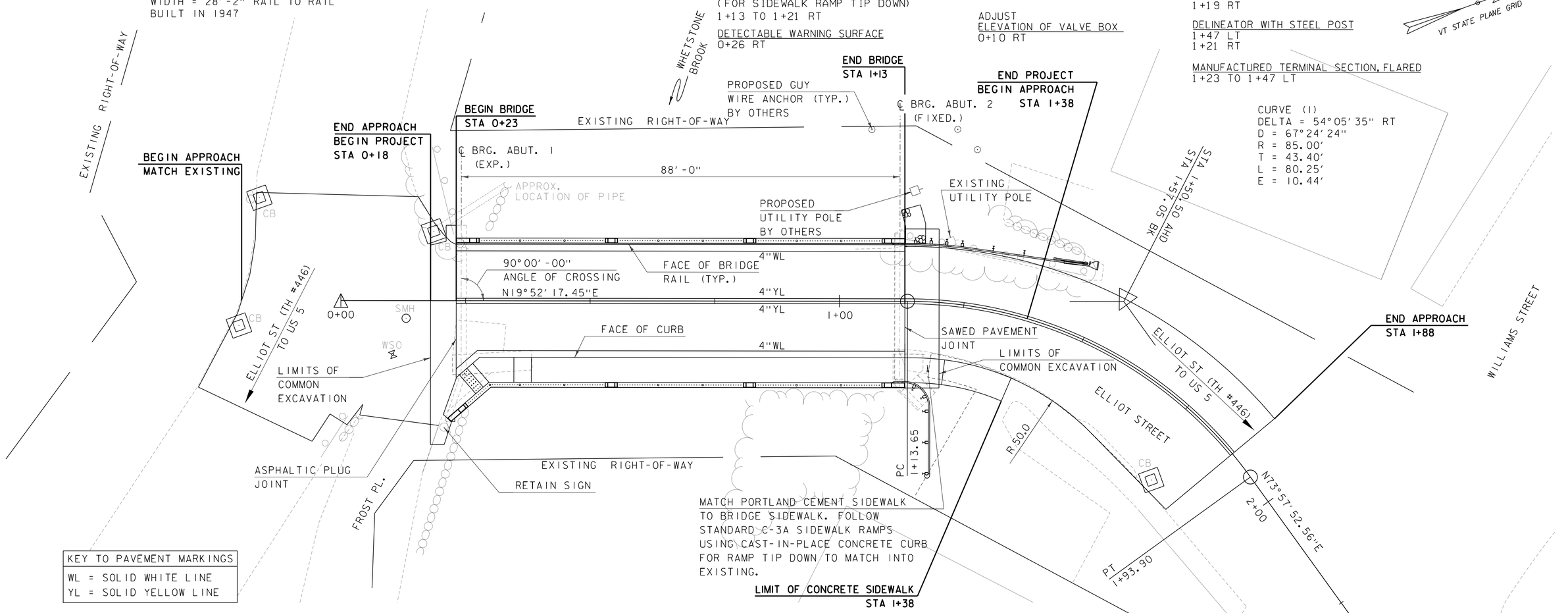

KEY TO PAVEMENT MARKINGS
WL = SOLID WHITE LINE
YL = SOLID YELLOW LINE

BEGIN ALIGNMENT	
NORTH =	127326.27
EAST =	1622191.47
ELEV. =	N/A

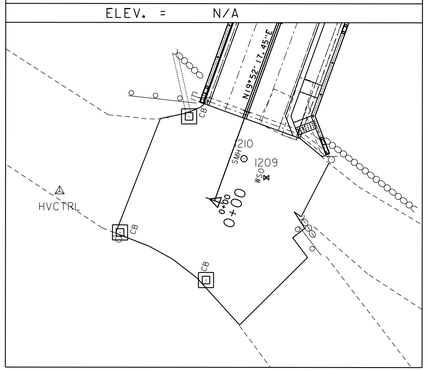

PC 1+13.65	
NORTH =	127483.15
EAST =	1622230.11
ELEV. =	N/A

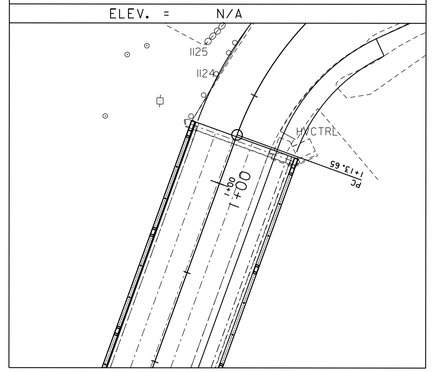

PT 1+93.90	
NORTH =	127535.95
EAST =	1622286.56
ELEV. =	N/A

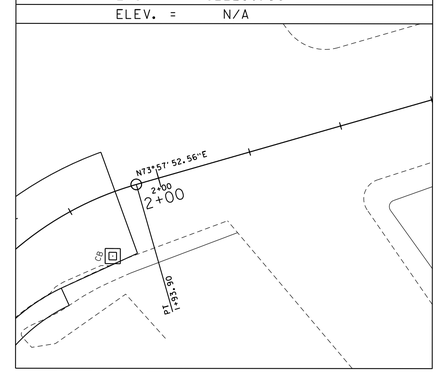

NOTE: NO TREES SHALL BE REMOVED.

0 10 20
(SCALE 1" = 10')

CONSULTING ENGINEERS

PROJECT NAME: BRATTLEBORO	
PROJECT NUMBER: BF 2000(26)	
FILE NAME: z15j091bdr-31.dgn	PLOT DATE: 12/4/2015
PROJECT LEADER: J. BYATT	DRAWN BY: P. McKECHNIE
DESIGNED BY: L. GREER	CHECKED BY: S. FORTIER
LAYOUT SHEET	SHEET 9 OF 26

CLD 15-0223 MODEL: Layout 01

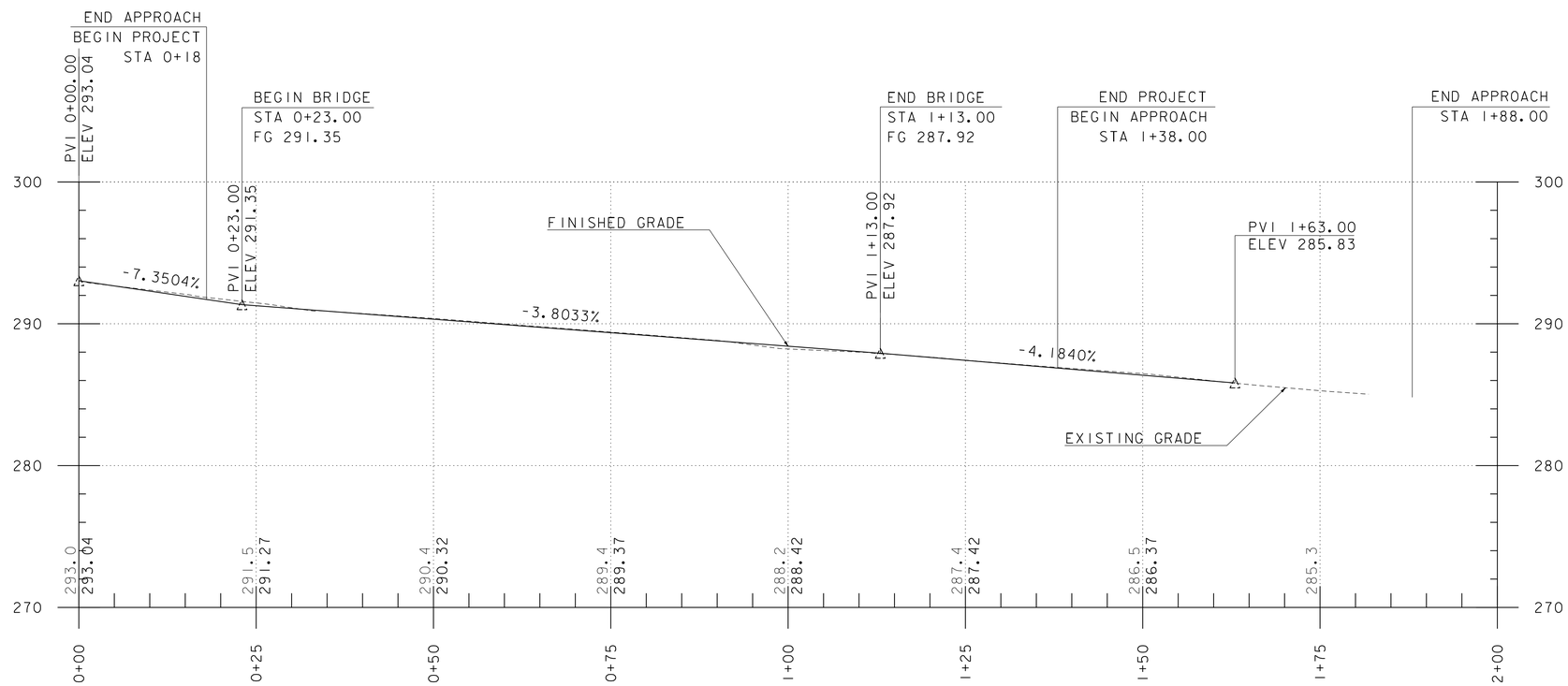

ELLIOT STREET PROFILE

HOR. SCALE 1" = 20'-0"
VER. SCLAE 1" = 10'-0"

NOTES

1. STATIONS AND ELEVATIONS ARE IN FEET.
2. THE ELEVATIONS SHOWN TO THE NEAREST TENTH ARE THE EXISTING GROUND ALONG THE CENTERLINE.
3. THE ELEVATIONS SHOWN TO THE NEAREST HUNDRETH ARE THE FINISHED GRADE ALONG THE CENTERLINE.
4. PROPOSED PROFILE SHOWN IS FOR INFORMATIONAL PURPOSES ONLY. FINAL FINISHED GRADE SHALL BE DETERMINED BY VTRANS AFTER EXISTING TOP OF DECK AND TOP OF BEAM ELEVATIONS ARE SURVEYED. SEE NOTE 21 ON SHEET 3.

PROJECT NAME: BRATTLEBORO	
PROJECT NUMBER: BF 2000(26)	
FILE NAME: z15j091pro-31.dgn	PLOT DATE: 12/4/2015
PROJECT LEADER: J. BYATT	DRAWN BY: J. FOWLER
DESIGNED BY: L. GREER	CHECKED BY: S. FORTIER
PROFILE SHEET	SHEET 10 OF 26

CLD CONSULTING ENGINEERS

CLD 15-0223 MODEL: PROFILE 01

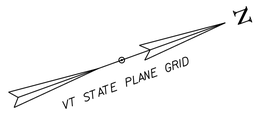

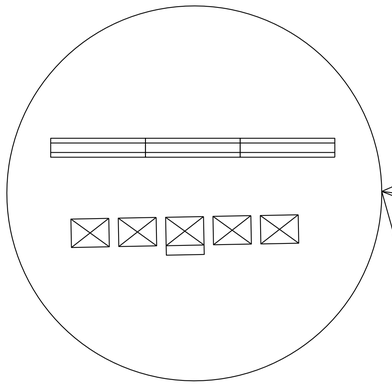

LEGEND

N/C NEW SIGN/CONSTRUCTION ONLY
B/O BLACK/ORANGE
B/W BLACK/WHITE
⊠ TYPE III BARRICADE
⊠ TYPE III BARRICADE (MOD.)
═ TEMPORARY TRAFFIC BARRIER

NOTES

1. THE CONTRACTOR SHALL BE RESPONSIBLE FOR SUPPLYING THE SITE SPECIFIC TRAFFIC CONTROL PACKAGE IDENTIFYING CONSTRUCTION ACTIVITIES BEFORE, DURING AND AFTER THE BRIDGE CLOSURE PERIOD. THE CONTRACTOR SHALL SUBMIT A DETAILED TRAFFIC CONTROL PLAN FOR ALL STAGES OF CONSTRUCTION TO THE PROJECT MANAGER FOR APPROVAL PER SUBSECTION 105.03. ALL COSTS ASSOCIATED WITH THE PREPARATION OF THE TRAFFIC CONTROL PLAN AS WELL AS ANY REQUIRED REVISIONS SHALL PAID FOR UNDER ITEM 900.645, "SPECIAL PROVISION (TRAFFIC CONTROL, ALL-INCLUSIVE)".

2. THE CONTRACTOR SHALL BE RESPONSIBLE FOR ALL SIGNS AND BARRICADES SHOWN ON THIS SHEET. THEY SHALL BE PAID FOR UNDER ITEM 900.645, "SPECIAL PROVISION (TRAFFIC CONTROL, ALL-INCLUSIVE)".

3. ANY TEMPORARY TRAFFIC BARRIER REQUIRED SHALL BE CONSIDERED INCIDENTAL TO PAY ITEM 900.645, "SPECIAL PROVISION (TRAFFIC CONTROL, ALL-INCLUSIVE)" AND FURNISHED IN ACCORDANCE WITH SECTION 621.

4. THE CONTRACTOR SHALL PLACE ONE PORTABLE CHANGABLE MESSAGE SIGN ON EACH END OF PROJECT A MINIMUM OF TWO WEEKS PRIOR TO THE CLOSURE OF ELLIOT STREET (TH #446). THE MESSAGE SIGNS SHALL INDICATE THE ANTICIPATED BRIDGE CLOSURE PERIOD.

R11-2 B/W SIGN
MOUNTED ON TYPE I
II BARRICADE
(MODIFIED)

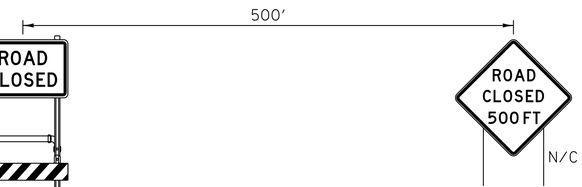

W20-3 B/O

LOCATE ON FROST PLACE, FROST STREET
ELLIOT STREET (TH #446), AND WILLIAM STREET
AS WELL AS BIRGE STREET AND ESTEY STREET TO THE WEST

SCALE 1" = 40'-0"
40 0 40

PROJECT NAME: BRATTLEBORO	
PROJECT NUMBER: BF 2000(26)	
FILE NAME: z15j091bdrtcp-31.dgn	PLOT DATE: 12/4/2015
PROJECT LEADER: J. BYATT	DRAWN BY: J. FOWLER
DESIGNED BY: L. GREER	CHECKED BY: S. FORTIER
BRIDGE CLOSURE SIGNAGE SHEET	SHEET 11 OF 26

CLD 15-0223 MODEL: Layout 01

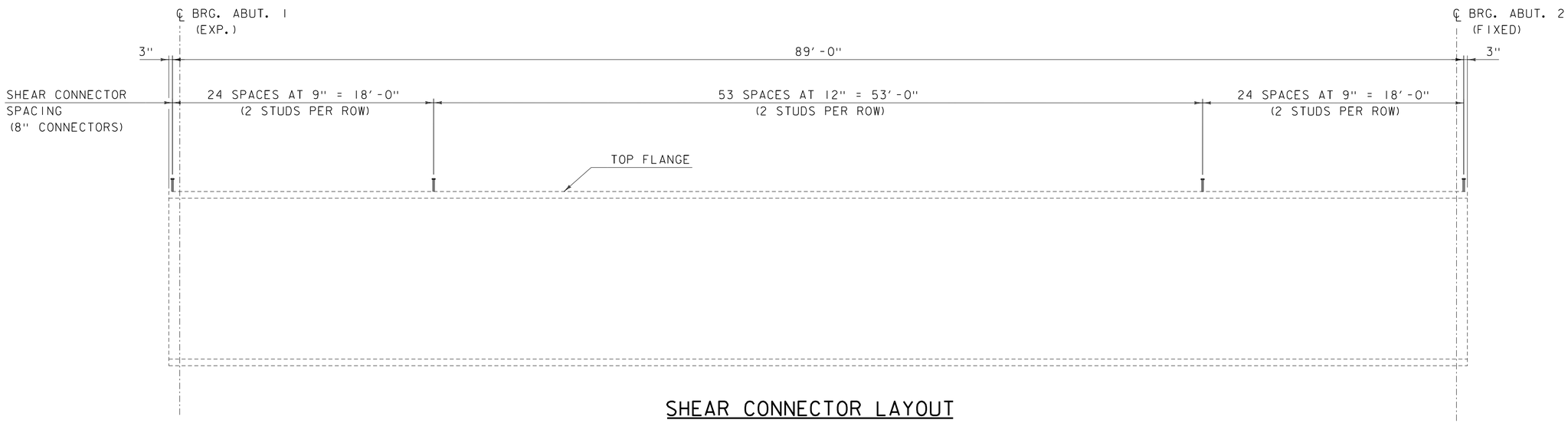

SHEAR CONNECTOR LAYOUT

HORIZONTAL SCALE: 1" = 1'-0"
VERTICAL SCALE: 1/4" = 1'-0"

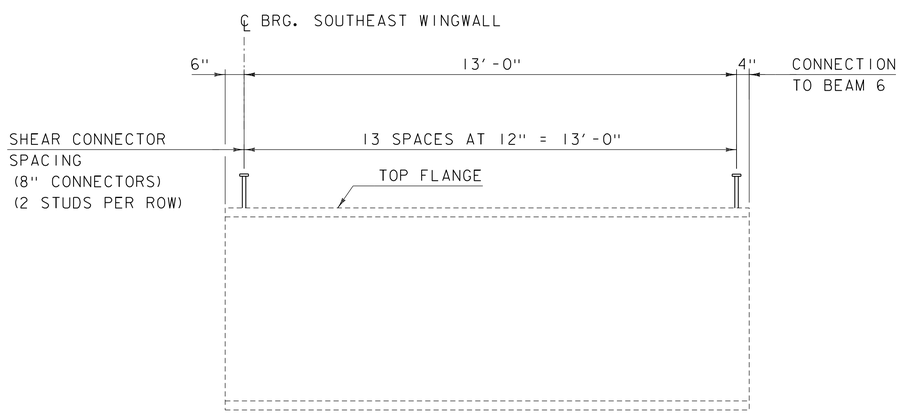

SHEAR CONNECTOR LAYOUT FOR SIDEWALK RAMP FASCIA BEAM

HORIZONTAL SCALE: 1/2" = 1'-0"
VERTICAL SCALE: 1/8" = 1'-0"

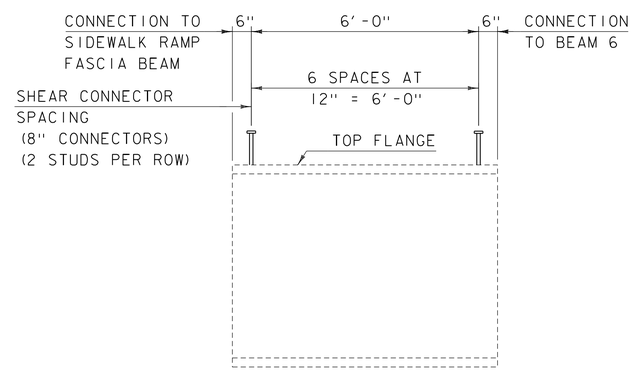

SHEAR CONNECTOR LAYOUT FOR SIDEWALK RAMP INTERIOR BEAM

HORIZONTAL SCALE: 1/2" = 1'-0"
VERTICAL SCALE: 1/8" = 1'-0"

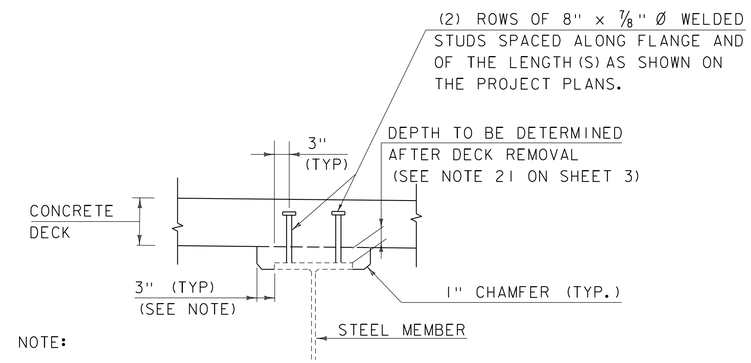

NOTE:

THE 3" HORIZONTAL SECTION MAY BE ELIMINATED FOR FORMING SYSTEMS DESIGNED FOR THE CONSTRUCTION OF VERTICAL HAUNCHES. ANY VOIDS RESULTING FROM FORMING SYSTEM ELEMENTS SHALL BE FILLED WITH JOINT SEALER, POLYURETHANE MEETING THE REQUIREMENTS OF SECTION 524. THE COST OF THE JOINT SEALER, POLYURETHANE SHALL BE INCIDENTAL TO THE ADJACENT CONCRETE.

HAUNCH AND SHEAR CONNECTOR DETAIL

SCALE: 3/4" = 1'-0"

CLD 15-0223 MODEL: TYP03

PROJECT NAME: BRATTLEBORO	
PROJECT NUMBER: BF 2000(26)	
FILE NAME: z15j091typ-31.dgn	PLOT DATE: 12/4/2015
PROJECT LEADER: J. BYATT	DRAWN BY: M. SMITH
DESIGNED BY: N. CARON	CHECKED BY: S. BEAUMONT
SHEAR CONNECTOR DETAILS SHEET	SHEET 12 OF 26

CLD CONSULTING ENGINEERS

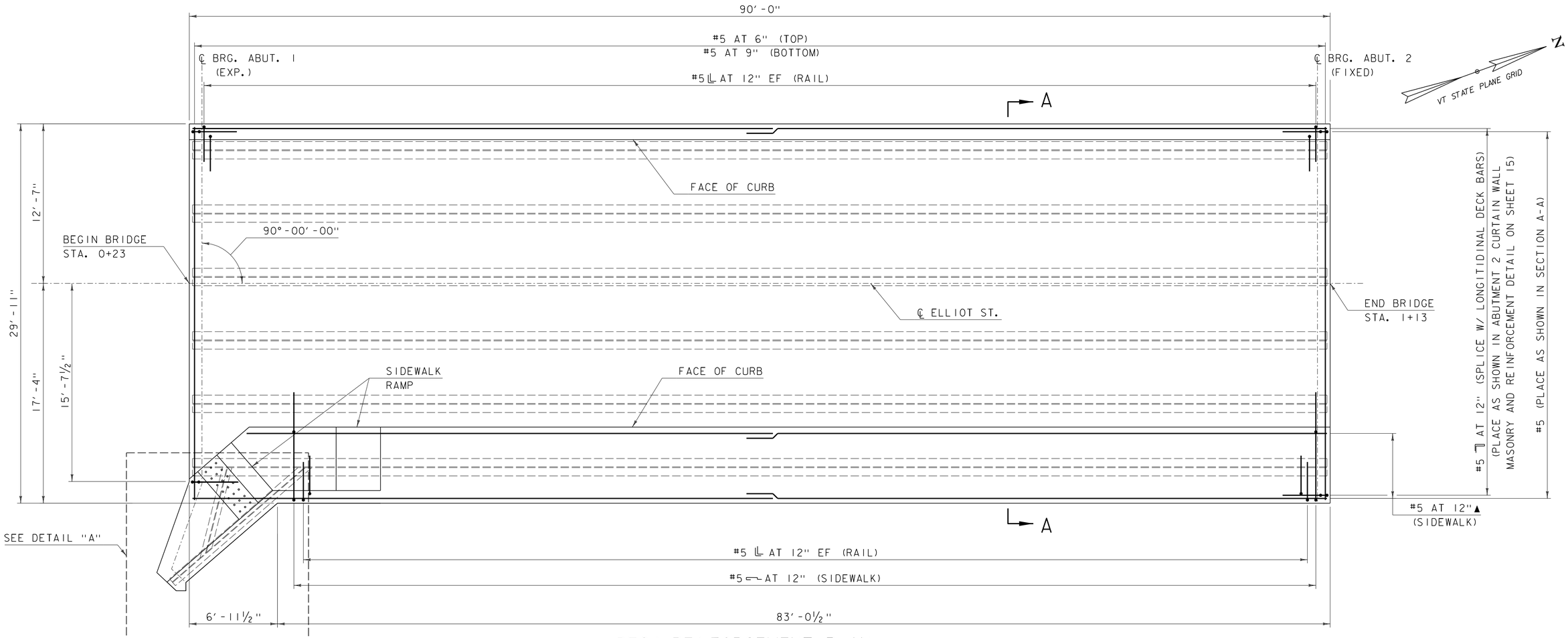

DECK REINFORCEMENT PLAN

SCALE: ¼" = 1'-0"

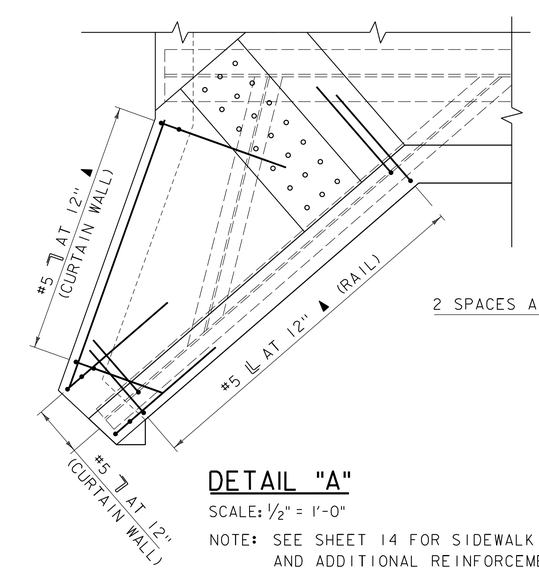

DETAIL "A"

SCALE: ½" = 1'-0"

NOTE: SEE SHEET 14 FOR SIDEWALK RAMP MASONRY AND ADDITIONAL REINFORCEMENT DETAILS.

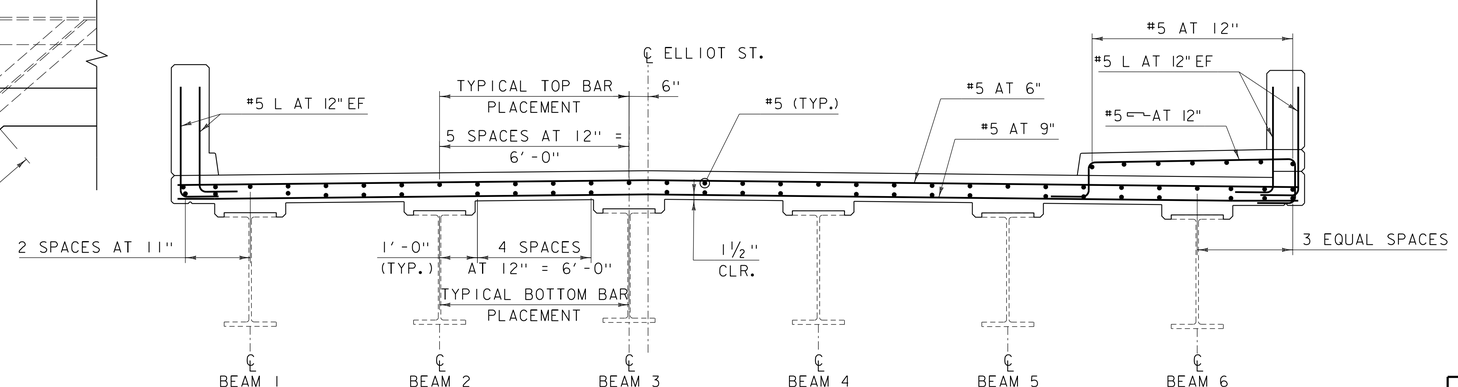

SECTION A-A

SCALE: ½" = 1'-0"

NOTES:

1. 3" CLEAR, UNLESS OTHERWISE SPECIFIED ON THE PLANS.
2. 3'-0" BAR LAP UNLESS OTHERWISE SPECIFIED ON THE PLANS.
3. 1'-0" HOOK UNLESS OTHERWISE SPECIFIED ON THE PLANS.
4. EF = EACH FACE
5. SEE SHEET 18 FOR RAIL LAYOUT SHEET.

PROJECT NAME: BRATTLEBORO	
PROJECT NUMBER: BF 2000(26)	
FILE NAME: z15j091typ-31.dgn	PLOT DATE: 12/4/2015
PROJECT LEADER: J. BYATT	DRAWN BY: M. SMITH
DESIGNED BY: S. BEAUMONT	CHECKED BY: J. FRENCH
DECK DETAILS SHEET 1	SHEET 13 OF 26

CLD CONSULTING ENGINEERS

CLD 15-0223 MODEL: TYP04

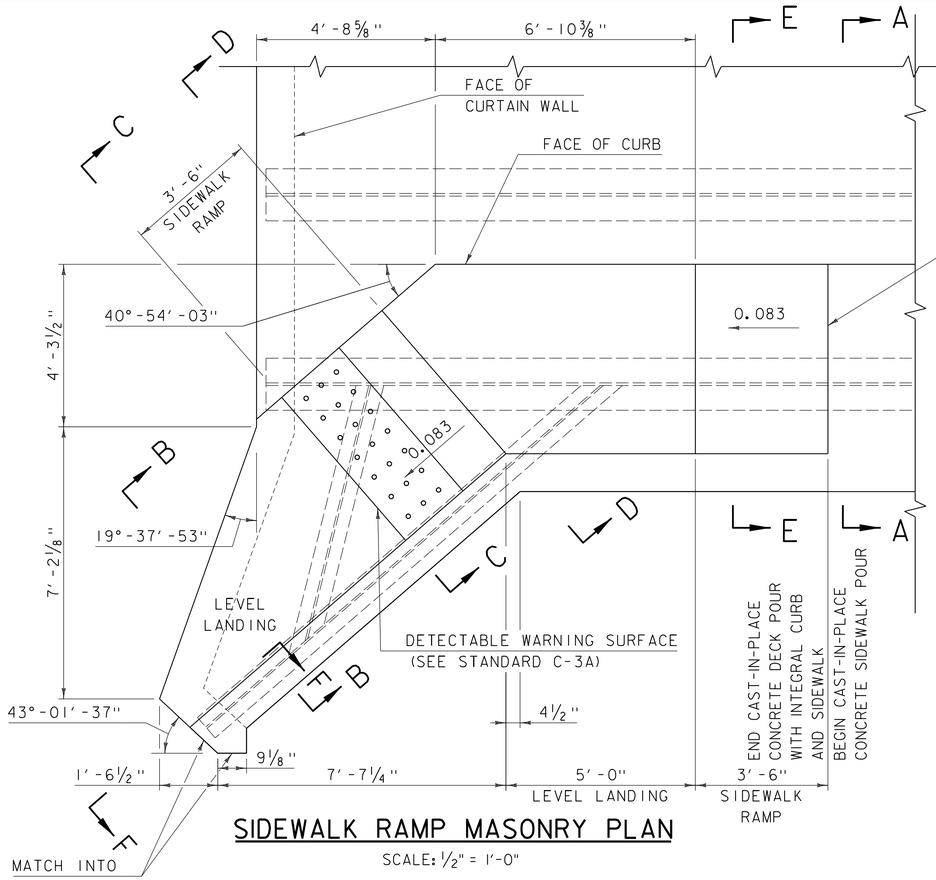

SIDEWALK RAMP MASONRY PLAN

SCALE: 1/2" = 1'-0"

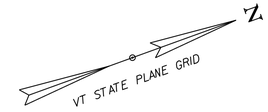

NOTES:

1. 3" CLEAR, UNLESS OTHERWISE SPECIFIED ON THE PLANS.
2. 3'-0" BAR LAP UNLESS OTHERWISE SPECIFIED ON THE PLANS.
3. EF = EACH FACE
4. SEE SHEET 13 FOR SECTION A-A.
5. SEE TYPICAL CURTAIN WALL SECTION ON SHEET 15 FOR MASONRY AND REINFORCEMENT DETAILS AND SECTION F-F THIS SHEET FOR REINFORCEMENT LAYOUT IN CURTAIN WALL AT SIDEWALK RAMP.
6. ALL DIMENSIONS ARE BARS ON FIELD MEASUREMENTS AND ARE APPROXIMATE. THE CONTRACTOR SHALL VERIFY ALL EXISTING DIMENSIONS.

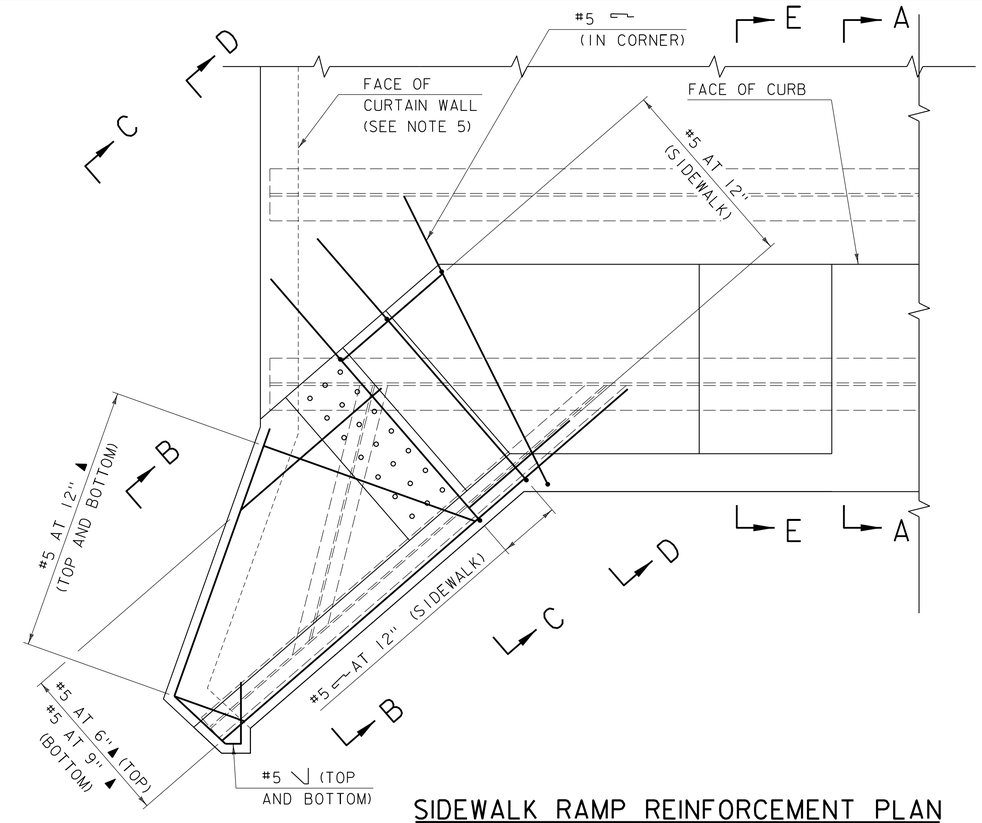

SIDEWALK RAMP REINFORCEMENT PLAN

SCALE: 1/2" = 1'-0"

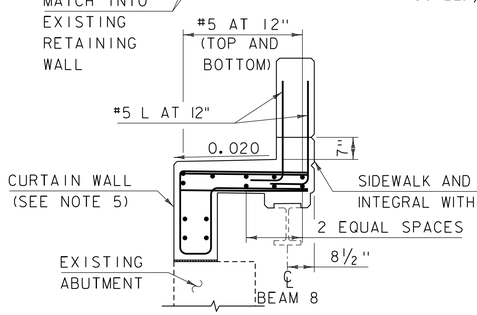

SECTION B-B

SCALE: 1/2" = 1'-0"

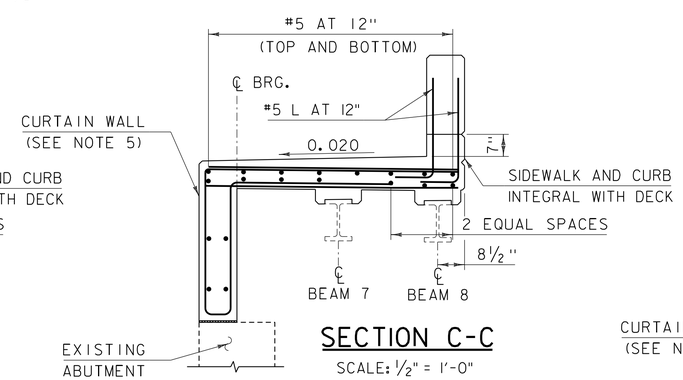

SECTION C-C

SCALE: 1/2" = 1'-0"

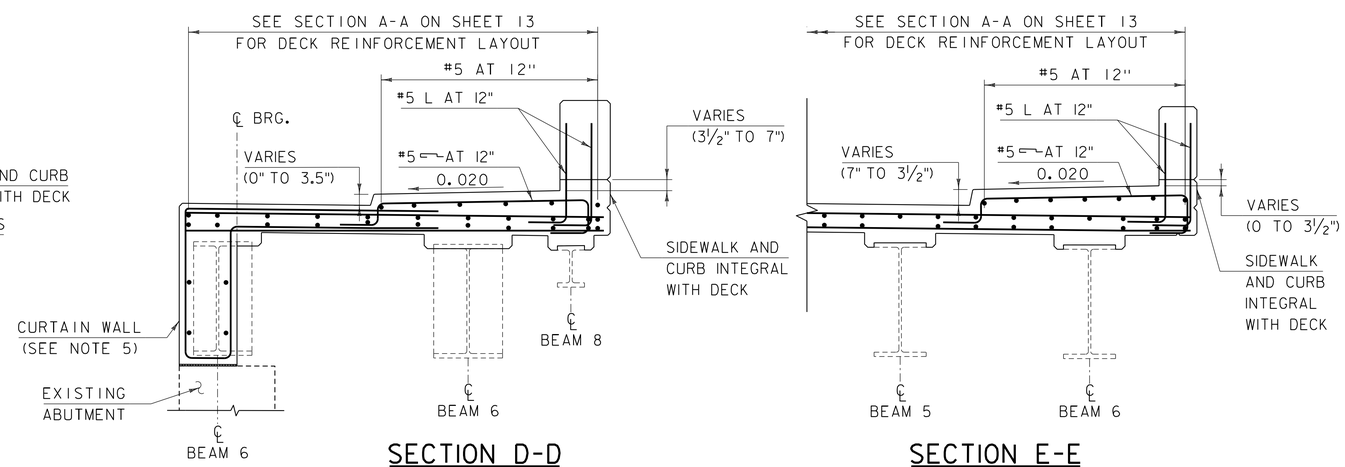

SECTION D-D

SCALE: 1/2" = 1'-0"

SECTION E-E

SCALE: 1/2" = 1'-0"

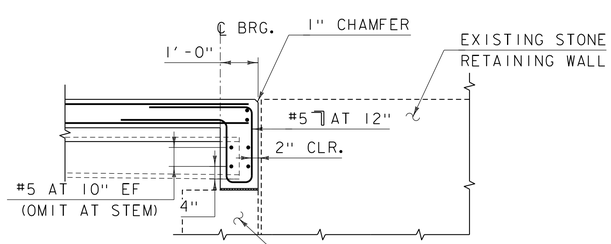

SECTION F-F

SCALE: 1/2" = 1'-0"

PROJECT NAME: BRATTLEBORO	
PROJECT NUMBER: BF 2000(26)	
FILE NAME: z15j091typ-31.dgn	PLOT DATE: 12/4/2015
PROJECT LEADER: J. BYATT	DRAWN BY: M. SMITH
DESIGNED BY: S. BEAUMONT	CHECKED BY: J. FRENCH
DECK DETAILS SHEET 2	SHEET 14 OF 26

CLD 15-0223 MODEL: TYP05

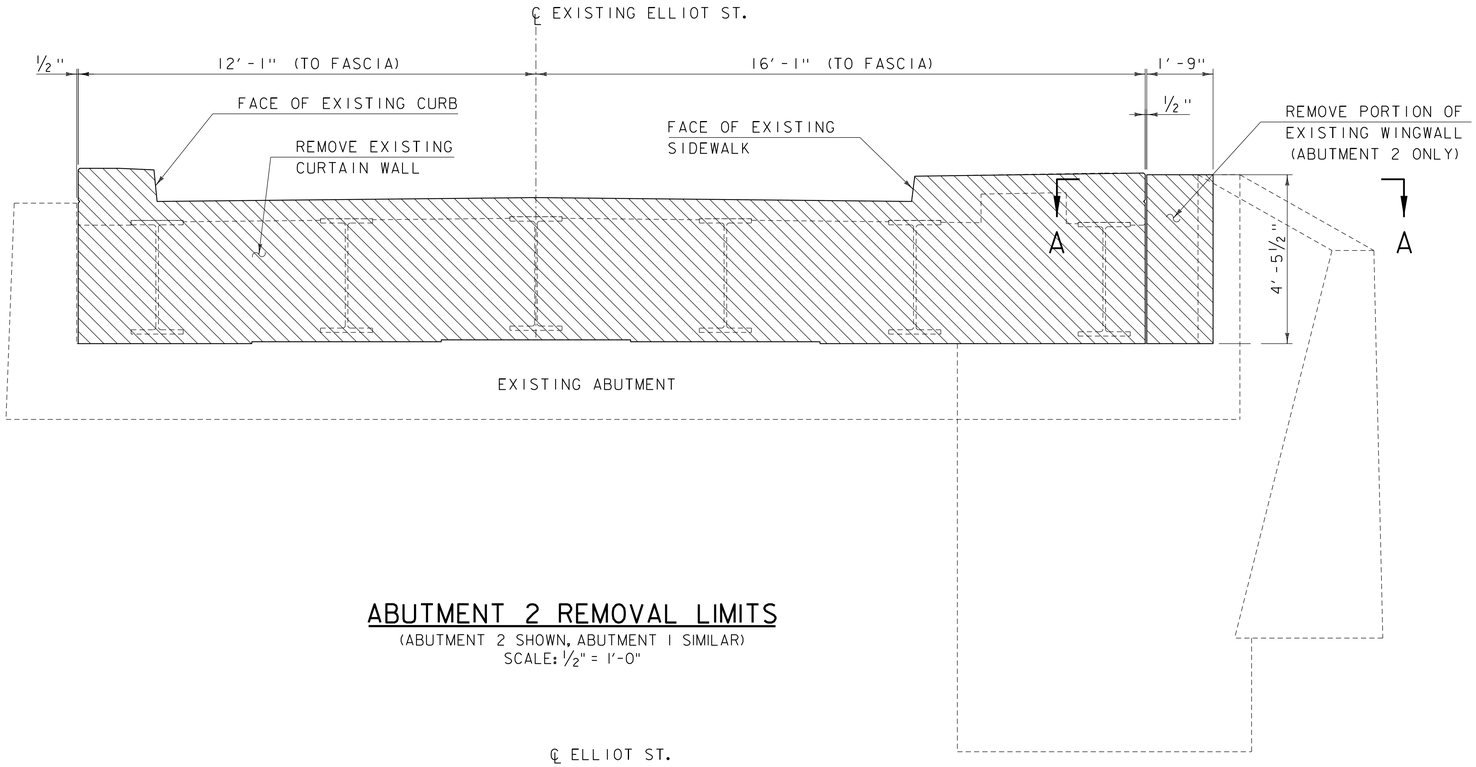

ABUTMENT 2 REMOVAL LIMITS

(ABUTMENT 2 SHOWN, ABUTMENT 1 SIMILAR)
SCALE: ½" = 1'-0"

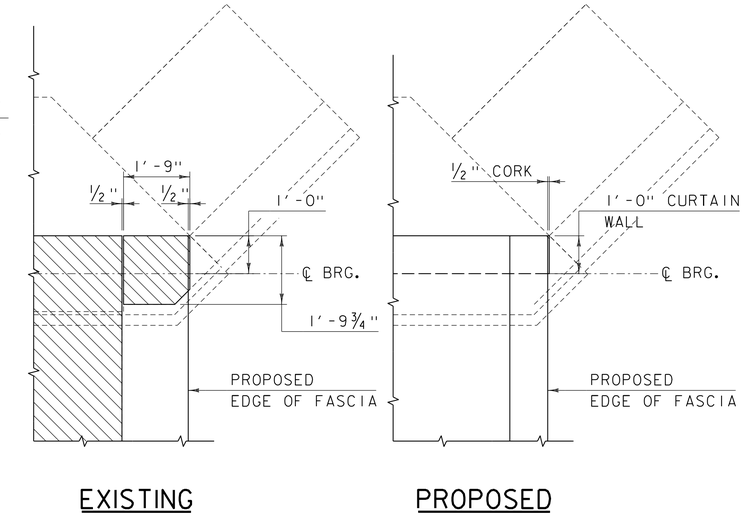

SECTION A-A

SCALE: ½" = 1'-0"

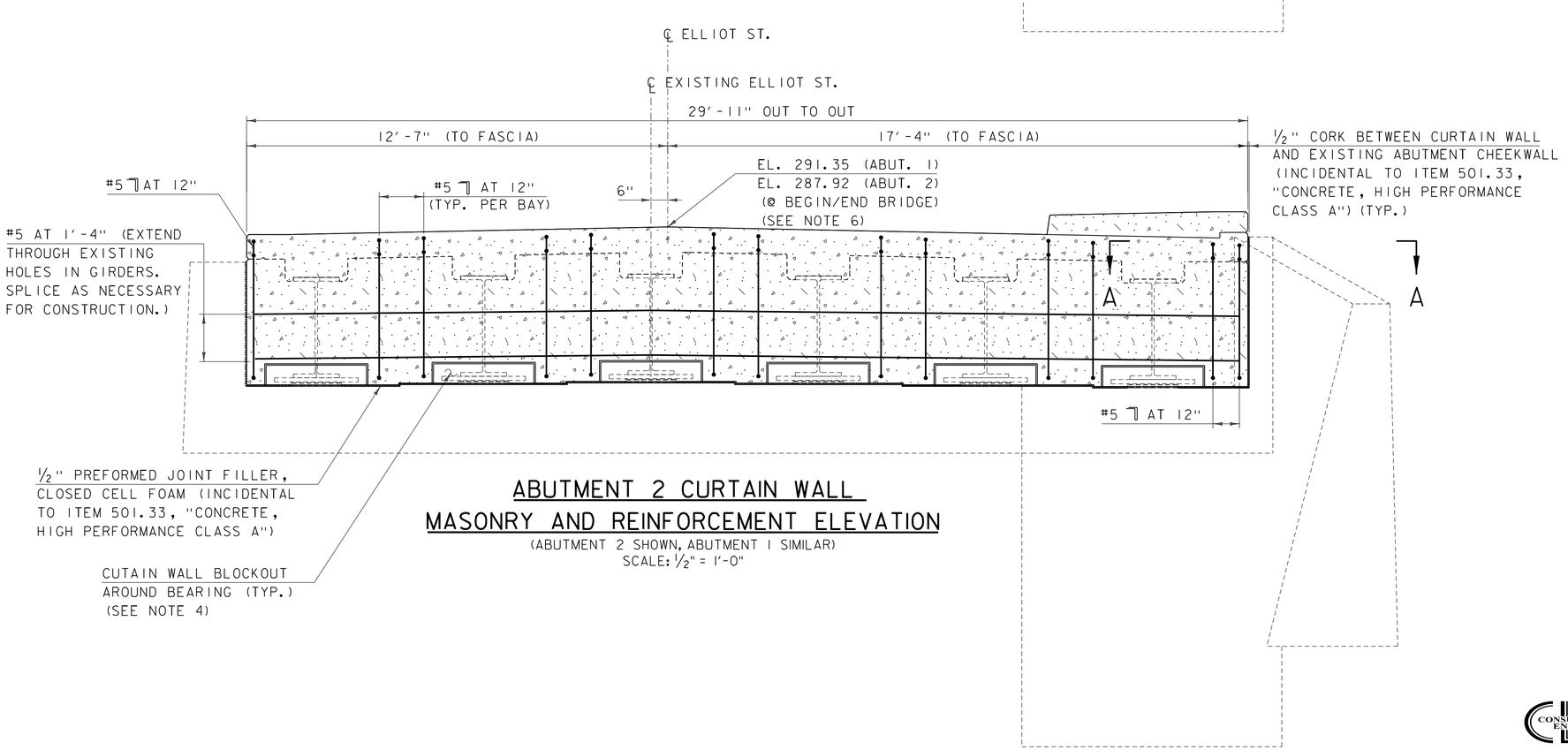

ABUTMENT 2 CURTAIN WALL MASONRY AND REINFORCEMENT ELEVATION

(ABUTMENT 2 SHOWN, ABUTMENT 1 SIMILAR)
SCALE: ½" = 1'-0"

PARTIAL REMOVAL OF STRUCTURE (SEE NOTE 18 ON SHEET 3)

CONCRETE, HIGH PERFORMANCE CLASS A

NOTES:

1. 3" CLEAR, UNLESS OTHERWISE SPECIFIED ON THE PLANS.
2. 3'-0" BAR LAP UNLESS OTHERWISE SPECIFIED ON THE PLANS.
3. EF = EACH FACE
4. SEE SHEET 16 FOR TYPICAL CURTAIN WALL SECTION AND CURTAIN WALL BLOCKOUT AROUND BEARINGS DETAILS.
5. SEE SECTION F-F ON SHEET 14 FOR CURTAIN WALL AT SIDEWALK RAMP REINFORCEMENT LAYOUT.
6. ELEVATIONS ARE FOR INFORMATIONAL PURPOSES ONLY. FINAL FINISHED GRADE SHALL BE DETERMINED BY VTRANS AFTER EXISTING TOP OF DECK AND TOP OF BEAM ELEVATIONS ARE SURVEYED. SEE NOTE 21 ON SHEET 3.

PROJECT NAME: BRATTLEBORO
PROJECT NUMBER: BF 2000(26)

FILE NAME: z15j091typ-31.dgn
PROJECT LEADER: J. BYATT
DESIGNED BY: S. BEAUMONT
REMOVAL & CURTAIN WALL DETAILS SHEET 1
PLOT DATE: 12/4/2015
DRAWN BY: M. SMITH
CHECKED BY: J. FRENCH
SHEET 15 OF 26

CONSULTING ENGINEERS

CLD 15-0223 MODEL: TYP06

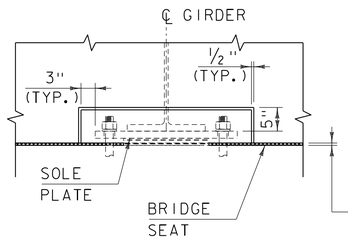

SECTION A-A

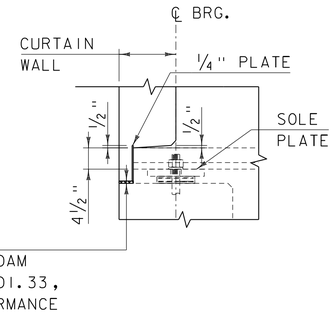

SECTION B-B

NOTES:

1. 3" CLEAR, UNLESS OTHERWISE SPECIFIED ON THE PLANS.
2. 3'-0" BAR LAP UNLESS OTHERWISE SPECIFIED ON THE PLANS.
3. EF = EACH FACE
4. SEE SHEET 15 FOR CURTAIN WALL MASONRY AND REINFORCEMENT ELEVATION.

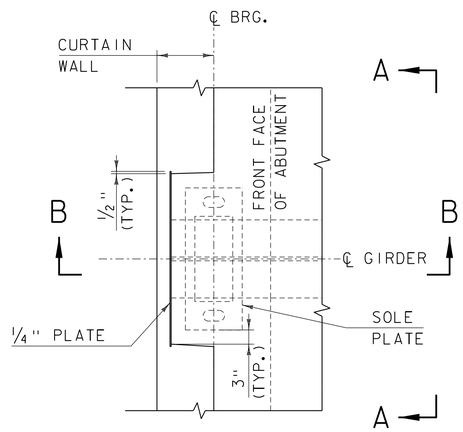

PLAN VIEW

CONCRETE CURTAIN WALL BLOCKOUTS AROUND BEARINGS

SCALE: 3/4" = 1'-0"

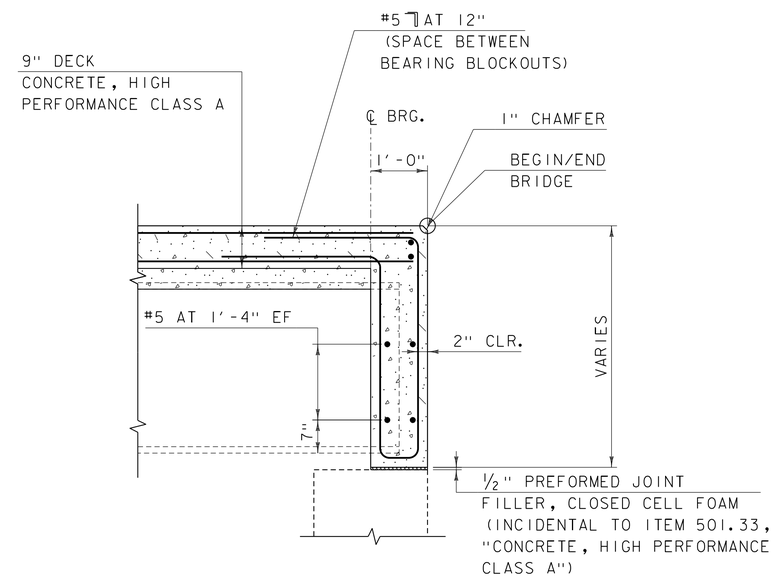

TYPICAL CURTAIN WALL SECTION

SCALE: 3/4" = 1'-0"

PROJECT NAME: BRATTLEBORO	
PROJECT NUMBER: BF 2000(26)	
FILE NAME: z15j091typ-31.dgn	PLOT DATE: 12/4/2015
PROJECT LEADER: J. BYATT	DRAWN BY: M. SMITH
DESIGNED BY: S. BEAUMONT	CHECKED BY: N. CARON
REMOVAL & CURTAIN WALL DETAILS SHEET 2	SHEET 16 OF 26

CLD 15-0223 MODEL: TYP07

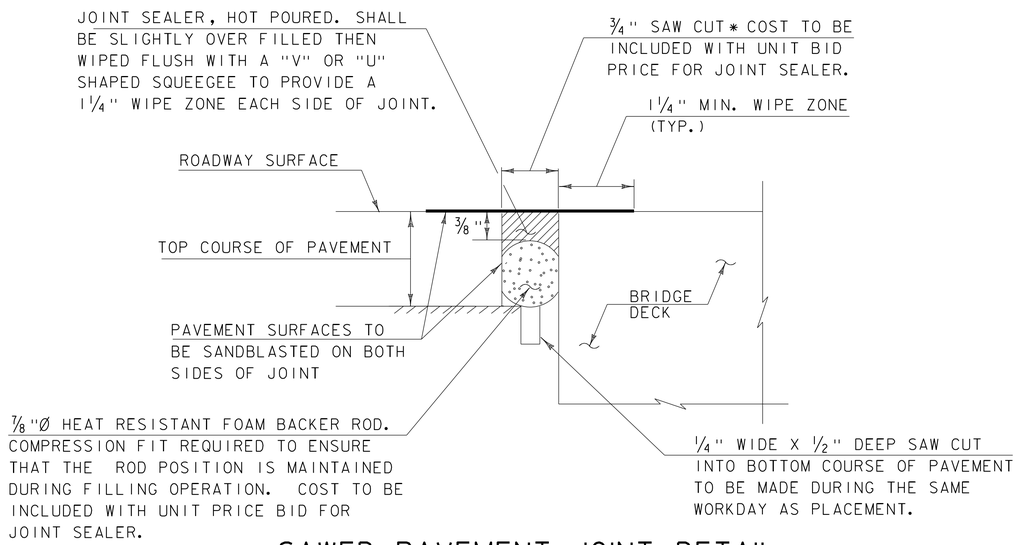

SAWED PAVEMENT JOINT DETAIL

(NOT TO SCALE)

* JOINT IS TO BE LOCATED ACCURATELY BY STRING LINING, OR OTHER MEANS, PRIOR TO PAVING, SO THAT THE SAW CUT WILL BE MADE DIRECTLY OVER THE END OF CONCRETE DECK. JOINT SHALL BE CUT DRY IN A SINGLE PASS AND BE SEALED WITHIN 24 HOURS OR PRIOR TO EXPOSURE TO TRAFFIC. JOINT SHALL BE CLEANED PRIOR TO APPLYING THE JOINT SEALER. ALL WORK SHALL BE PAID UNDER ITEM 524.11, "JOINT SEALER, HOT POURED".

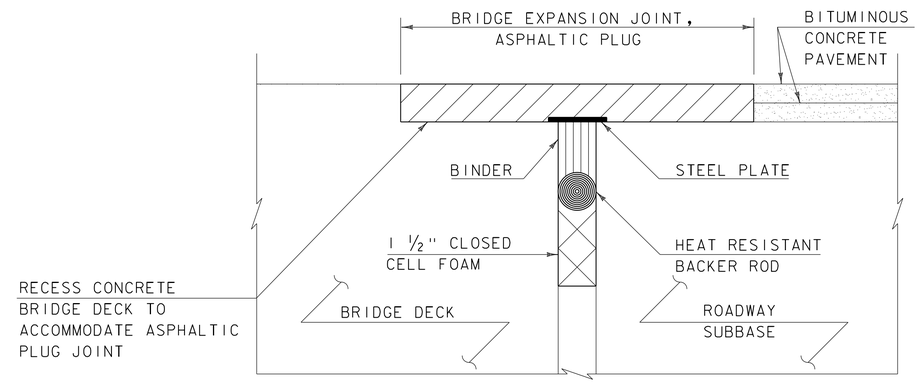

ASPHALTIC PLUG-TYPE JOINT DETAIL

(NOT TO SCALE)

NOTE: SEE STANDARD SD-516.10 FOR ADDITIONAL INFORMATION.

PROJECT NAME: BRATTLEBORO	
PROJECT NUMBER: BF 2000(26)	
FILE NAME: z15j091typ-31.dgn	PLOT DATE: 12/4/2015
PROJECT LEADER: J. BYATT	DRAWN BY: M. SMITH
DESIGNED BY: N. CARON	CHECKED BY: S. BEAUMONT
JOINT DETAILS SHEET	SHEET 17 OF 26

CONSULTING ENGINEERS

CLD 15-0223 MODEL: TYP08

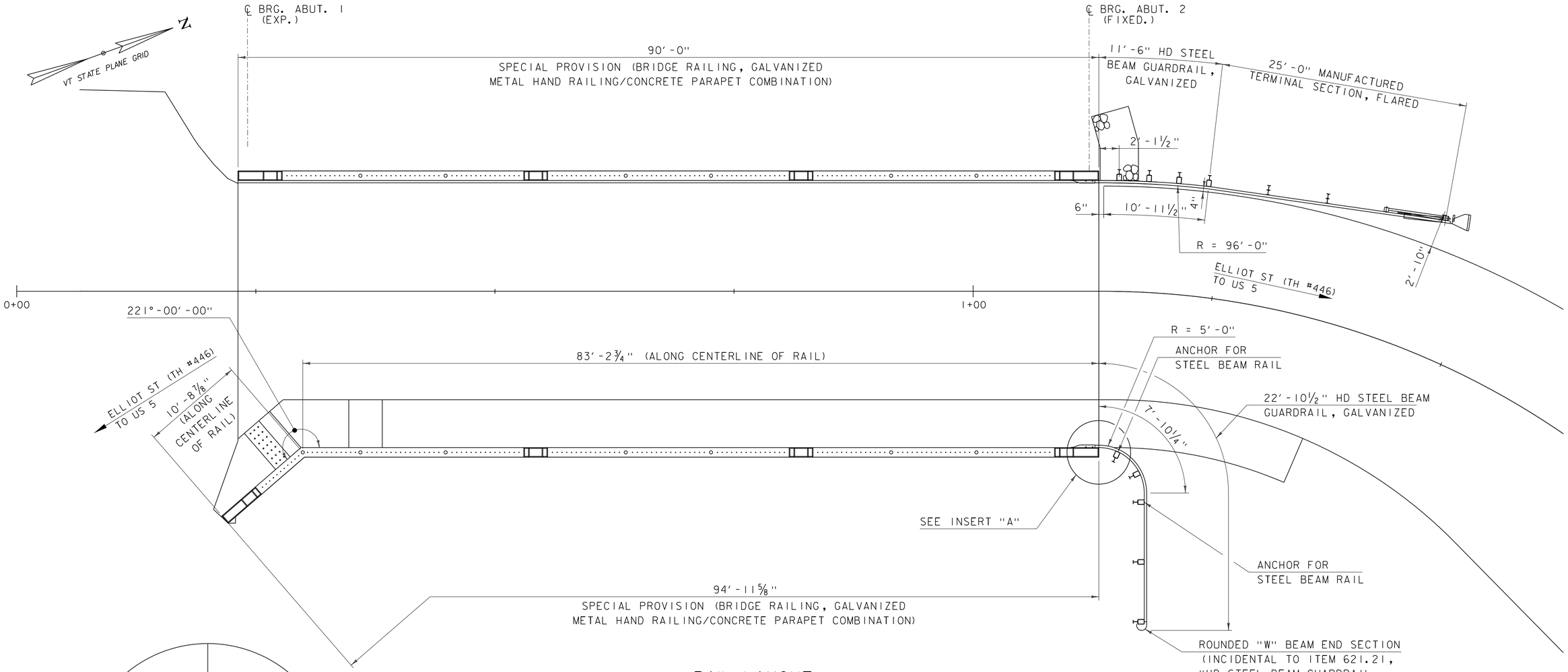

RAIL LAYOUT

SCALE: 3/16" = 1'-0"

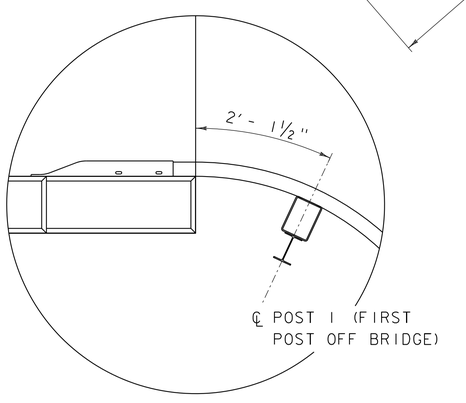

INSERT "A"

SCALE: ¾" = 1'-0"

NOTES:

1. REFER TO STANDARDS G-1 AND G-1d.
2. SEE BRIDGE AND APPROACH RAIL DETAILS ON SHEETS 19 TO 23.

PROJECT NAME: BRATTLEBORO	
PROJECT NUMBER: BF 2000(26)	
FILE NAME: z15j091rail_bdr-31.dgn	PLOT DATE: 12/4/2015
PROJECT LEADER: J. BYATT	DRAWN BY: M. SMITH
DESIGNED BY: M. SMITH	CHECKED BY: N. CARON
RAIL LAYOUT SHEET	SHEET 18 OF 26

CLD CONSULTING ENGINEERS

CLD 15-0223 MODEL: Sheet01

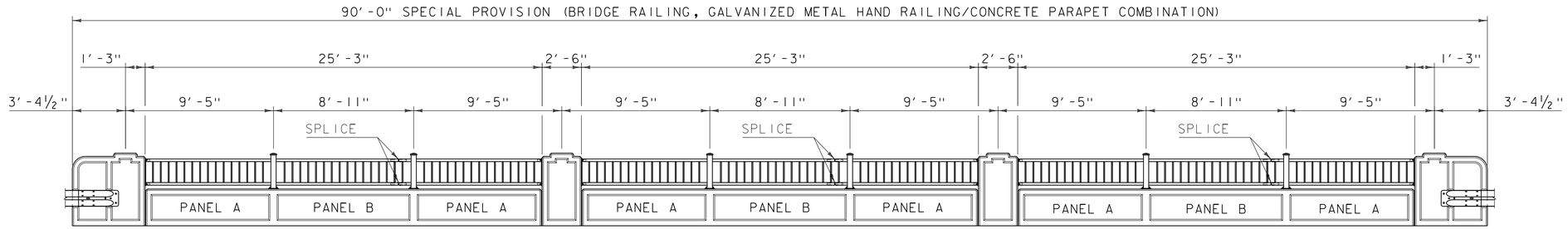

WEST RAIL

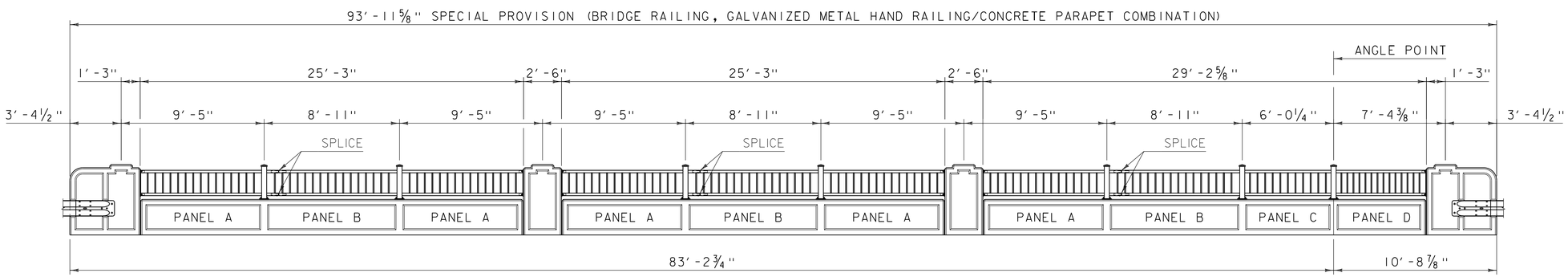

EAST RAIL

BRIDGE RAIL ELEVATION (INTERIOR FACE)

SCALE: ¼" = 1'-0"

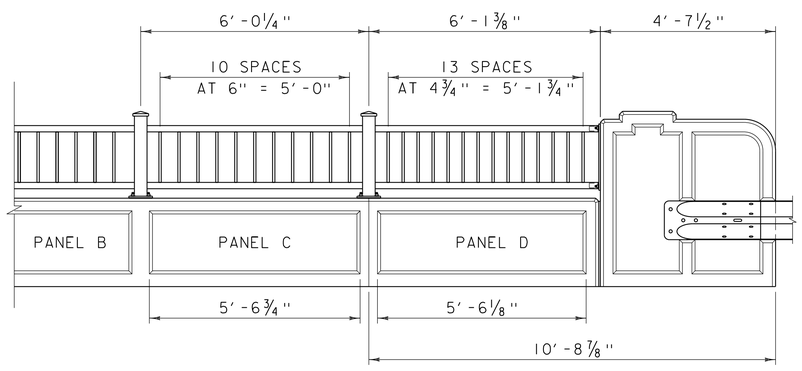

BRIDGE RAIL ELEVATION (INTERIOR FACE) AT SIDEWALK RAMP

SCALE: ½" = 1'-0"

NOTES:

1. ALL DIMENSIONS ARE MEASURED ALONG CENTERLINE OF RAIL UNLESS NOTED OTHERWISE ON PLANS.
2. THE BRIDGE PLAQUE FURNISHED BY THE AGENCY SHALL BE CAST INTO THE BACKFACE OF THE CONCRETE RAIL AT THE NORTHEAST END PILASTER. SEE STANDARD SD-502.00 FOR ADDITIONAL INFORMATION.

PROJECT NAME: BRATTLEBORO	
PROJECT NUMBER: BF 2000(26)	
FILE NAME: z15j09lrail_bdr-31.dgn	PLOT DATE: 12/4/2015
PROJECT LEADER: J. BYATT	DRAWN BY: M. SMITH
DESIGNED BY: M. SMITH	CHECKED BY: N. CARON
BRIDGE RAIL DETAILS SHEET 1	SHEET 19 OF 26

CONSULTING ENGINEERS

CLD 15-0223 MODEL: Sheet02

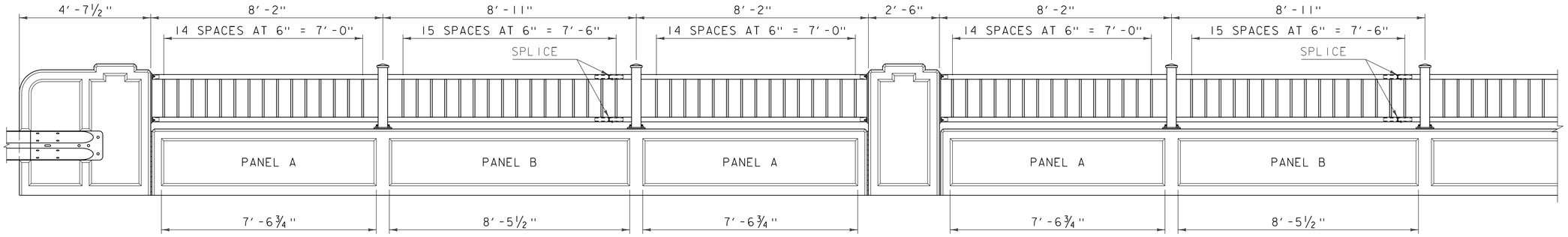

BRIDGE RAIL ELEVATION (INTERIOR FACE)

SCALE: ½" = 1'-0"

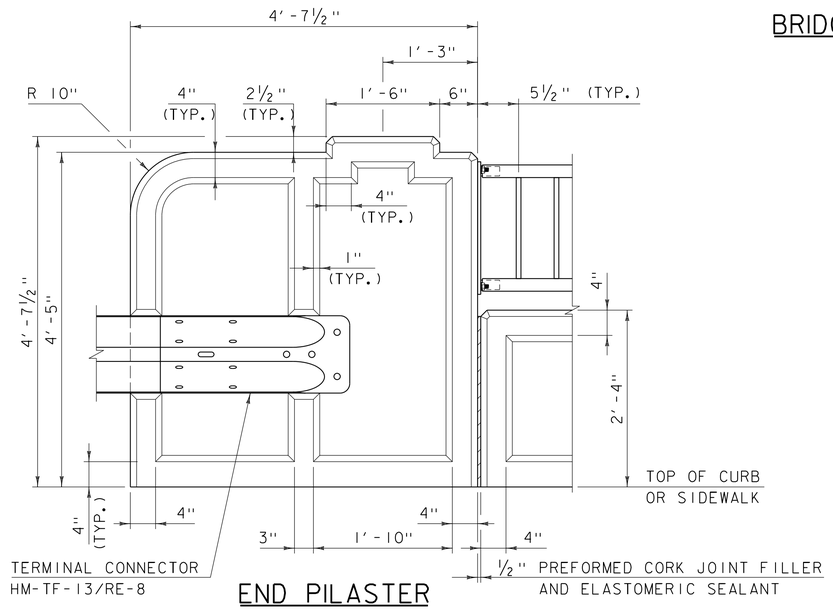

END PILASTER

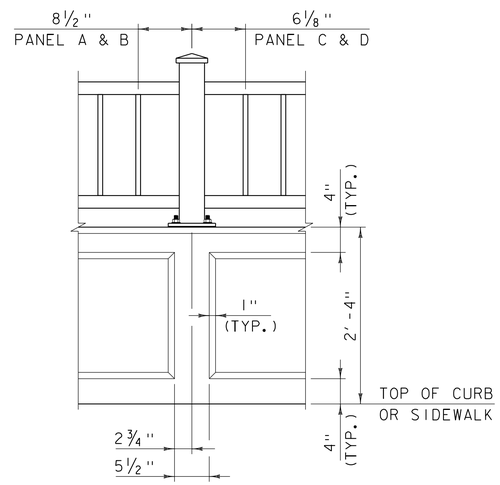

POST

BRIDGE RAIL CONCRETE DETAILS

SCALE: 1" = 1'-0"

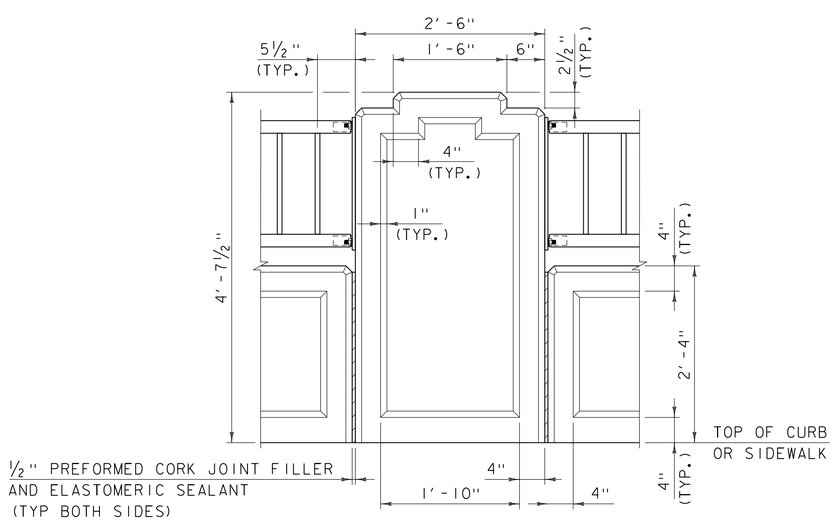

INTERMEDIATE PILASTER

BRIDGE RAIL NOTES

1. ALL DIMENSIONS TO FACE OF CONCRETE UNLESS NOTED OTHERWISE.
2. RAIL POSTS SHALL BE SET NORMAL TO GRADE.
3. BRIDGE RAIL SHALL PAID FOR UNDER ITEM 900.640, "SPECIAL PROVISION (BRIDGE RAILING, GALVANIZED METAL HAND RAILING/CONCRETE PARAPET COMBINATION)".
4. REINFORCING STEEL SHALL CONFORM TO SECTION 507 FOR LEVEL 1 EPOXY COATED REINFORCMENT AND SHALL BE PAID FOR UNDER ITEM 900.640, "SPECIAL PROVISION (BRIDGE RAILING, GALVANIZED METAL HAND RAILING/CONCRETE PARAPET COMBINATION)".
5. METAL HAND RAILING, TO INCLUDE STEEL PIPES, PLATES AND HARDWARE, SHALL BE PAID FOR UNDER ITEM 900.640, "SPECIAL PROVISION (BRIDGE RAILING, GALVANIZED METAL HAND RAILING/CONCRETE PARAPET COMBINATION)".
6. STEEL PIPES FOR POSTS, TOP AND BOTTOM RAIL, AND PALINGS SHALL BE SEAMLESS, CONFORMING TO SUBSECTION 732.01.
7. STEEL FOR BASE AND ANCHORAGE PLATES SHALL CONFORM TO SUBSECTION 732.03(b).
8. HARDWARE FOR ANCHOR BOLT ASSEMBLIES SHALL CONFORM TO SUBSECTION 732.03(d).
9. ⅛" PAD SHALL CONFORM TO SUBSECTION 731.01 OR 731.02.
10. ALL EXPOSED CUT OR SHEARED EDGES OF STEEL COMPONENTS SHALL BE ROUNDED TO A 1/16" RADIUS AND BE FREE OF BURRS.
11. ALL PARTS SHALL BE GALVANIZED AFTER FABRICATION IN ACCORDANCE WITH AASHTO M 111M/M 111, EXCEPT HARDWARE, WHICH SHALL MEET THE REQUIREMENTS OF AASHTO M 232M/M 232.
12. ALL PARTS EXCEPT HARDWARE AND ANCHORAGE PLATES SHALL BE PAINTED BLACK (COLOR CHIP #27038).
13. RAIL POST ANCHORING NUTS SHALL BE TIGHTENED TO A SNUG FIT AND GIVEN AN ADDITIONAL ONE-EIGHTH TURN.
14. THE FABRICATOR SHALL SUBMIT FABRICATION DRAWINGS INCLUDING WELDING PROCEDURES FOR METAL HAND RAILING IN ACCORDANCE WITH SECTION 105.

PROJECT NAME: BRATTLEBORO	
PROJECT NUMBER: BF 2000(26)	
FILE NAME: z15j09lrail_bdr-31.dgn	PLOT DATE: 12/4/2015
PROJECT LEADER: J. BYATT	DRAWN BY: M. SMITH
DESIGNED BY: M. SMITH	CHECKED BY: N. CARON
BRIDGE RAIL DETAILS SHEET 2	SHEET 20 OF 26

CONSULTING ENGINEERS

CLD 15-0223 MODEL: Sheet03

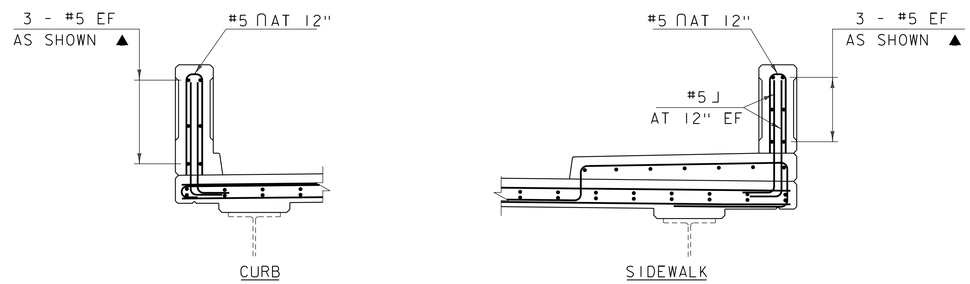

TYPICAL CONCRETE BASE PARAPET SECTIONS

SCALE: ½" = 1'-0"

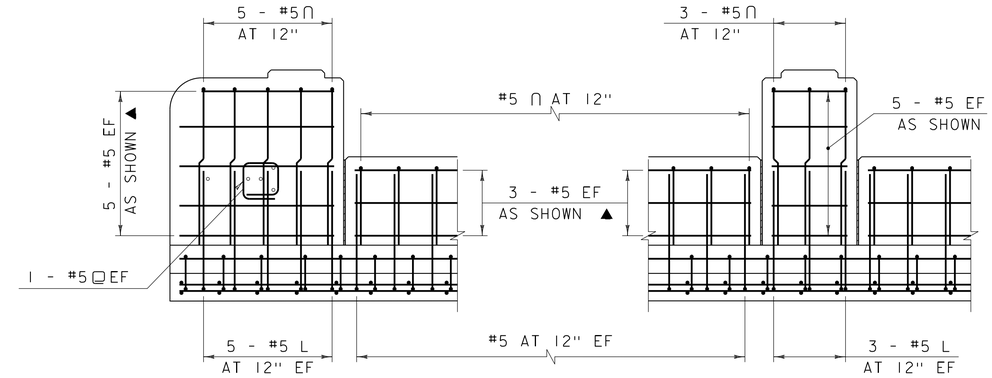

TYPICAL REINFORCING SIDEWALK SIDE

SCALE: ½" = 1'-0"

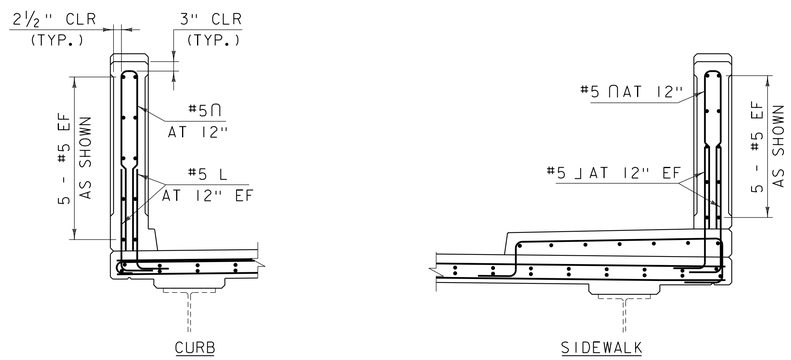

TYPICAL INTERMEDIATE PILASTER SECTIONS

SCALE: ½" = 1'-0"

(END PILASTERS ARE SIMILAR)

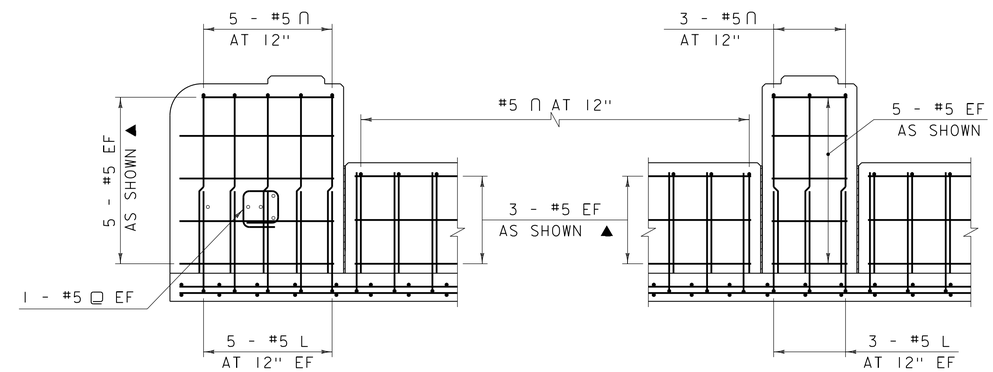

TYPICAL REINFORCING CURB SIDE

SCALE: ½" = 1'-0"

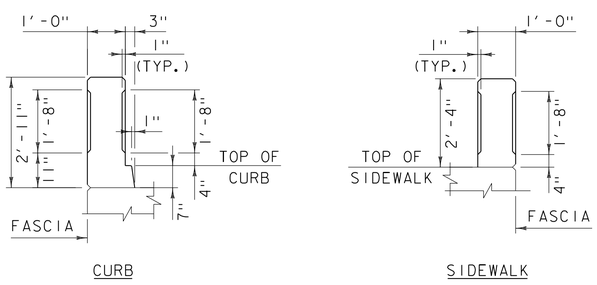

CONCRETE INSERT DETAILS

SCALE: ½" = 1'-0"

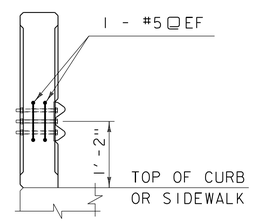

SECTION "A-A"

SCALE: ½" = 1'-0"

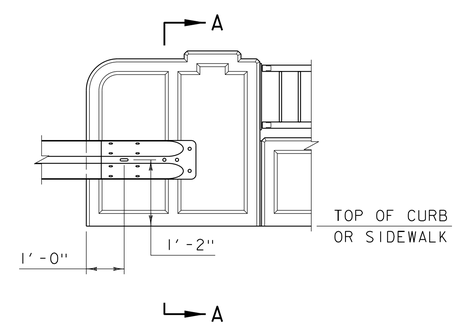

TERMINAL CONNECTOR LOCATION

SCALE: ½" = 1'-0"

NOTE:

NF = NEAR FACE
FF = FAR FACE
EF = EACH FACE
ALL REINFORCING ON THIS SHEET SHALL BE LEVEL 1 EPOXY COATED REINFORCING STEEL
▲ = CUT TO FIT IN FIELD
3" CLEAR, UNLESS OTHERWISE SPECIFIED ON THE PLANS.
2'-2" BAR LAP UNLESS OTHERWISE SPECIFIED ON THE PLANS.

CONSULTING ENGINEERS

PROJECT NAME: BRATTLEBORO	
PROJECT NUMBER: BF 2000(26)	
FILE NAME: z15j091rail_bdr-31.dgn	PLOT DATE: 12/4/2015
PROJECT LEADER: J. BYATT	DRAWN BY: M. SMITH
DESIGNED BY: M. SMITH	CHECKED BY: N. CARON
BRIDGE RAIL DETAILS SHEET 3	SHEET 21 OF 26

CLD 15-0223 MODEL: Sheet04

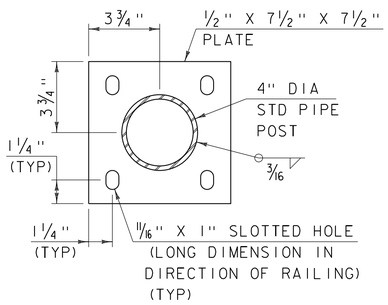

POST BASE PLATE

SCALE: 3" = 1'-0"

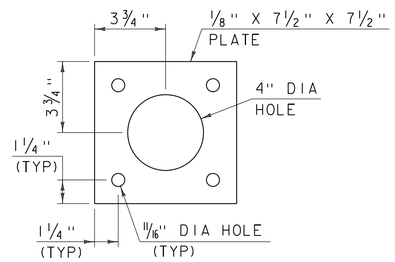

POST ANCHORAGE PLATE

SCALE: 3" = 1'-0"

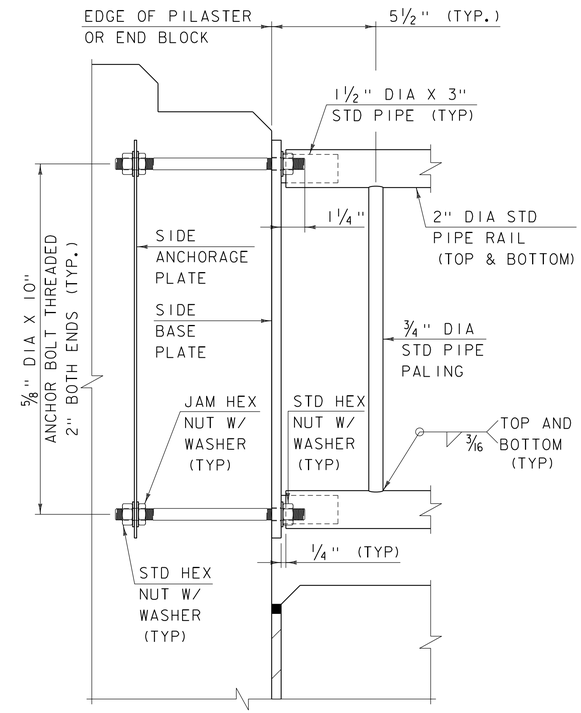

SIDE PLATE CONNECTION DETAIL

SCALE: 3" = 1'-0"

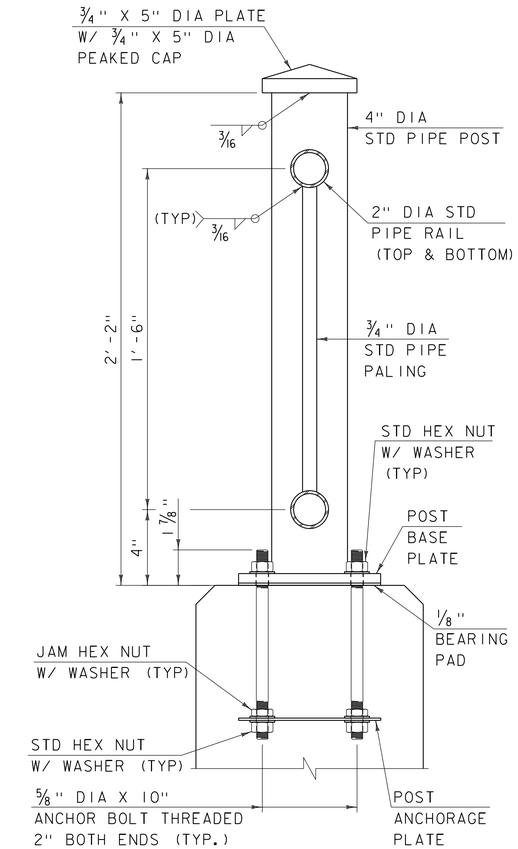

METAL RAILING DETAIL

SCALE: 3" = 1'-0"

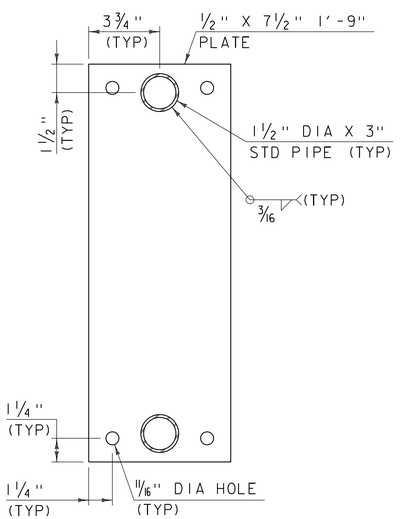

SIDE BASE PLATE

SCALE: 3" = 1'-0"

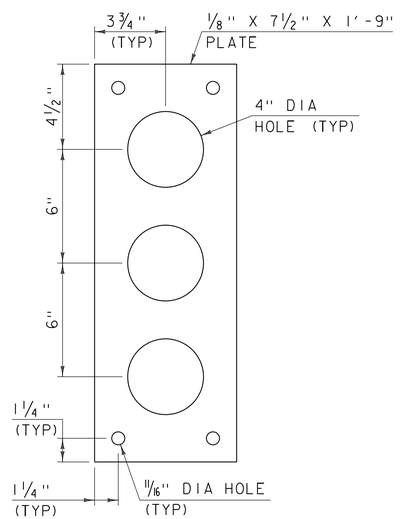

SIDE ANCHORAGE PLATE

SCALE: 3" = 1'-0"

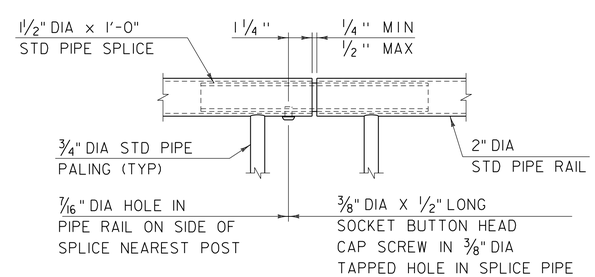

RAIL SPLICE DETAIL

SCALE: 3" = 1'-0"

PROJECT NAME: BRATTLEBORO	
PROJECT NUMBER: BF 2000(26)	
FILE NAME: z15j09rail_bdr-31.dgn	PLOT DATE: 12/4/2015
PROJECT LEADER: J. BYATT	DRAWN BY: M. SMITH
DESIGNED BY: M. SMITH	CHECKED BY: N. CARON
BRIDGE RAIL DETAILS SHEET 4	SHEET 22 OF 26

CONSULTING ENGINEERS

CLD 15-0223 MODEL: Sheet05

NOTES

1. A COMPOSITE MATERIAL POST AND/OR BLOCKOUT FROM THE APPROVED PRODUCTS LIST MAY BE SUBSTITUTED FOR A POST AND/OR BLOCKOUT OF SIMILAR DIMENSIONS.
2. REFER TO STANDARD DRAWINGS G-1 AND G-1d FOR ADDITIONAL DETAILS.
3. THE TERMINAL CONNECTOR TO BRIDGE RAIL AND THE CONNECTION PLATE SHALL BE INCLUDED IN THE BID PRICE FOR ITEM 900.640, "SPECIAL PROVISION (BRIDGE RAILING, GALVANIZED METAL HAND RAILING/CONCRETE PARAPET COMBINATION)".

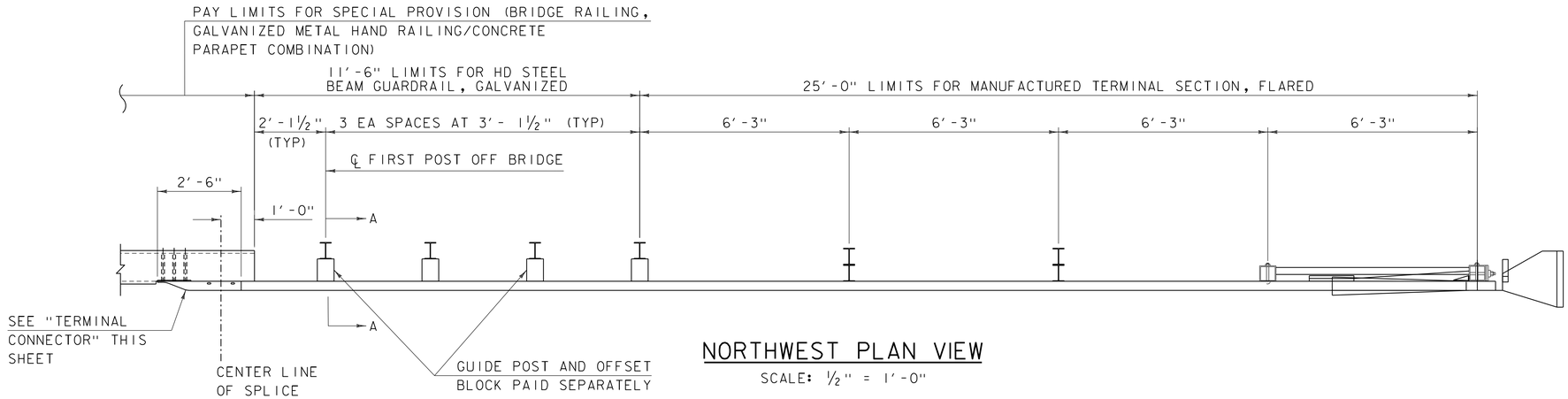

NORTHWEST PLAN VIEW

SCALE: ½" = 1'-0"

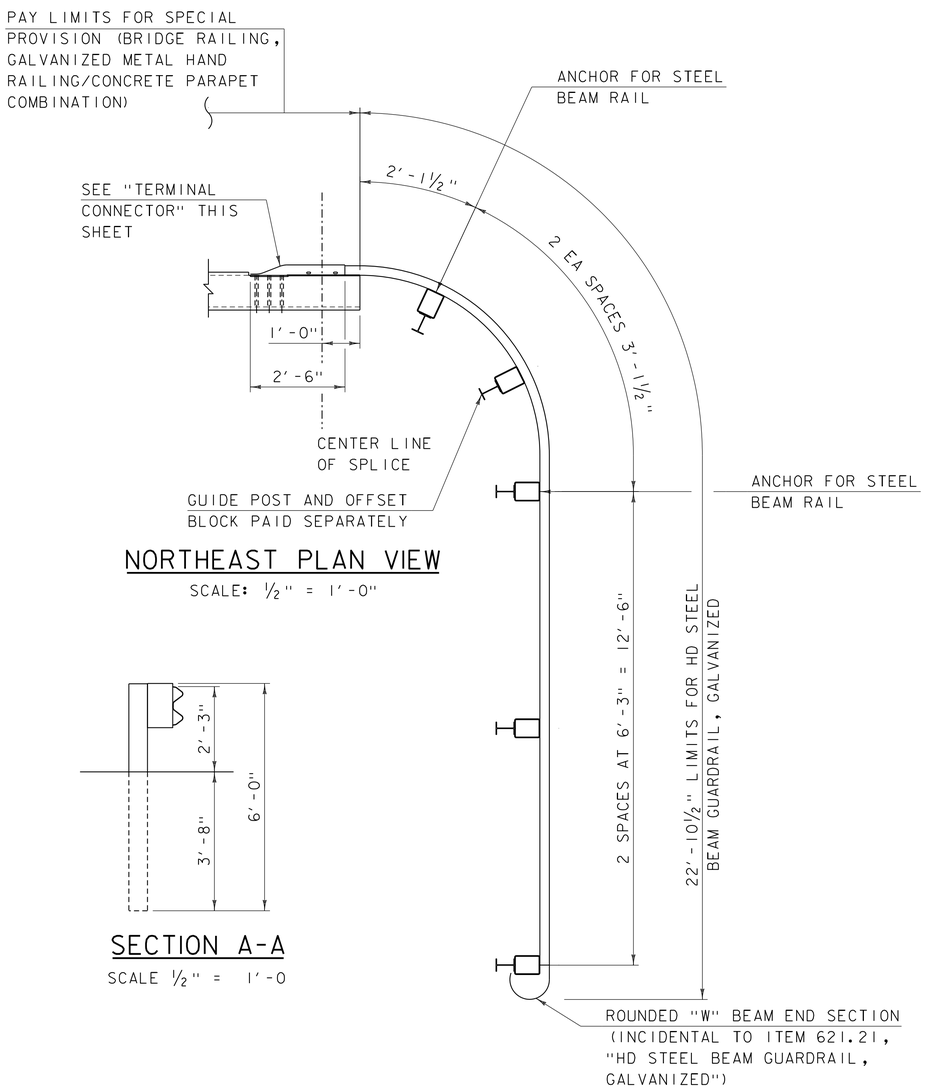

NORTHEAST PLAN VIEW

SCALE: ½" = 1'-0"

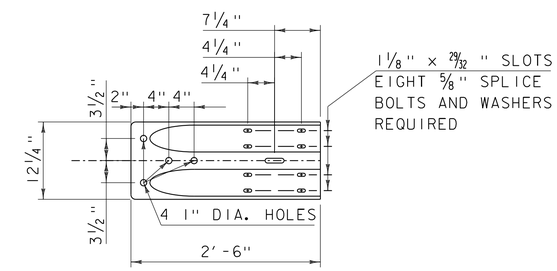

TERMINAL CONNECTOR ELEVATION

SCALE 1" = 1'-0"

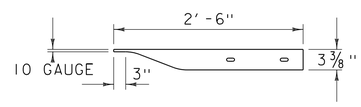

TERMINAL CONNECTOR PLAN

SCALE 1" = 1'-0"

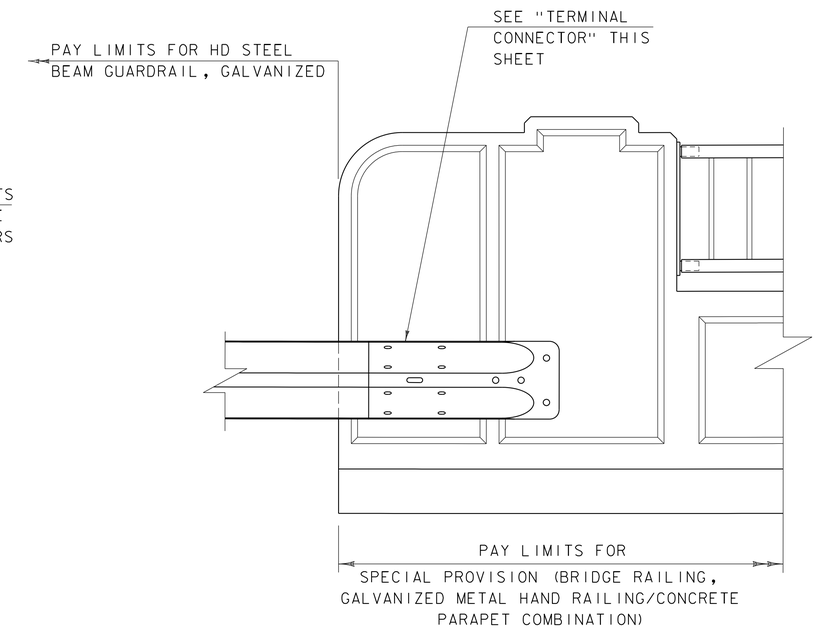

RAIL END DETAIL

NTS

SECTION A-A

SCALE ½" = 1'-0

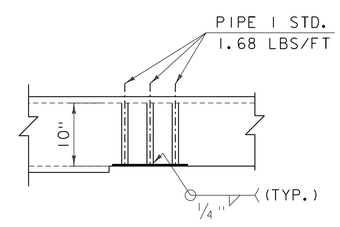

CONNECTION PLATE DETAIL -PLAN

SCALE 1" = 1'-0"

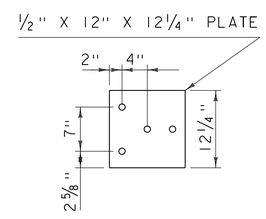

CONNECTION PLATE DETAIL- ELEVATION

SCALE 1" = 1'-0"

THE USE OF THIS RAILING IS RESTRICTED TO DESIGN SPEEDS OF 45 MPH OR LESS.

PROJECT NAME: BRATTLEBORO	
PROJECT NUMBER: BF 2000(26)	
FILE NAME: z15j09rail_bdr-31.dgn	PLOT DATE: 12/4/2015
PROJECT LEADER: J. BYATT	DRAWN BY: M. SMITH
DESIGNED BY: N. CARON	CHECKED BY: S. BEAUMONT
APPROACH RAIL DETAILS SHEET	SHEET 23 OF 26

CONSULTING ENGINEERS

CLD 15-0223 MODEL: Sheet06

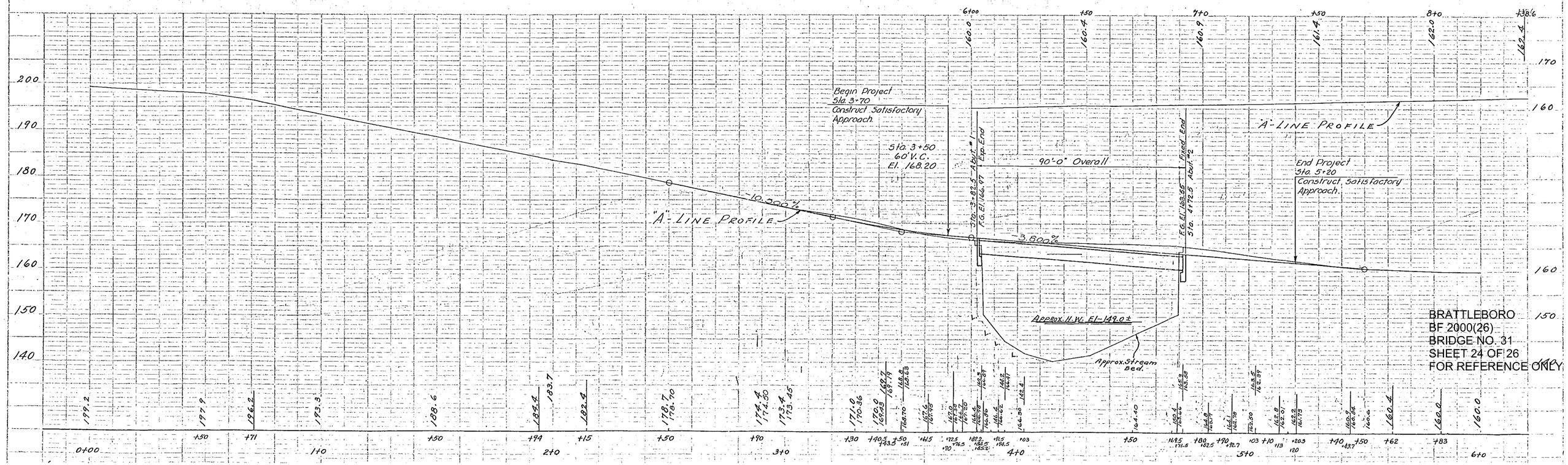
Begin Project
Sta. 3+70
Construct Satisfactory
Approach.
Sta. 3+50
60' V.C.
El. 168.20
"A" LINE PROFILE
10.000%
Sta. 3+82.5 Abut. #1
F.G. El. 166.97
Exp. End
90'-0" Overall
Fixed End
F.G. El. 169.55
Sta. 4+72.5 Abut. #2
3.800%
"A" LINE PROFILE
End Project
Sta. 5+20
Construct Satisfactory
Approach.
Approx. H.W. El. 149.0±
Approx. Stream
Bed.
BRATTLEBORO
BF 2000(26)
BRIDGE NO. 31
SHEET 24 OF 26
FOR REFERENCE ONLY

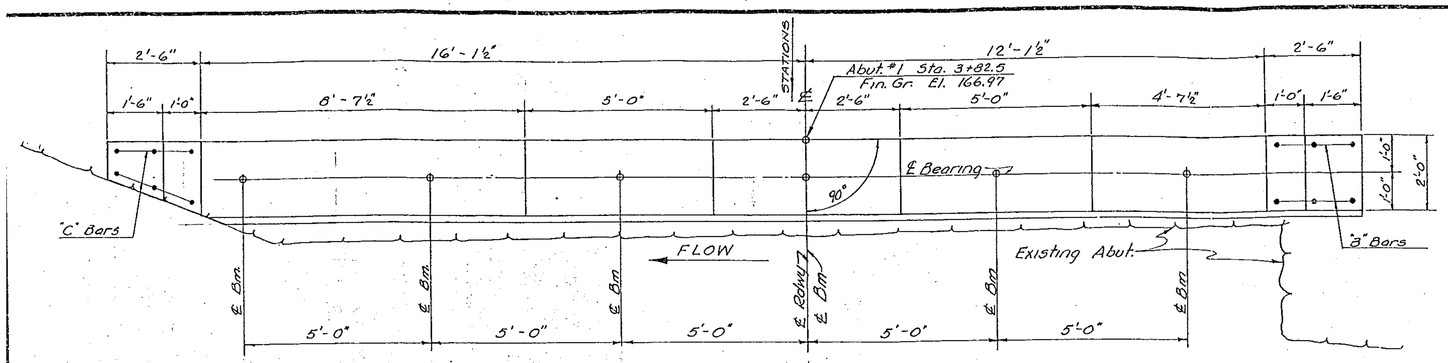

PLAN ABUT. #1

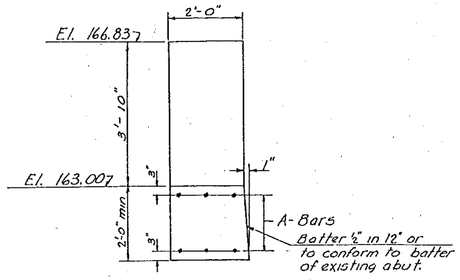

SECT. - "A-A"

REINFORCING STEEL

BAR	SIZE	NO. REQ. ABUT. 1	NO. REQ. ABUT. 2	TOT. LGTH.	DETAIL
A	⅝"φ	6		32'-9"	Straight
B	¾"φ	6	6	5'-0"	"
C	¾"φ	6	6	6'-0"	"
D	⅝"φ		6	30'-6"	"

ELEVATION ABUT. #1

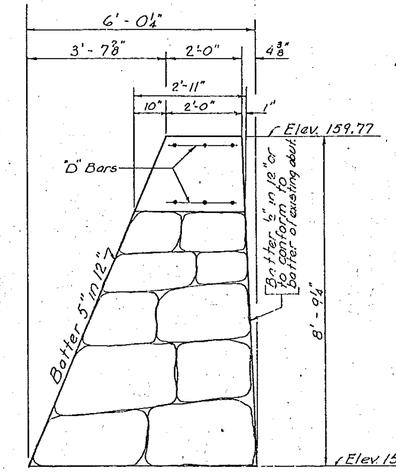

SECT. - "B-B"

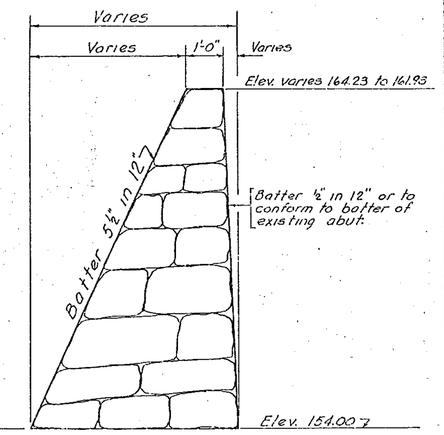

SECT. - "C-C"

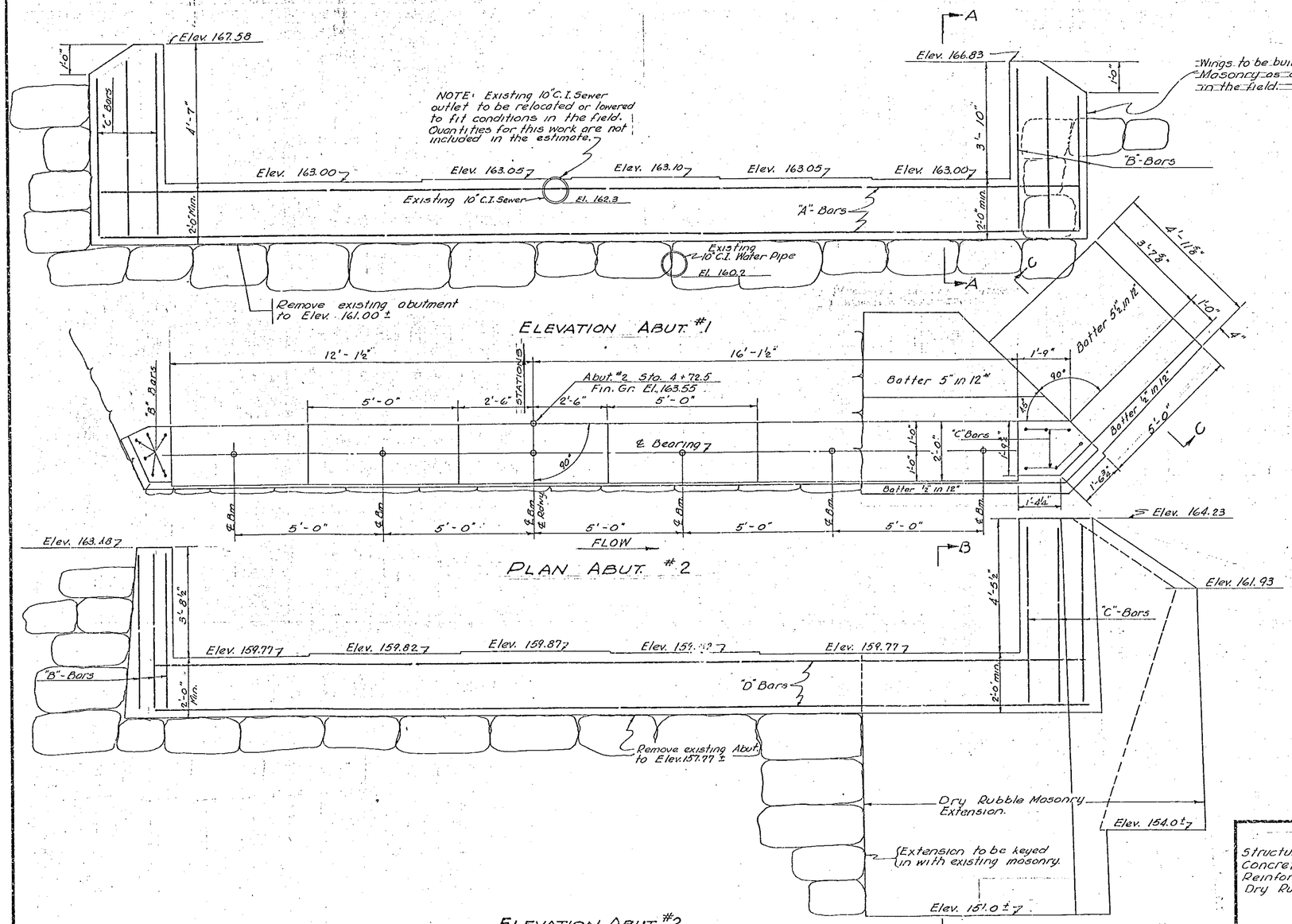

ELEVATION ABUT. #2

ABUTMENT DETAILS
ELLIOT STREET BRIDGE
BRATTLEBORO, VT.

scale: ½"=1'

BRATTLEBORO
BP 2000(26)
BRIDGE NO. 31
SHEET 25 OF 26
FOR REFERENCE ONLY

ESTIMATED QUANTITIES

ABUTMENT #1		ABUTMENT #2	
Structure Excav.	25 c.y.	Structure Excav.	60 c.y.
Concrete Class "A"	7 c.y.	Concrete, Class "A"	7 c.y.
Reinforcing Steel	303 lbs.	Reinforcing Steel	290 lbs
Dry Rubble Masonry	2 c.y.	Dry Rubble Masonry	15 c.y.

Surveyed by
Designed by E.F.P.
Drawn by E.F.P. 2/1947
Traced by H.W.S.
Checked by L.M.B. 2-25-47
Series T No. 7-1946 Filed
Sheet 4 of 11 Sheets

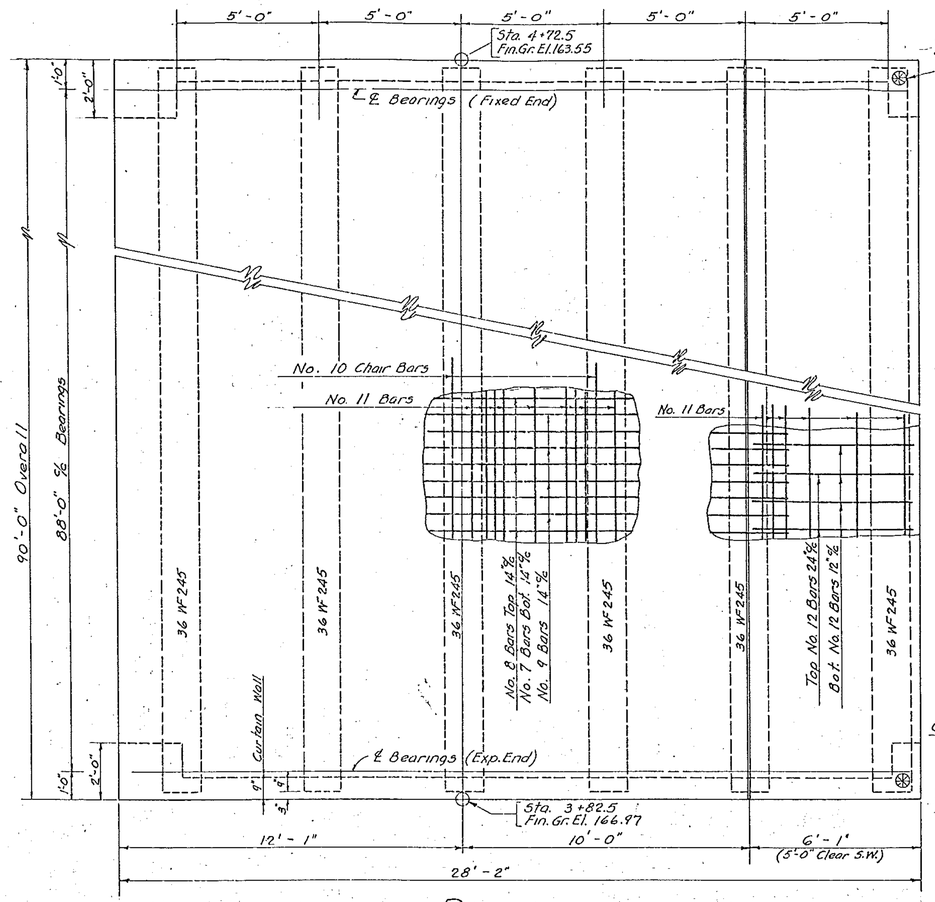

PLAN

scale: 3/8" = 1'-0"

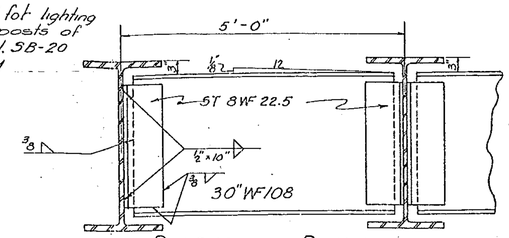

DIAPHRAGM DETAIL

4-sets req'd at ¼ points

Scale 3/4" = 1'-0"

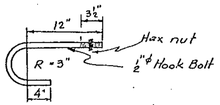

HOOK BOLT

scale: 1" = 1'-0"

24 req.

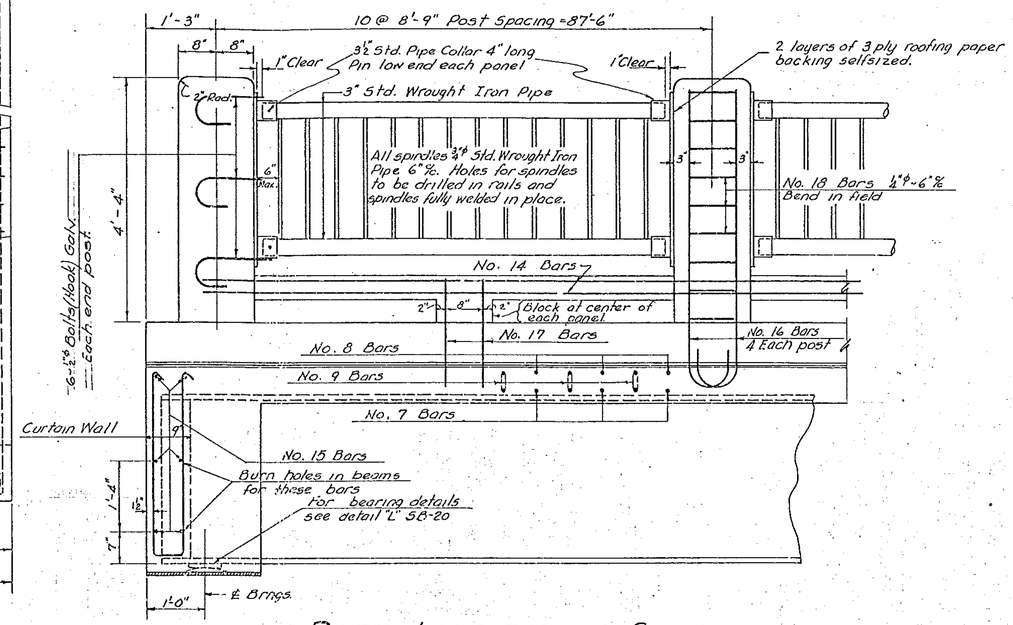

PART LONGITUDINAL SECTION

scale - 3/4" = 1'-0"

REINFORCING STEEL SCHEDULE				
BAR NO.	SIZE	TOTAL REQ'D.	OVERALL LGTH.	DETAIL
7	5/8"φ	78	23'-4"	Straight
8	5/8"φ	78	24'-8"	R=18" 23'-0" R=18" 4" 4"
9	5/8"φ	77	25'-8"	2'-9" 3'-3" 3'-3" 3'-3" 3'-3" 3'-3" 3'-3" 3'-3" 2'-9" 2'-9" 2'-9" 2'-9" 2'-9" 2'-9" 2'-9" 2'-9" R=1 1/8" 3 1/2" 3 3/8" R=1 1/8" 4" 4"
10	3/4"φ	15	31'-9"	Straight
11	1/2"φ	156	31'-3"	"
12	5/8"φ	135	7'-3"	R=3" 5'-0" R=3" 4" 4"
13	5/8"φ	34	7'-0"	3" 3" 6" 3'-0" Bar 13
13A	3/8"φ	8	8'-6"	3'-9" Bar 13-A
14	3/4"φ	24	31'-4"	Straight
15	5/8"φ	12	27'-6"	Straight
16	1"φ	88	6'-5"	5'-0" R=4" 4"
17	1/2"φ	40	4'-10"	3" 3" 8" 1'-10"
18	1/4"φ	198	3'-6"	Straight-Bend to fit in field

GENERAL NOTES:-

Beams shall be rolled to a true circular camber, the full length of the beam. Middle ordinate for camber 3 1/4".

All Structural Steel shall be painted as specified under item 43-B of Pamphlet "E", Standard Road & Bridge Specifications, State of Vermont, 1936. Final coat shall be green.

All material & construction shall conform to the Standard Road & Bridge Specifications, State of Vermont, 1936 & A.A.S.H.O. Specifications of 1944.

Designed for H-15(44) live loading & 25# paving allowance.

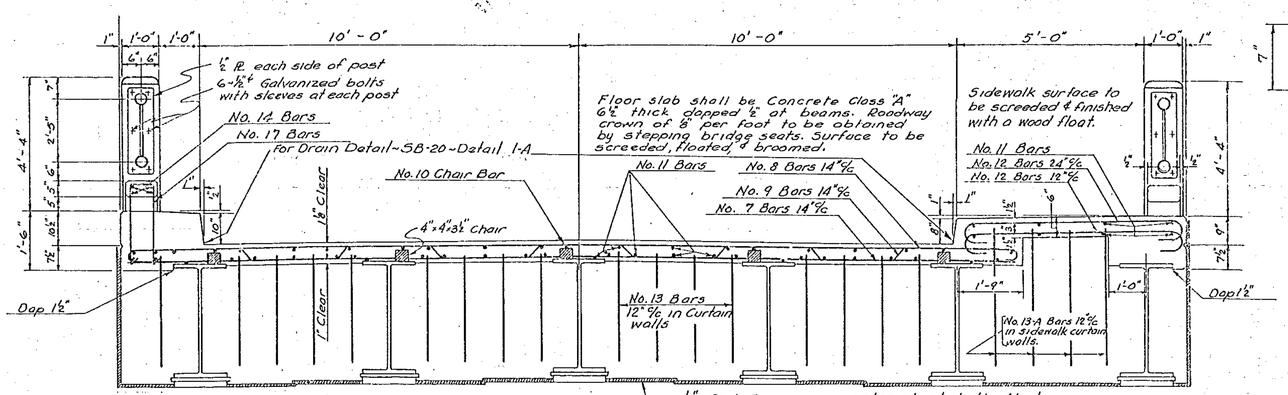

CROSS SECTION OF BRIDGE

scale: 1/2" = 1'-0"

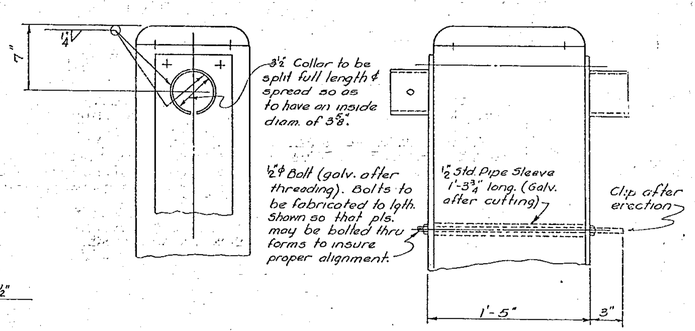

DETAIL OF TOP OF POSTS

scale: 1 1/2" = 1'-0"

SUPERSTRUCTURE DETAILS

ELLIOT STREET BRIDGE

BRATTLEBORO, VT.

scales as noted

BRATTLEBORO
BF 2000(26)
BRIDGE NO. 31
SHEET 26 OF 26
FOR REFERENCE ONLY

ESTIMATED QUANTITIES

Conc. Class "A"	79 c.y.
Reinforcing Steel	14,300 lbs.
Steel Superstructure	150,500 lbs.
Conduit for Lighting System	1 L.S.

Surveyed by	
Designed by	E.F.P.
Drawn by	E.F.P.
Traced by	H.W.S.
Checked by	L.M.B. 2-19-47
Series T-7 No. 1946	Filed
Sheet 3 of 11 Sheets	

CONCRETE GENERAL NOTES

1. ALL EXPOSED EDGES OF CONCRETE SHALL BE CHAMFERED 1" x 1"
2. REINFORCING STEEL SIZE AND SPACING SHOWN IN THE PLANS IS BASED ON 60 KSI STEEL, UNLESS NOTED OTHERWISE. WITH THE ENGINEER'S PERMISSION, BAR SIZE AND SPACING MAY BE MODIFIED ACCORDING TO THE LATEST AASHTO LRFD BRIDGE DESIGN SPECIFICATION AND STRUCTURES DESIGN MANUAL WHEN USING HIGHER STRENGTH STEEL.

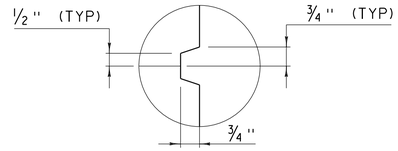

SCORE MARK DETAIL
(NOT TO SCALE)

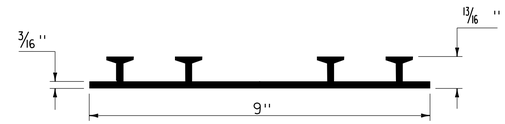

P.V.C. WATERSTOP FOR CONSTRUCTION JOINTS
(NOT TO SCALE)

PAYMENT FOR THE P.V.C. WATERSTOP SHALL BE INCIDENTAL TO THE UNIT BID PRICE FOR THE ADJACENT CONCRETE.

OTHER CONFIGURATIONS OF WATERSTOP MAY BE USED UPON APPROVAL OF THE ENGINEER.

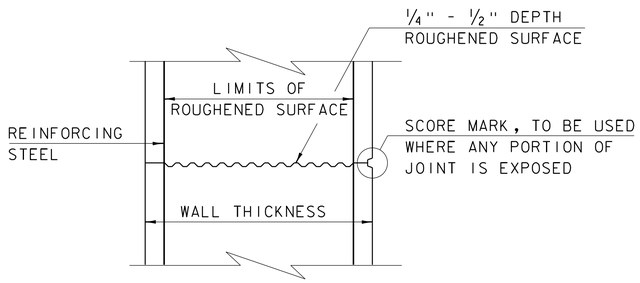

TYPICAL HORIZONTAL CONSTRUCTION JOINT
(NOT TO SCALE)

1. THE SURFACE OF THE CONCRETE CONSTRUCTION JOINTS SHALL BE CLEANED AND FREE OF LAITANCE.
2. IMMEDIATELY BEFORE NEW CONCRETE IS PLACED, ALL CONSTRUCTION JOINTS SHALL BE WETTED AND STANDING WATER REMOVED.

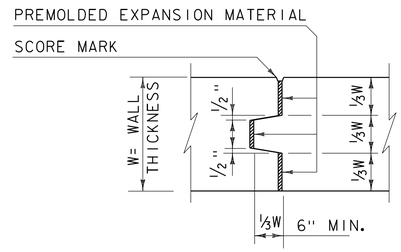

TYPICAL CONCRETE EXPANSION JOINT
(NOT TO SCALE)

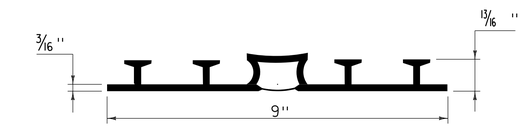

P.V.C. WATERSTOP FOR EXPANSION JOINTS
(NOT TO SCALE)

PAYMENT FOR THE P.V.C. WATERSTOP SHALL BE INCIDENTAL TO THE UNIT BID PRICE FOR THE ADJACENT CONCRETE.

OTHER CONFIGURATIONS OF WATERSTOP MAY BE USED UPON APPROVAL OF THE ENGINEER.

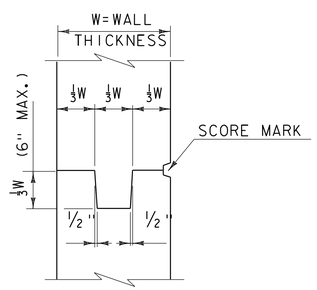

TYPICAL CONCRETE CONSTRUCTION JOINT
(NOT TO SCALE)

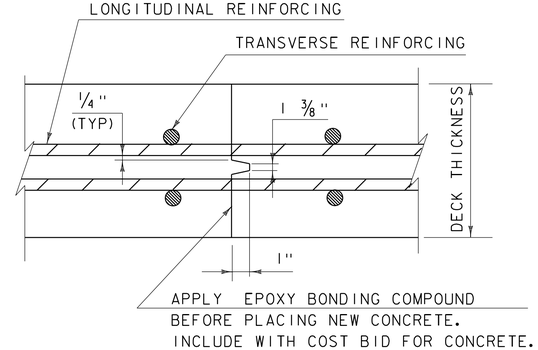

TRANSVERSE BRIDGE SLAB CONSTRUCTION JOINT DETAILS
(NOT TO SCALE)

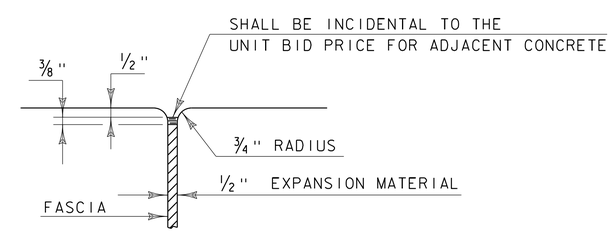

JOINT BETWEEN FASCIA AND WINGWALL
(NOT TO SCALE)

REVISIONS	
MAY 7, 2010	APPROVED FOR USE BY VAOT STRUCTURES SECTION
FEBRUARY 9, 2012	REBAR SUBSTITUTION ALLOWANCE ADDED TO CONCRETE GENERAL NOTES.

CONCRETE DETAILS AND NOTES

VERMONT AGENCY OF TRANSPORTATION
STRUCTURES SECTION

STRUCTURES DETAIL
SD-501.00

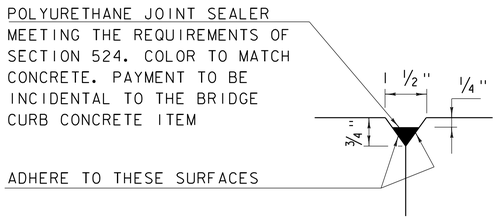

DETAIL "B"
(NOT TO SCALE)

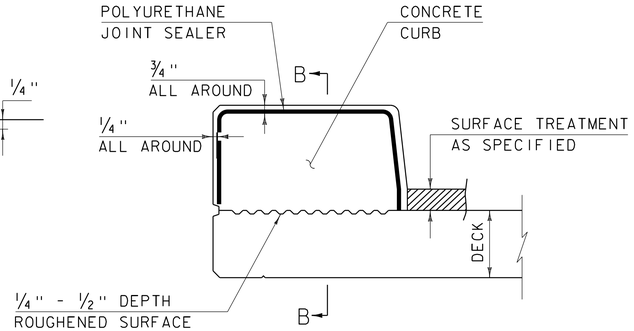

CONCRETE CURB JOINT SECTION
(NOT TO SCALE)

1. SEE TYPICAL HORIZONTAL CONSTRUCTION JOINT DETAIL FOR ADDITIONAL INFORMATION

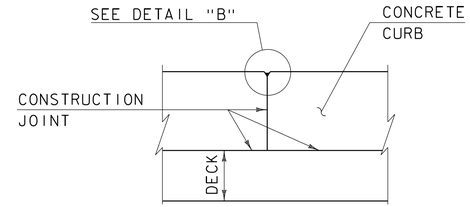

SECTION B - B
(NOT TO SCALE)

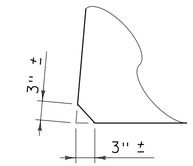

ACUTE ANGLE CLIP DETAIL
(NOT TO SCALE)

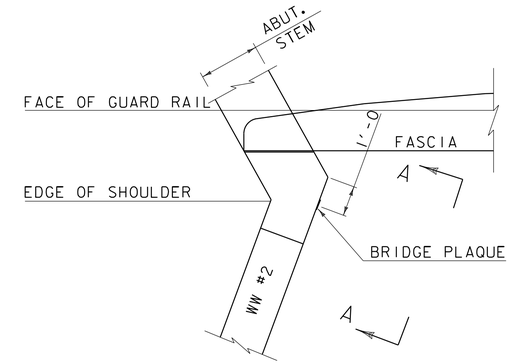

PLAN

CONCRETE CURB JOINT NOTES

1. CONCRETE CURBS MAY BE PLACED IN ONE CONTINUOUS OPERATION IF AN APPROVED SHRINKAGE REDUCING ADMIXTURE LISTED IN THE SPECIAL PROVISIONS IS USED WITH THE CONCRETE MIX DESIGN. PAYMENT FOR THE SHRINKAGE REDUCING ADMIXTURE WILL BE INCIDENTAL TO THE BRIDGE CURB CONCRETE ITEM.

2. IF THE CONTRACTOR CHOOSES NOT TO USE AN APPROVED SHRINKAGE REDUCING ADMIXTURE, THE CURBS SHALL BE CONSTRUCTED WITH CONSTRUCTION JOINTS SPACED AT A MAXIMUM OF 15'-0" CENTER TO CENTER AND 2'-0" MINIMUM FROM THE CENTER OF NEAREST BRIDGE RAILING POST.

3. ON MULTI-SPAN CONTINUOUS SUPERSTRUCTURES, REGARDLESS OF WHETHER APPROVED SHRINKAGE REDUCING ADMIXTURE IS USED, CURB JOINTS SHALL BE LOCATED OVER THE CENTERLINE OF PIERS AND 7'-0" EACH SIDE OF THE CENTERLINE OF EACH PIER.

4. WHEN CURB JOINTS ARE USED THE CURBS SHALL BE PLACED IN ALTERNATE SECTIONS WITH A MINIMUM OF 48 HOUR DELAY BETWEEN ADJACENT PLACEMENTS.

5. LONGITUDINAL REINFORCING SHALL BE CONTINUOUS THROUGH CURB CONSTRUCTION JOINTS. CURB STIRRUP BARS SHALL BE TURNED AS NECESSARY TO MAINTAIN COVER IN THE FLARED CURB ENDS.

6. THE JOINT SPACING AND DETAILS SHOWN SHALL APPLY TO SIDEWALKS WHEN SHOWN IN THE PLANS.

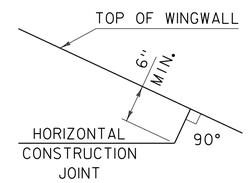

HORIZONTAL WINGWALL CONSTRUCTION JOINT
(NOT TO SCALE)

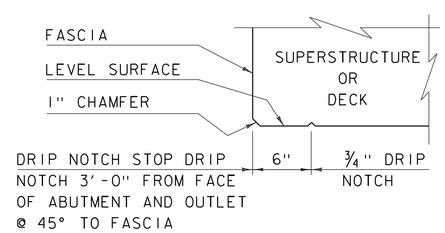

DRIP NOTCH DETAIL
(NOT TO SCALE)

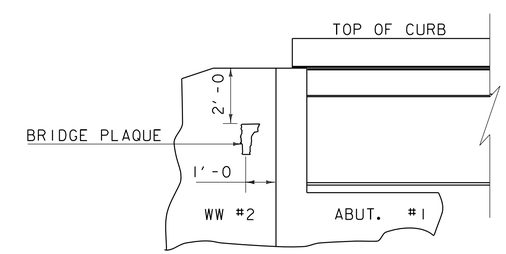

VIEW "A - A"

BRIDGE PLAQUE
(NOT TO SCALE)

THE BRIDGE PLAQUE WILL BE SUPPLIED BY THE AGENCY OF TRANSPORTATION AND SHALL BE INSTALLED BY THE CONTRACTOR AT ABUTMENT #1 ON THE RIGHT SIDE AS SHOWN OR AS DIRECTED BY THE ENGINEER.

PAYMENT FOR INSTALLATION OF THE BRIDGE PLAQUE SHALL BE INCIDENTAL TO THE ADJACENT CONCRETE.

REVISIONS

MAY 7, 2010	APPROVED FOR USE BY VAOT STRUCTURES SECTION
JUNE 4, 2010	MODIFIED AND ADDED TWO DETAILS
OCTOBER 10, 2012	MODIFIED HORZ. JOINT WINGWALL ADD 6" MIN. DIMENSION

CONCRETE DETAILS AND NOTES

VERMONT AGENCY OF TRANSPORTATION
STRUCTURES - SECTION

STRUCTURES DETAIL
SD-502.00

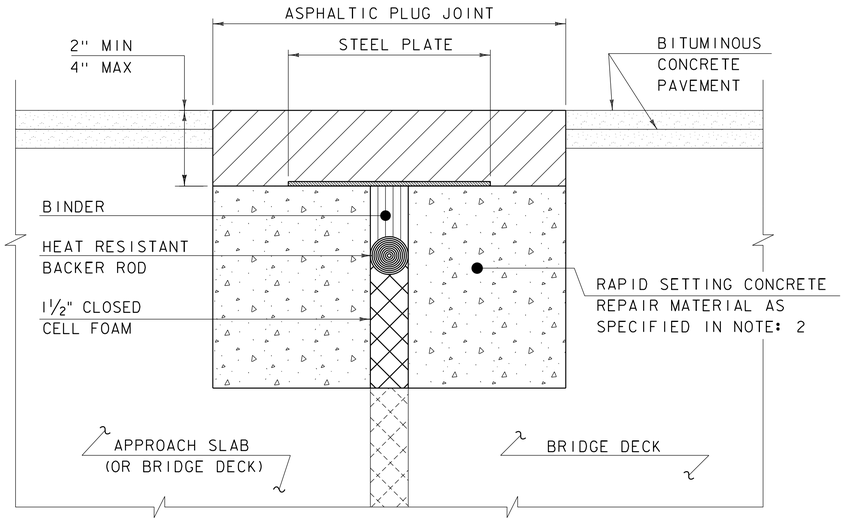

ASPHALTIC PLUG JOINT DETAIL - REHAB

NOTES:

1. THE CONTRACTOR SHALL REMOVE ALL ASPHALTIC PLUG JOINT MATERIAL AND DETERIORATED CONCRETE AS DIRECTED BY THE ENGINEER. REMOVAL OF THE FIRST 4 INCHES OF MATERIAL SHALL BE INCLUDED IN THE BID PRICE FOR ITEM 516.10 BRIDGE EXPANSION JOINT, ASPHALTIC PLUG. ANY REMOVAL OF MATERIAL GREATER THAN 4 INCHES SHALL BE INCLUDED IN THE BID PRICE OF ITEM 580.20 RAPID SETTING CONCRETE REPAIR MATERIAL WITH COARSE AGGREGATE.

2. THE CONTRACTOR SHALL REPLACE REMOVED MATERIAL THAT IS LESS THAN 4" FROM FINISHED GRADE WITH ASPHALTIC PLUG JOINT MATERIAL MEETING THE REQUIREMENTS OF SUBSECTION 707.15. ALL REMOVED MATERIAL THAT IS GREATER THAN 4 INCHES FROM FINISHED GRADE SHALL BE REPLACED WITH RAPID SETTING CONCRETE REPAIR MATERIAL WITH COARSE AGGREGATE MEETING THE REQUIREMENTS OF SUBSECTION 780.04.

3. REINFORCING STEEL NOT SHOWN FOR CLARITY.

4. PLACE 1/4" THICK BY 8" WIDE SECTIONS OF STEEL PLATE OVER THE CENTER OF THE MOVEMENT GAP. SECURE THE PLATES FROM MOVING BY INSERTING LOCATING PINS THROUGH THE PRE-STAMPED HOLES INTO BACKER ROD AND COVER WITH HOT BINDER. THE STEEL PLATES MAY BE OMITTED WHERE THE ENGINEER DETERMINES THAT THE APPROACH SLAB OR BRIDGE DECK WILL PROVIDE INADEQUATE SUPPORT AND WHERE VERTICAL MOVEMENT OF THE PLATES MIGHT OCCUR.

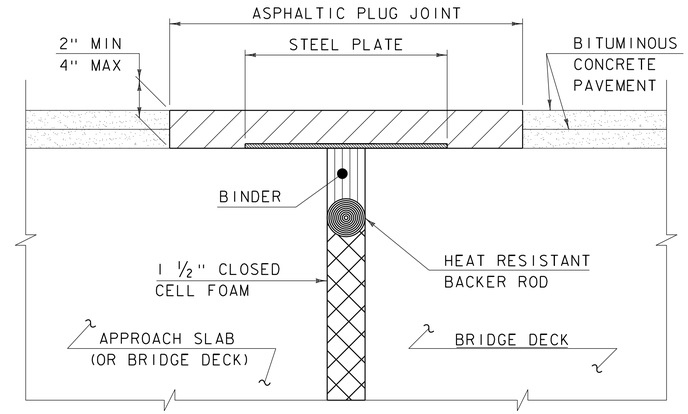

ASPHALTIC PLUG JOINT DETAIL "A" - NEW

NOTE:
PLACE 1/4" THICK BY 8" WIDE SECTIONS OF STEEL PLATE OVER THE CENTER OF THE MOVEMENT GAP. SECURE THE PLATES FROM MOVING BY INSERTING LOCATING PINS THROUGH THE PRE-STAMPED HOLES INTO BACKER ROD AND COVER WITH HOT BINDER.

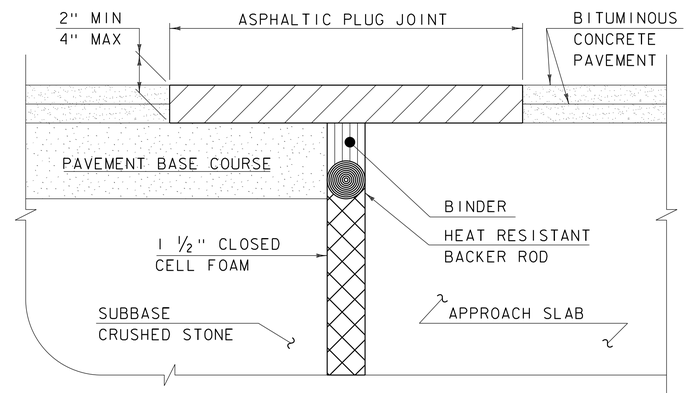

ASPHALTIC PLUG JOINT DETAIL "B" - NEW

ASPHALTIC PLUG JOINT NOTES

INSTALLATION:

1. LOCATE THE JOINT CENTRALLY OVER THE DECK OVERLAY EXPANSION GAP OR FIXED JOINT, MARKED OUT TO THE MANUFACTURER'S RECOMMENDED WIDTH.

2. REMOVE THE BITUMINOUS CONCRETE PAVEMENT FULL DEPTH AS SHOWN ON THE PLANS. THE PAVEMENT SHALL BE DRY AND SAW CUT TO THE LIMITS REQUIRED TO PLACE THE JOINT. A PNEUMATIC HAMMER AND CHISEL MAY BE USED ADJACENT TO THE CURB ONLY WHEN SAW CUTTING IS NOT POSSIBLE.

3. BLAST CLEAN THE JOINT AREA OF DEBRIS, ASPHALT AND SHEET MEMBRANE. THOROUGHLY DRY THE JOINT AREA WITH COMPRESSED AIR PRIOR TO APPLYING BINDER MATERIAL.

4. PLACE PROPERLY SIZED HEAT RESISTANT BACKER ROD IN THE MOVEMENT GAP ALLOWING FOR 1" +/- OF BINDER ABOVE THE ROD.

5. HEAT AND PLACE THE BINDER MATERIAL AS RECOMMENDED BY THE MANUFACTURER.

6. IMMEDIATELY AFTER TOP COATING, CAST AN ANTI-SKID MATERIAL OVER THE JOINT TO REDUCE THE RISK OF TRACKING.

WEATHER LIMITATIONS

APPLY BINDER MATERIAL ONLY WHEN THE FOLLOWING CONDITIONS PREVAIL OR AS RECOMMENDED BY THE MANUFACTURER:

1. THE AMBIENT AIR TEMPERATURE IS AT LEAST 10 DEG C (50 DEG F) AND RISING.

2. THE ROAD SURFACE IS DRY.

3. WEATHER CONDITIONS OR OTHER CONDITIONS ARE FAVORABLE AND ARE EXPECTED TO REMAIN SO FOR THE PERFORMANCE OF SATISFACTORY WORK.

DETAILS ON THIS SHEET ARE NOT TO SCALE.

REVISIONS	
MAY 7, 2010	APPROVED FOR USE BY VAOT STRUCTURES SECTION
AUGUST 29, 2011	ADD DETAIL "B" AND REV. NOTES

BRIDGE JOINT
ASPHALTIC PLUG

VERMONT AGENCY OF TRANSPORTATION
STRUCTURES - DIVISION

STRUCTURES DETAIL

SD-516.10

STRUCTURAL STEEL GENERAL NOTES:

1. ALL FIELD CONNECTIONS SHALL BE MADE WITH 7/8" DIAMETER HIGH-STRENGTH BOLTS IN 15/16" DIAMETER HOLES, PER SUBSECTION 506.19, UNLESS OTHERWISE SPECIFIED.
2. ALL HOLES IN THE WEBS OF THE FASCIA GIRDERS THAT ARE NOT OTHERWISE FILLED, SHALL BE FILLED WITH EITHER BUTTON HEAD OR HEX HEAD BOLTS. THESE BOLTS SHALL BE TIGHTENED IN ACCORDANCE WITH SUBSECTION 506.19.
3. ALL WELDING SHALL CONFORM TO THE PROVISIONS OF SUBSECTION 506.10.
4. ANY CONNECTIONS THAT ARE NOT DETAILED ON THE PLANS SHALL BE DETAILED BY THE FABRICATOR AND SUBMITTED TO THE STRUCTURES ENGINEER FOR APPROVAL.
5. STRUCTURAL STEEL MEMBERS DESIGNATED "CVN" IN THE PLANS SHALL BE CHARPY V-NOTCH TESTED IN ACCORDANCE WITH SUBSECTION 714.01 OF THE STANDARD SPECIFICATIONS.
6. ENDS OF GIRDERS ARE TO BE VERTICAL IN THEIR FINAL POSITION.
7. AFTER SUPERSTRUCTURE STEEL HAS BEEN ERECTED, ELEVATIONS ALONG THE TOP OF THE GIRDERS SHALL BE TAKEN AS DIRECTED BY THE RESIDENT ENGINEER FOR USE IN DETERMINING FINISHED GRADES.

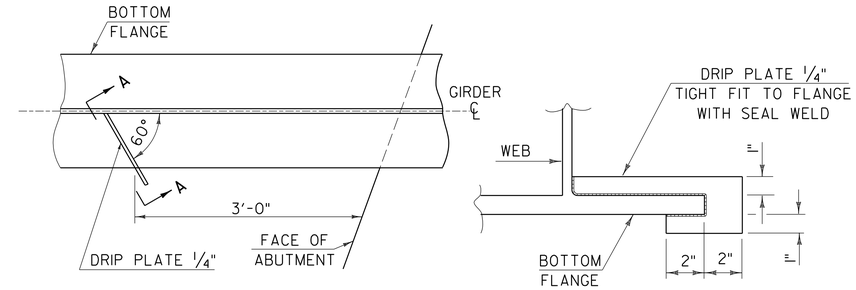

PLAN DRIP PLATE

SECTION A - A

NOTE: DRIP PLATES SHALL BE PLACED ON OUTSIDE EDGE OF FASCIA GIRDERS ON THE HIGH SIDE OF ALL PIERS AND ABUTMENTS OR AS INDICATED ON PROJECT PLANS.

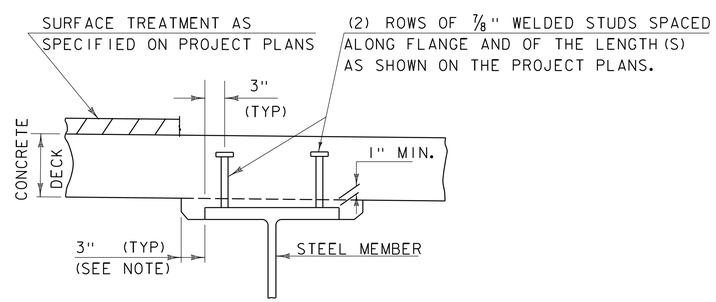

NOTE:
THE 3" HORIZONTAL SECTION MAY BE ELIMINATED FOR FORMING SYSTEMS DESIGNED FOR THE CONSTRUCTION OF VERTICAL HAUNCHES. ANY VOIDS RESULTING FROM FORMING SYSTEM ELEMENTS SHALL BE FILLED WITH JOINT SEALER, POLYURETHANE MEETING THE REQUIREMENTS OF SECTION 524. THE COST OF THE JOINT SEALER, POLYURETHANE SHALL BE INCIDENTAL TO THE ADJACENT CONCRETE.

HAUNCH AND SHEAR CONNECTOR DETAIL

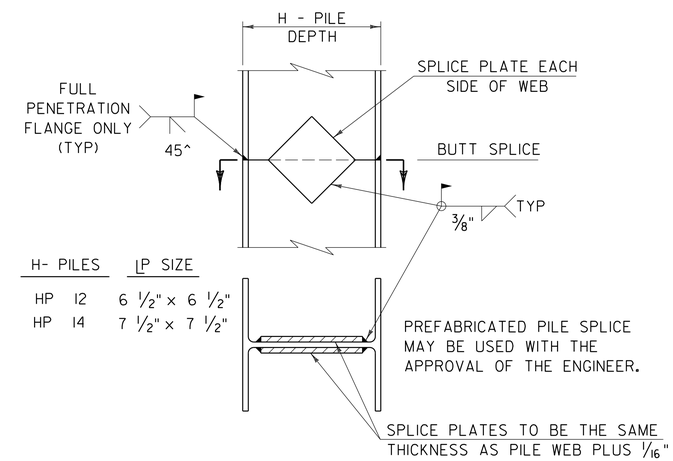

DETAIL OF PILE SPLICE

DETAILS ON THIS SHEET ARE "NOT TO SCALE" UNLESS NOTED OTHERWISE.

REVISIONS	
MAY 7, 2010	APPROVED FOR USE BY VAOT STRUCTURES SECTION
JUNE 4, 2010	MODIFIED NOTES

STRUCTURAL STEEL DETAILS & NOTES

VERMONT AGENCY OF TRANSPORTATION
STRUCTURES - SECTION

STRUCTURES DETAIL

SD-601.00