STATE OF VERMONT
AGENCY OF TRANSPORTATION

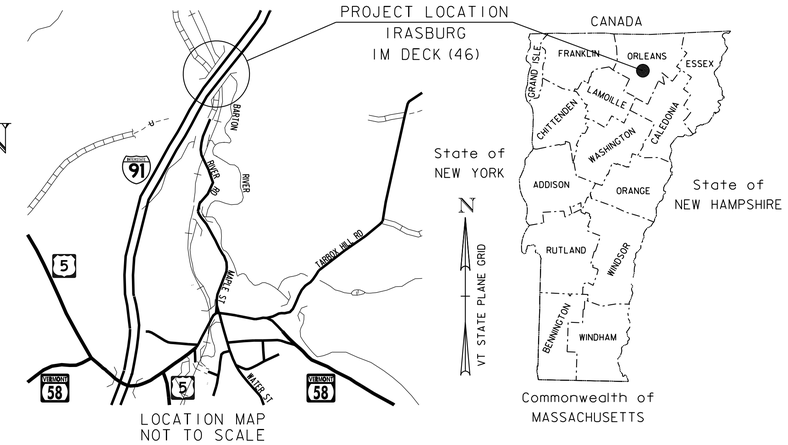

LOCATION MAP
NOT TO SCALE

PROPOSED IMPROVEMENT
BRIDGE PROJECT
TOWN OF IRASBURG
COUNTY OF ORLEANS
INTERSTATE 91 (PRINCIPAL ARTERIAL) BRIDGE NO. 107N

PROJECT LOCATION: LOCATED IN THE TOWN OF IRASBURG, ON INTERSTATE 91, APPROXIMATELY 0.430 MILES SOUTHERLY OF THE IRASBURG/BROWNINGTON TOWN LINE.

PROJECT DESCRIPTION: WORK TO BE PERFORMED UNDER THIS PROJECT INCLUDES THE REPLACEMENT OF THREE OF THE FOUR SPANS OF THE EXISTING BRIDGE DECK INCLUDING RELATED APPROACH WORK.

LENGTH OF STRUCTURE: 447.43 FEET
LENGTH OF ROADWAY: 152.57 FEET
LENGTH OF PROJECT: 600.00 FEET

IRASBURG
IM DECK (46)
FINAL PLANS

DECEMBER 4, 2015

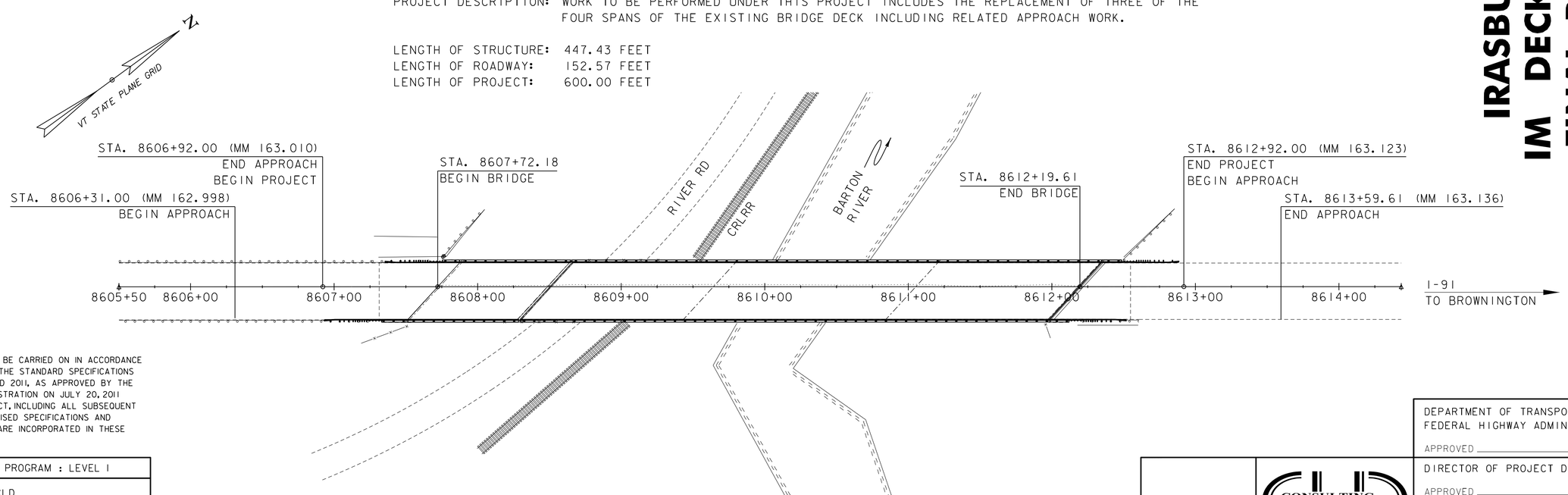

CONSTRUCTION IS TO BE CARRIED ON IN ACCORDANCE WITH THESE PLANS AND THE STANDARD SPECIFICATIONS FOR CONSTRUCTION DATED 2011, AS APPROVED BY THE FEDERAL HIGHWAY ADMINISTRATION ON JULY 20, 2011 FOR USE ON THIS PROJECT, INCLUDING ALL SUBSEQUENT REVISIONS AND SUCH REVISED SPECIFICATIONS AND SPECIAL PROVISIONS AS ARE INCORPORATED IN THESE PLANS.

SCALE 1" = 40'-0"
40 0 40

QUALITY ASSURANCE PROGRAM : LEVEL I

SURVEYED BY : CLD
SURVEYED DATE : 09/21/2015

DATUM
VERTICAL NAVD 88
HORIZONTAL NAD 83

DEPARTMENT OF TRANSPORTATION
FEDERAL HIGHWAY ADMINISTRATOR
APPROVED _____ DATE _____

DIRECTOR OF PROJECT DELIVERY
APPROVED _____ DATE _____

PROJECT MANAGER : JENNIFER FITCH, P.E.

CONSULTING ENGINEERS
540 Commercial Street
Manchester, NH 03101
(603) 668-8223
www.cldengineers.com

PROJECT NAME : IRASBURG
PROJECT NUMBER : IM DECK (46)

SHEET 1 OF 45 SHEETS

INDEX OF SHEETS

1. TITLE SHEET
2.-3. INDEX OF SHEETS AND GENERAL NOTES SHEETS 1-2
4. TYPICAL BRIDGE SECTIONS SHEET
5. TYPICAL ROADWAY SECTIONS SHEET
6.-7. QUANTITY SHEETS 1-2
8. CONVENTIONAL SYMBOLOGY LEGEND SHEET
9. LAYOUT SHEET
10. PROFILE SHEET
11.-13. TRAFFIC CONTROL SHEETS 1-3
14. TRAFFIC CONTROL BARRIER SHEET
15.-16. PHASING SECTIONS SHEETS 1-2
17. DECK DETAILS SHEET
18.-19. JOINT DETAILS SHEETS 1-2
20. CURB REPLACEMENT DETAILS SHEET
21. BITUMINOUS CONCRETE REMOVAL PLAN SHEET
22. RAIL LAYOUT SHEET
23.-45. REFERENCE PLAN SHEETS 1-23

STRUCTURE DETAIL SHEETS

SD-516.10	08/29/2011	BRIDGE JOINT ASPHALTIC PLUG
SD-501.00	02/09/2012	CONCRETE DETAILS AND NOTES
SD-502.00	10/10/2012	CONCRETE DETAILS AND NOTES
SD-601.00	06/04/2010	STRUCTURAL STEEL DETAILS & NOTES

VAOT STANDARD SHEETS

E-193	08/18/1995	PAVEMENT MARKING DETAILS
G-1	11/10/2015	STEEL BEAM GUARDRAIL WITH STEEL POSTS, STEEL BEAM GUARDRAIL WITH WOOD POSTS
G-1d	02/10/2014	STEEL BEAM GUARDRAIL APPROACH END TERMINAL, STEEL BEAM GUARDRAIL TRAILING END TERMINAL
T-1	08/06/2012	TRAFFIC CONTROL GENERAL NOTES
T-11	08/06/2012	CONSTRUCTION APPROACH SIGNING DIVIDED HIGHWAY ONE LANE CLOSED
T-12	08/06/2012	TRAFFIC CONTROL DIVIDED HIGHWAY ONE LANE CLOSED
T-13	08/06/2012	TRAFFIC CONTROL DIVIDED HIGHWAY ONE LANE CLOSED
T-22	08/06/2012	TRAFFIC CONTROL FOR PAVEMENT MARKING ON DIVIDED HIGHWAY
T-31	08/06/2012	CONSTRUCTION SIGN DETAILS
T-42	04/09/2014	BRIDGE NUMBER PLAQUE
T-44	04/09/2014	MILEMARKER DETAILS STATE AND TOWN HIGHWAYS
T-55	10/26/2015	SIGN PLACEMENT EXPRESSWAY & FREEWAY
S-360A	04/23/2012	BRIDGE RAILING, GALVANIZED 2 RAIL BOX BEAM
S-360B	04/23/2012	GUARDRAIL APPROACH SECTION, GALVANIZED 2 RAIL BOX BEAM
S-391	01/16/2014	SNOW BARRIER

LRFR LOAD RATING FACTORS

LOADING LEVELS	TRUCK						
	H-20	HL-93	3S2	6 AXLE	3A. STR.	4A. STR.	5A. SEMI
TONNAGE	20	36	36	66	30	34.5	38
INVENTORY	1.29	0.86					
POSTING							
OPERATING	1.67	1.11	2.48	1.46	2.32	2.15	2.21
COMMENTS:	H-20 AND 3A. STR. TRUCKS CONTROLLED BY DECK RATING. OTHER TRUCKS CONTROLLED BY GIRDER RATING. HL-93 INVENTORY RATING IS LESS THAN 1.00 FOR MOMENT.						

GENERAL

1. ALL MATERIALS AND CONSTRUCTION SHALL CONFORM TO STATE OF VERMONT, AGENCY OF TRANSPORTATION, 2011 STANDARD SPECIFICATIONS FOR CONSTRUCTION, AND ITS LATEST REVISIONS, AND THE AASHTO LRFD BRIDGE DESIGN SPECIFICATIONS, DATED 2014, AND ITS LATEST REVISIONS.

2. ALL WORK AND ANY ASSOCIATED ACTIVITY ON THIS PROJECT SHALL BE PERFORMED WITHIN THE EXISTING RIGHT-OF-WAY LIMITS.

3. THE CONTRACTOR IS MADE AWARE THAT EXISTING UTILITIES MAY EXIST WITHIN THE CONSTRUCTION LIMITS OF BRIDGE NO. 107N. THE LOCATION OF ANY UTILITY INFORMATION ON THE PLANS IS APPROXIMATE. NO CLAIMS ARE MADE TO THE ACCURACY OR COMPLETENESS OF THE UTILITIES SHOWN. THE CONTRACTOR IS SOLELY RESPONSIBLE FOR LOCATING AND PROTECTING FROM DAMAGE ALL UTILITIES ON SITE DURING ALL STAGES OF CONSTRUCTION. SEE SPECIAL PROVISIONS FOR ADDITIONAL INFORMATION AND REQUIREMENTS.

4. FOLLOWING THE COMPLETION OF ALL OTHER CONSTRUCTION ACTIVITIES, ALL BEAM SEATS SHALL BE CLEANED OFF. THE COST FOR CLEANING BEAM SEATS WILL BE INCIDENTAL TO ALL OTHER ITEMS IN THE CONTRACT.

5. THE CONTRACTOR SHALL BE RESPONSIBLE FOR REPAIRING ANY DAMAGE TO PRIVATE OR PUBLIC PROPERTY CAUSED BY THE CONTRACTOR AT THE CONTRACTOR'S EXPENSE AND TO THE SATISFACTION OF THE ENGINEER.

6. LIMITS OF GROUND SURVEY ARE BETWEEN STA 8607+24 AND STA 8612+61. OUTSIDE THESE LIMITS ARE APPROXIMATE LOCATIONS TAKEN FROM AERIAL MAPPING.

ENVIRONMENTAL

7. THE CONTRACTOR SHALL REVIEW AND UNDERSTAND ALL APPLICABLE ENVIRONMENTAL PERMITS AND ENSURE THAT ALL CONSTRUCTION CONDITIONS ARE MET.

8. EROSION CONTROL MEASURES SHALL BE UTILIZED AS REQUIRED AND SHALL BE PER SECTION 105 OF THE STANDARD SPECIFICATIONS AND THE LOW RISK SITE HANDBOOK FOR EROSION PREVENTION AND SEDIMENT CONTROL FROM THE AGENCY OF NATURAL RESOURCES. SEE SUBSECTION 105.23 FOR EROSION CONTROL PLAN REQUIREMENTS.

9. THE CONTRACTOR SHALL PREVENT ANY MATERIAL FROM ENTERING THE WATERWAY, RAILROAD, OR ROADWAY DURING EXCAVATION, PARTIAL REMOVAL OF STRUCTURE, OR CONSTRUCTING THE NEW DECK.

10. THE DESIGN INTENT IS TO ALLOW THE CONTRACTOR TO STAGE IN THE LANE CLOSURES OF THE TRAVELED ROADWAY OF THE APPROACHES TO THE BRIDGE. ANY STAGING AREAS OUTSIDE OF THIS SHALL BE CLEARED FOR RESOURCES THROUGH THE VTRANS ENVIRONMENTAL UNIT.

TRAFFIC CONTROL

11. SEE TRAFFIC CONTROL SHEET 1 FOR TRAFFIC CONTROL NOTES.

DECK REMOVAL AND RELATED ITEMS

12. THE INTENT OF THIS PROJECT IS TO PERFORM A FULL DECK REPLACEMENT FOR SPANS 2 THROUGH 4, AND SPAN 1 WILL CONSIST OF CURB AND RAIL REMOVAL AND REPLACEMENT, DECK REPAIRS, AND PAVEMENT AND MEMBRANE REMOVAL AND REPLACEMENT. THE PLANS DO NOT INCLUDE A FULL DECK REPLACEMENT FOR SPAN 1.

13. IF REPAIRS TO SPAN 1 DECK ARE EXTENSIVE, THE ENGINEER HAS THE OPTION TO CALL FOR A FULL DECK REPLACEMENT. THE COST FOR A FULL DECK REPLACEMENT SHALL BE INCLUDED IN THE ITEMS ALREADY INCLUDED IN THE CONTRACT. NO ADDITIONAL PAY ITEMS WILL BE PROVIDED TO FACILITATE THIS OPTION.

14. ITEM 529.20, "PARTIAL REMOVAL OF STRUCTURE" SHALL INCLUDE REMOVAL OF ANY PORTIONS OF SPANS 2 THROUGH 4 OF THE EXISTING STRUCTURE AS SHOWN ON THE PLANS, INCLUDING THE EXISTING BRIDGE DECK AND CURBS, SCUPPERS, BARRIER MEMBRANE, PAVEMENT, AND BRIDGE RAILING. ITEM 529.25, "REMOVAL OF CONCRETE OR MASONRY" SHALL INCLUDE REMOVAL OF THE EXISTING CONCRETE CURBS ALONG THE TOPS OF THE WINGWALLS AND ALONG SPAN 1 OF THE BRIDGE. ITEM 525.10, "REMOVAL OF EXISTING BRIDGE RAILING" SHALL INCLUDE REMOVAL OF THE EXISTING BRIDGE RAIL ALONG THE TOP OF THE WINGWALLS AND ALONG SPAN 1 OF THE BRIDGE. SEE BITUMINOUS CONCRETE/CONCRETE REMOVAL DETAIL ON SHEET 21.

15. THE EXISTING SPAN 1 CONCRETE CURBS AND THE TOPS OF THE EXISTING WINGWALLS SHALL BE REMOVED BY MECHANICAL MEANS AND THE REMAINING CONCRETE SHALL HAVE NEAT LINES AND BE SMOOTH. PROTECT ALL ELEMENTS INTENDED TO REMAIN.

16. AFTER REMOVAL OF THE EXISTING BRIDGE DECK, ANY AREAS ON THE CONCRETE BEAM SEAT THAT ARE FOUND TO BE UNSOUND SHALL BE BROUGHT TO THE ATTENTION OF THE ENGINEER. THE METHOD FOR DETERMINING AREAS OF UNSOUND CONCRETE SHALL BE APPROVED BY THE ENGINEER. THE ENGINEER SHALL MAKE A DETERMINATION AS TO HOW TO REPAIR THE DETERIORATED PORTION OF THE CONCRETE BEAM SEAT AND THE LIMITS OF THE REPAIR. THE REPAIRS SHALL BE PAID FOR UNDER ITEM 580.13, "REPAIR OF CONCRETE SUBSTRUCTURE SURFACE, CLASS I" OR ITEM 580.14, "REPAIR OF CONCRETE SUBSTRUCTRE SURFACE, CLASS II. QUANTITIES FOR ITEMS 580.13 AND 580.14 AS SHOWN ON THE QUANTITY SUMMARY SHEETS ARE ESTIMATED.

17. THE EXISTING STEEL AND HARDWARE FOR THE FINGER JOINT AT PIER #4 AND THE COMPRESSION JOINT AT ABUTMENT #4 SHALL REMAIN IN-PLACE DURING DECK REMOVAL OPERATIONS AS SHOWN ON SHEET 19. THE EXISTNG STEEL SHALL BE CLEANED IN ACCORDANCE WITH THE PROVISIONS OF SECTION 506. PAYMENT FOR THIS WORK SHALL BE CONSIDERED INCIDENTAL TO ITEM 529.20, "PARTIAL REMOVAL OF STRUCTURE". IF REMOVAL OF THE JOINT HARDWARE IS DETERMINED TO BE REQUIRED BY THE CONTRACTOR TO FACILITATE THE WORK, THE COST FOR THE REMOVAL OF THE HARDWARE WILL BE CONSIDERED INCIDENTAL TO ITEM 529.20, "PARTIAL REMOVAL OF STRUCTURE". RESETTING THE HARDWARE WILL BE CONSIDERED INCIDENTAL TO ITEM 501.33, "CONCRETE, HIGH PERFORMANCE CLASS A".

18. ANY AREAS OF THE EXISTING JOINT HARDWARE THAT ARE FOUND TO BE MISSING OR DAMAGED SHALL BE BROUGHT TO THE ATTENTION OF THE ENGINEER. THE ENGINEER SHALL MAKE A DETERMINATION AS TO HOW TO REPAIR THE DAMAGED HARDWARE IN ACCORDANCE WITH THE PROVISIONS OF SECTION 506 AND THE LIMITS OF THE REPAIR. THE REPAIRS SHALL BE PAID FOR UNDER ITEM 506.60, "STRUCTURAL STEEL". THE QUANTITY FOR ITEM 506.60 AS SHOWN ON THE QUANTITY SUMMARY SHEETS IS ESTIMATED.

19. THE COMPRESSION JOINT SEAL AT ABUTMENT #4 SHALL BE REMOVED AND REPLACED. THIS WORK SHALL BE PAID FOR UNDER ITEM 900.640, "SPECIAL PROVISION (REMOVE AND REPLACE COMPRESSION JOINT SEAL)".

STEEL

20. AFTER ALL PAVEMENT AND MEMBRANE ARE REMOVED BUT PRIOR TO THE REMOVAL OF THE EXISTING CONCRETE DECK, THE CONTRACTOR SHALL TAKE TOP OF DECK ELEVATIONS ALONG THE CENTERLINE OF EACH BEAM AT TENTH POINTS FROM CENTERLINE TO CENTERLINE OF BEARING. AFTER THE EXISTING CONCRETE DECK HAS BEEN REMOVED, THE CONTRACTOR SHALL TAKE ELEVATIONS ALONG THE TOP OF EACH BEAM AT TENTH POINTS FROM CENTERLINE TO CENTERLINE OF BEARING. THE TOP OF DECK AND TOP OF BEAM ELEVATIONS SHALL THEN BE SENT TO THE ENGINEER FOR USE IN DETERMINING THE FINAL PROFILE AND HAUNCH DEPTHS. THE CONTRACTOR SHOULD EXPECT 3 WORKING DAYS FOR VTRANS TO PREPARE THE REVISED PROFILE AND HAUNCH DEPTH CALCULATIONS.

21. THE EXISTING STRUCTURAL STEEL IS PAINTED WITH A MATERIAL THAT MAY CONTAIN LEAD. THE CONTRACTOR SHALL FOLLOW ALL APPLICABLE REGULATIONS WHEN HANDLING AND WORKING WITH THIS STEEL. ANY REMOVED STRUCTURAL STEEL IS THE PROPERTY OF THE CONTRACTOR. THE CONTRACTOR SHALL INDEMNIFY AND HOLD THE STATE AND ITS OFFICERS AND EMPLOYEES HARMLESS CONCERNING THE CONTRACTOR'S USE OR DISPOSITION OF THE REMOVED EXISTING STRUCTURAL STEEL.

22. SUPPORT BRACKETS FOR DECK OVERHANG FORMS SHALL BE SPACED AS REQUIRED BY DESIGN WITH A MAXIMUM SPACING OF 4 FEET AND SHALL EXTEND TO THE BOTTOM QUARTER OF THE WEB. THE DESIGN OF THE BRACKETS SHALL BE THE RESPONSIBILITY OF THE CONTRACTOR. DESIGN DRAWINGS AND WORKING DRAWINGS CONFORMING THE SECTION 105 OF THE STANDARD SPECIFICATIONS FOR CONSTRUCTION SHALL BE SUBMITTED. PAYMENT FOR THIS WORK WILL BE CONSIDERED INCIDENTAL TO ITEM 501.33, "CONCRETE, HIGH PERFORMANCE CLASS A".

23. NEW BRIDGE SCUPPERS WILL BE PROVIDED AT THE SAME LOCATIONS AS THE REMOVED SCUPPERS ON SPANS 2 THROUGH 4. THE NEW SCUPPERS WILL BE PAID FOR UNDER ITEM 900.620, "SPECIAL PROVISION (BRIDGE SCUPPER)".

REINFORCED CONCRETE

24. ALL CONCRETE SHALL CONFORM TO THE SPECIFICATIONS FOR CONCRETE, HIGH PERFORMANCE CLASS A. THE CONTRACTOR SHALL PROVIDE TESTING EQUIPMENT FOR CONCRETE IN ACCORDANCE WITH 631.05 OF THE STANDARD SPECIFICATIONS FOR CONSTRUCTION.

25. ALL REINFORCING STEEL SHALL BE LEVEL 1 - EPOXY COATED AND MEET THE REQUIREMENTS OF SECTION 507 OF THE STANDARD SPECIFICATIONS FOR CONSTRUCTION. A REINFORCING STEEL SCHEDULE AND SHOP DRAWINGS MEETING THE REQUIREMENTS OF SECTION 105.03 OF THE SPECIFICATIONS FOR CONSTRUCTION FOR WORKING DRAWINGS SHALL BE SUBMITTED. PAYMENT FOR THIS WORK WILL BE CONSIDERED INCIDENTAL TO ITEM 507.11, "REINFORCING STEEL, LEVEL 1".

26. WATER REPELLENT, SILANE SHALL BE APPLIED TO ALL EXPOSED CONCRETE BRIDGE DECK SURFACES EXCEPT THE UNDERSIDE OF THE DECK BETWEEN THE DRIP NOTCHES. THIS WORK WILL BE PAID FOR UNDER ITEM 514.10, "WATER REPELLENT, SILANE".

27. ALL REINFORCING SHALL BE DETAILED AND FABRICATED USING PROCEDURES AND TOLERANCES IN ACCORDANCE WITH APPLICABLE PUBLICATIONS OF THE "CONCRETE REINFORCING INSTITUTE".

28. MINIMUM CLEAR COVER FOR REINFORCING STEEL SHALL BE AS FOLLOWS:

ALONG BACKFACES OF WALL AGAINST EARTH:	2.0 INCH
ALONG TOP SURFACE OF DECK SLAB:	2.5 INCH
ALONG BOTTOM SURFACE OF DECK SLAB:	1.5 INCH
ELSEWHERE UNLESS OTHERWISE INDICATED:	3.0 INCH

PAVEMENT REMOVAL AND DECK REPAIRS

29. PAVEMENT REMOVAL SHOULD BE LIMITED AS SHOWN ON THE PLANS. THIS WORK SHALL BE IN ACCORDANCE WITH SECTION 529 OF THE STANDARD SPECIFICATIONS.

30. THE FINAL ONE HALF INCH OF PAVEMENT ON SPAN #1 OF THE CONCRETE BRIDGE DECK AND THE AT-GRADE APPROACH SLABS SHALL BE REMOVED BY LOADER, GRADER OR EQUIPMENT APPROVED BY THE ENGINEER. COLD PLANING TO REMOVE BRIDGE PAVEMENT WILL BE INCIDENTAL TO ITEM 529.10, "REMOVAL OF BRIDGE PAVEMENT".

31. DURING BRIDGE AND AT-GRADE APPROACH SLAB PAVEMENT REMOVAL, THE CONTRACTOR SHALL EXERCISE CARE TO INSURE THAT NO DAMAGE OCCURS TO SPAN #1 OF THE EXISTING CONCRETE BRIDGE DECK. ANY DAMAGE TO SPAN 1 OF THE CONCRETE BRIDGE DECK OR AT-GRADE APPROACH SLABS SHALL BE REPAIRED AT THE CONTRACTOR'S EXPENSE. REPAIRS SHALL BE MADE IN ACCORDANCE WITH SECTION 580.

32. CARE SHALL BE TAKEN TO PROTECT ANY SCUPPERS OR DROP INLETS IN SPAN 1 OF THE BRIDGE AT ALL STAGES OF CONSTRUCTION. ANY DAMAGE TO THESE STRUCTURES SHALL BE REPAIRED TO THE SATISFACTION OF THE ENGINEER AND AT THE CONTRACTOR'S EXPENSE.

33. AFTER THE REMOVAL OF THE BRIDGE PAVEMENT ON SPAN 1, THE BARRIER MEMBRANE SHALL BE REMOVED AND SPAN 1 OF THE CONCRETE BRIDGE DECK AND AT-GRADE APPROACH SLABS SHALL BE CLEANED IN ACCORDANCE WITH SUBSECTION 580.04 AND TO THE SATISFACTION OF THE ENGINEER. REMOVAL OF THE BARRIER MEMBRANE AND THE CLEANING OF SPAN 1 OF THE CONCRETE BRIDGE DECK WILL BE PAID FOR UNDER ITEM 580.16, "SURFACE PREPARATION FOR MEMBRANE".

34. ONCE THE EXISTING CONCRETE/GRANITE CURBS AND BARRIER MEMBRANE ARE REMOVED, ANY AREAS ON SPAN 1 OF THE CONCRETE BRIDGE DECK AND AT-GRADE APPROACH SLABS THAT ARE FOUND TO BE UNSOUND SHALL BE BROUGHT TO THE ATTENTION OF THE ENGINEER. THE METHOD FOR DETERMINING AREAS OF UNSOUND CONCRETE SHALL BE APPROVED BY THE ENGINEER. THE ENGINEER SHALL MAKE A DETERMINATION AS TO HOW TO REPAIR THE DETERIORATED PORTION OF THE SPAN 1 CONCRETE BRIDGE DECK AND AT-GRADE APPROACH SLABS AND THE LIMITS OF THE REPAIR. THE REPAIRS SHALL BE PAID FOR UNDER ITEM 580.10, "REPAIR OF CONCRETE SUPERSTRUCTURE SURFACE, CLASS I", ITEM 580.11, "REPAIR OF CONCRETE SUPERSTRUCTURE SURFACE, CLASS II", OR ITEM 580.12, "REPAIR OF CONCRETE SUPERSTRUCTURE SURFACE, CLASS III". QUANTITIES FOR ITEMS 580.10, 580.11, AND 580.12 AS SHOWN ON THE QUANTITY SUMMARY SHEETS ARE ESTIMATED.

PAVEMENT AND MEMBRANE

35. UPON THE ENGINEER'S APPROVAL OF THE CONCRETE BRIDGE DECK'S CONDITION, ITEM 519.20, "SHEET MEMBRANE WATERPROOFING, TORCH APPLIED" SHALL BE INSTALLED IN ACCORDANCE WITH SECTION 519. THE CONTRACTOR SHALL NOT INSTALL ITEM 519.20, "SHEET MEMBRANE WATERPROOFING, TORCH APPLIED" WHEN THE DECK CONCRETE AND/OR DECK PATCH AREAS' MOISTURE CONTENT IS ABOVE SECTION 519 SPECIFICATIONS OR MANUFACTURER'S SPECIFICATIONS, WHICHEVER IS LESS.

36. TRAFFIC WILL BE ALLOWED TO DRIVE ON THE BARE CONCRETE DECK (AFTER THE REMOVAL OF THE BARRIER MEMBRANE ON SPAN 1) AND PRIOR TO THE DECK BEING CLEANED AND PREPARED FOR THE NEW SHEET MEMBRANE. ONCE THE CONCRETE BRIDGE DECK IS PREPARED FOR THE NEW SHEET MEMBRANE, NO TRAFFIC WILL BE ALLOWED ON THE NEW MEMBRANE UNTIL THE SECOND LIFT OF BITUMINOUS CONCRETE PAVEMENT IS IN PLACE.

37. FOLLOWING THE INSTALLATION OF THE NEW SHEET MEMBRANE WATERPROOFING ON THE NEW AND EXISTING SPANS OF CONCRETE BRIDGE DECK, THE SOUTHERN ROADWAY APPROACH, CONCRETE BRIDGE DECK, AND AT-GRADE APPROACH SLAB #5 SHALL BE PAVED CURB TO CURB WITH ITEM 900.680, "SPECIAL PROVISION (BITUMINOUS CONCRETE PAVEMENT, SMALL QUANTITY)" IN TWO 1¼" LIFTS. THE SECOND LIFT SHALL TAPER TO 1" AT THE PIER #4 FINGER JOINT AND THE ABUTMENT #4 COMPRESSION SEAL TO ACCOMMODATE THE EXISTING STEEL PLATES AND HARDWARE. SEE JOINT, PAVEMENT, AND MEMBRANE LAYOUT ON SHEET 18 FOR TAPER LOCATIONS. AT-GRADE APPROACH SLAB #6 AND THE NORTHERN ROADWAY APPROACH SHALL BE PAVED CURB TO CURB WITH ITEM 900.680, "SPECIAL PROVISION (BITUMINOUS CONCRETE PAVEMENT, SMALL QUANTITY)" WITH ONE 1¼" LIFT AND ONE 1" LIFT. ALL PAVEMENT SHALL BE MARSHAL MIX TYPE IV FOR BOTH LIFTS, NO EXCEPTIONS.

38. CARE SHALL BE EXERCISED TO SMOOTHLY TRANSITION THE NEW BRIDGE PAVEMENT INTO THE EXISTING PAVEMENT. ANY COLD PLANING NECESSARY FOR SHAPING BRIDGE APPROACHES SHALL BE PAID FOR UNDER ITEM 210.10, "COLD PLANING, BITUMINOUS PAVEMENT".

39. TESTING FOR PAVEMENT DENSITY WILL REQUIRE CORES OF THE PAVEMENT ON THE BRIDGE. THE COST FOR THIS WORK WILL BE INCIDENTAL TO ITEM 900.680, "SPECIAL PROVISION (BITUMINOUS CONCRETE PAVEMENT, SMALL QUANTITY)". ANY DAMAGE TO THE NEW SHEET MEMBRANE CAUSED BY CORING THE PAVEMENT SHALL BE REPAIRED TO THE SATISFACTION OF THE ENGINEER AND AT THE CONTRACTOR'S EXPENSE.

40. ALL PG BINDER USED IN BITUMINOUS CONCRETE PAVEMENT SHALL BE IN ACCORDANCE WITH SUBSECTION 490.03B.

41. ANY REQUIRED SAWCUT OF EXISTING PAVEMENT WILL BE CONSIDERED INCIDENTAL TO ITEM 900.680, "SPECIAL PROVISION (BITUMINOUS CONCRETE PAVEMENT, SMALL QUANTITY)".

42. EMULSIFIED ASPHALT SHALL BE APPLIED AT A RATE OF 0.08 GAL/SY TO ALL COLD PLANED SURFACES AND AT A RATE OF 0.04 GAL/SY BETWEEN PAVEMENT LIFTS OR AS DIRECTED BY THE ENGINEER. PAYMENT WILL BE CONSIDERED INCIDENTAL TO ITEM 900.680, "SPECIAL PROVISION (BITUMINOUS CONCRETE PAVEMENT, SMALL QUANTITY)".

43. THE CONTRACTOR SHALL INSTALL TEMPORARY PAVEMENT MARKINGS ON ALL PAVED SURFACES THAT WILL NOT HAVE THE PERMANENT MARKINGS APPLIED WITHIN 14 CALENDAR DAYS OF THE FINAL PAVING OPERATIONS AS DIRECTED BY THE ENGINEER.

44. UPON COMPLETION OF ALL PAVING OPERATIONS, FINAL PAVEMENT MARKINGS SHALL BE INSTALLED TO REPLICATE THE EXISTING CONFIGURATION.

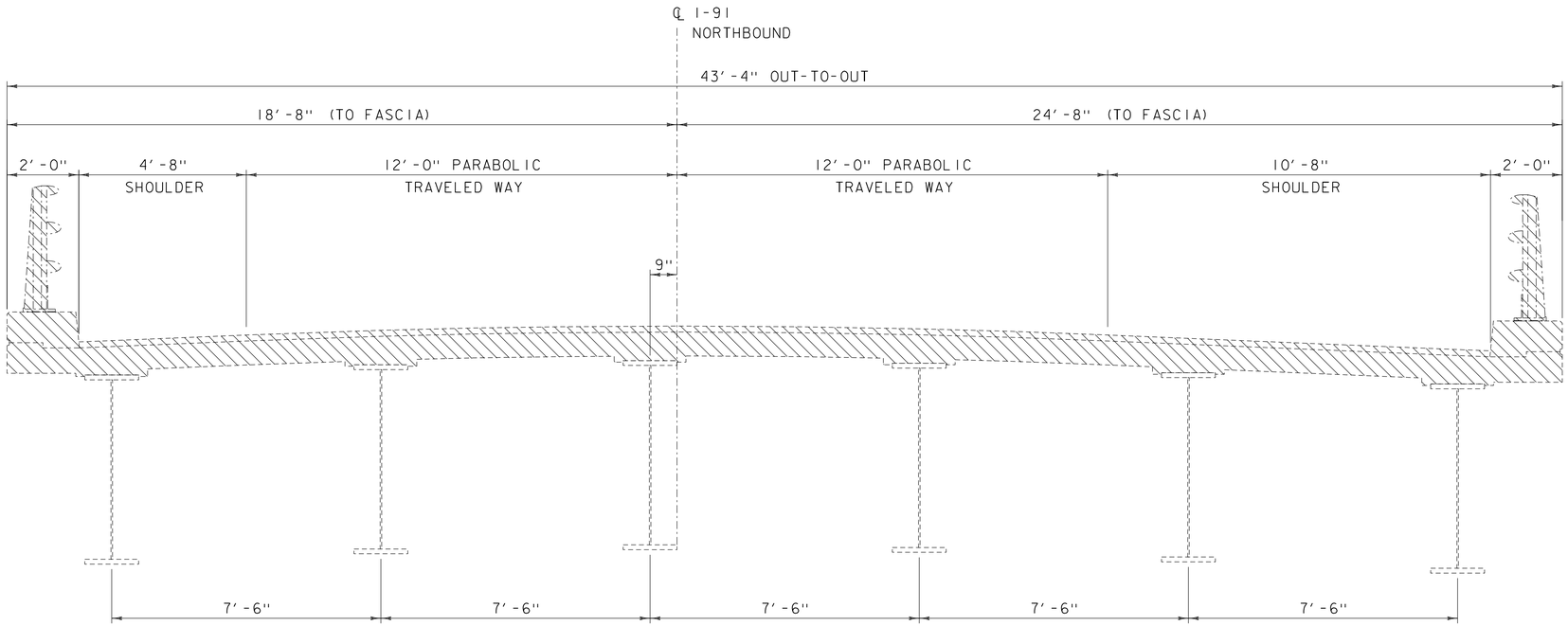

PARTIAL REMOVAL OF STRUCTURE

EXISTING BRIDGE TYPICAL

SCALE: 1/2" = 1'-0"

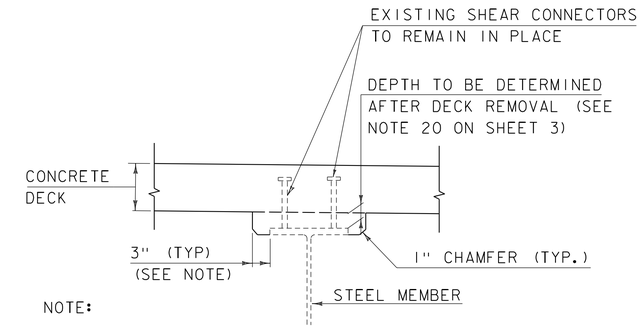

NOTE:

THE 3" HORIZONTAL SECTION MAY BE ELIMINATED FOR FORMING SYSTEMS DESIGNED FOR THE CONSTRUCTION OF VERTICAL HAUNCHES. ANY VOIDS RESULTING FROM FORMING SYSTEM ELEMENTS SHALL BE FILLED WITH JOINT SEALER, POLYURETHANE MEETING THE REQUIREMENTS OF SECTION 524. THE COST OF THE JOINT SEALER, POLYURETHANE SHALL BE INCIDENTAL TO THE ADJACENT CONCRETE.

HAUNCH AND SHEAR CONNECTOR DETAIL

SCALE: 3/4" = 1'-0"

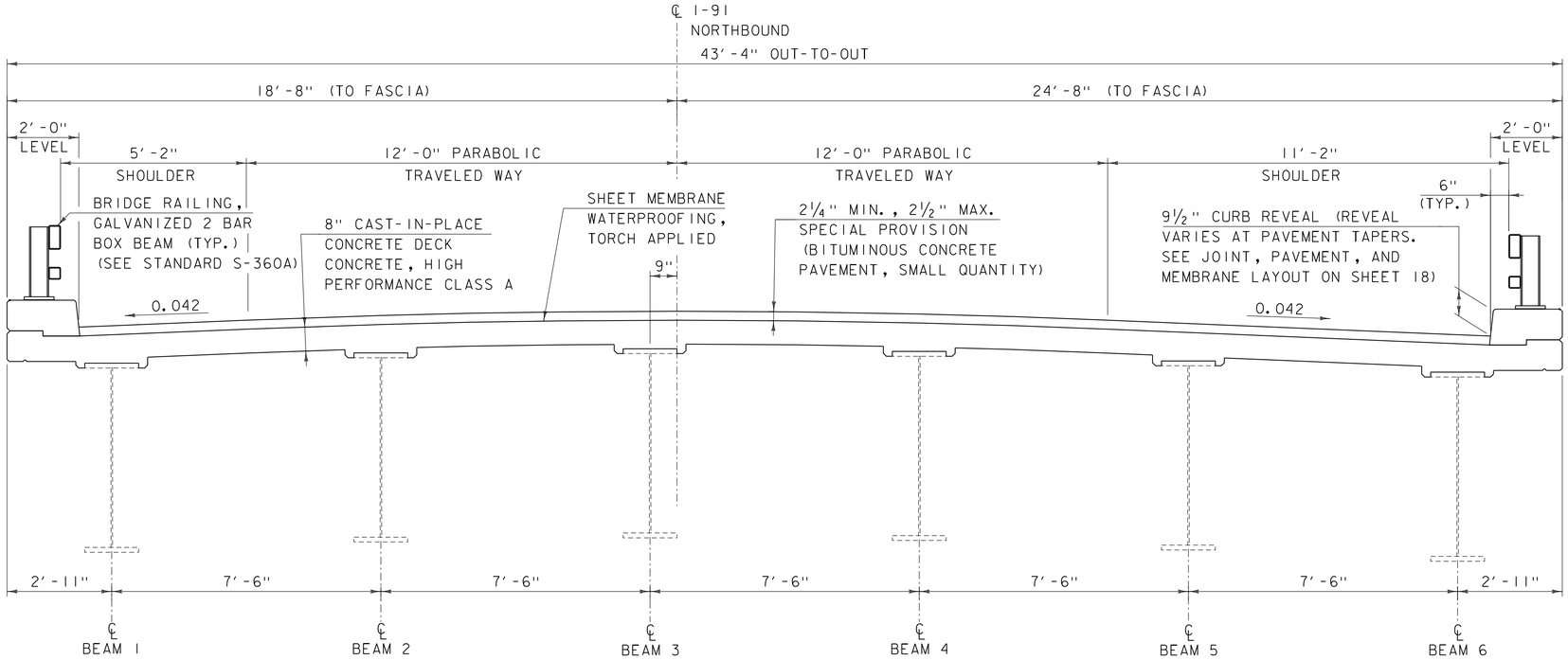

TYPICAL BRIDGE SECTION

(SPANS 2 THROUGH 4)
SCALE: 1/2" = 1'-0"

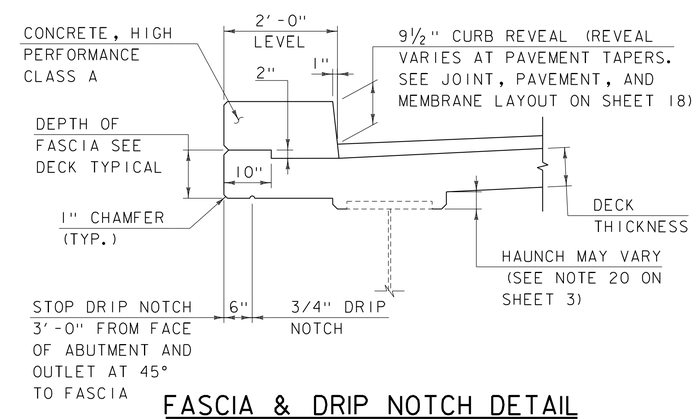

FASCIA & DRIP NOTCH DETAIL

SCALE: 3/4" = 1'-0"

PROJECT NAME: IRASBURG	
PROJECT NUMBER: IM DECK(46)	
FILE NAME: z15all6typ-107N.dgn	PLOT DATE: 12/4/2015
PROJECT LEADER: J. BYATT	DRAWN BY: M. SMITH
DESIGNED BY: N. CARON	CHECKED BY: S. BEAUMONT
TYPICAL BRIDGE SECTIONS SHEET	SHEET 4 OF 45

CONSULTING ENGINEERS

MODEL: Sheet01

CLD 15-0223

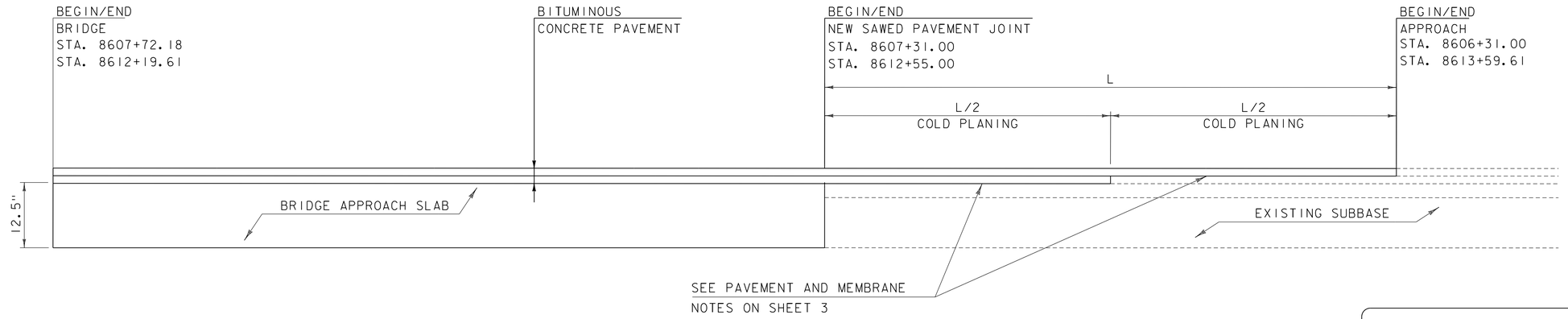

MATERIAL TRANSITION DIAGRAM

NOT TO SCALE

SOUTHERN APPROACH

2½" SPECIAL PROVISION (BITUMINOUS CONCRETE PAVEMENT, SMALL QUANTITY) (2 -1¼" LIFTS) (TYPE IV)

NORTHERN APPROACH

2¼" SPECIAL PROVISION (BITUMINOUS CONCRETE PAVEMENT, SMALL QUANTITY) (1 -¼" LIFT OVER 1 - 1" LIFT) (TYPE IV)

MATERIAL TOLERANCES	
SURFACE	
- PAVEMENT (TOTAL THICKNESS)	+/- ¼"
- AGGREGATE SURFACE COURSE	+/- ½"
SUBBASE	+/- 1"

NOTE

1. EMULSIFIED ASPHALT SHALL BE APPLIED TO ALL COLD PLANED SURFACES AT A RATE OF 0.080 GAL/SY AND BETWEEN EACH LIFT OF PAVEMENT AT A RATE OF 0.040 GAL/SY OR AS DIRECTED BY THE ENGINEER.

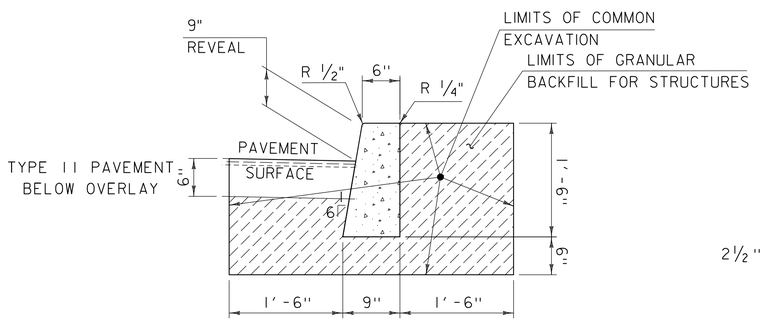

TYPICAL CAST-IN-PLACE CONCRETE CURB, TYPE B EARTHWORKS DETAIL

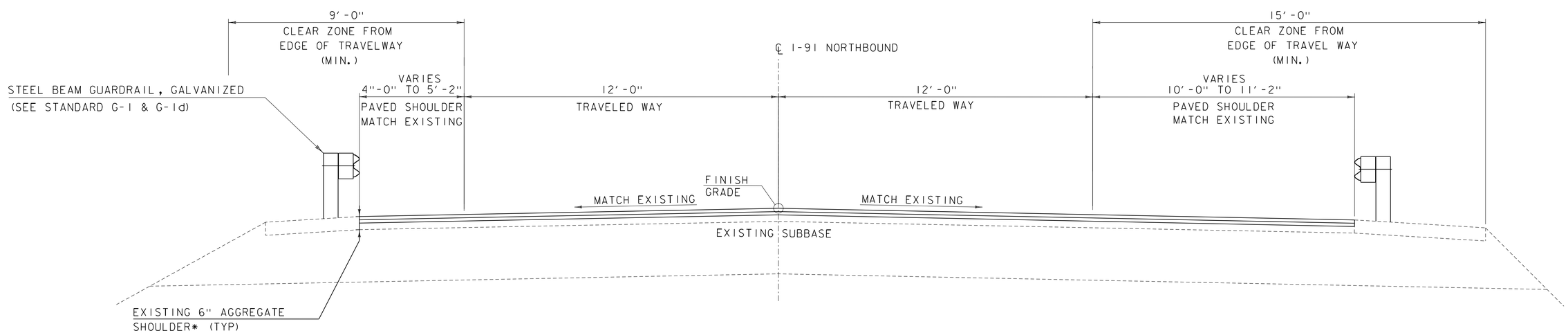

NOTE:
IN THE EVENT THAT COLD PLANING OF THE RIGHT ROADWAY SHOULDERS ALONG BRIDGE APPROACHES EXPOSES GRAVEL SUBBASE, THE CONTRACTOR SHALL REMOVE 2" OF GRAVEL SUBBASE, PREPARE THE AREA AS DIRECTED BY THE ENGINEER, AND PROVIDE 2" BASE PAVEMENT. IN ADDITION TO THE PAVEMENT DEPTH TO BE PLACED IN ALL OTHER LOCATIONS PER THE PAVEMENT, JOINT, AND MEMBRANE LAYOUT ON SHEET 18, AN ADDITIONAL QUANTITY HAS BEEN INCLUDED IN THE ESTIMATE UNDER ITEM 900.680, "SPECIAL PROVISION (BITUMINOUS CONCRETE PAVEMENT, SMALL QUANTITY)" TO ADDRESS THIS WORK. WHERE DETERMINED BY THE ENGINEER, PAYMENT FOR BASE PREPARATION WILL BE PAID FOR UNDER EQUIPMENT RENTAL ITEMS.

I-91 TYPICAL SECTION

SCALE: ½" = 1'-0"

*REPLACE AGGREGATE SHOULDER AS NEEDED, AS DIRECTED BY THE ENGINEER

PROJECT NAME: IRASBURG	
PROJECT NUMBER: IM DECK(46)	
FILE NAME: z15all6typ-107N.dgn	PLOT DATE: 12/4/2015
PROJECT LEADER: J. BYATT	DRAWN BY: P. McKECHNIE
DESIGNED BY: L. GREER	CHECKED BY: S. FORTIER
TYPICAL ROADWAY SECTIONS SHEET	SHEET 5 OF 45

CLD 15-0223 MODEL: Sheet02

STATE OF VERMONT
AGENCY OF TRANSPORTATION

QUANTITY SHEET 1

SUMMARY OF ESTIMATED QUANTITIES				TOTALS		DESCRIPTIONS			
ROADWAY	EROSION CONTROL	BRIDGE NO. 107N	FULL C.E. ITEMS	GRAND TOTAL	FINAL	UNIT	ITEMS	ITEM NUMBER	ROUND
20				20		CY	COMMON EXCAVATION	203.15	4
15				15		CY	GRANULAR BACKFILL FOR STRUCTURES	204.30	-
900				900		SY	COLD PLANING, BITUMINOUS PAVEMENT	210.10	9
6				6		TON	AGGREGATE SHOULDERS	402.12	0.8
		523		523		CY	CONCRETE, HIGH PERFORMANCE CLASS A	501.33	0.97
		1000		1000		LB	STRUCTURAL STEEL	506.60	EST.
		139032		139032		LB	REINFORCING STEEL, LEVEL I	507.11	0.61
		38		38		GAL	WATER REPELLENT, SILANE	514.10	0.76
		54		54		LF	BRIDGE EXPANSION JOINT, ASPHALTIC PLUG	516.10	0.65
		1939		1939		SY	SHEET MEMBRANE WATERPROOFING, TORCH APPLIED	519.20	0.82
		79		79		LF	JOINT SEALER, HOT POURED	524.11	0.33
		206		206		LF	REMOVAL OF EXISTING BRIDGE RAILING	525.10	0.02
		952.41		952.41		LF	BRIDGE RAILING, GALVANIZED 2 RAIL BOX BEAM	525.33	-
		670		670		SY	REMOVAL OF BRIDGE PAVEMENT	529.10	3.41
		1		1		EACH	PARTIAL REMOVAL OF STRUCTURE	529.20	-
		15		15		CY	REMOVAL OF CONCRETE OR MASONRY	529.25	1.97
		10		10		SY	REPAIR OF CONCRETE SUPERSTRUCTURE SURFACE, CLASS I	580.10	EST.
		25		25		SY	REPAIR OF CONCRETE SUPERSTRUCTURE SURFACE, CLASS II	580.11	EST.
		3		3		CY	REPAIR OF CONCRETE SUPERSTRUCTURE SURFACE, CLASS III	580.12	EST.
		15		15		SY	REPAIR OF CONCRETE SUBSTRUCTURE SURFACE, CLASS I	580.13	EST.
		15		15		SY	REPAIR OF CONCRETE SUBSTRUCTURE SURFACE, CLASS II	580.14	EST.
		3010		3010		SF	SURFACE PREPARATION FOR MEMBRANE	580.16	1.78
	5			5		HR	ALL PURPOSE EXCAVATOR RENTAL, TYPE I	608.25	EST.
	5			5		HR	TRUCK RENTAL	608.37	EST.
160				160		LF	CAST-IN-PLACE CONCRETE CURB, TYPE B	616.28	-
		238		238		LF	SNOW BARRIER	620.75	-
112.5				112.5		LF	STEEL BEAM GUARDRAIL, GALVANIZED	621.20	8.5
2				2		EACH	ANCHOR FOR STEEL BEAM RAIL	621.60	-
		4		4		EACH	GUARDRAIL APPROACH SECTION, GALVANIZED 2 RAIL BOX BEAM	621.72	-
190				190		LF	REMOVAL AND DISPOSAL OF GUARDRAIL	621.80	9
			1	1		LS	FIELD OFFICE, ENGINEERS	631.10	-
			1	1		LS	TESTING EQUIPMENT, CONCRETE	631.16	-
			3000	3000		DL	FIELD OFFICE TELEPHONE (N.A.B.I.)	631.26	-
1				1		LS	MOBILIZATION/DEMOBILIZATION	635.11	-
950				950		LF	DURABLE 6 INCH WHITE LINE, EPOXY PAINT	646.423	38.8
750				750		LF	DURABLE 6 INCH YELLOW LINE, EPOXY PAINT	646.433	21
60				60		EACH	LINE STRIPING TARGETS	646.76	-
5				5		EACH	REMOVING SIGNS	675.50	-
5				5		EACH	ERECTING SALVAGED SIGNS	675.60	-
2				2		EACH	DELINEATOR WITH STEEL POST	676.10	-

DETAILED SUMMARY OF QUANTITIES

QUANTITIES	UNIT	ITEMS

PROJECT NAME: IRASBURG
PROJECT NUMBER: IM DECK(46)

FILE NAME: z15a116qss-107N.dgn
PROJECT LEADER: J. BYATT
DESIGNED BY: J. FRENCH
QUANTITY SHEET 1

PLOT DATE: 12/4/2015
DRAWN BY: M. SMITH
CHECKED BY: A. GIRALDI
SHEET 6 OF 45

STATE OF VERMONT
AGENCY OF TRANSPORTATION

QUANTITY SHEET 2

SUMMARY OF ESTIMATED QUANTITIES

ROADWAY	EROSION CONTROL	BRIDGE NO. 107N	FULL C.E. ITEMS	GRAND TOTAL	FINAL	UNIT	ITEMS	ITEM NUMBER	ROUND
1				1		LU	PRICE ADJUSTMENT, FUEL (N.A.B.I.)	690.50	-
		14		14		EACH	SPECIAL PROVISION (BRIDGE SCUPPER)	900.620	-
6				6		EACH	SPECIAL PROVISION (CPM SCHEDULE)	900.620	-
		58		58		LF	SPECIAL PROVISION (REMOVE AND REPLACE COMPRESSION SEAL)	900.640	0.65
1				1		LS	SPECIAL PROVISION (TRAFFIC CONTROL, ALL INCLUSIVE)	900.645	-
1				1		LU	SPECIAL PROVISION (MAT DENSITY PAY ADJUSTMENT, SMALL QUANTITY) (N.A.B.I.)	900.650	
1				1		LU	SPECIAL PROVISION (MIXTURE PAY ADJUSTMENT) (N.A.B.I.)	900.650	
110		320		430		TON	SPECIAL PROVISION (BITUMINOUS CONCRETE PAVEMENT, SMALL QUANTITY)	900.680	9

DETAILED SUMMARY OF QUANTITIES

QUANTITIES	UNIT	ITEMS
		SPECIAL PROVISION (BITUMINOUS CONCRETE PAVEMENT, SMALL QUANTITY)
9.5	TON	TYPE II
91.5	TON	TYPE IV
101	TON	SUBTOTAL
9	TON	ROUNDING
110	TON	TOTAL

PROJECT NAME: IRASBURG
PROJECT NUMBER: IM DECK(46)

FILE NAME: z15a116qss-107N.dgn
PROJECT LEADER: J. BYATT
DESIGNED BY: J. FRENCH
QUANTITY SHEET 2

PLOT DATE: 12/4/2015
DRAWN BY: M. SMITH
CHECKED BY: A. GIRALDI
SHEET 7 OF 45

GENERAL INFORMATION

SYMBOLOGY LEGEND NOTE

THE SYMBOLOGY ON THIS SHEET IS INTENDED TO COVER STANDARD CONVENTIONAL SYMBOLOGY. THE SYMBOLOGY IS USED FOR EXISTING & PROPOSED FEATURES WITH HEAVIER LINEWEIGHT, IN COMBINATION WITH PROJECT ANNOTATION, AS NOTED ON PROJECT PLAN SHEETS. THIS LEGEND SHEET COVERS THE BASICS. SYMBOLOGY ON PLANS MAY VARY, PLAN ANNOTATIONS AND NOTES SHOULD BE USED TO CLARIFY AS NEEDED.

R.O.W. ABBREVIATIONS (CODES) & SYMBOLS

POINT	CODE	DESCRIPTION
	CH	CHANNEL EASEMENT
	CONST	CONSTRUCTION EASEMENT
	CUL	CULVERT EASEMENT
	D&C	DISCONNECT & CONNECT
	DIT	DITCH EASEMENT
	DR	DRAINAGE EASEMENT
	DRIVE	DRIVEWAY EASEMENT
	EC	EROSION CONTROL
	HWY	HIGHWAY EASEMENT
	I&M	INSTALL & MAINTAIN EASEMENT
	LAND	LANDSCAPE EASEMENT
	R&RES	REMOVE & RESET
	R&REP	REMOVE & REPLACE
	SR	SLOPE RIGHT
	UE	UTILITY EASEMENT
	(P)	PERMANENT EASEMENT
	(T)	TEMPORARY EASEMENT
■	BNDNS	BOUND SET
⊡	BNDNS	BOUND TO BE SET
●	IPNS	IRON PIN SET
◎	IPNS	IRON PIN TO BE SET
⊠	CALC	EXISTING ROW POINT
○	PROW	PROPOSED ROW POINT
[LENGTH]		LENGTH CARRIED ON NEXT SHEET

COMMON TOPOGRAPHIC POINT SYMBOLS

POINT	CODE	DESCRIPTION
	APL	BOUND APPARENT LOCATION
	BM	BENCHMARK
	BND	BOUND
	CB	CATCH BASIN
	COMB	COMBINATION POLE
	DITHR	DROP INLET THROATED DNC
	EL	ELECTRIC POWER POLE
	FPOLE	FLAGPOLE
	GASFIL	GAS FILLER
	GP	GUIDE POST
	GSO	GAS SHUT OFF
	GUY	GUY POLE
	GUYW	GUY WIRE
	GV	GATE VALUE
	H	TREE HARDWOOD
	HCTRL	CONTROL HORIZONTAL
	HVCTRL	CONTROL HORIZ. & VERTICAL
	HYD	HYDRANT
	IP	IRON PIN
	IPIPE	IRON PIPE
	LI	LIGHT - STREET OR YARD
	MB	MAILBOX
	MH	MANHOLE (MH)
	MM	MILE MARKER
	PM	PARKING METER
	PMK	PROJECT MARKER
	POST	POST STONE/WOOD
	RRSIG	RAILROAD SIGNAL
	RRSL	RAILROAD SWITCH LEVER
	S	TREE SOFTWOOD
	SAT	SATELLITE DISH
	SHRUB	SHRUB
	SIGN	SIGN
	STUMP	STUMP
	TEL	TELEPHONE POLE
	TIE	TIE
	TSIGN	SIGN W/DOUBLE POST
	VCTRL	CONTROL VERTICAL
	WELL	WELL
	WSO	WATER SHUT OFF

THESE ARE COMMON VAOT SURVEY POINT SYMBOLS FOR EXISTING FEATURES, ALSO USED FOR PROPOSED FEATURES WITH HEAVIER LINEWEIGHT, IN COMBINATION WITH PROPOSED ANNOTATION.

PROPOSED GEOMETRY CODES

CODE	DESCRIPTION
PC	POINT OF CURVATURE
PI	POINT OF INTERSECTION
CC	CENTER OF CURVE
PT	POINT OF TANGENCY
PCC	POINT OF COMPOUND CURVE
PRC	POINT OF REVERSE CURVE
POB	POINT OF BEGINNING
POE	POINT OF ENDING
STA	STATION PREFIX
AH	AHEAD STATION SUFFIX
BK	BACK STATION SUFFIX
D	CURVE DEGREE OF (100FT)
R	CURVE RADIUS OF
T	CURVE TANGENT LENGTH
L	CURVE LENGTH OF
E	CURVE EXTERNAL DISTANCE

UTILITY SYMBOLOGY

UNDERGROUND UTILITIES

	UTILITY (GENERIC-UNKNOWN)
UT	TELEPHONE
UE	ELECTRIC
UC	CABLE (TV)
UEC	ELECTRIC+CABLE
UET	ELECTRIC+TELEPHONE
UCT	CABLE+TELEPHONE
UECT	ELECTRIC+CABLE+TELEP.
G	GAS LINE
W	WATER LINE
S	SANITARY SEWER (SEPTIC)

ABOVE GROUND UTILITIES (AERIAL)

	UTILITY (GENERIC-UNKNOWN)
T	TELEPHONE
E	ELECTRIC
C	CABLE (TV)
EC	ELECTRIC+CABLE
ET	ELECTRIC+TELEPHONE
AER E&T	ELECTRIC+TELEPHONE
CT	CABLE+TELEPHONE
ECT	ELECTRIC+CABLE+TELEP.
	UTILITY POLE GUY WIRE

PROJECT CONSTRUCTION SYMBOLOGY

PROJECT DESIGN & LAYOUT SYMBOLOGY

CZ	CLEAR ZONE
	PLAN LAYOUT MATCHLINE

PROJECT CONSTRUCTION FEATURES

	TOP OF CUT SLOPE
	TOE OF FILL SLOPE
	STONE FILL
	BOTTOM OF DITCH ℄
	CULVERT PROPOSED
	STRUCTURE SUBSURFACE
PDF	PROJECT DEMARCATION FENCE
BF	BARRIER FENCE
	TREE PROTECTION ZONE (TPZ)
	STRIPING LINE REMOVAL
	SHEET PILES

CONVENTIONAL BOUNDARY SYMBOLOGY

BOUNDARY LINES

TOWN LINE	TOWN BOUNDARY LINE
COUNTY LINE	COUNTY BOUNDARY LINE
STATE LINE	STATE BOUNDARY LINE
	PROPOSED STATE R.O.W. (LIMITED ACCESS)
	PROPOSED STATE R.O.W.
	STATE ROW (LIMITED ACCESS)
	STATE ROW
	TOWN ROW
	PERMANENT EASEMENT LINE (P)
	TEMPORARY EASEMENT LINE (T)
	SURVEY LINE
P L	PROPERTY LINE (P/L)
SR	SLOPE RIGHTS
6f	6F PROPERTY BOUNDARY
4f	4F PROPERTY BOUNDARY
HAZ	HAZARDOUS WASTE

EPSC LAYOUT PLAN SYMBOLOGY

EPSC MEASURES

ONNNOONNNOONNNO	FILTER CURTAIN
	SILT FENCE
	SILT FENCE WOVEN WIRE
	CHECK DAM
	DISTURBED AREAS REQUIRING RE-VEGETATION
	EROSION MATTING

ENVIRONMENTAL RESOURCES

	WETLAND BOUNDARY
	RIPARIAN BUFFER ZONE
	WETLAND BUFFER ZONE
	SOIL TYPE BOUNDARY
T&E	THREATENED & ENDANGERED SPECIES
HAZ HAZ	HAZARDOUS WASTE AREA
AG	AGRICULTURAL LAND
HABITAT	FISH & WILDLIFE HABITAT
FLOOD PLAIN	FLOOD PLAIN
OHW	ORDINARY HIGH WATER (OHW)
	STORM WATER
	USDA FOREST SERVICE LANDS
	WILDLIFE HABITAT SUIT/CONN

ARCHEOLOGICAL & HISTORIC

ARCH	ARCHEOLOGICAL BOUNDARY
HISTORIC DIST	HISTORIC DISTRICT BOUNDARY
HISTORIC	HISTORIC AREA
H	HISTORIC STRUCTURE

CONVENTIONAL TOPOGRAPHIC SYMBOLOGY

EXISTING FEATURES

	ROAD EDGE PAVEMENT
	ROAD EDGE GRAVEL
	DRIVEWAY EDGE
	DITCH
	FOUNDATION
	FENCE (EXISTING)
	FENCE WOOD POST
	FENCE STEEL POST
	GARDEN
	ROAD GUARDRAIL
	RAILROAD TRACKS
	CULVERT (EXISTING)
	STONE WALL
	WALL
	WOOD LINE
	BRUSH LINE
	HEDGE
	BODY OF WATER EDGE
	LEDGE EXPOSED

CLD 15-0223 MODEL: Sheet

CONSULTING ENGINEERS

PROJECT NAME: IRASBURG	
PROJECT NUMBER: IM DECK(46)	
FILE NAME: z15all6legend-107N.dgn	PLOT DATE: 12/4/2015
PROJECT LEADER: J. BYATT	DRAWN BY: P. McKECHNIE
DESIGNED BY: L. GREER	CHECKED BY: S. FORTIER
CONVENTIONAL SYMBOLOGY LEGEND SHEET	SHEET 8 OF 45

EXISTING BRIDGE DATA:

ROLLED BEAM, CONCRETE DECK-SPAN 1
3-SPAN CONTINUOUS WELDED PLATE
GIRDER, CONCRETE DECK-SPAN 2-4.
LENGTH = 447'0"
WIDTH = 39'-4" RAIL-TO-RAIL
BUILT IN 1971

DURABLE 6 INCH WHITE LINE, EPOXY PAINT
8606+31 TO 8613+60 LT (SOLID)
8606+31 TO 8613+60 LT (DASHED)

DURABLE 6 INCH YELLOW LINE, EPOXY PAINT
8606+31 TO 8613+60 RT (SOLID)

REMOVAL AND DISPOSAL OF GUARDRAIL
8607+21 TO 8607+67 LT
8606+79 TO 8607+24 RT
8612+58 TO 8613+03 LT
8612+21 TO 8612+66 RT

STEEL BEAM GUARDRAIL, GALVANIZED
8606+79 TO 8607+04 RT
8607+21 TO 8607+46 LT
8612+41 TO 8612+66 RT
8612+78 TO 8613+03 LT

ANCHOR FOR STEEL BEAM RAIL
8612+66 RT
8613+03 LT

DELINEATOR WITH STEEL POST
8612+66 RT
8613+03 LT

CAST-IN-PLACE CONCRETE CURB, TYPE B
8606+93 TO 8607+33 RT
8607+35 TO 8607+75 LT
8612+12 TO 8612+52 RT
8612+49 TO 8612+89 LT

REMOVING SIGNS
AS SHOWN - 5

ERECTING SALVAGED SIGNS
AS SHOWN - 5

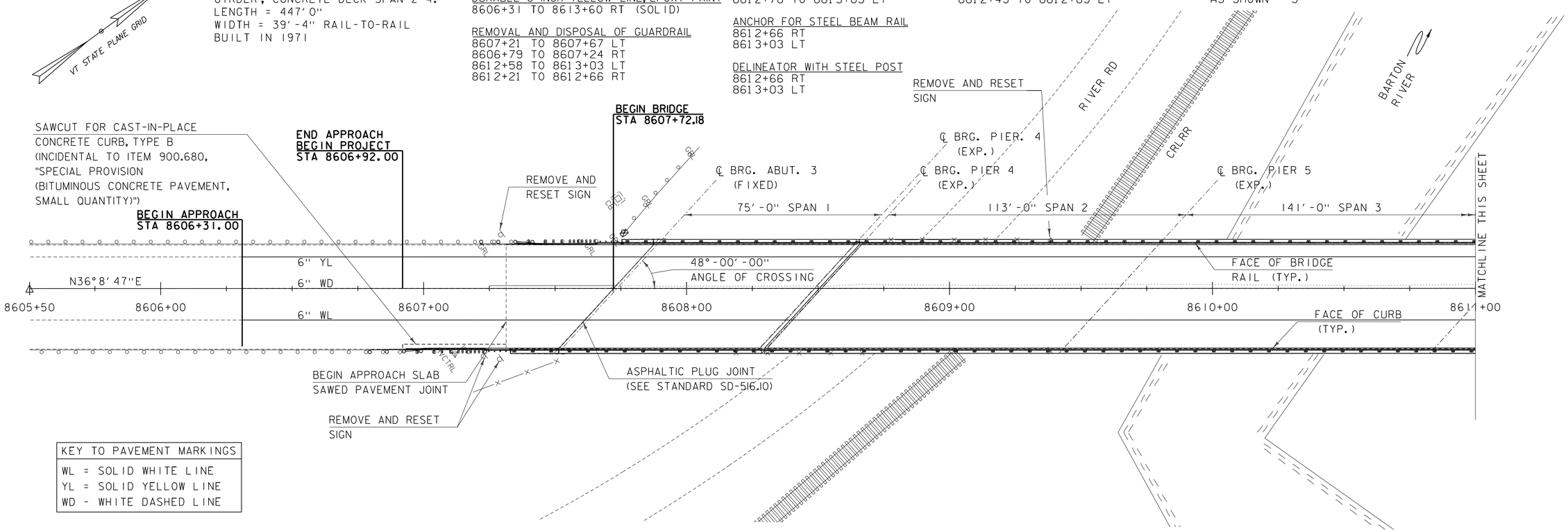

KEY TO PAVEMENT MARKINGS
WL = SOLID WHITE LINE
YL = SOLID YELLOW LINE
WD - WHITE DASHED LINE

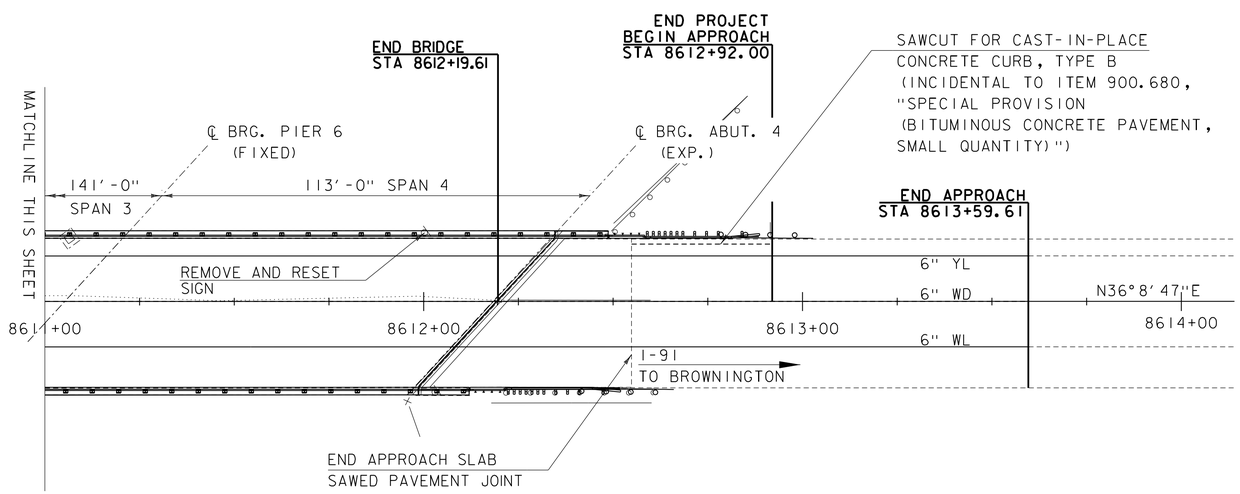

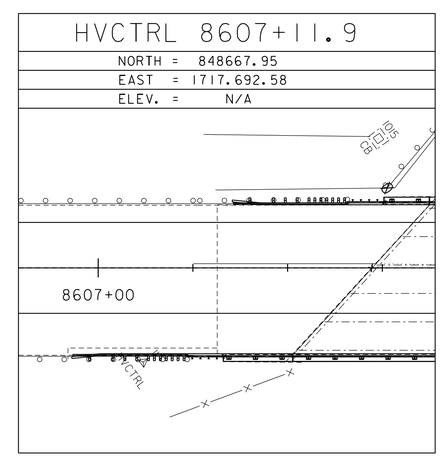

0 20 40
(SCALE 1" = 20')

CONSULTING ENGINEERS

PROJECT NAME: IRASBURG	
PROJECT NUMBER: IM DECK(46)	
FILE NAME: z15all6bdr-107N.dgn	PLOT DATE: 12/4/2015
PROJECT LEADER: J. BYATT	DRAWN BY: P. McKECHNIE
DESIGNED BY: L. GREER	CHECKED BY: S. FORTIER
LAYOUT SHEET	SHEET 9 OF 45

CLD 15-0223 MODEL: Sheet101

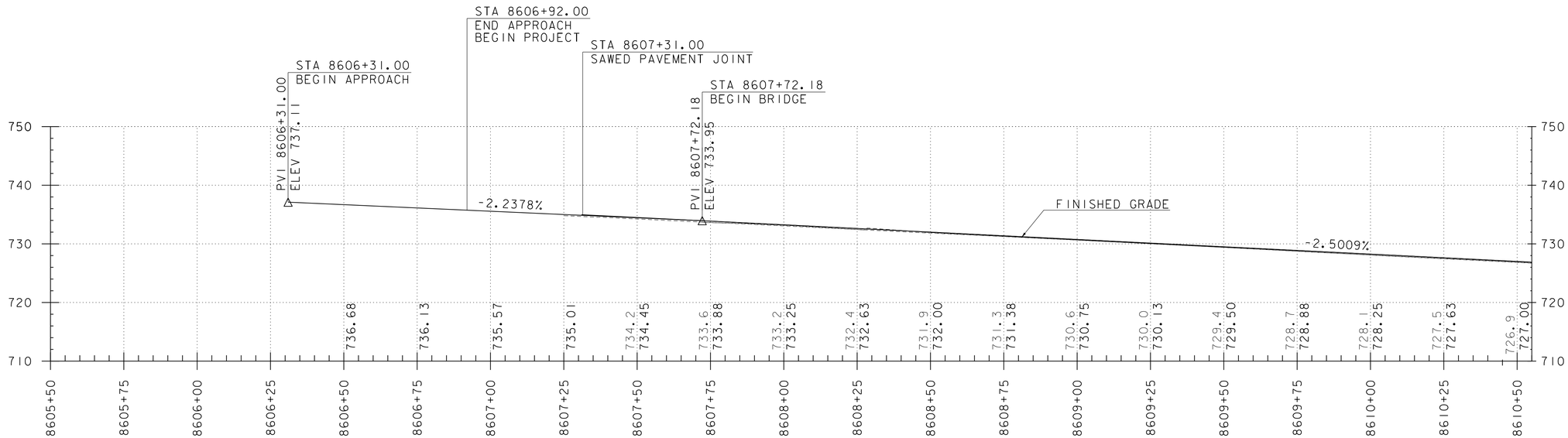

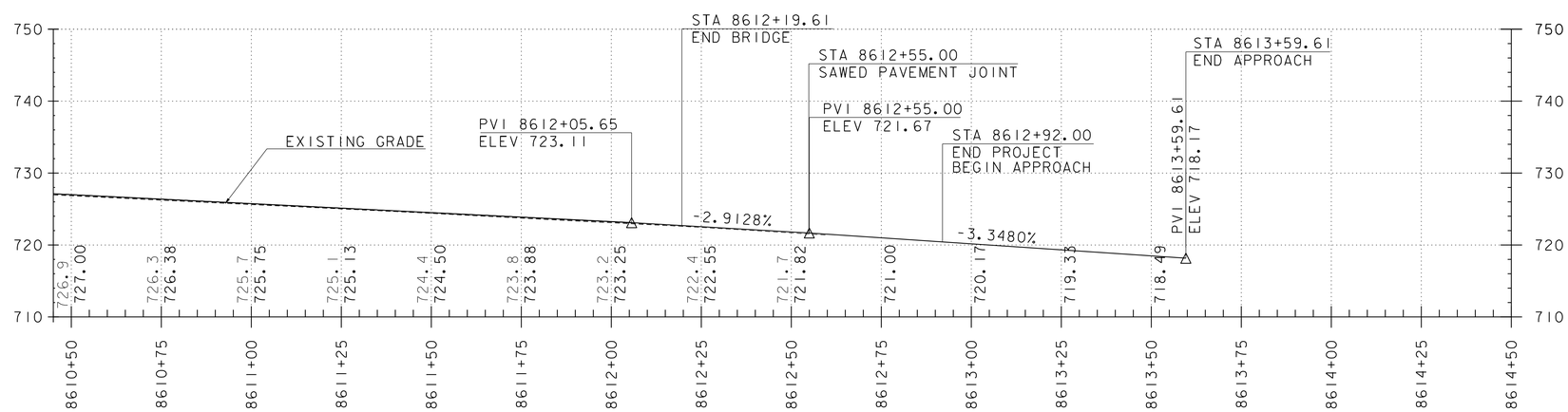

NOTES

1. STATIONS AND ELEVATIONS ARE IN FEET.
2. THE ELEVATIONS SHOWN TO THE NEAREST TENTH ARE THE EXISTING GROUND ALONG THE CENTERLINE.
3. THE ELEVATIONS SHOWN TO THE NEAREST HUNDRETH ARE THE FINISHED GRADE ALONG THE CENTERLINE.
4. PROPOSED PROFILE SHOWN IS FOR INFORMATIONAL PURPOSES ONLY. FINAL FINISHED GRADE SHALL BE DETERMINED BY VTRANS AFTER EXISTING TOP OF DECK AND TOP OF BEAM ELEVATIONS ARE SURVEYED. SEE NOTE 20 ON SHEET 3.

I-91 PROFILE

HOR. SCALE 1" = 40'-0"
VER. SCLAE 1" = 20'-0"

CONSULTING ENGINEERS

PROJECT NAME: IRASBURG	
PROJECT NUMBER: IM DECK(46)	
FILE NAME: z15all6pro-107N.dgn	PLOT DATE: 12/4/2015
PROJECT LEADER: J. BYATT	DRAWN BY: J. FOWLER
DESIGNED BY: L. GREER	CHECKED BY: S. FORTIER
PROFILE SHEET	SHEET 10 OF 45

CLD 15-0223 MODEL: Profile

TRAFFIC CONTROL

1. THE TRAFFIC CONTROL PLANS SHOWN ON TRAFFIC CONTROL SHEETS 2 AND 3 AND THE PHASING SECTIONS ON SHEETS 15 AND 16 ARE SCHEMATICS ONLY AND SHOULD BE USED AS REFERENCES. AS PART OF 900.645, "SPECIAL PROVISION (TRAFFIC CONTROL, ALL INCLUSIVE)", THE CONTRACTOR SHALL SUBMIT A SITE SPECIFIC TRAFFIC CONTROL PLAN DEPICTING EACH PHASE OF THE PLANNED WORK. PLANS SHALL BE SUBMITTED FOR APPROVAL IN ACCORDANCE WITH SUBSECTION 105.03 AND SHALL BE STAMPED BY A PROFESSIONAL ENGINEER LICENSED IN AN APPROPRIATE DISCIPLINE IN THE STATE OF VERMONT. THE PLAN SHALL INCLUDE A LAYOUT SHOWING ALL ON- AND OFF-PROJECT SIGNS AND BARRICADES, DETAILS FOR LANE CLOSURES, AND ANY OTHER DETAILS ASSOCIATED WITH THE TRAFFIC CONTROL.

2. ALL ITEMS REQUIRED TO PREPARE, SUBMIT, AND IMPLEMENT THE CONTRACTOR'S PLAN, INCLUDING ANY NECESSARY REVISIONS TO THE PLAN, WILL BE INCLUDED IN THE UNIT BID PRICE FOR ITEM 900.645, "SPECIAL PROVISION (TRAFFIC CONTROL, ALL-INCLUSIVE)". THIS INCLUDES, BUT IS NOT LIMITED TO, THE FOLLOWING:

   TRAFFIC CONTROL PLAN
   TEMPORARY TRAFFIC BARRIER
   UNIFORMED TRAFFIC OFFICERS/FLAGGERS
   BARRICADES
   DRUMS/CONES
   ON PROJECT CONSTRUCTION SIGNING
   TEMPORARY PAVEMENT MARKINGS
   PORTABLE CHANGEABLE MESSAGE BOARDS
   PORTABLE ARROW BOARDS
   ATTENUATORS

   THE CONTRACTOR SHALL ALLOW TWO WEEKS FOR APPROVAL OF THE TRAFFIC CONTROL PLAN. NO WORK SHALL COMMENCE UNTIL THE CONTRACTOR HAS AN APPROVED TRAFFIC CONTROL PLAN.

3. THE EXISTING SPEED LIMIT IS 65 MPH. THE SPEED LIMIT WILL BE REDUCED TO 55 MPH IN THE WORK ZONE FOR THIS PROJECT. ANY EXISTING SPEED LIMIT SIGNS WITHIN THE SPEED REDUCTION AREA SHALL BE COMPLETELY COVERED.

4. CONSTRUCTION SIGNS SHALL BE INSTALLED SO AS NOT TO OBSTRUCT EXISTING SIGNS.

5. ALL SIGNS SHALL BE IN ACCORDANCE WITH THE CURRENT EDITIONS OF THE "MANUAL ON UNIFORM TRAFFIC CONTROL DEVICES" (MUTCD) AND THE "STANDARD HIGHWAY SIGNS AND MARKINGS" BOOK (SHSM) PUBLISHED BY THE FEDERAL HIGHWAY ADMINISTRATION (FHWA).

6. SOLID SUBSTRATE CONSTRUCTION SIGNS SHALL HAVE RETROREFLECTIVE SHEETING EQUAL TO OR EXCEEDING "AMERICAN SOCIETY FOR TESTING AND MATERIALS" (ASTM D 4956) TYPE VII, VIII OR IX REQUIREMENTS, UNLESS OTHERWISE NOTED. BLACK AND WHITE REGULATORY SIGNS SHALL BE A MINIMUM OF TYPE III, UNLESS OTHERWISE NOTED.

7. ROLL UP SIGNS SHALL HAVE RETROREFLECTIVE SHEETING EQUAL TO OR EXCEEDING ASTM D 4956 TYPE VI.

8. CONSTRUCTION SIGNS SHALL BE ERECTED BEFORE THE START OF ANY WORK AND SHALL BE COVERED UNTIL WORK COMMENCES, DURING PERIODS OF INACTIVITY OR UPON COMPLETION OF THE WORK. EACH SIGN SHALL BE ERECTED IN A NEAT AND WORKMANLIKE MANNER. SIGNS SHALL BE REMOVED UPON COMPLETION OF THE WORK AT THE DISCRETION OF THE ENGINEER.

9. FIXED SIGNS SHALL BE SET SECURELY IN THE GROUND. THE BOTTOM OF A SIGN SHALL BE AT LEAST SEVEN FEET ABOVE THE EDGE OF PAVEMENT. THE NEAREST EDGE OF A SIGN SHALL BE AT LEAST SIX FEET OUTSIDE THE SHOULDER POINT OR FOUR FEET OUTSIDE GUARDRAIL.

10. PORTABLE SIGNS SHALL BE PLACED ON THE EDGE OF ROADWAY AND ONE FOOT MINIMUM ABOVE TRAVELED WAY. ALL VEGETATION THAT INTERFERES WITH VISIBILITY OF THE SIGNS SHALL BE REMOVED AT THE CONTRACTOR'S EXPENSE. WHEN PLACED BEHIND GUARDRAIL, THE BOTTOM OF THE SIGN FACE SHALL BE ABOVE THE TOP OF THE GUARDRAIL.

TRAFFIC CONTROL (CONTINUED)

11. WHERE SIGN INSTALLATIONS ARE NOT PROTECTED BY GUARDRAIL OR OTHER APPROVED TRAFFIC BARRIERS, ALL SIGN STANDS AND POST INSTALLATIONS SHALL BE "NATIONAL COOPERATIVE HIGHWAY RESEARCH PROGRAM" (NCHRP) REPORT 350 COMPLIANT. NO SIGN POSTS SHALL EXTEND OVER THE TOP OF THE SIGN INSTALLED ON SAID POST(S). WHEN ANCHORS ARE INSTALLED, STUB SHALL NOT BE GREATER THAN FOUR INCHES ABOVE EXISTING GROUND.

12. THE CONTRACTOR SHALL HAVE SIGNS FOR CLOSURE OF RIGHT AND LEFT LANES ON PROJECT BEFORE WORK COMMENCES.

13. THE TRAFFIC CONTROL CONFIGURATIONS SHOWN ON TRAFFIC CONTROL SHEET 2 MAY BE UTILIZED FOR ALL WORK REQUIRING A LANE CLOSURE OF 3 DAYS OR LESS SUCH AS MEMBRANE AND PAVING OPERATIONS THAT DO NOT REQUIRE OPEN DECK WORK. ANY WORK REQUIRING A LANE CLOSURE LONGER THAN 3 DAYS OR INCLUDES OPEN DECK WORK SUCH AS DECK REMOVAL AND REPLACEMENT OPERATIONS SHALL UTILIZE THE TRAFFIC CONTROL CONFIGURATIONS SHOWN ON TRAFFIC CONTROL SHEET 3.

14. CHANNELIZING DEVICES OTHER THAN RETROREFLECTIVE PLASTIC DRUMS SHALL BE ALLOWED ALONG THE BUFFER SPACE AND WORK AREA FOR MEMBRANE AND PAVING OPERATIONS ONLY. THE TYPE OF DEVICE SHALL BE CONSISTENT THROUGHOUT THE BUFFER SPACE AND WORK AREA AND SHALL REMAIN STABLE WHILE UNATTENDED.

15. THE NUMBER OF CHANNELIZING DEVICES, TYPE III BARRICADE AND OTHER TRAFFIC CONTROL DEVICES SHOWN ARE FOR ILLUSTRATIVE PURPOSES ONLY. THE ACTUAL NUMBER REQUIRED ARE TO BE DETERMINED BASED ON INDIVIDUAL DETOUR CONDITIONS (TAPERS, SPEED LIMITS, LENGTH OF DETOUR, CURVE, ETC.). WARNING LIGHTS SHALL NOT BE USED ON CHANNELIZING DEVICES.

16. PLACE LAST CHANNELIZING DEVICE 100 FEET BEYOND THE ANTICIPATED WORK ZONE TERMINAL POINT EACH DAY FOR MEMBRANE AND PAVING OPERATIONS ONLY.

17. THE ARROW PANEL SHALL BE PLACED ON THE SHOULDER OF THE ROADWAY AS CLOSE AS PRACTICAL TO THE BEGINNING OF THE MERGING TAPER.

18. THE PORTABLE CHANGEABLE MESSAGE SIGNS (PCMS) SHALL BE USED AT THE DISCRETION OF THE ENGINEER AND SHALL BE PAID FOR UNDER ITEM 900.645, "SPECIAL PROVISION (TRAFFIC CONTROL, ALL-INCLUSIVE)". THE PCMS SHALL BE USED IN ACCORDANCE WITH SECTION 6F.60 OF THE MUTCD. THE PCMS SHALL READ "LEFT (OR RIGHT) LANE CLOSED AHEAD, PLEASE MERGE EARLY".

19. TRAVEL LANE SHALL BE A MINIMUM OF 12 FEET WIDE.

20. DURING MEMBRANE AND PAVING OPERATIONS, THE CONTRACTOR SHALL REDUCE TRAFFIC TO ONE LANE DURING WORKING HOURS IN ACCORDANCE WITH THIS SHEET. ALL EQUIPMENT SHALL BE MOVED TO A LOCATION OFF PAVED SHOULDERS AND OUTSIDE THE CLEAR ZONE (MINIMUM 30 FEET) DURING NON-WORK PERIODS AND PROTECTED BY BARRELS OR CONES, UNLESS PROTECTED BY TRAFFIC BARRIER OR GUARDRAIL.

21. AT THE DISCRETION OF THE ENGINEER, MERGING TAPER, BUFFER SPACE, AND TANGENT LENGTHS MAY BE EXTENDED BEYOND MINIMUM VALUES, ESPECIALLY IN CLOSE PROXIMITY TO INTERCHANGE RAMPS, CURVES, OR OTHER INFLUENCING FACTORS.

22. EXTEND MERGING TAPER TO ACCOUNT FOR REQUIRED LANE SHIFT OFFSET.

23. PROVIDE MERGING TAPER LENGTH AS REQUIRED FOR LANE SHIFT.

TEMPORARY TRAFFIC BARRIER

24. TEMPORARY TRAFFIC BARRIER SHALL BE A CONCRETE MEDIAN BARRIER (CMB) TYPE. STEEL BEAM GUARDRAIL WILL NOT BE ALLOWED FOR USE AS A TEMPORARY TRAFFIC BARRIER. PLACEMENT OF CMBs AND REMOVING AND RESETTING CMBs WILL BE PAID FOR UNDER ITEM 900.645, "SPECIAL PROVISION (TRAFFIC CONTROL, ALL-INCLUSIVE)".

25. THE END OF THE BARRIER FACING APPROACHING TRAFFIC SHALL MEET THE FOLLOWING REQUIREMENTS.

TEMPORARY TRAFFIC BARRIER (CONTINUED)

   A. WHEN NO GUARDRAIL IS PRESENT, A 30' OFFSET SHALL BE USED FROM THE EDGE OF TRAVELED WAY. IF A 30' OFFSET IS NOT ATTAINABLE, THEN AN ENERGY ABSORPTION ATTENUATOR SHALL BE LOCATED AT THE END OF THE BARRIER.

   B. IF GUARDRAIL IS PRESENT, THEN TEMPORARY CONCRETE TRAFFIC BARRIER SHALL BE CONNECTED TO EXISTING GUARDRAIL (COST INCIDENTAL TO ITEM 900.645, "SPECIAL PROVISION (TRAFFIC CONTROL, ALL-INCLUSIVE)".) (COSTS FOR DISMANTLING BARRIER CONNECTION AND RESTORING EXISTING BARRIER TO ORIGINAL CONFIGURATION SHALL BE INCIDENTAL TO ITEM 900.645, "SPECIAL PROVISION (TRAFFIC CONTROL, ALL-INCLUSIVE)".) SEE BARRIER RAIL DETAILS ON SHEET 14. AN ENERGY ABSPORTION ATTENUATOR SHALL BE LOCATED AT THE END OF THE BARRIER.

26. THE QUANTITIES INCLUDE THREE ENERGY ABSORPTION ATTENUATORS, WHICH INCLUDES ONE BACKUP ATTENUATOR TO BE USED IN THE EVENT AN IN-SERVICE ATTENUATOR IS DAMAGED AND NEEDS TO BE REPLACED. THE COST FOR THE ATTENUATORS AND TO MOVE ATTENUATORS FOR SHIFTING LANE CLOSURES SHALL BE PAID FOR UNDER ITEM 900.645, "SPECIAL PROVISION (TRAFFIC CONTROL, ALL-INCLUSIVE)". THE COST FOR ENERGY ABSORPTION ATTENUATORS USED FOR ANY OTHER TRAFFIC CONTROL SETUP SHALL BE INCIDENTAL TO ITEM 900.645, "SPECIAL PROVISION (TRAFFIC CONTROL, ALL-INCLUSIVE)".

27. TEMPORARY TAPE EDGELINES SHALL BE APPLIED AND SHALL MAINTAIN A ONE FOOT MINIMUM DISTANCE FROM THE BARRIER WITH TWO FEET BEING DESIRABLE. ALL TEMPORARY TAPE EDGE LINES AND PAVEMENT MARKING MASKS SHALL BE PAID FOR UNDER ITEM 900.645, "SPECIAL PROVISION (TRAFFIC CONTROL, ALL-INCLUSIVE)".

28. THE RAISED PAVEMENT MARKERS (RPM'S), TYPE II SHALL BE PLACED TO THE OUTSIDE OF THE TEMPORARY TAPE PAVEMENT MARKINGS. THE RPM'S SHALL BE SPACED AT 20 FEET AND SHALL BE PAID FOR UNDER ITEM 900.645, "SPECIAL PROVISION (TRAFFIC CONTROL, ALL-INCLUSIVE)".

29. DASHED LINE REMOVAL SHALL BEGIN 750 FEET IN ADVANCE OF THE BEGINNING OF THE SHOULDER TAPER FOR TRAFFIC CONTROL WITH TEMPORARY BARRIER PROTECTION.

TEMPORARY TRAFFIC BARRIER ANCHORED TO DECK

30. TEMPORARY CONCRETE TRAFFIC BARRIER ANCHORED TO DECK SHALL BE REQUIRED DURING BRIDGE DECK CONSTRUCTION OPERATIONS AS SHOWN ON PHASING SECTIONS SHEETS 15 AND 16. ALL TEMPORARY CONCRETE TRAFFIC BARRIERS ANCHORED TO DECK SHALL BE BOLTED WITH HIGH STRENGTH BOLTS IN FIELD DRILLED RESIN GROUTED HOLES. THROUGH BOLTING IS NOT PERMITTED IN THE NEW DECK. THE COST FOR INSTALLING, REMOVING, AND PATCHING ANCHOR BOLT HOLES FOR TEMPORARY TRAFFIC BARRIER ANCHORED TO DECK WILL BE CONSIDERED INCIDENTAL TO ITEM 900.645, "SPECIAL PROVISION (TRAFFIC CONTROL, ALL-INCLUSIVE).

31. THE EXACT LAYOUT OF THE BOLTS SHALL BE DETERMINED FROM MEASUREMENT OF THE BARRIER ONSITE.

32. THE METHOD OF FASTENING THE TEMPORARY TRAFFIC BARRIER TO THE DECK SHALL BE SUBMITTED TO THE ENGINEER FOR APPROVAL WITH DESIGN CALCULATIONS, CRASH TEST RESULTS, AND DETAILS STAMPED BY A PROFESSIONAL ENGINEER LICENSED IN THE STATE OF VERMONT.

33. REMOVABLE ANCHOR BOLTS SHALL BE BONDED WITH RESIN ADHESIVE IN HOLES DRILLED IN THE EXISTING OR PROPOSED DECK. THE RESIN BONDED ADHESIVE ANCHORING SYSTEM SHALL BE CRASH TESTED FOR A MINIMUM TL-3 RATING. THE BOLT HOLE DIAMETER SHALL BE DETERMINED BY THE MANUFACTURER OF THE ANCHORING SYSTEM. FILL HOLES WITH EPOXY GROUT AFTER REMOVAL OF THE TEMPORARY TRAFFIC BARRIER FROM THE NEW DECK.

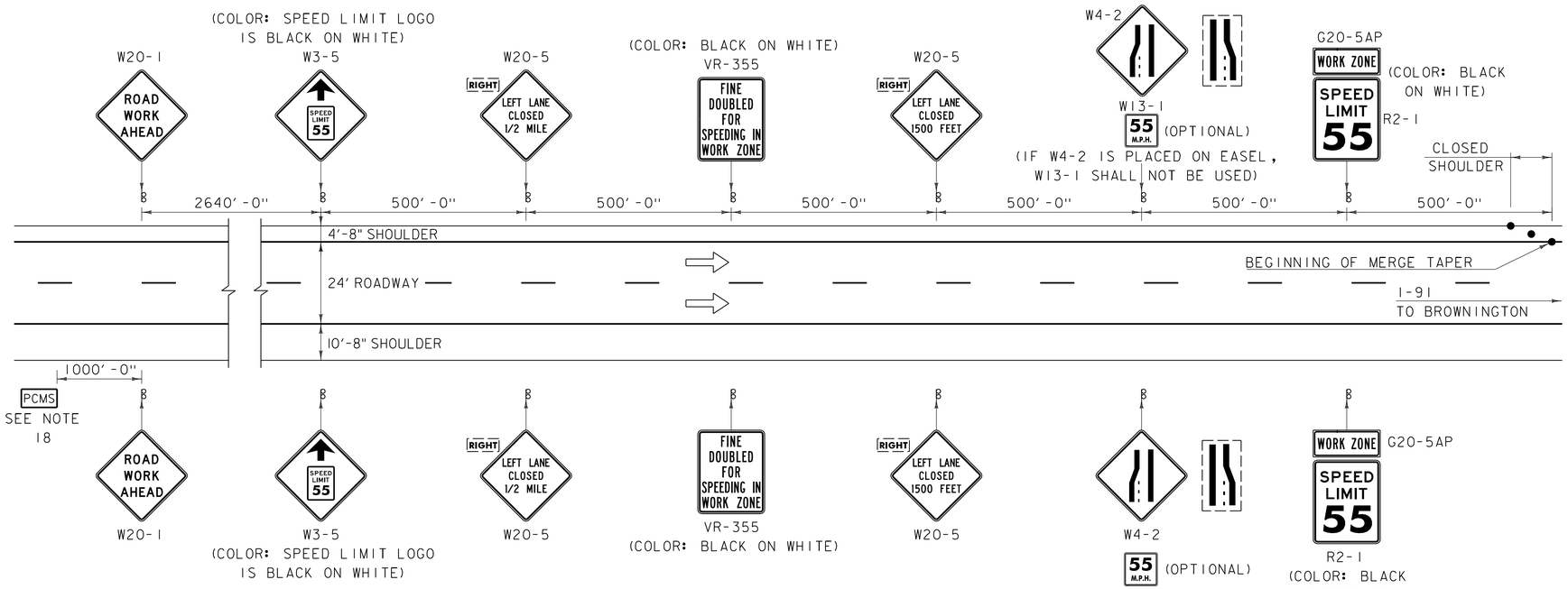

CONSTRUCTION APPROACH SIGNING ON I-91

(LEFT LANE CLOSED, RIGHT LANE SIMILAR)

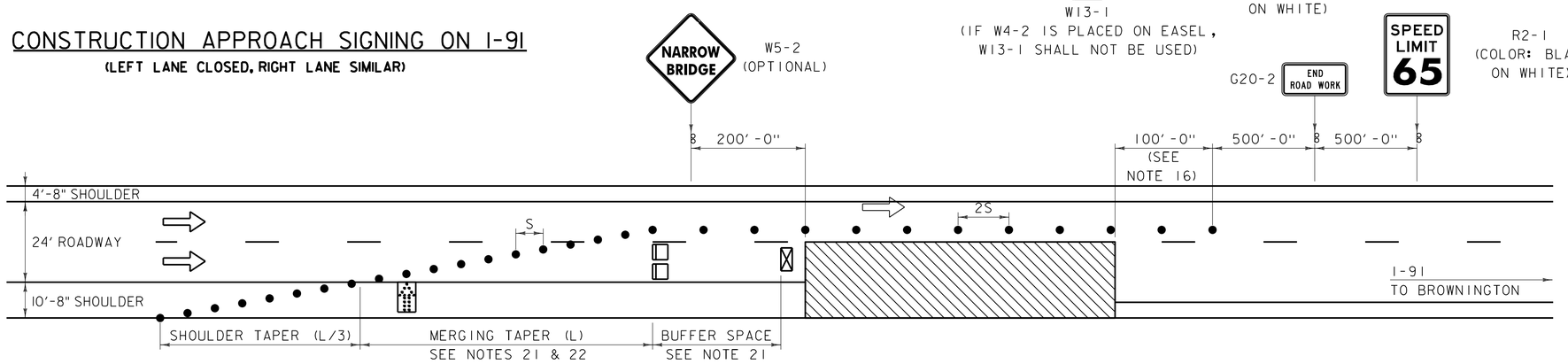

TRAFFIC CONTROL ON I-91 RIGHT LANE CLOSED

(SEE NOTE 13)

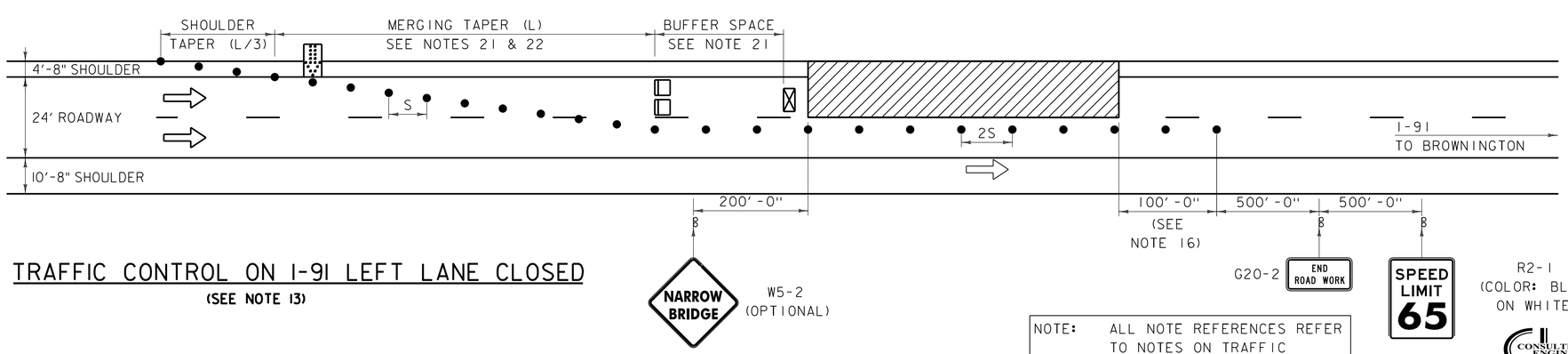

TRAFFIC CONTROL ON I-91 LEFT LANE CLOSED

(SEE NOTE 13)

POSTED SPEED (MPH)	TAPER LENGTHS (FT) SHOULDER W=10 FT (L/3)	TAPER LENGTHS (FT) MERGING 12 FT LANE* (L)	TANGENT W=12 FT (L/2)	BARRIER FLARE RATE (MIN.)	MIN. BUFFER SPACE LENGTH (FT)	MAXIMUM CHANNELIZING DEVICE SPACING (FT) TAPER (S)	MAXIMUM CHANNELIZING DEVICE SPACING (FT) TANGENT (2S)
≤40	90	320	160	1:9	305	40	80
45	150	540	270	1:9	360	45	90
50	170	600	300	1:11	425	50	100
55	185	660	330	1:13	495	55	110
60	200	720	360	1:13	570	60	120
65	215	780	390	1:13	645	65	130

* SEE NOTE 22.

TAPER RATES ARE DETERMINED USING THE FOLLOWING EQUATION:

$L = WS$ FOR POSTED SPEEDS OF 45 MPH OR GREATER

$L = WS^2/60$ FOR POSTED SPEEDS OF 40 MPH OR LESS

L = MINIMUM LENGTH OF TAPER
W = WIDTH OF OFFSET IN FEET. (TYPICAL)
S = POSTED SPEED IN MPH

LEGEND

- FLOW OF TRAFFIC
- RETROREFLECTIVE PLASTIC DRUM
- PORTABLE ARROW BOARD
- TYPE III BARRICADE
- WORK AREA
- TRUCK-MOUNTED ATTENUATOR
- PCMS — PORTABLE CHANGEABLE MESSAGE SIGN (SEE NOTE 18)

NOTE: ALL NOTE REFERENCES REFER TO NOTES ON TRAFFIC CONTROL SHEET 1.

CONSULTING ENGINEERS

PROJECT NAME: IRASBURG
PROJECT NUMBER: IM DECK(46)

FILE NAME: z15all6tcp-107N.dgn
PROJECT LEADER: J. BYATT
DESIGNED BY: S. BEAUMONT
TRAFFIC CONTROL SHEET 2

PLOT DATE: 12/4/2015
DRAWN BY: S. BEAUMONT
CHECKED BY: L. GREER
SHEET 12 OF 45

MODEL: TCP2
CLD 15-0223

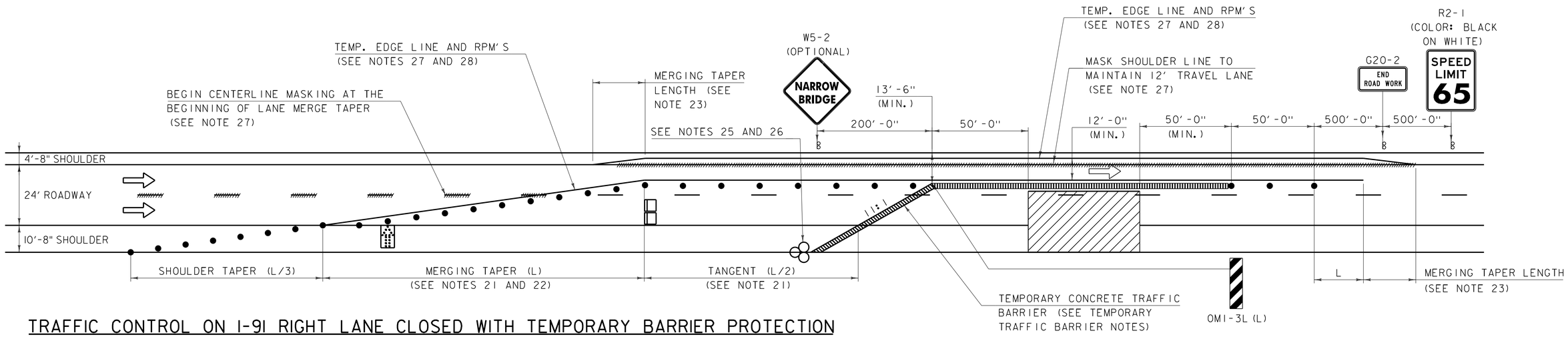

TRAFFIC CONTROL ON I-91 RIGHT LANE CLOSED WITH TEMPORARY BARRIER PROTECTION

(SEE NOTE 13)

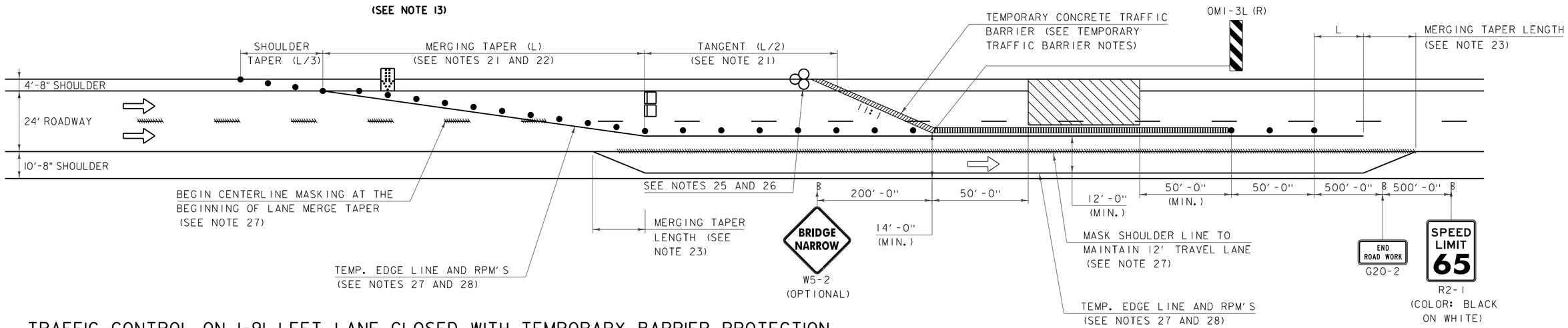

TRAFFIC CONTROL ON I-91 LEFT LANE CLOSED WITH TEMPORARY BARRIER PROTECTION

(SEE NOTE 131)

POSTED SPEED (MPH)	TAPER LENGTHS (FT) SHOULDER W=10 FT (L/3)	TAPER LENGTHS (FT) MERGING 12 FT LANE* (L)	TANGENT W=12 FT (L/2)	BARRIER FLARE RATE (MIN.)	MIN. BUFFER SPACE LENGTH (FT)	MAXIMUM CHANNELIZING DEVICE SPACING (FT) TAPER (S)	MAXIMUM CHANNELIZING DEVICE SPACING (FT) TANGENT (2S)
≤40	90	320	160	1:9	305	40	80
45	150	540	270	1:9	360	45	90
50	170	600	300	1:11	425	50	100
55	185	660	330	1:13	495	55	110
60	200	720	360	1:13	570	60	120
65	215	780	390	1:13	645	65	130

* SEE NOTE 22.

TAPER RATES ARE DETERMINED USING THE FOLLOWING EQUATION:

$L = WS$ FOR POSTED SPEEDS OF 45 MPH OR GREATER

$L = WS^2/60$ FOR POSTED SPEEDS OF 40 MPH OR LESS

L = MINIMUM LENGTH OF TAPER
W = WIDTH OF OFFSET IN FEET. (TYPICAL)
S = POSTED SPEED IN MPH

LEGEND

- FLOW OF TRAFFIC
- RETROREFLECTIVE PLASTIC DRUM
- PORTABLE ARROW BOARD
- TYPE III BARRICADE
- WORK AREA
- TRUCK-MOUNTED ATTENUATOR
- PCMS — PORTABLE CHANGEABLE MESSAGE SIGN (SEE NOTE 18)
- ENERGY ABSORPTION ATTENUATOR

NOTE: ALL NOTE REFERENCES REFER TO NOTES ON TRAFFIC CONTROL SHEET 1.

PROJECT NAME: IRASBURG
PROJECT NUMBER: IM DECK(46)

FILE NAME: z15all6tcp-107N.dgn
PROJECT LEADER: J. BYATT
DESIGNED BY: S. BEAUMONT
TRAFFIC CONTROL SHEET 3

PLOT DATE: 12/4/2015
DRAWN BY: S. BEAUMONT
CHECKED BY: L. GREER
SHEET 13 OF 45

CONSULTING ENGINEERS

MODEL: TCP3
CLD 15-0223

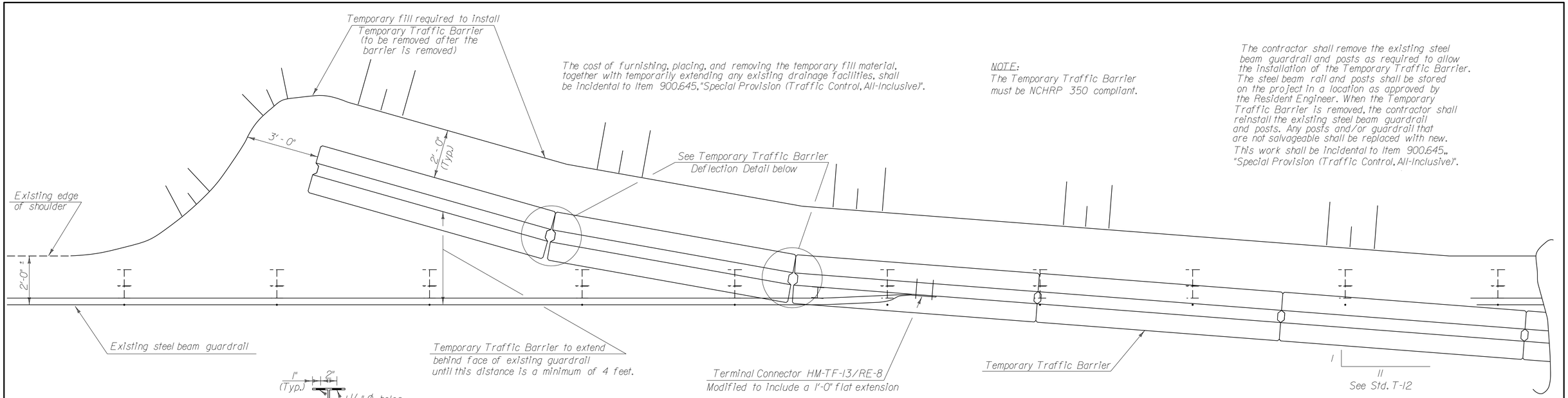

PLAN VIEW SHOWING POSITIVE CONNECTION BETWEEN TEMPORARY TRAFFIC BARRIER AND EXISTING GUARDRAIL

NTS

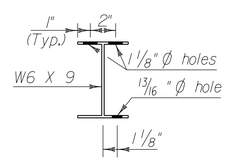

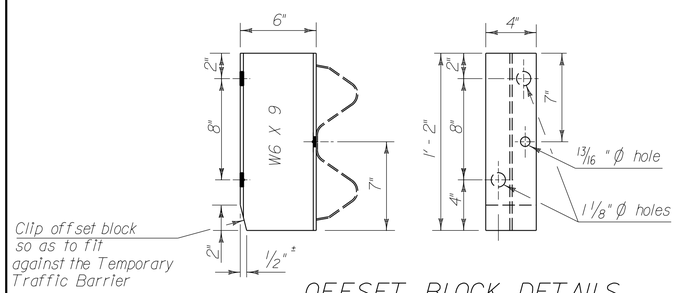

OFFSET BLOCK DETAILS

NTS

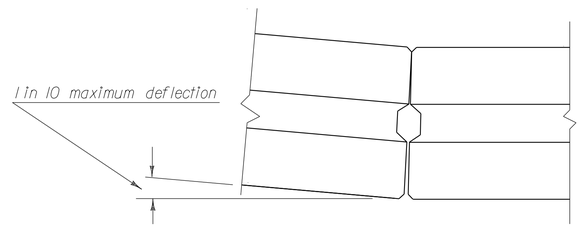

TEMPORARY TRAFFIC BARRIER DEFLECTION DETAIL

NTS

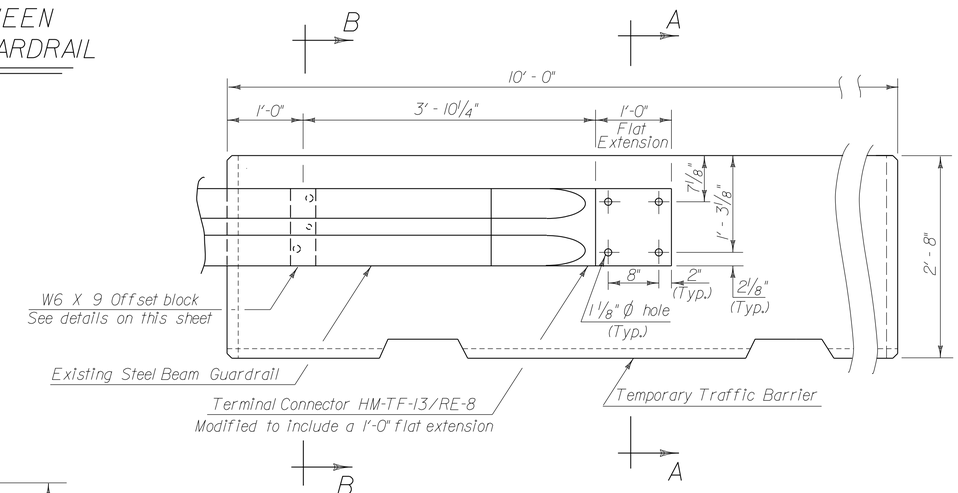

ELEVATION VIEW SHOWING POSITIVE CONNECTION BETWEEN TEMPORARY TRAFFIC BARRIER AND EXISTING GUARDRAIL

NTS

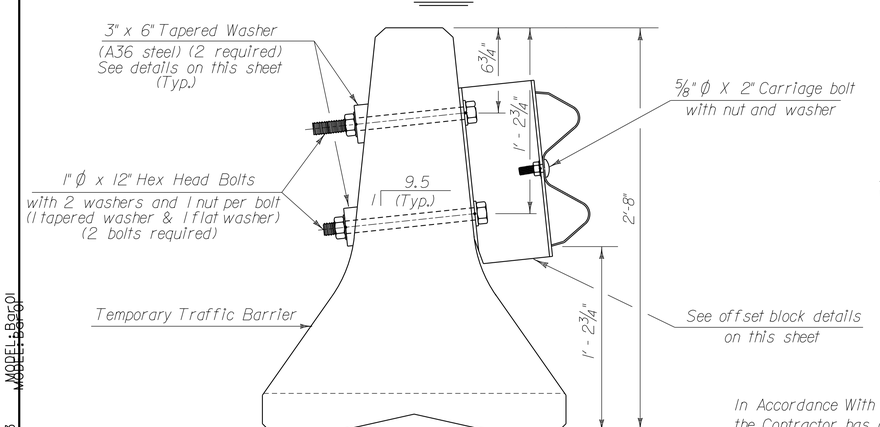

SECTION B-B

In Accordance With Section 621, the Contractor has options in barrier selection

NTS

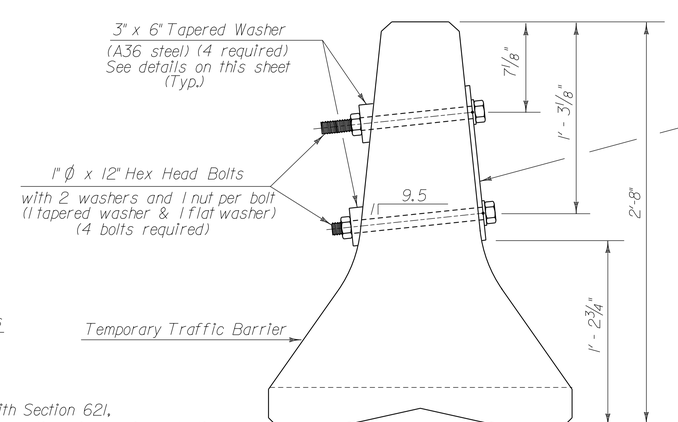

SECTION A-A

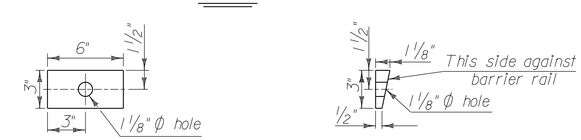

TAPERED WASHER DETAILS

NTS

PROJECT NAME: IRASBURG	
PROJECT NUMBER: IM DECK(46)	
FILE NAME: z15all6-barrier.dgn	PLOT DATE: 12/4/2015
PROJECT LEADER: J. BYATT	DRAWN BY: M. SMITH
DESIGNED BY: S. BEAUMONT	CHECKED BY: J. BYATT
TRAFFIC CONTROL BARRIER SHEET	SHEET 14 OF 45

CONSULTING ENGINEERS

CLD/J5-0233 MODEL:Bar01

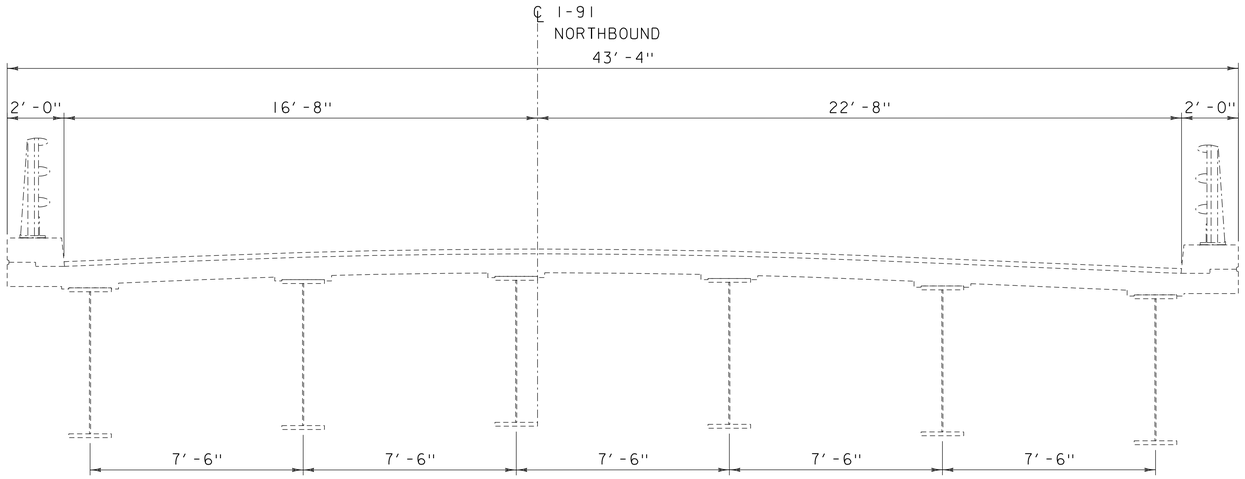

EXISTING TYPICAL BRIDGE SECTION

SCALE: 3/8" = 1'-0"

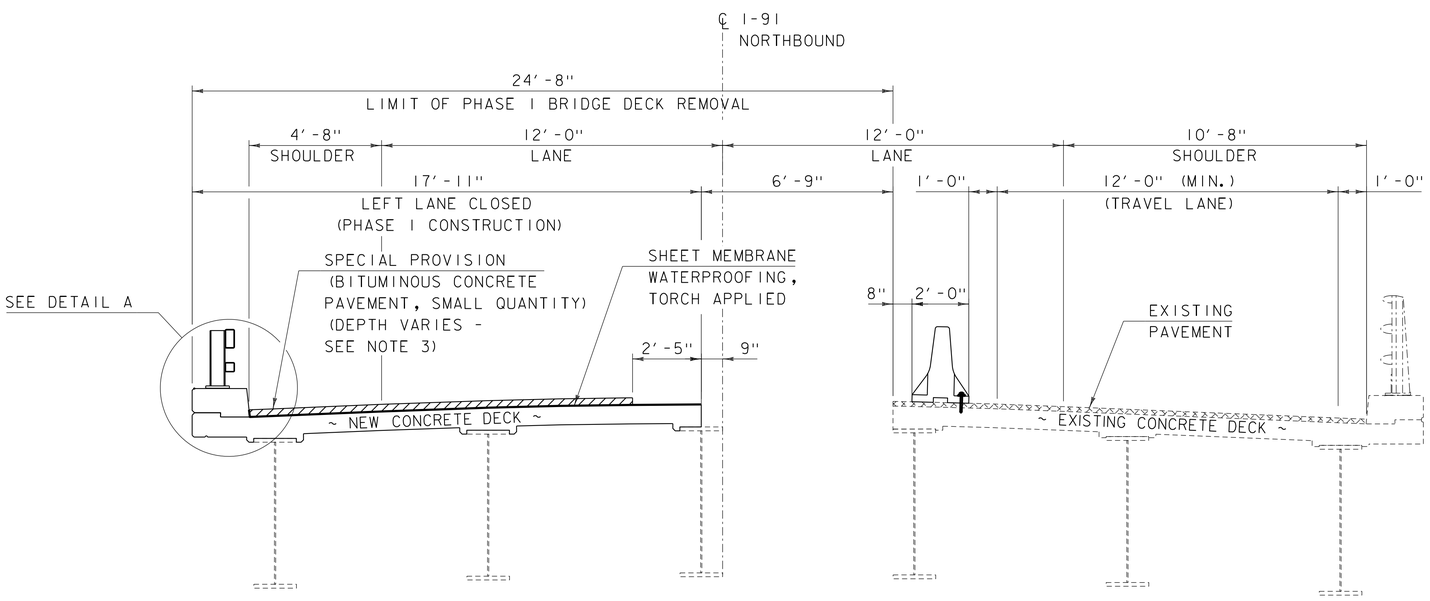

PHASE 1

(SPANS 2 THROUGH 4 SHOWN, SPAN 1 SIMILAR)
SCALE: 3/8" = 1'-0"

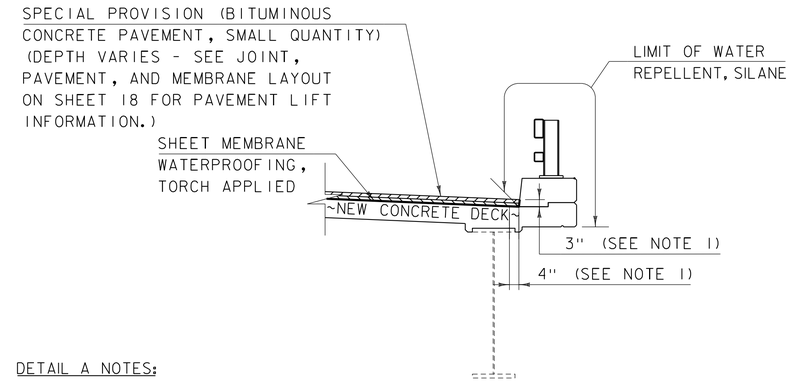

DETAIL A NOTES:

1. INDICATES AREA ALONG DECK AND UP FACE OF CURB FOR PLACEMENT OF TWO COATS OF POLYURETHANE MEMBRANE.
2. POLYURETHANE MEMBRANE AND BLAST CLEANING SHALL BE INCLUDED IN THE UNIT PRICE BID FOR SHEET MEMBRANE WATERPROOFING, TORCH APPLIED.
3. SHEET MEMBRANE WATERPROOFING SHALL EXTEND TO FACE OF CURB AS SHOWN.
4. IN ADDITION TO THE REQUIREMENTS OF SUBSECTION 519.04, BLAST CLEAN 3" UP THE FACE OF CURB PRIOR TO PLACING THE MEMBRANE.

DETAIL A

SCALE: 3/8" = 1'-0"

NOTES:

1. TEMPORARY CONCRETE TRAFFIC BARRIER SHALL BE REQUIRED DURING BRIDGE DECK CONSTRUCTION OPERATIONS. CHANNELIZING DEVICES SUCH AS RETROREFLECTIVE PLASTIC DRUMS MAY BE UTILIZED DURING PAVING AND MEMBRANE OPERATIONS. SEE TRAFFIC CONTROL NOTES ON TRAFFIC CONTROL SHEET 1.
2. PLACEMENT OF THE MEMBRANE SHALL START AT THE LOW SIDE OF THE BRIDGE. THE SPLICE SHALL BE AS SHOWN IN THE DETAILS ON THIS PAGE WITH THE HIGH SIDE OVERLAPPING THE LOW SIDE.
3. SEE JOINT, PAVEMENT, AND MEMBRANE LAYOUT ON SHEET 18 FOR PAVEMENT LIFT INFORMATION.

PROJECT NAME: IRASBURG	
PROJECT NUMBER: IM DECK(46)	
FILE NAME: z15a116tcp-107N.dgn	PLOT DATE: 12/4/2015
PROJECT LEADER: J. BYATT	DRAWN BY: M. SMITH
DESIGNED BY: J. FRENCH	CHECKED BY: S. BEAUMONT
PHASING SECTIONS SHEET 1	SHEET 15 OF 45

CONSULTING ENGINEERS

CLD 15-0223 MODEL: PHASING1

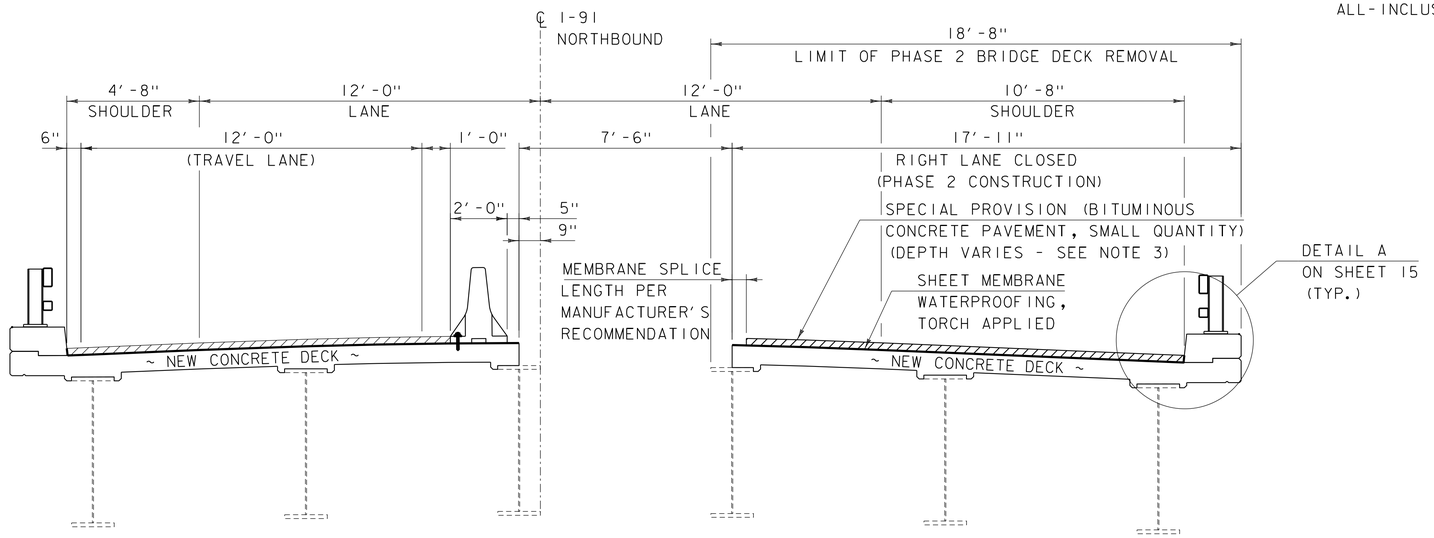

PHASE 2

(SPANS 2 THROUGH 4 SHOWN, SPAN 1 SIMILAR)
SCALE: 3/8" = 1'-0"

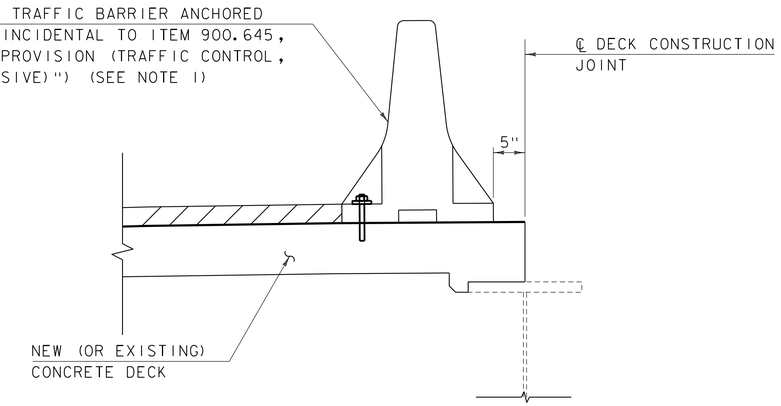

BARRIER ANCHOR DETAIL

SCALE: 1" = 1'-0"

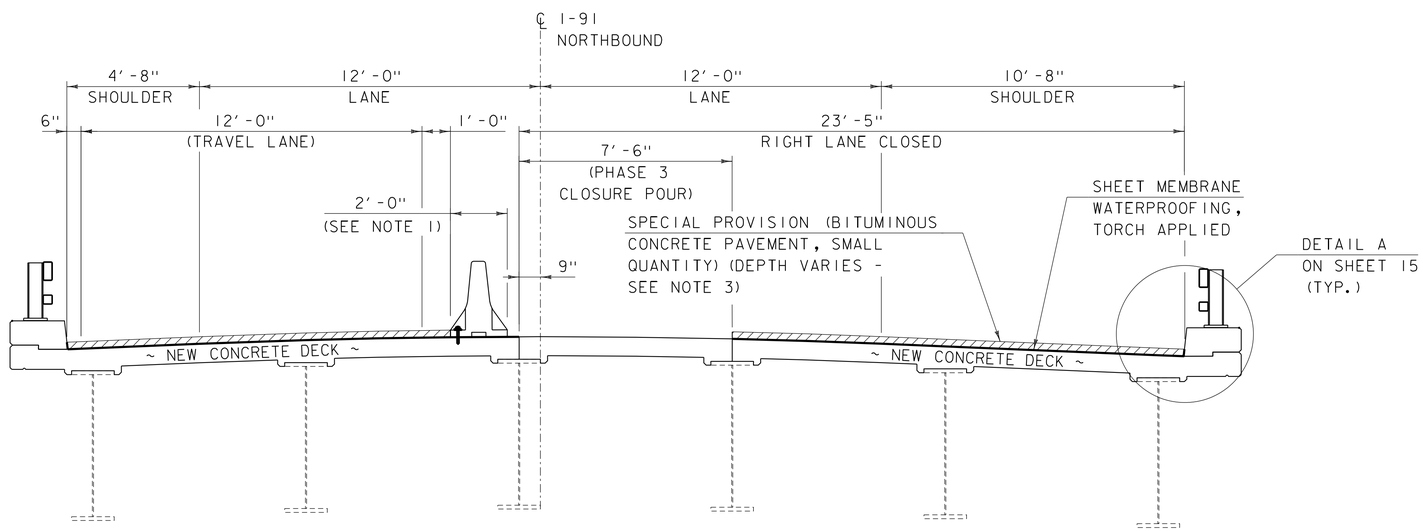

PHASE 3

(SPANS 2 THROUGH 4 SHOWN, SPAN 1 SIMILAR)
SCALE: 3/8" = 1'-0"

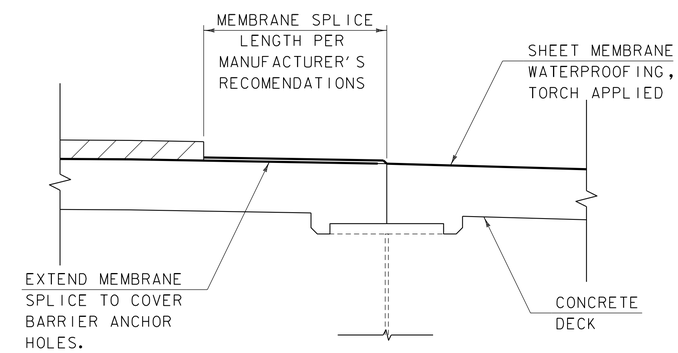

MEMBRANE OVERLAP DETAIL

SCALE: 1" = 1'-0"

NOTES:

1. SEE TRAFFIC CONTROL SHEET 1 FOR TEMPORARY TRAFFIC BARRIER ANCHORED TO DECK NOTES.
2. PLACEMENT OF THE MEMBRANE SHALL START AT THE LOW SIDE OF THE BRIDGE. THE SPLICE SHALL BE AS SHOWN IN THE DETAILS ON THIS PAGE WITH THE HIGH SIDE OVERLAPPING THE LOW SIDE.
3. SEE JOINT, PAVEMENT, AND MEMBRANE LAYOUT ON SHEET 18 FOR PAVEMENT LIFT INFORMATION.
4. AFTER PHASE 3 IS COMPLETE, SHIFT TRAFFIC TO THE RIGHT LANE, REMOVE ANCHORED TEMPORARY TRAFFIC BARRIER, FILL ANCHOR BOLT HOLES, AND COMPLETE MEMBRANE AND PAVING OPERATIONS.

PROJECT NAME: IRASBURG	
PROJECT NUMBER: IM DECK(46)	
FILE NAME: z15all6tcp-107N.dgn	PLOT DATE: 12/4/2015
PROJECT LEADER: J. BYATT	DRAWN BY: M. SMITH
DESIGNED BY: J. FRENCH	CHECKED BY: S. BEAUMONT
PHASING SECTIONS SHEET 2	SHEET 16 OF 45

CLD CONSULTING ENGINEERS

CLD 15-0223 MODEL: PHASING2

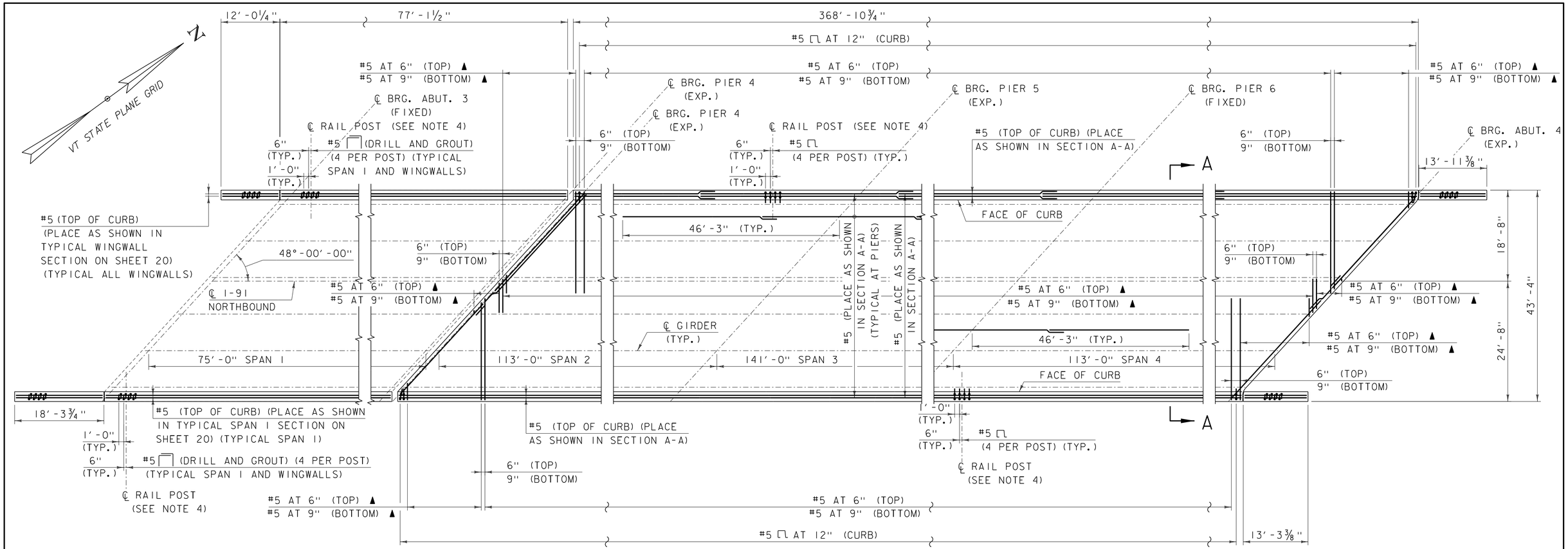

DECK REINFORCEMENT PLAN

SCALE: 1" = 10'-0"

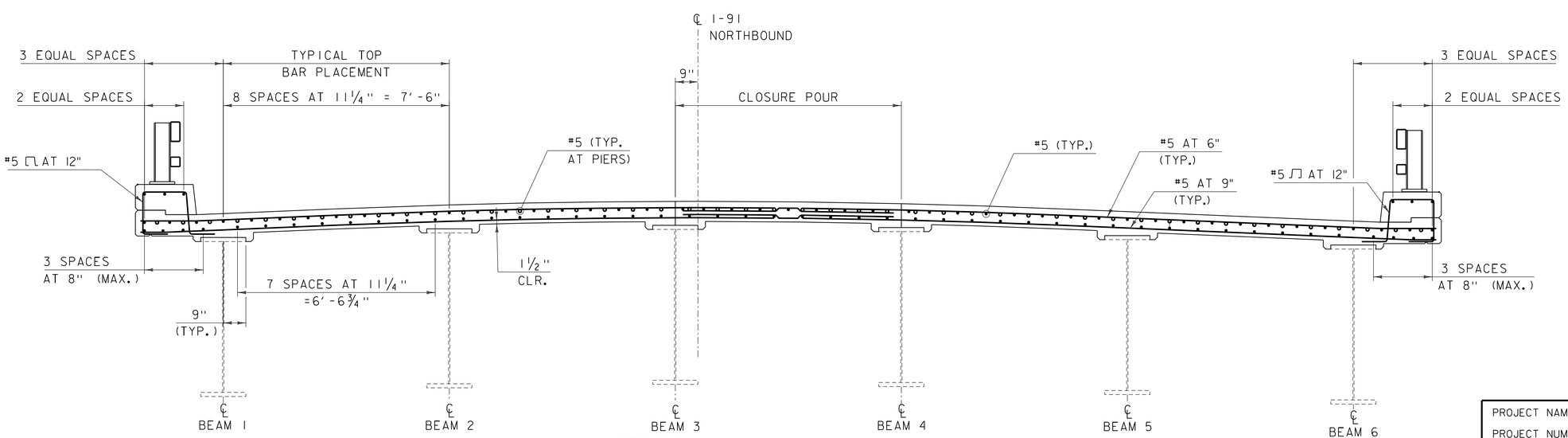

SECTION A-A

SCALE: ½" = 1'-0"

NOTES:

1. 3" CLEAR, UNLESS OTHERWISE SPECIFIED ON THE PLANS.
2. 3'-0" BAR LAP UNLESS OTHERWISE SPECIFIED ON THE PLANS.
3. 1'-0" HOOK UNLESS OTHERWISE SPECIFIED ON THE PLANS.
4. SEE SHEET 22 FOR RAIL LAYOUT PLAN.
5. DECK DIMENSIONS ARE APPROXIMATED FROM REFERENCE PLANS. CONTRACTOR SHALL FIELD VERIFY.

PROJECT NAME: IRASBURG	
PROJECT NUMBER: IM DECK(46)	
FILE NAME: z15all6typ-107N.dgn	PLOT DATE: 12/4/2015
PROJECT LEADER: J. BYATT	DRAWN BY: M. SMITH
DESIGNED BY: N. CARON	CHECKED BY: S. BEAUMONT
DECK DETAILS SHEET	SHEET 17 OF 45

CONSULTING ENGINEERS

CLD 15-0223 MODEL: Sheet03

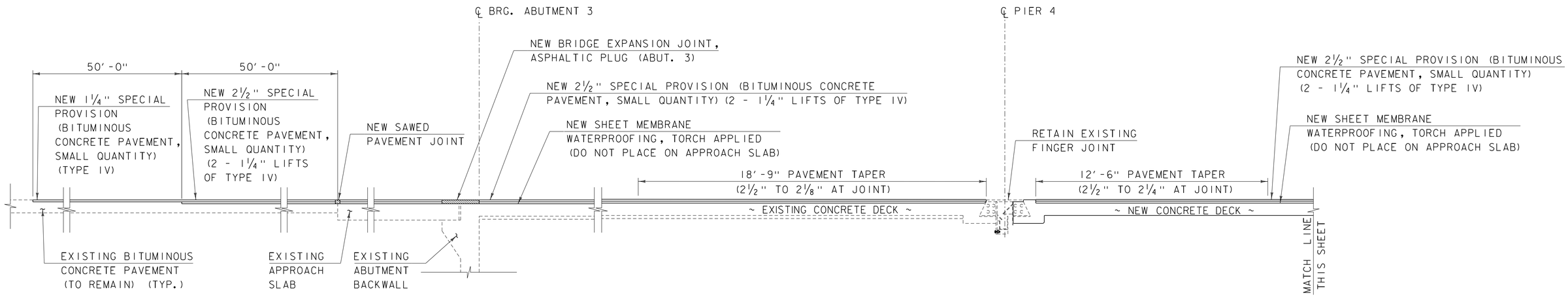

SAWED PAVEMENT JOINT REPLACEMENT SCHEDULE		
BRIDGE NO.	APPROACH SLAB 3	APPROACH SLAB 4
107N	40 LF	40 LF

JOINT SCHEDULE					
	ABUT. 3	PIER 4	PIER 5	PIER 6	ABUT. 4
JOINT TYPE	ASPHALTIC PLUG	FINGER JOINT	N/A	N/A	COMPRESSION SEAL
REQUIRED JOINT WORK	REPLACE	RETAIN (SEE NOTE)	N/A	N/A	REPLACE SEAL, RETAIN HARDWARE (SEE NOTE)
LENGTH	54 LF	59 LF	N/A	N/A	59 LF

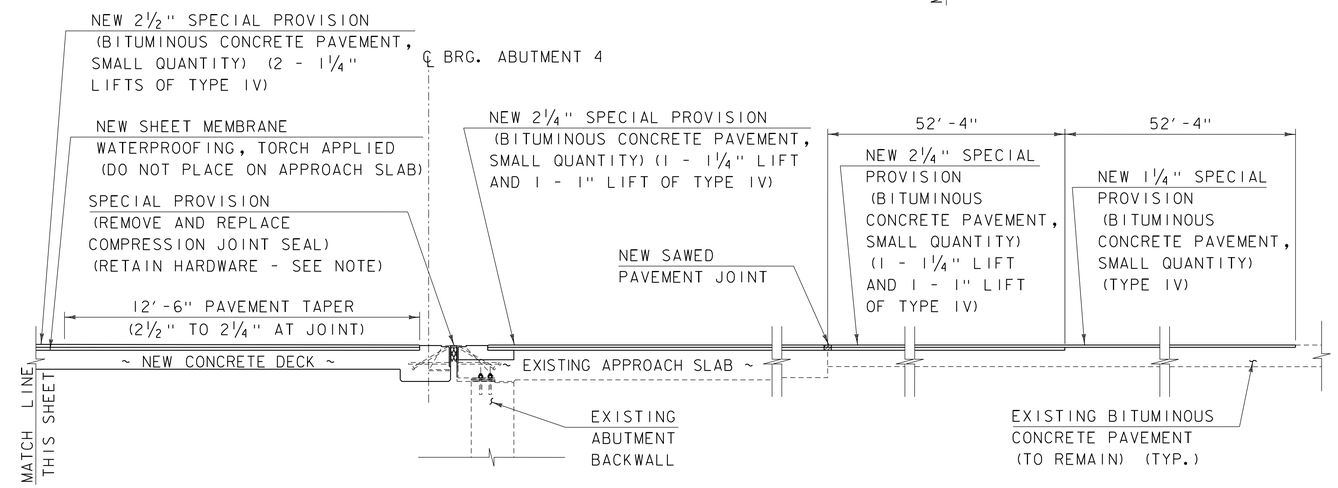

JOINT, PAVEMENT, AND MEMBRANE LAYOUT

SCALE: ⅜" = 1'-0"

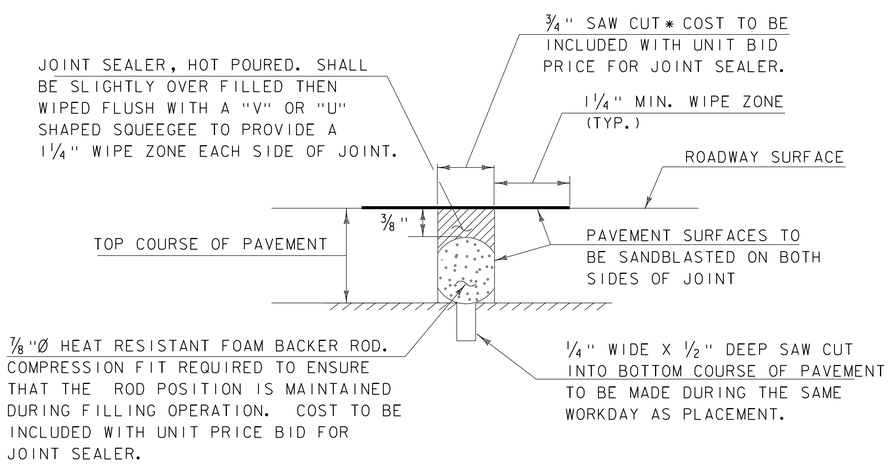

SAWED PAVEMENT JOINT DETAIL

(NOT TO SCALE)

* JOINT IS TO BE LOCATED ACCURATELY BY STRING LINING, OR OTHER MEANS, PRIOR TO PAVING, SO THAT THE SAW CUT WILL BE MADE DIRECTLY OVER THE END OF CONCRETE DECK. JOINT SHALL BE CUT DRY IN A SINGLE PASS AND BE SEALED WITHIN 24 HOURS OR PRIOR TO EXPOSURE TO TRAFFIC. JOINT SHALL BE CLEANED PRIOR TO APPLYING THE JOINT SEALER. ALL WORK SHALL BE PAID UNDER ITEM 524.11, "JOINT SEALER, HOT POURED".

NOTE: SEE NOTES 17 THROUGH 19 ON SHEET 2 FOR ADDITIONAL JOINT INFORMATION.

PROJECT NAME: IRASBURG
PROJECT NUMBER: IM DECK(46)

FILE NAME: z15all6typ-107N.dgn
PROJECT LEADER: J. BYATT
DESIGNED BY: J. FRENCH
JOINT DETAILS SHEET 1

PLOT DATE: 12/4/2015
DRAWN BY: M. SMITH
CHECKED BY: S. BEAUMONT
SHEET 18 OF 45

CLD CONSULTING ENGINEERS

CLD 15-0223 MODEL: Sheet04

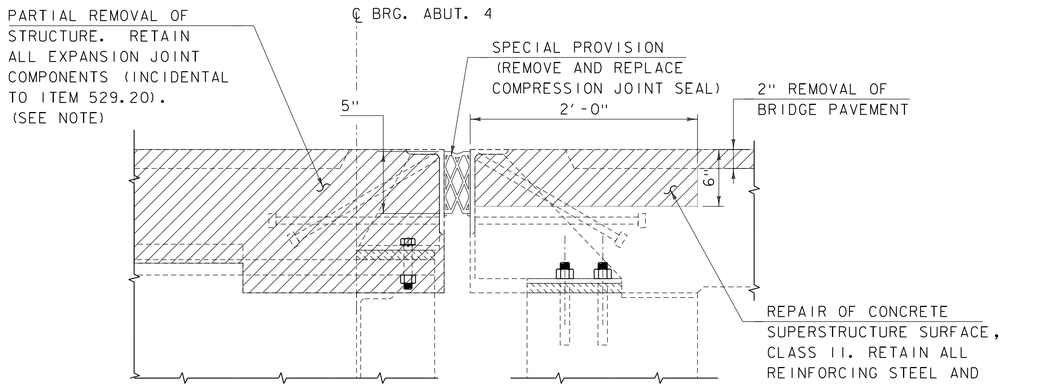

JOINT REMOVAL DETAIL AT ABUTMENT 4

SCALE: 1½" = 1'-0"

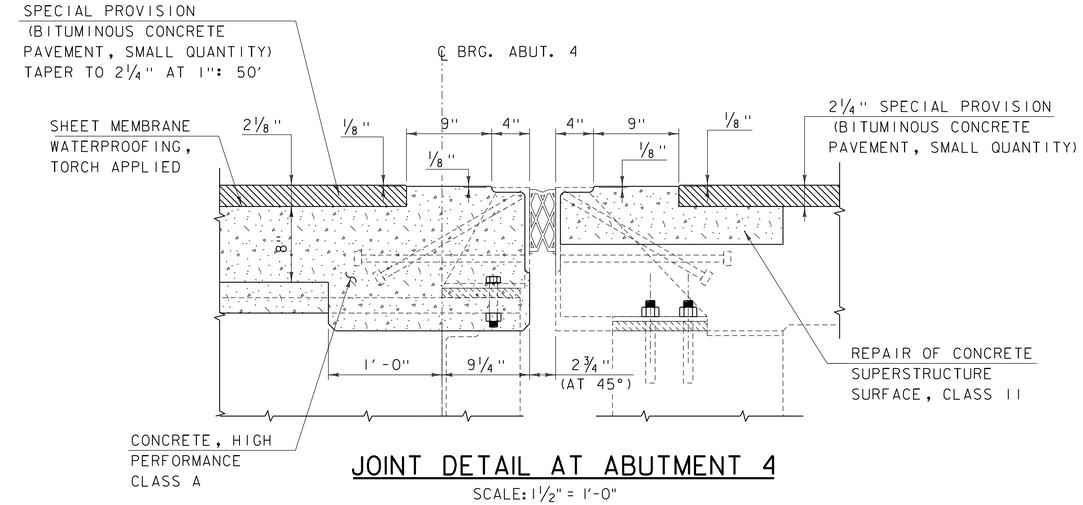

JOINT DETAIL AT ABUTMENT 4

SCALE: 1½" = 1'-0"

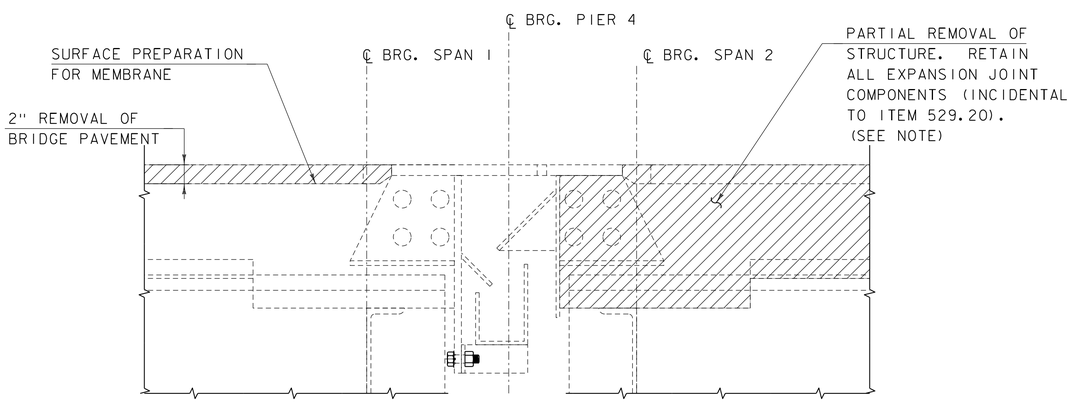

JOINT REMOVAL DETAIL AT PIER 4

SCALE: 1½" = 1'-0"

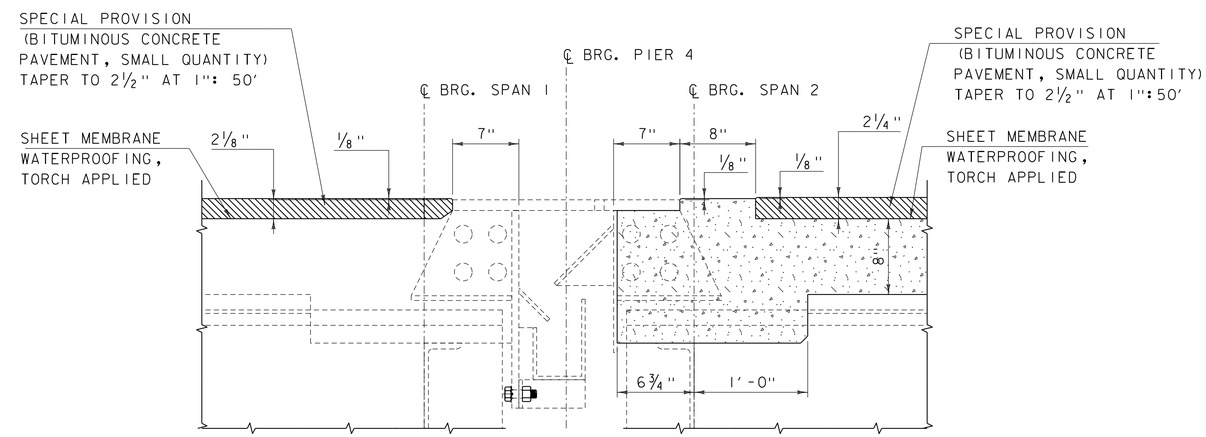

JOINT DETAIL AT PIER 4

SCALE: 1½" = 1'-0"

NOTE: SEE NOTES 17 THROUGH 19 ON SHEET 2 FOR ADDITIONAL JOINT INFORMATION.

PROJECT NAME: IRASBURG	
PROJECT NUMBER: IM DECK(46)	
FILE NAME: z15all6typ-107N.dgn	PLOT DATE: 12/4/2015
PROJECT LEADER: J. BYATT	DRAWN BY: M. SMITH
DESIGNED BY: J. FRENCH	CHECKED BY: S. BEAUMONT
JOINT DETAILS SHEET 2	SHEET 19 OF 45

CONSULTING ENGINEERS

CLD 15-0223 MODEL: Sheet05

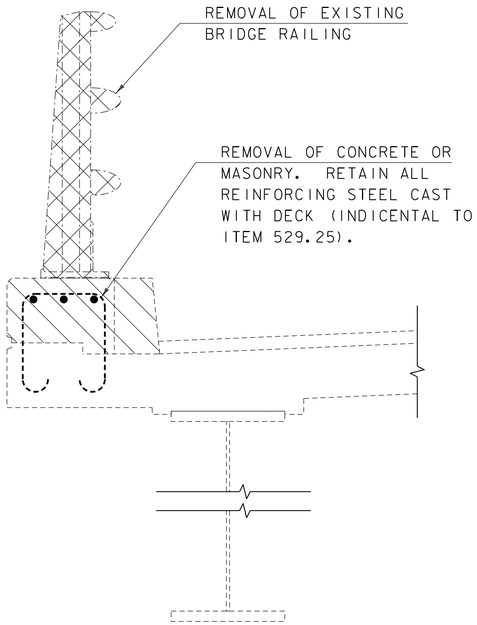

SPAN 1 REMOVAL LIMITS

SCALE: 1" = 1'-0"

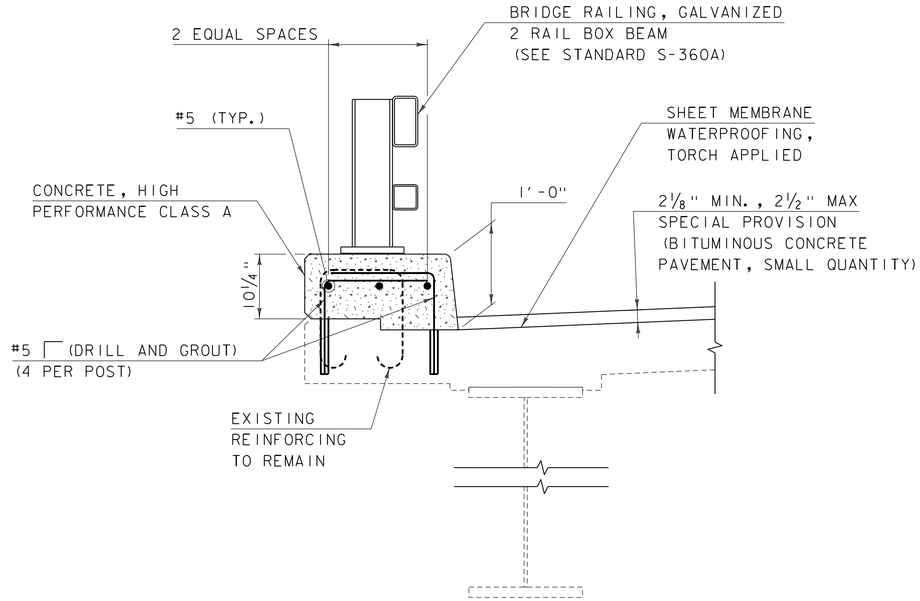

TYPICAL SPAN 1 SECTION

SCALE: 1" = 1'-0"

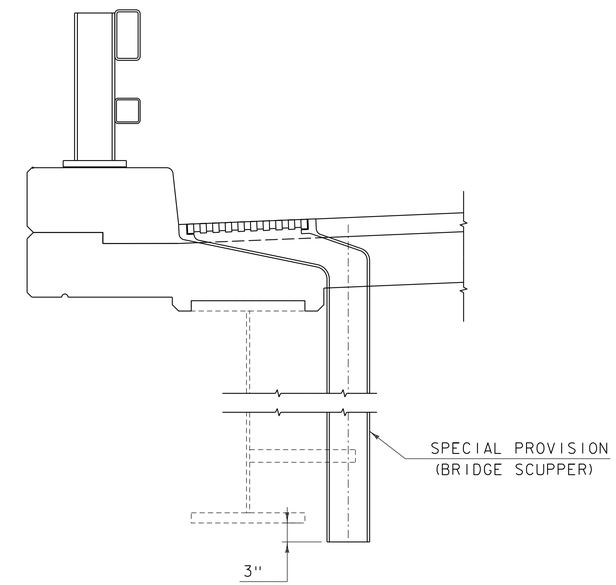

TYPICAL SCUPPER DETAIL

SCALE: 1" = 1'-0"

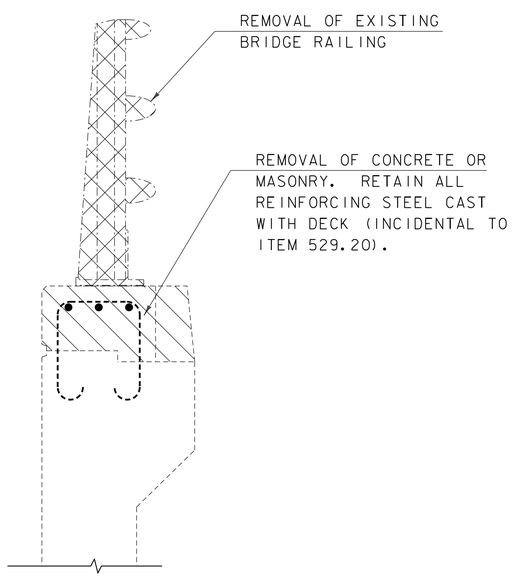

WINGWALL REMOVAL LIMITS

SCALE: 1" = 1'-0"

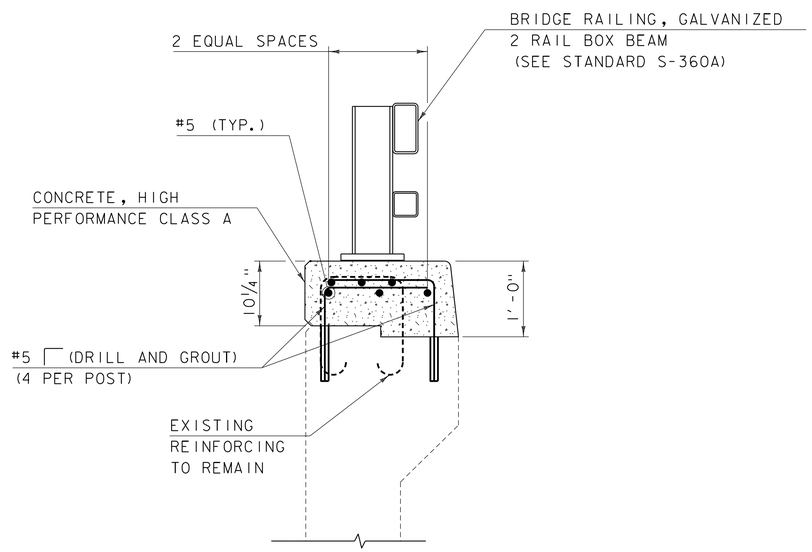

TYPICAL WINGWALL SECTION

SCALE: 1" = 1'-0"

REMOVAL OF EXISTING BRIDGE RAILING

REMOVAL OF CONCRETE OR MASONRY
SEE NOTES 14 AND 15 ON SHEET 2.

CONCRETE, HIGH PERFORMANCE CLASS A

PROJECT NAME: IRASBURG	
PROJECT NUMBER: IM DECK(46)	
FILE NAME: z15all6typ-107N.dgn	PLOT DATE: 12/4/2015
PROJECT LEADER: J. BYATT	DRAWN BY: M. SMITH
DESIGNED BY: J. FRENCH	CHECKED BY: S. BEAUMONT
CURB REPLACEMENT DETAILS SHEET	SHEET 20 OF 45

CLD CONSULTING ENGINEERS

CLD 15-0223 MODEL: Sheet06

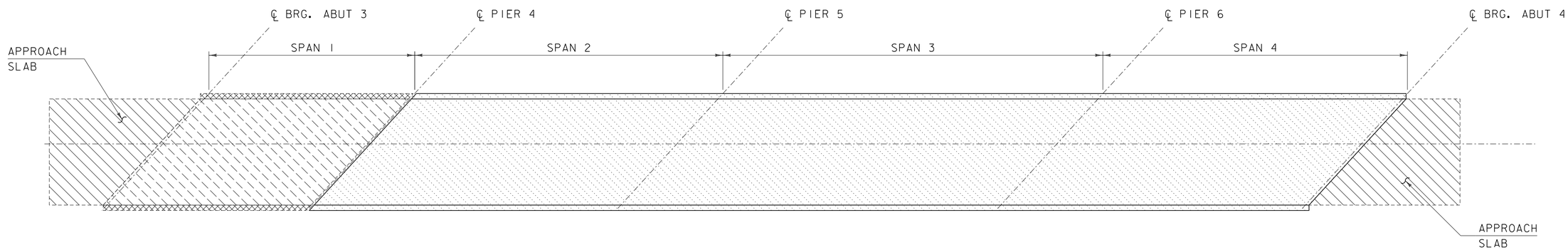

BITUMINOUS CONCRETE/ CONCRETE REMOVAL

SCALE: 1" = 20'-0"

REMOVE BIT. CONC PAVMENT TO TOP OF AT GRADE APPROACH SLABS, PAID AS ITEM 529.10 (NO MORE THAN 4" OF PAVEMENT SHALL BE REMOVED)

REMOVE BIT. CONC. PAVEMENT TO TOP OF BRIDGE DECK AND REMOVE THE BARRIER MEMBRANE

REMOVE BRIDGE RAIL AND CONCRETE CURB

REMOVE BRIDGE DECK (SEE NOTE 5)

NOTES:

1. REMOVAL OF THE BITUMINOUS CONCRETE PAVEMENT WILL BE PAID UNDER ITEM 529.10.
2. REMOVAL OF THE BARRIER MEMBRANE WILL BE PAID UNDER ITEM 580.16.
3. REMOVAL OF THE BRIDGE RAILING WILL BE PAID UNDER ITEM 525.10.
4. REMOVAL OF THE CONCRETE CURB WILL BE PAID UNDER ITEM 529.25.
5. REMOVAL OF THE BRIDGE DECK, INCLUDING THE CONCRETE DECK AND CURBS, BARRIER MEMBRANE, PAVEMENT, AND BRIDGE RAILING, OF SPANS 2 THROUGH 4 WILL BE PAID UNDER ITEM 529.20.

CLD 15-0223 MODEL: Sheet07

PROJECT NAME: IRASBURG	
PROJECT NUMBER: IM DECK(46)	
FILE NAME: z15all6typ-107N.dgn	PLOT DATE: 12/4/2015
PROJECT LEADER: J. BYATT	DRAWN BY: M. SMITH
DESIGNED BY: J. FRENCH	CHECKED BY: S. BEAUMONT
BITUMINOUS CONCRETE REMOVAL PLAN SHEET	SHEET 21 OF 45

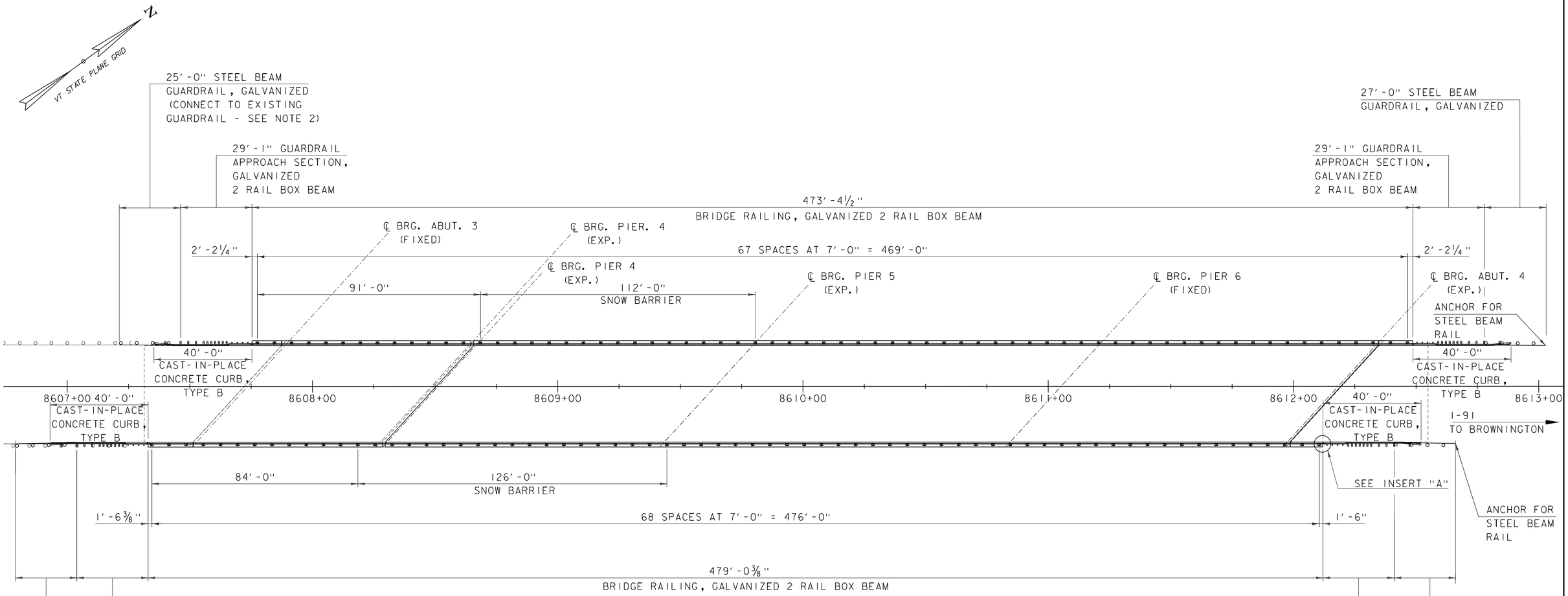

RAIL LAYOUT PLAN

SCALE 1" = 20'-0"

SCALE 1" = 20'-0"
20 0 20

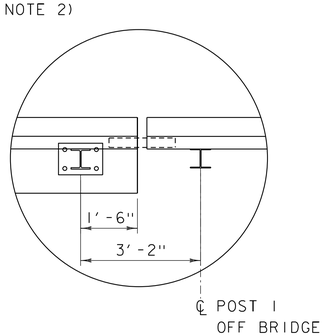

INSERT "A"

SCALE: 1/2" = 1'-0"

NOTES:

1. REFER TO STANDARDS G-1, G-1d, S-360A, AND S360B.
2. PAYMENT FOR NEW STEEL BEAM GUARDRAIL CONNECTION TO EXISTING RAIL SHALL BE INCIDENTAL TO ITEM 621.20, "STEEL BEAM GUARDRAIL, GALVANIZED".

PROJECT NAME: IRASBURG	
PROJECT NUMBER: IM DECK(46)	
FILE NAME: z15all6rail_bdr-107N.dgn	PLOT DATE: 12/4/2015
PROJECT LEADER: J. BYATT	DRAWN BY: P. McKECHNIE
DESIGNED BY: L. GREER	CHECKED BY: S. FORTIER
RAIL LAYOUT SHEET	SHEET 22 OF 45

CLD 15-0223 MODEL: Sheet01

750-A

STATE OF VERMONT
DEPARTMENT OF HIGHWAYS

PROPOSED IMPROVEMENT

INTERSTATE PROJECT

TOWNS OF IRASBURG-BROWNINGTON-COVENTRY-DERBY

COUNTY OF ORLEANS

INTERSTATE ROUTE 91

IRASBURG—DERBY

BEGINNING AT A POINT APPROXIMATELY 1.540 MILES SOUTHWESTERLY FROM THE IRASBURG—BROWNINGTON TOWN LINE U.S.5, AND EXTENDING NORTHERLY 7.769 MILES.

LENGTH OF ROADWAY - 40,463.29 FEET = 7.664 MILES
LENGTH OF BRIDGES - 447.43 FEET = 0.085 MILES
LENGTH OF PROJECT - 40,912.72 FEET = 7.749 MILES

TRAFFIC DATA

1962	ADT	1680
1987	ADT	4580
1987	DHV	715
	D	57%
	T	8%
	V	60 MPH

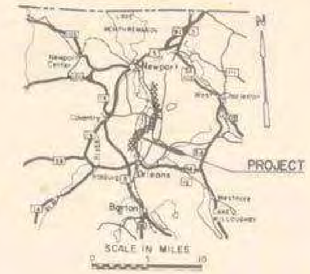

STATE	PROJECT NO	FISCAL YEAR	SHEET NO	TOTAL SHEETS
VT	I 91-3(8)	1970	1	605

THESE PLANS HAVE BEEN REDUCED PHOTOGRAPHICALLY TO APPROXIMATELY 1/2 SCALE

Dated 28 April 70

FERINI CORPORATION

Louis L. Capone

Louis L. Capone, Vice President

Contractor

Commissioner

INDEX OF SHEETS

1	TITLE S	
2	ALIGNMENT SHEET	
3-7	TYPICAL SECTIONS AND DETAIL SHEETS	
8-9	QUANTITY SHEETS	
10-21	DRAINAGE SHEETS	
22-37	EARTHWORK AND GRADE SHEETS	
38-40	ROW DETAIL SHEETS	
41-99	PLAN AND PROFILE SHEETS - MAINLINE AND SA-3	
100-101	ROUND PLATE PIPE AND PLATE PIPE ARCH DETAIL SHEETS	
102-103	BLANK	
104-115	ROUND PLATE PIPE AND PLATE PIPE ARCH DETAIL SHEETS	
116-119	BLANK	
120	A 60	SOLID ROCK EXCAVATION 1-17-69 R
121	BLANK	
122	B 5	TYPICAL SLOPE GRADING 3-10-65
123	B 6	MUCK EXCAVATION 3-10-65
124	B 10	EMBANKMENT ON A SLOPE 3-10-65
125	B 11	UNDERDRAIN, SHATTERED ROCK SUBGRADE-SLOPE STABILIZATION 3-10-65
126	B 15	ENTRANCE AND EXIT TERMINALS 7-21-67 R
127	B 17	U-TURNS AND REST AREAS 9-10-69 R
128	C 1	CURBS 9-10-69 R
129	C 16	CURBS 3-10-65
130	D 2	UNDERDRAIN AND HEADWALLS 6-19-69 R
131	D 3	JUTE MATTING 7-19-67 R
132	D 4	ELBOWS AND FLUSHING BASINS 12-4-68 R
133	D 6	DROP INLET W/GRATE FOR USE IN DITCHES 12-23-66
134	D 8	DROP INLETS 3-10-65
135	D 9	REINFORCED CONCRETE THROAT ADAPTOR 3-10-65
136	D 10	DROP INLET TOPS 3-10-65
137	D 11	DETAIL OF GRATES AND COVERS 3-10-65
138	D 13	CONCRETE CATCH BASINS 5-21-69 R
139	D 16	PRECAST REINFORCED CONCRETE CURB DROP INLET 10-28-69
140	D 17	A.C.C.M.P. VERTICAL RISER 7-1-68 R
141	E 31	FEDERAL AID CONSTRUCTION IDENTIFICATION SIGNS 9-21-67 R
142	E 32	ROAD CONSTRUCTION APPROACH SIGNS 1-6-67
143	E 33	BRIDGE CONSTRUCTION APPROACH SIGNS 1-6-67
144	E 34	ON-PROJECT CONSTRUCTION SIGNS 5-3-67 R
145	F 1	PROPERTY LINE FENCE 11-29-67 R
146	G 3	THREE CABLE GUARD RAIL W/STEEL POSTS AND ANCHORS 9-1-65 R
147	G 4	WOOD GUIDE POSTS, PLANK GUARD RAIL 12-30-65 R
148	G 8	BRIDGE RAILING FOR BRIDGE APPROACHES 2-13-68 R
148-A	G 9	BRIDGE RAILING FOR BRIDGE APPROACHES 8-21-68 R
149	J 1	PROJECT AND BOUNDARY MARKERS 3-10-65
150	SCB D1 67	GENERAL NOTES & INFORMATION 1-24-68
151	SCB D2 67	DETAIL "A" & "B" & "C" 1-24-68
152	SCB D3 67	DRAIN TROUGH DETAILS 1-24-68
153	SCB D4 67	REINFORCING AT ABUTMENTS 12-17-68 R
154	SCB D6 67	DETAILS "A" & "B" 5-23-69 R
155	SCB D7 67	INTERMEDIATE DIAPHRAGM 1-24-68
156	SCB D8 67	BEARING DEVICES 1-24-67
157	SCB D9 67	DETAIL "A" 1-24-68
158-159	SB R1 64	ALUMINUM BRIDGE RAILING DETAILS SHT #1 1-13-16-68 R, SHT #2 11-8-66 R
160	SB R2 65	STEEL BRIDGE RAILING DETAILS 11-8-66 R
161-168	BLANK	
169-198	BRIDGE SERIES 100	I-91 OVER SA-3, CP RR, & RIVER AT STA. 2538± IRASBURG
199-211	BRIDGE SERIES 200	SA-3 OVER I-91 AT STA. 2683± COVENTRY
212-231	SOUTHBOUND CROSS SECTIONS	STA. 2480+00 - 2517+19.21
232-250	NORTHBOUND CROSS SECTIONS	STA. 2480+00 - 2546+26.12
251-272	SOUTHBOUND & NORTHBOUND CROSS SECTIONS	STA. 2517+32.17-2550+00
273-432	SOUTHBOUND CROSS SECTIONS	STA. 2550+50 - 2895+00
433-584	NORTHBOUND CROSS SECTIONS	STA. 2550+50 - 2895+00
585-588	SA-3 CROSS SECTIONS	
589-605	CULVERT CROSS SECTIONS	

CONVENTIONAL SIGNS

NOW
COUNTY LINE
TOWN LINE
FENCE LINE
STONE WALL
UNFENCED PROPERTY
GUARD RAIL
TRAVELED WAY
RAILROAD
RETAINING WALL
CENTER LINE
SURVEY LINE
CULVERT
DROP INLET
TROLLEY POLE
POWER POLE
TELEPHONE POLE
TREES
HEDGE
LIMITED ACCESS

FEDERAL AID CONSTRUCTION SIGN

SLOPE RIGHTS

GROUND ELEVATION — DATUM LINE
GRADE ELEVATION — DATUM LINE

CURVE DATA

DEFLECTION OF ANGLE	Δ
DEGREE OF CURVE	D
RADIUS OF CURVE	R
TANGENT DISTANCE	T
LENGTH OF CURVE	L
EXTERNAL DISTANCE	E
POINT OF INTERSECTION	PI
POINT OF CURVE	PC
POINT OF TANGENT	PT
POINT ON TANGENT	POT
POINT ON SUB-TANGENT	POST
SEISMIC POINT PROFILE	▽

PREPARED BY
EDWARDS AND KELCEY, INC.
BOSTON, MASSACHUSETTS

THESE PLANS ARE SUBJECT TO SUCH REVISIONS AS MAY BE REQUIRED BY THE BUREAU OF PUBLIC ROADS OR THE COMMISSIONER OF HIGHWAYS.

CONSTRUCTION IS TO BE CARRIED ON IN ACCORDANCE WITH THESE PLANS AND THE STANDARD SPECIFICATIONS FOR HIGHWAY AND BRIDGE CONSTRUCTION, DATED APRIL, 1964, AS APPROVED BY THE BUREAU OF PUBLIC ROADS ON OCTOBER 12, 1964, INCLUDING ALL SUBSEQUENT APPROVED REVISIONS AND SUCH REVISED SPECIFICATIONS AND SPECIAL PROVISIONS AS ARE INCORPORATED IN THESE PLANS.

APPROVED C.H. Stockwell, ASST. CHIEF ENGINEER	APPROVED [illegible], CHIEF ENGINEER	APPROVED [illegible], DIRECTOR	APPROVED [illegible], DISTRICT ENGINEER	APPROVED [illegible], PROJECT ENGINEER	APPROVED R.H. Gould, CHIEF ENGINEER
DATE 14 May 69	DATE 19 May 69	DATE 5/13/69	DATE 9 May, 1969	DATE 5/13/69	DATE 5/16/69 SUBMITTED BY ORDER OF THE STATE HIGHWAY BOARD

STATE OF VERMONT HIGHWAYS DEPARTMENT CONTRACT PLANS APR 29 1970

FOR RIGHT-OF-WAY DETAILS SEE RIGHT-OF-WAY PLANS FOR THIS PROJECT

Stage I Construction

DEPARTMENT OF TRANSPORTATION
BUREAU OF PUBLIC ROADS

APPROVED

DIVISION ENGINEER DATE

PROJECT I 91-3(8) NO

SHEET 1 OF 605 SHEETS

IRASBURG
IM DECK(46)
BRIDGE NO. 107N
SHEET 23 OF 45
FOR REFERENCE ONLY

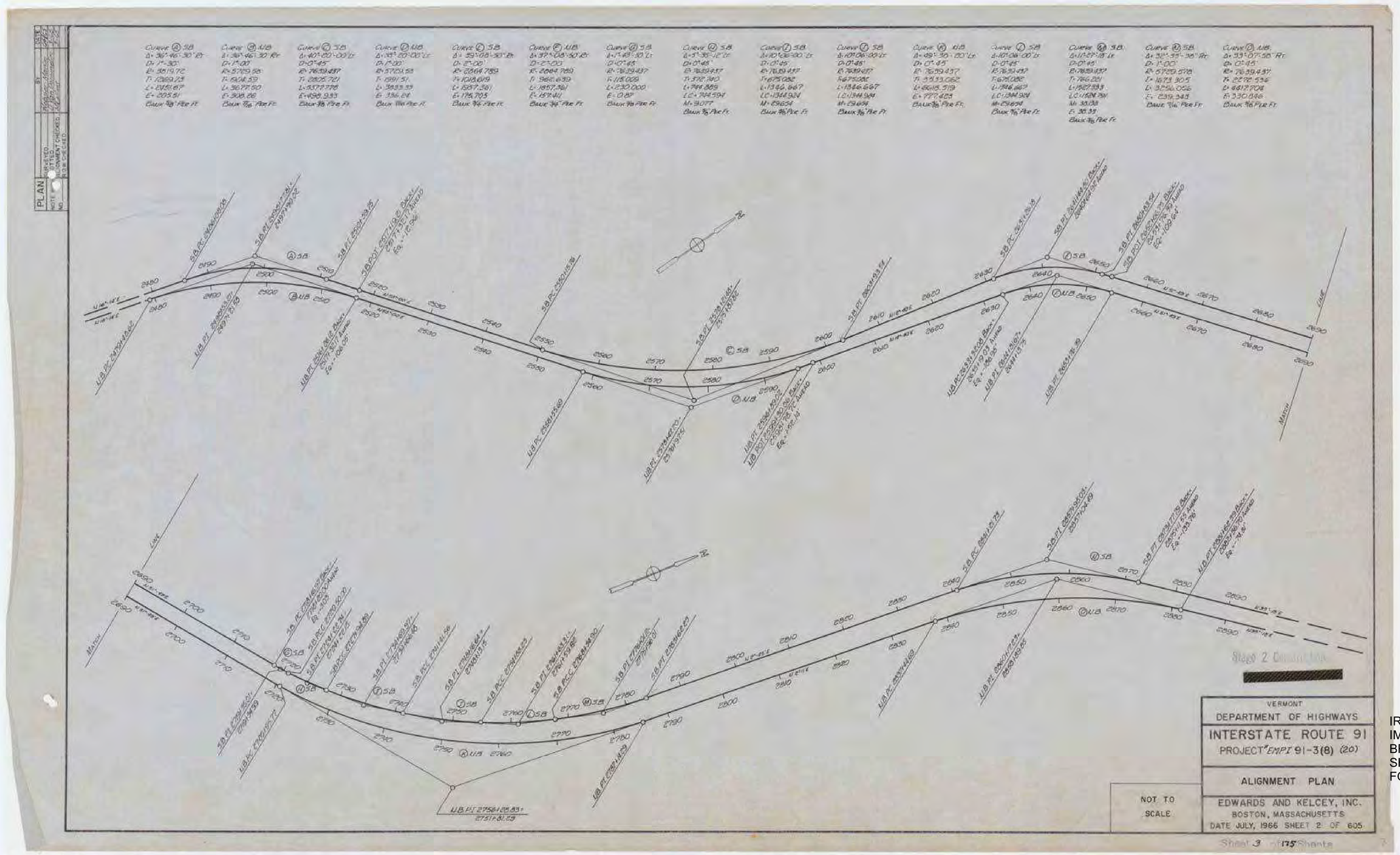

IRASBURG
IM DECK(46)
BRIDGE NO. 107N
SHEET 24 OF 45
FOR REFERENCE ONLY

SOUTHBOUND ROADWAY

STAGE 2
STAGE 1 SUBGRADE ELEVATION 2.67' (2'-8") BELOW

EARTHWORK SHEET

STATE OF VERMONT
DEPARTMENT OF HIGHWAYS

FED. ROAD DIVISION NO.	STATE	PROJECT NO.	FISCAL YEAR	SHEET NO.	TOTAL SHEETS
	VT.	I 91-3(8)			

Grades: -1.7759 % ; 700' V.C. ; +0.880 %

Station	Elev. on Tangent	Elev. on V Curves	Corr V.C.	Dist	Total Exc. Area	Total Exc. Cu Yds	Rock Area	Rock Cu Yds	Emb. Area	Emb. Cu Yds	Base Area	Base Cu Yds
2480+00	752.59								1055			
				50						1951		
+50	751.70								1060			
				50						2026		
2481	750.81								1070			
				50						2061		
+50	749.92								1081			
				50						2170		
2482	749.04								1212		C	-
				50						2109	R	-
+50	748.15								1066		F	19,965
				50						2057	FAC	1.25
2483	747.28								1156		EX F	24,956
				50						2015		
+50	746.37								1020			
				50						1980		
2484	745.48								1094			
				50						1883		
+50	744.60								980			
				50						1851		
2485	743.71								1013			
				50						1796		
+50	742.82								921			
				50						1706		
2486	741.93								922			
				50						1852		
+50	741.04								962			
				50						1829		
2487	740.16								892		C	19
				50						1607	R	
+50	739.27								790		F	13,886
				50						1582	FAC	1.25
2488	738.38								676		EX F	16,704
				50						1170		
+50	737.50								597			
				50						1045		
2489	736.60								522			
				50						907		
+50	735.72				0				458			
				50		19				545		
2490	734.83	734.88	+0.05		20				131			
				50		935				121		
+50	733.94	734.13	+0.19		990				0			
				50		1007						
2491	733.05	733.48	+0.43		98				0			
				50		91				269		
+50	732.16	732.92	+0.76		0				290			
				50						500	C	5,850
2492	731.28	732.47	+1.19						260		R	-
				50						456	F	2,126
+50	730.39	732.10	+1.71						245		FAC	1.25
				50						421	EX C	3,726
2493	729.500	731.83	+2.33		0				210			
				50		15				272		
+50	729.94	731.65	+1.71		14				85			
				50		656				81		
2494	730.38	731.67	+1.39		282				2			
				50		1872				2		
+50	730.82	731.58	+0.76		1730				0			
				50		2767						
2495	731.26	731.69	+0.43		1190							
				50		1556						
+50	731.70	731.89	+0.19		580				0			
				50		685				18		
2496	732.14	732.19	+0.05		230				19			
				50		291				38		
+50	732.58				82				22			
				50		76				147		
2497	733.02				0				137		C	3,020
				50						495	R	-
+50	733.46								400		F	4,398
				50						1076	FAC	1.25
2498	733.90								762		EX F	3,190
				50						1428		
+50	734.34								780			
				50						1153		
2499	734.78				0				465			
				50		50				506		
+50	735.22				50				61			
				50		306				75		
2500	735.66				170				0			
				50		698				14		
+50	736.10				300				15			
				50		524				21		
2501	736.54				30				19			
				50		155				18		
+50	736.98				137				0			
				50		173				13		
2502	737.42				50				14			
				50		81				115		
+50	737.86				0				110			
CARRIED FORWARD						1384				191		
COLUMN FOOTINGS						11350				40588		

Grades: +0.880 % ; 1000' V.C.

Station	Elev. on Tangent	Elev. on V Curves	Corr V.C.	Dist	Total Exc. Area	Total Exc. Cu Yds	Rock Area	Rock Cu Yds	Emb. Area	Emb. Cu Yds	Base Area	Base Cu Yds
				50		41				107		
2503	738.30				56				6			
				50		74				6	C	6,7[illegible]
+50	738.74				389				0		R	---
				50		1274					F	304
2504	739.18				642						FAC	1.75
				50		1760					EX C	6,902
+50	739.62				1076							
				50		1774						
2505	740.06				936							
				50		1293						
+50	740.50				506							
				50		1180						
2506	740.94				980							
				50		1667						
+50	741.38				1002							
				50		1230					C	2[illegible]
2507	741.82				308				0		R	---
				50		349				46	F	775
+50	742.26				60				50			
				50		56				422	FAC	1.75
2508	742.70				0				486		EX F	3615
				50						1120		
+50	743.14								820			
				50						1715		
2509	743.58								1038			
				50						2029		
+50	744.02								1150			
				50						2435		
2510	744.46								1480			
				50						2992		
+50	744.90								1420			
				50						2523		
2511	745.34								1300			
				50						2750		
+50	745.78								1580			
				50						2722	C	---
2512	746.22								1330		R	---
				50						2611	F	29,28[illegible]
+50	746.66								1490		FAC	1.24
				50						2908	EX F	36,258
2513	747.10								1750			
				50						3000		
+50	747.54								1700			
				50						2949		
2514	747.98								1505			
				50						2923		
+50	748.42								1650			
				50						2791		
2515	748.86								1365			
				50						2370		
+50	749.30								1001			
				50						1530		
2516	749.74				0				570			
				50		134				627		
+50	750.18				195				0			
				50		1222						
2517	750.62				1175							
				10.21		969						
BK 2517+15.21	750.75				1550						F	15,106
AHD 2517+32.17	750.79				1550						R	---
				17.83		1084					F	9,338
2517+50	750.95				1732							
				50		2756						
2518	751.39				1245							
				50		1938					FAC	1.25
+50	751.83				740						EX C	9,081
				50		1509						
2519	752.27				889							
				50		2180						
+50	752.71				1470							
				50		3107						
2520	753.15				2220							
				50		4833						
+50	753.59				3000							
				50		4019						
2521	754.03				2445							
				50		3708						
+50	754.47				1560							
				50		2278						
2522	754.91				870							
				50		1673						
+50	755.35				937							
				50		2284						
2523	755.79	755.75	-0.04		1530							
				50		2697						
+50	756.23	756.05	-0.18		1370							
				50		2284						
2524	756.67	756.27	-0.40		1095							
				50		1806						
+50	757.11	756.41	-0.70		853							
CARRIED FORWARD						20565						
COLUMN FOOTINGS						33166				40938		

Grades: 1000' V.C. ; +0.880 % ; -2.64383 ; BRIDGE ; -2.64383 % ; 400' V.C.

Station	Elev. on Tangent	Elev. on V Curves	Corr V.C.	Dist	Total Exc. Area	Total Exc. Cu Yds	Rock Area	Rock Cu Yds	Emb. Area	Emb. Cu Yds	Base Area	Base Cu Yds
				50		2066					R	28,661
2525	757.55	756.45	-1.10		1080				EX C	10,531	F	---
				50		3039						
+50	757.99	756.40	-1.59		1070							
				50		3907						
2526	758.43	756.27	-2.16		3180							
				50		5091						
+50	758.87	756.05	-2.82		3712							
				50		6210						
2527	759.31	755.74	-3.57		3055						C	57,855
				50		6550					R	7,089
+50	759.750	755.35	-4.40		3525						F	---
				50		6611						
2528	758.43	754.86	-3.57		3262		0				EX C	56,842
				50		5326		187				
+50	757.11	754.29	-2.82		2480		202					
				50		4931		1507				
2529	755.78	753.62	-2.16		2326		1210					
				50		5042		2490				
+50	754.46	752.87	-1.59		2888		1370					
				50		4863		3015				
2530	753.14	752.04	-1.10		2740		1840					
				50		5075		3050				
+50	751.82	751.12	-0.70		2686		1453					
				50		4930		2711				
2531	750.50	750.10	-0.40		2250		1981					
				50		4085		2957				
+50	749.17	748.99	-0.18		2162		1619					
				50		3932		2726				
2532	747.85	747.81	-0.04		2002		1700				C	53,903
				50		6169		2630			R	35,956
+50	746.53				2321		2280				F	---
				50		4609		2448				
2533	745.21				2538		1150				EX C	52,696
				50		4800		2292				
+50	743.89				2426		1125					
				50		4921		2282				
2534	742.57				2750		1205					
				50		3921		2310				
+50	741.24				2425		1290					
				50		3125		2472				
2535	739.92				2090		1380					
				50		3330		2282				
+50	738.60				1400		1080					
				50		3139		1801				
2536	737.28				1750		525				C	31,950
				50		2952		1606			R	5,985
+50	735.96				1300		810				F	---
				50		1862		983			EX C	17,976
2537	734.63			15.45	670		285					
+15.45	END ROADWAY - BEGIN BRIDGE			34.55		620		281				
+50	733.31				0		0					
				50								
2538	731.99											
				50								
+50	730.67											
				16								
+66	730.24											
				44								
2539	729.35	NOTE EMBANKMENT QUANTITY WITHIN SPLICE AREA INCLUDED										
				50								
+50	728.02											
				50								
2540	726.70											
				50								
+50	725.38											
				50								
2541	724.06								0			
				50						550		
+50	722.74			12.60					594			
+62.60	END BRIDGE - RESUME ROADWAY			37.40						2663		
2542	721.41								2282			
				50						3968		
+50	720.09								2053		C	---
				50						3591	R	---
2543	718.77								1865		F	22,636
				50						3256	FAC	1.25
+50	717.45								1651		EX F	28,295
				50						3022		
2544	716.13								1613			
				50						2917		
+50	714.80	714.85	+0.05						1537			
				50						2679		
2545	713.40	713.66	+0.16						1358			
				50						2402		
+50	712.16	712.57	+0.41						1238			
				50						2131		
2546	710.84	711.57	+0.73						1083			
				50						2056		
+50	709.52	710.67	+1.15						1100			
CARRIED FORWARD										6501		
COLUMN FOOTINGS						10679		9469		29227		

PROJECT IRASBURG - DERBY

PROJECT EMPI NO. 91-3(8)3 (20) SHEET 22 OF 605 SHEETS

28 175

IRASBURG
IM DECK(46)
BRIDGE NO. 107N
SHEET 25 OF 45
FOR REFERENCE ONLY

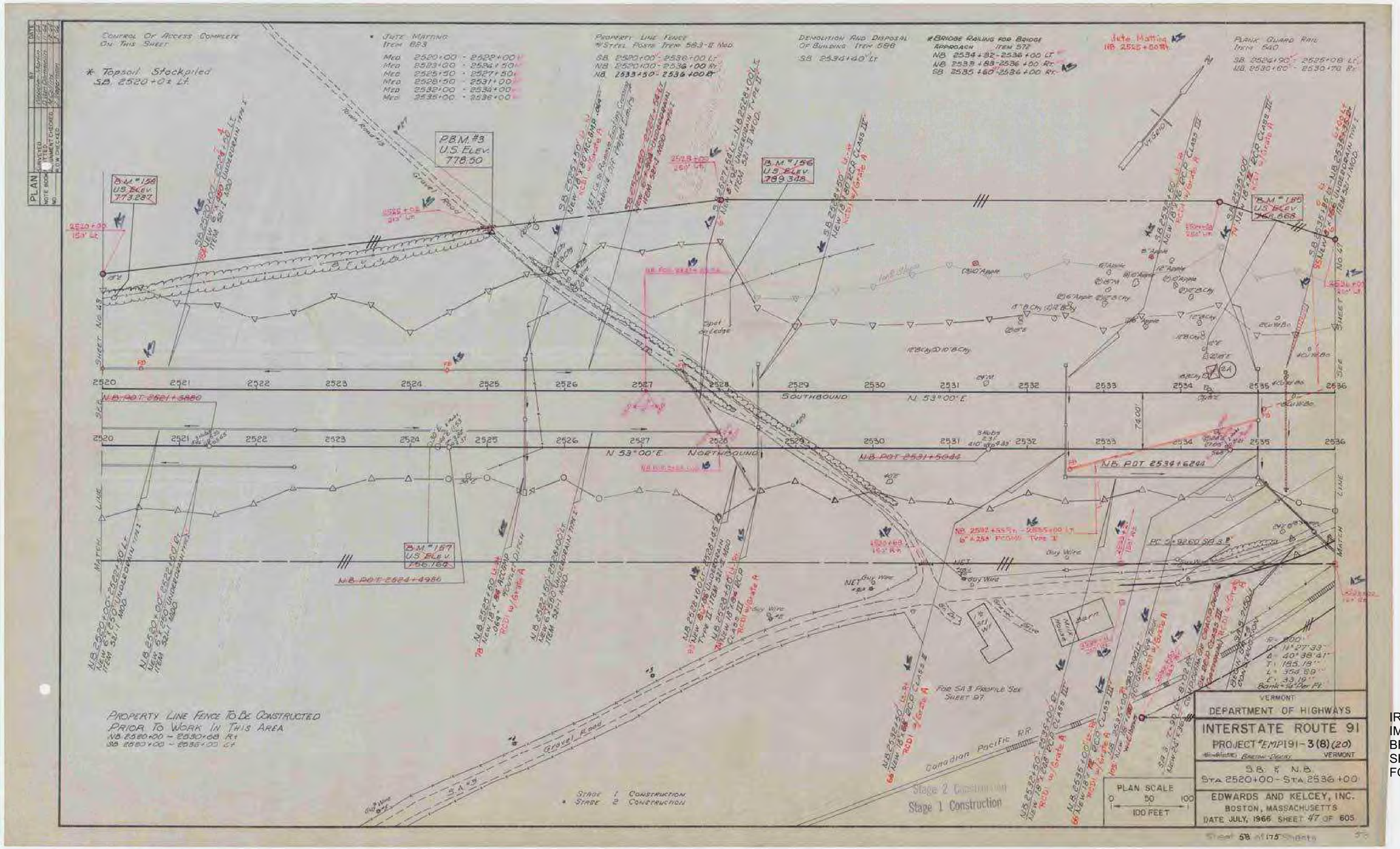

IRASBURG
IM DECK(46)
BRIDGE NO. 107N
SHEET 26 OF 45
FOR REFERENCE ONLY

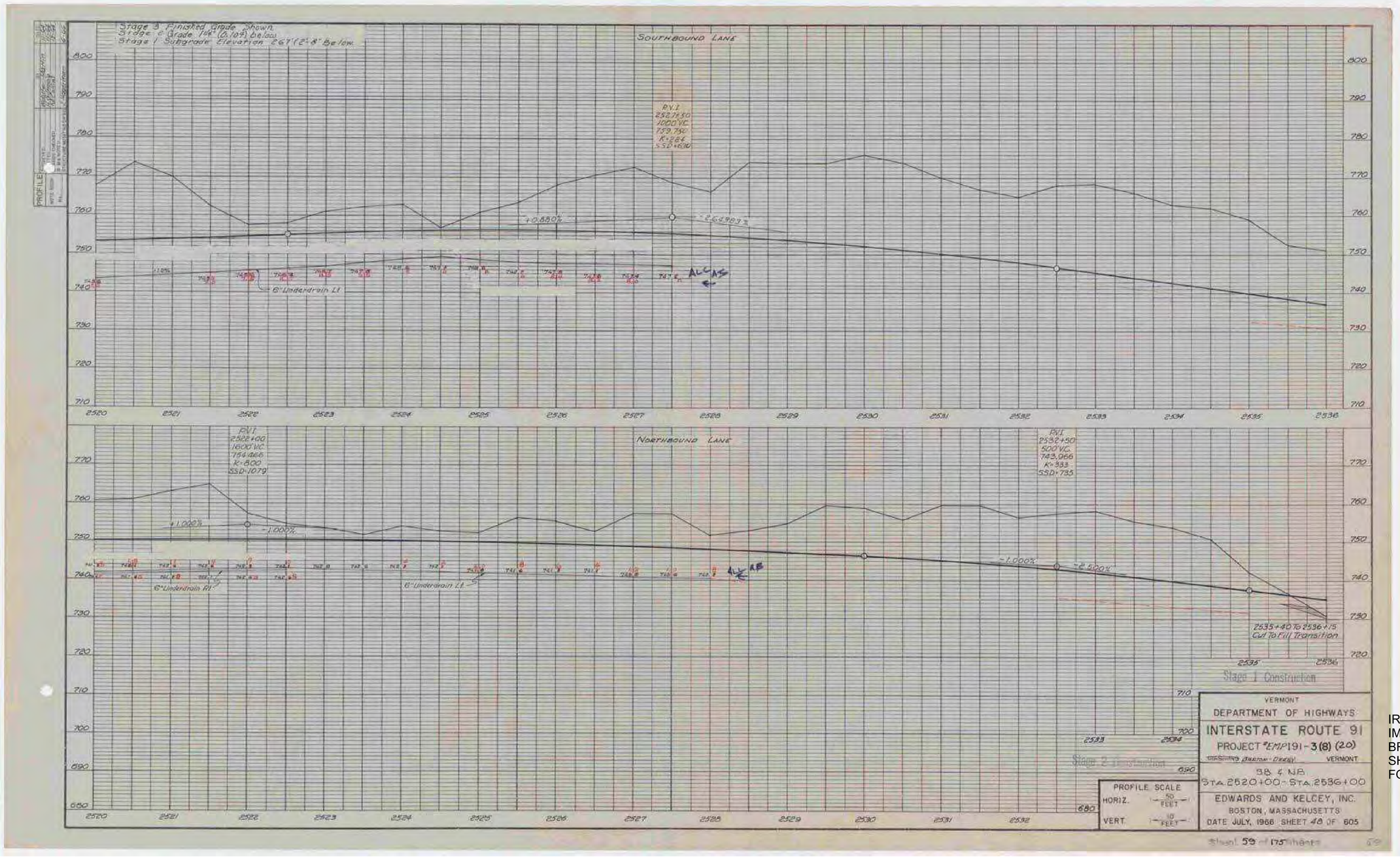

IRASBURG
IM DECK(46)
BRIDGE NO. 107N
SHEET 27 OF 45
FOR REFERENCE ONLY

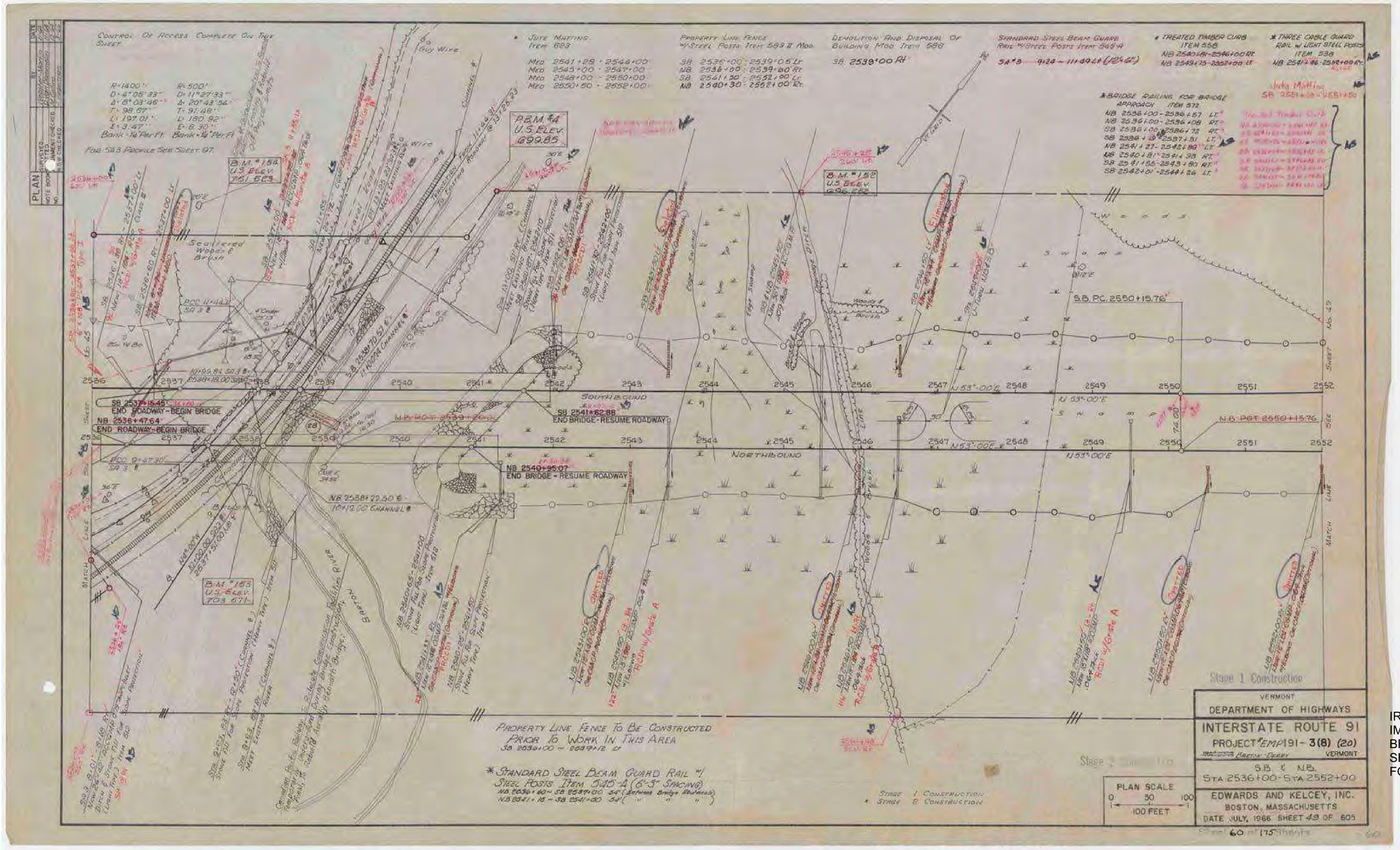

IRASBURG
IM DECK(46)
BRIDGE NO. 107N
SHEET 28 OF 45
FOR REFERENCE ONLY

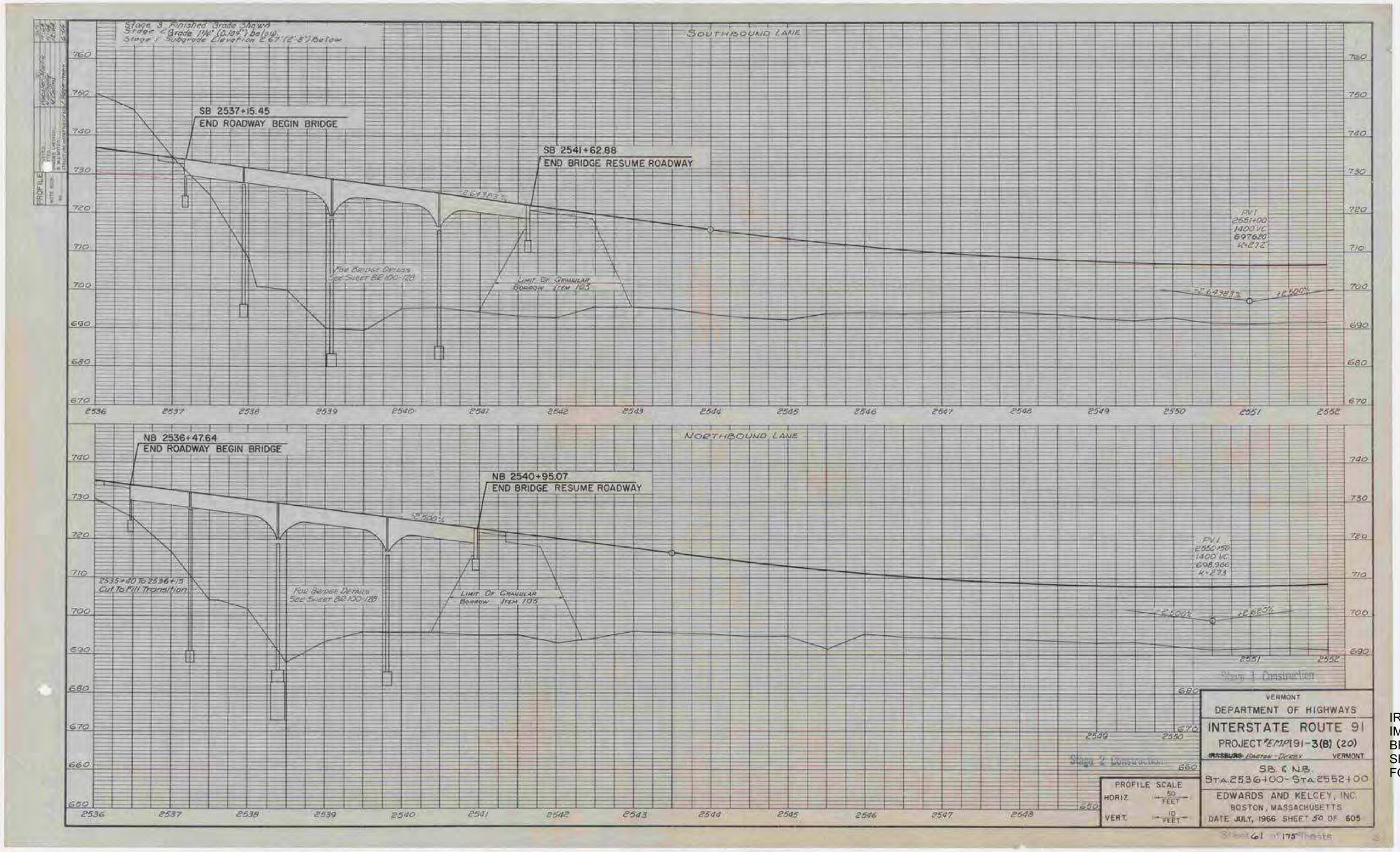

IRASBURG
IM DECK(46)
BRIDGE NO. 107N
SHEET 29 OF 45
FOR REFERENCE ONLY

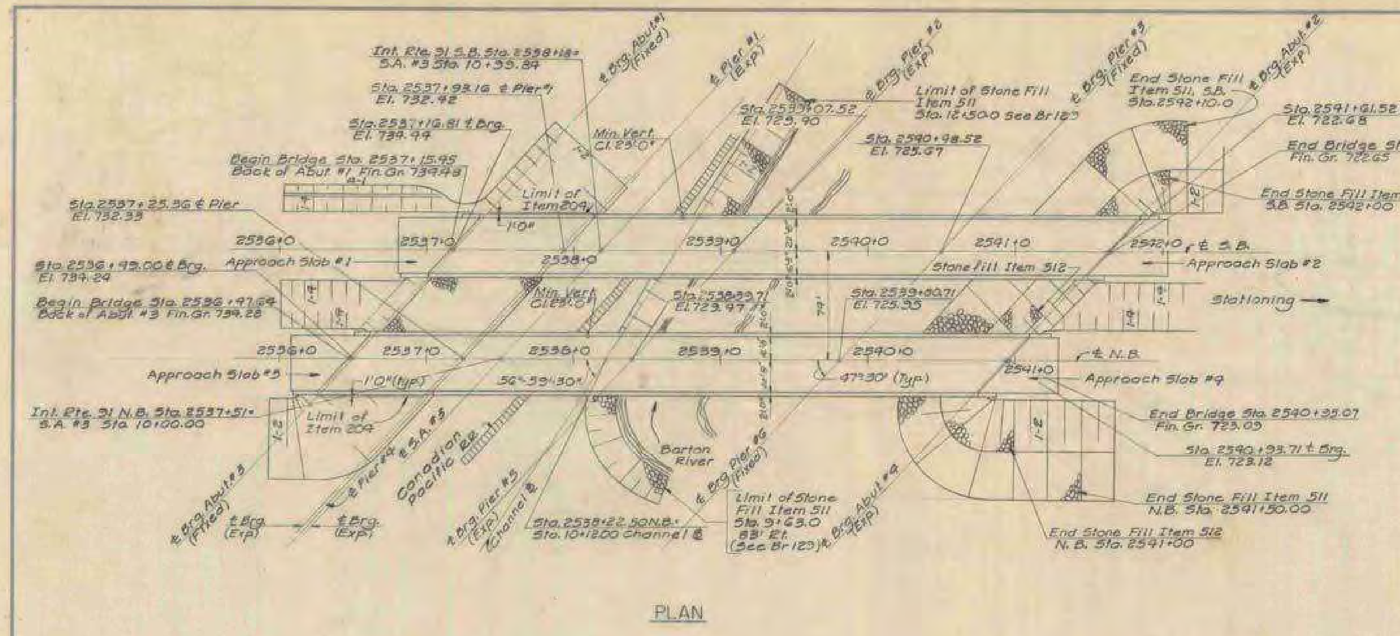

PLAN

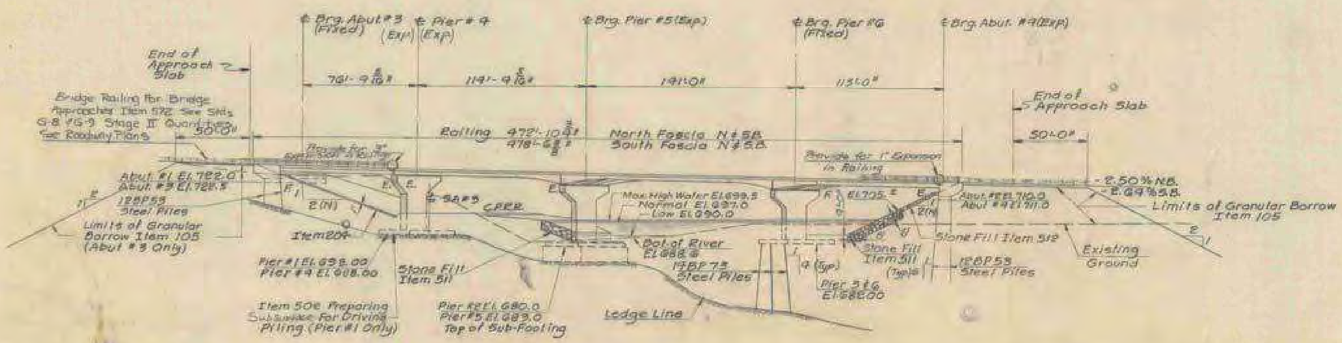

ELEVATION

LIST OF SHEETS

Br.100 Plan & Elevation
Br.101-102 Bridge Quantity Sheets
Br.103 Preliminary Information Sheet
Br.104-106 Boring Logs
Br.107 Framing Plan & Girder Details
Br.108 Girder Elevations & Cons. Details
Br.109 Deck Section & Splice
Br.110 Expansion Dam & Scupper Details
Br.111 Rocker Bearings
Br.112 Abutment #1
Br.113 Abutment #2
Br.114 Abutment #3
Br.115 Abutment #4
Br.116 Abutment #2 & #4 Details
Br.117 Abutment #1 & #3 Approach Slab
Br.118 Abutment #2 & 4 Approach Slab
Br.119 Pier #1
Br.120 Pier #2
Br.121 Pier #3
Br.122 Pier #4
Br.123 Pier #5
Br.124 Pier #6
Br.125-128 Reinforcing Schedules
Br.129 Channel Sections

STANDARD SHEETS REQUIRED

SCB D1 67 General Notes & Information Jan 24, '68
SCB D2 67 Detail A & B "C" Jan 24, '68
SCB D3 67 Drain Trough Details Jan 24, '68
SCB D4 67 Reinforcing at Abutments Dec 17, 1968
SCB D5 67 Detail A & B May 23, 1969
SCB D7 67 Intermediate Diaphragm Jan 24, '68
SCB D8 67 Bearing Devices Jan 24, '68
SCB D9 67 Detail A Jan 24, '68
SB R1 64 Aluminum Railing (2 Sheets) Sheet 1 of 2 Dec 14, 1964 - 2 of 2 Nov 8, 66 R
SB R2 65 Steel Bridge Railing Nov 8, 66 R

NOTE:

The channel excavation and stone fill shall be done between July 1 and October 1 so as not to interfere with the Rainbow Trout runs. Precautions shall be taken during construction to prevent siltation or pollution of the river.

1. Changed roadway width from 38'-0" to 39'-4", curb width from 2'-8" to 2'-0" Updated Std. Sheets R. Blake 3/69

STATE OF VERMONT
DEPARTMENT OF HIGHWAYS

PROJECT IRASBURG-LEREY
TOWN OF IRASBURG BR. 107
ROUTE NO. I-91 STA. 2539±
I-91 OVER BARTON RIVER AND S.A. #3
PLAN AND ELEVATION
SCALE 1" = 40'
IN CHARGE S. TERENZIO
DRAWN BY JVR CHECKED BY A. CENTORE
PROJECT NO. I 91-3(8) 9-57
SHEET 163 OF 869 BR 100

IRASBURG
IM DECK(46)
BRIDGE NO. 107N
SHEET 30 OF 45
FOR REFERENCE ONLY

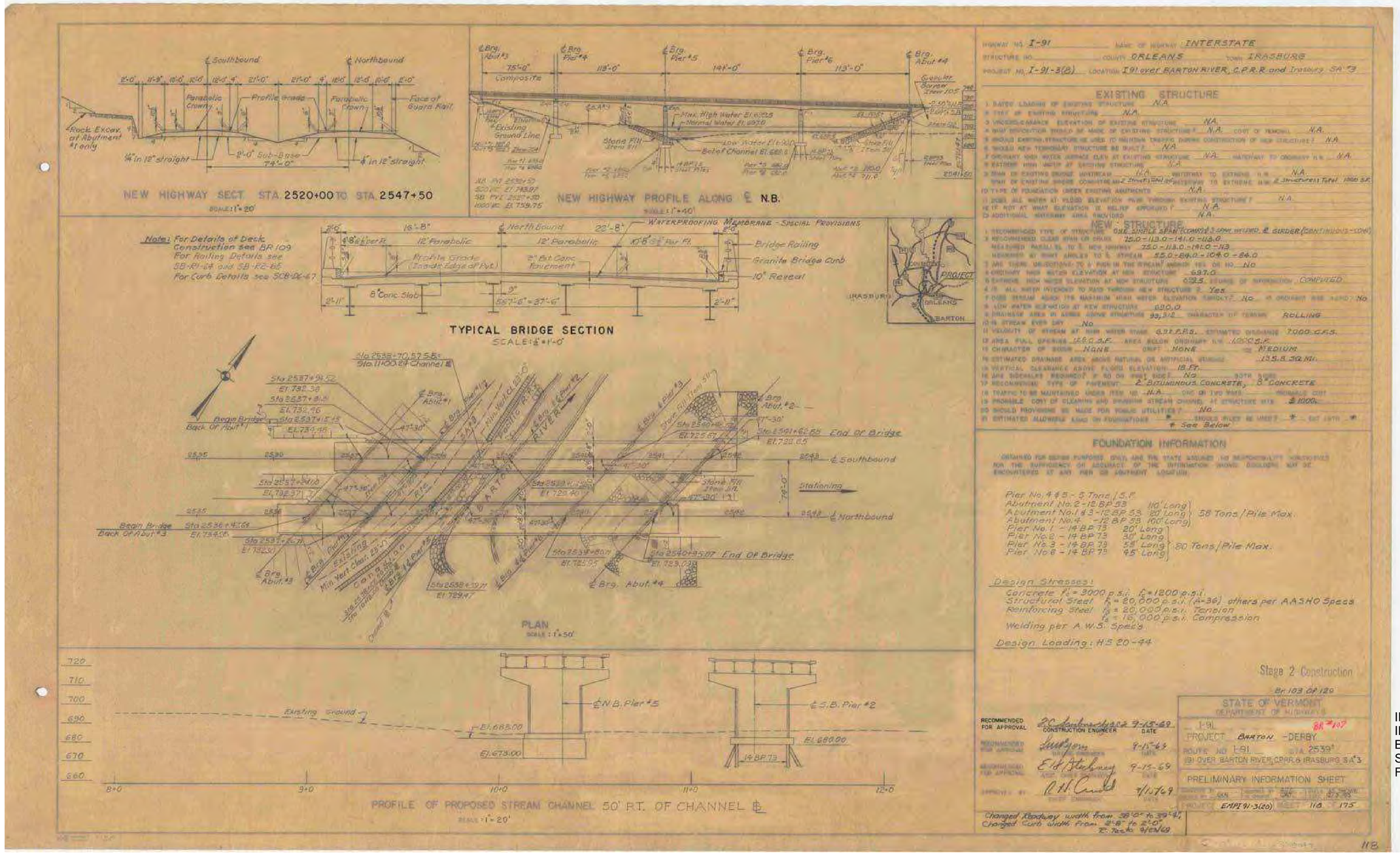

IRASBURG
IM DECK(46)
BRIDGE NO. 107N
SHEET 31 OF 45
FOR REFERENCE ONLY

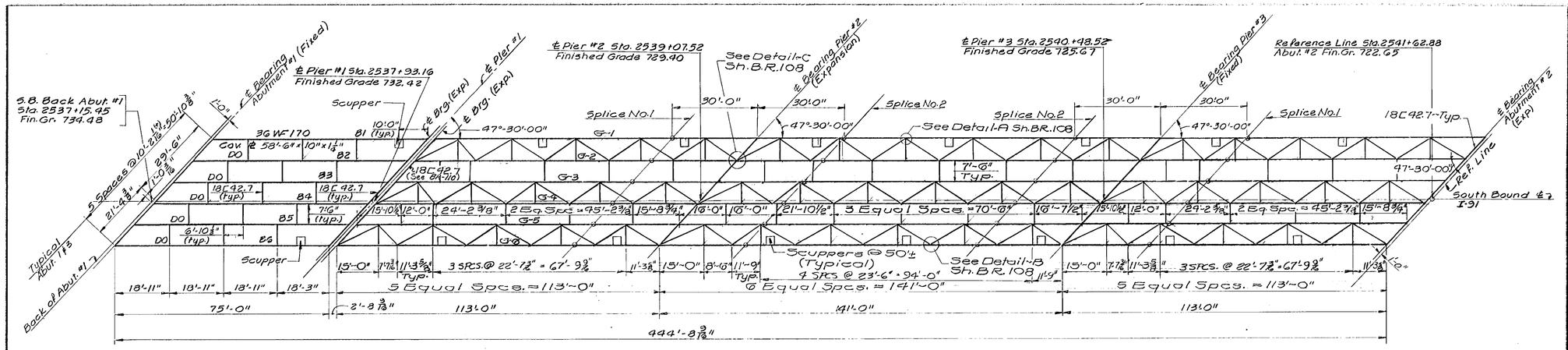

SOUTHBOUND FRAMING PLAN
SCALE: 1/16" = 1'-0"

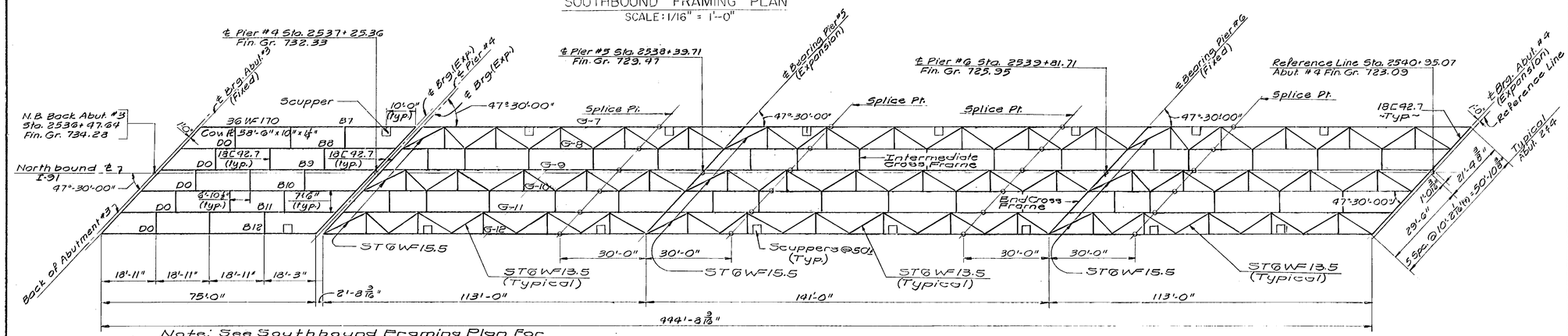

Note: See Southbound Framing Plan For Cross Frame and Lateral Bracing Dimensions.

NORTHBOUND FRAMING PLAN
SCALE: 1/16" = 1'-0"

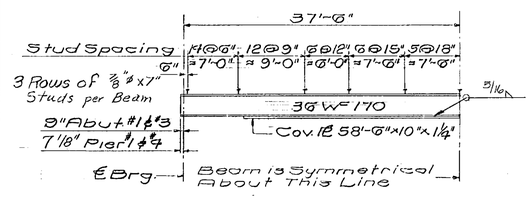

BEAM HALF ELEVATION B-1 THRU B-12
SCALE: 1/8" = 1'-0"

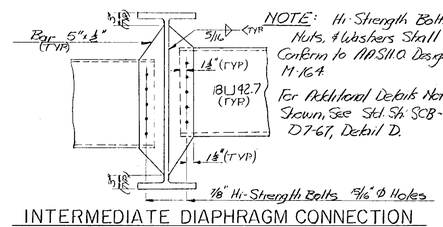

NOTE: Hi-Strength Bolts, Nuts, & Washers Shall Conform to AASHTO Designation M164.
For Additional Details Not Shown, See Std. Sh. SCB-DT-67, Detail D.

INTERMEDIATE DIAPHRAGM CONNECTION FOR ROLLED BEAM SECTION
1" = 1'-0"

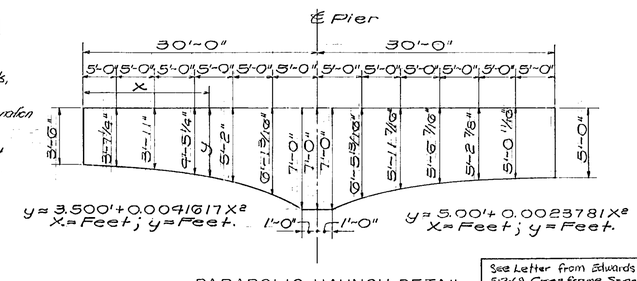

PARABOLIC HAUNCH DETAIL
N.T.S.

See Letter from Edwards & Kelcey 5-2-69. Cross frame Spacing Added. Diaphragm Connection Detail Changed 72-7654-5-11-69

Br. 107 of 129

STATE OF VERMONT
DEPARTMENT OF HIGHWAYS

PROJECT IRASBURG-DERBY
TOWN OF IRASBURG
ROUTE No. I-91 STA. 2539±
I-91 OVER BARTON RIVER AND SA#3
FRAMING PLAN AND GIRDER DETAILS
SCALE AS NOTED
IN CHARGE C. TERENZIO
DRAWN BY JMB CHECKED BY A. CENTORE
PROJECT No. 191-3(8) 9-67
SHEET 176 OF 605 BR. 107

BR 8

IRASBURG
IM DECK(46)
BRIDGE NO. 107N
SHEET 32 OF 45
FOR REFERENCE ONLY

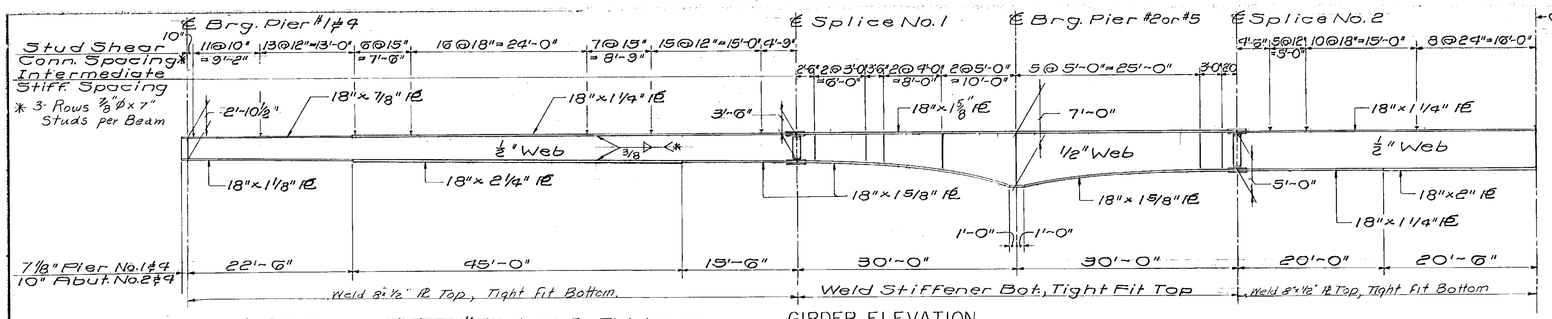

* For Flange Plates 1 1/2" or Less In Thickness 5/16" Fillet Welds Shall Be Used.

GIRDER ELEVATION
SCALE: 1/8" = 1'-0"

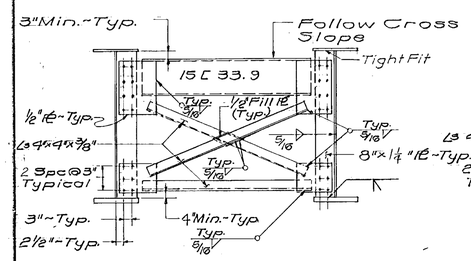

PIERS 2,3,5 & 6
END CROSS FRAME
SCALE: 1/2" = 1'-0"

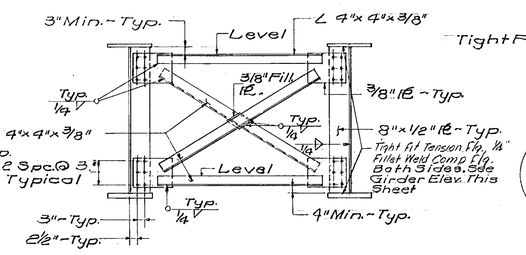

PLATE GIRDER
INTERMEDIATE CROSS FRAME
SCALE: 1/2" = 1'-0"

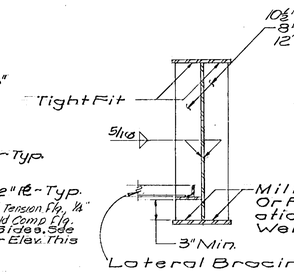

BEARING STIFFENER DETAIL
N.T.S.

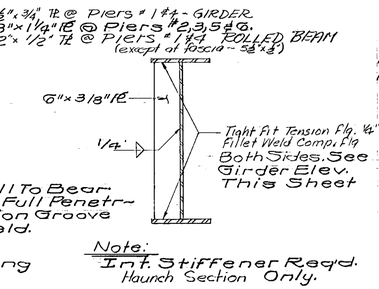

INTERMEDIATE STIFFENER DETAIL
N.T.S.

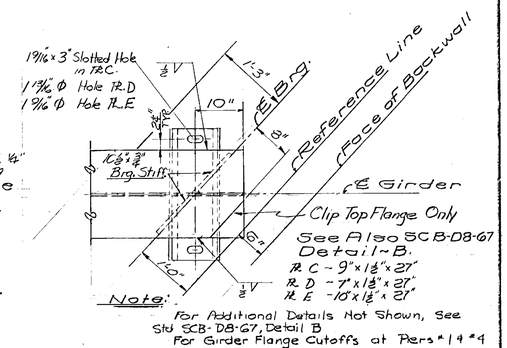

DETAIL OF GIRDER AT ABUT. 2 & 4
SCALE: 1" = 1'-0"

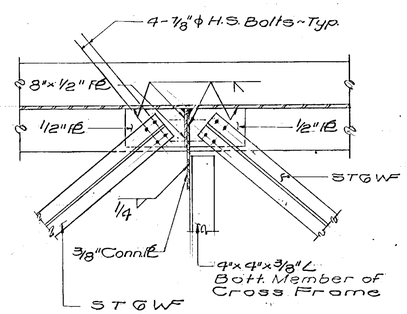

DETAIL-A
SCALE: 1" = 1'-0"

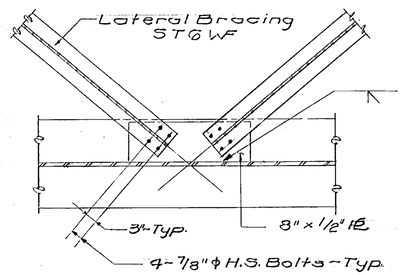

DETAIL-B
SCALE: 1" = 1'-0"

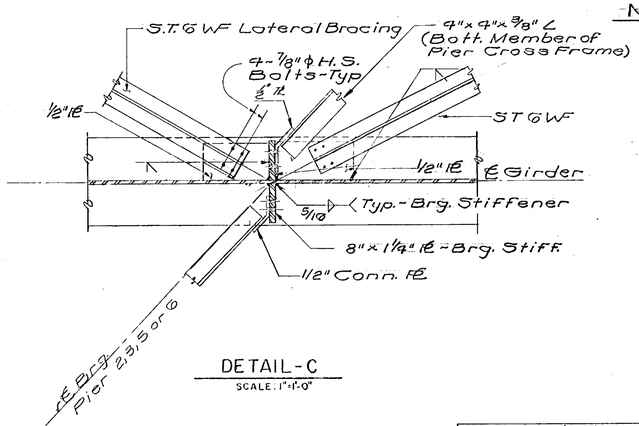

DETAIL-C
SCALE: 1" = 1'-0"

NOTES:

1. Intermediate Stiffeners Shall Be Placed on Alternate Sides of Girder Web. Intermediate Stiffeners Shall Not Be Placed on The Outside Face of The Fascia Girder.
2. Bearing and Intermediate Stiff. and Ends of Girders Shall Be Vertical After Application of Full Dead Load.
3. For Detail of Beam at Abutments No. 1 & 3 See Std. SCB-D-9 67- Detail "A".
4. Omit Int. Stiffeners at cross frame locations.

Δ Cross frame Conn & Flg PL thickness Rev RCH 8-27-69 Changed 3/8" Web to 1/2" Web. Removed Int Stiff. Added Cutoff Detail to Flange at Abut 2 & 4. Changed Brg. Stiff Sizes. Revised Connection at Detail C. Added Brg. Stiff. at Abut 2 & 4. PL Rev 5-4-69	STATE OF VERMONT DEPARTMENT OF HIGHWAYS PROJECT IRASBURG-DERBY TOWN OF IRASBURG ROUTE NO. I-91 LOG STA. 2539± I-91 OVER BARTON RIVER AND S.A. #3 GIRDER ELEVATION & CONN. DETAILS SCALE AS NOTED IN CHARGE C. TERENZIO DRAWN BY JMB CHECKED BY A. CENTORE PROJECT NO. I-91 3(8) 9-67 SHEET 177 OF 605 BR.108

BR 3

IRASBURG
IM DECK(46)
BRIDGE NO. 107N
SHEET 33 OF 45
FOR REFERENCE ONLY

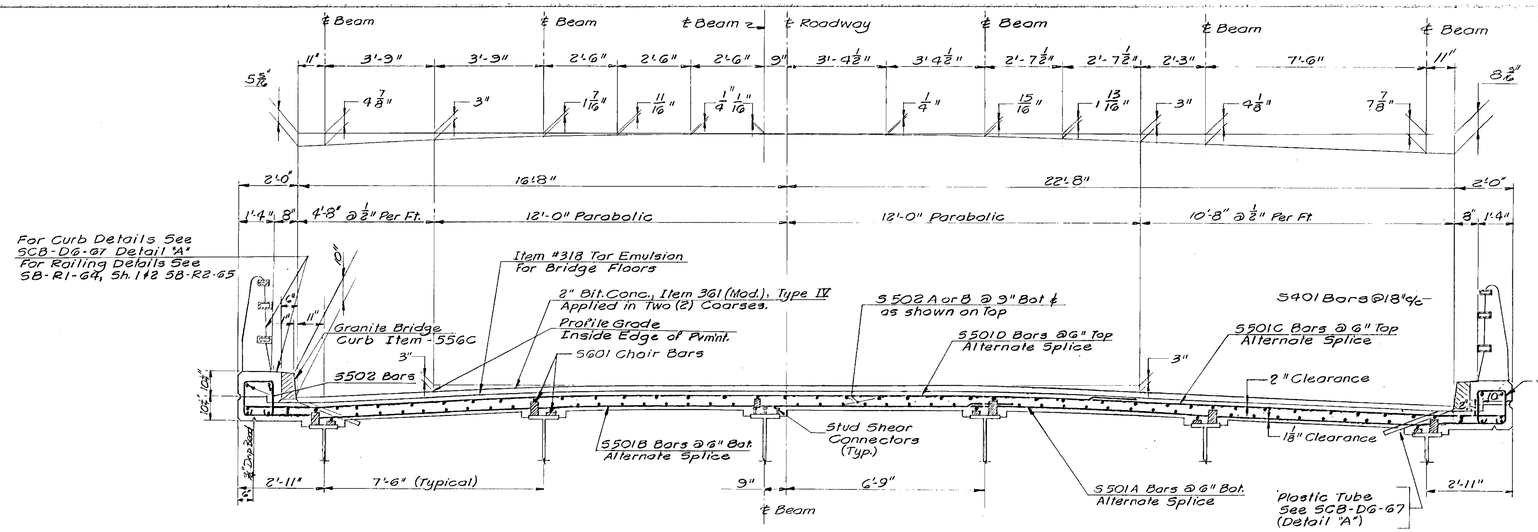

TYPICAL DECK SECTION
(NORTHBOUND SHOWN)
SCALE : 1/2" = 1'-0"

Floor Slab to be concrete, class AA 8" thick, dapped as shown at Beam Haunch, Surface to be finished with a self-propelled concrete finishing machine. Partial parabolic crown, as per detail, to be obtained by stepping bridge seats. Cut S501 Transverse Bars at skew end and use cut off on opposite end.

Note: Water Repellent, Item 490 Shall Be Used on Top of Safety-Walk And on The Fascia And Back To The Fascia Beam Under The Slab.

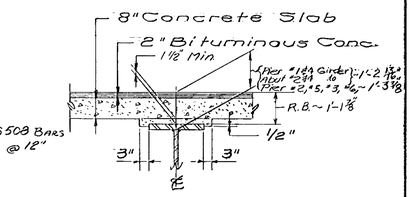

BEAM HAUNCH DETAIL
N. T. S.

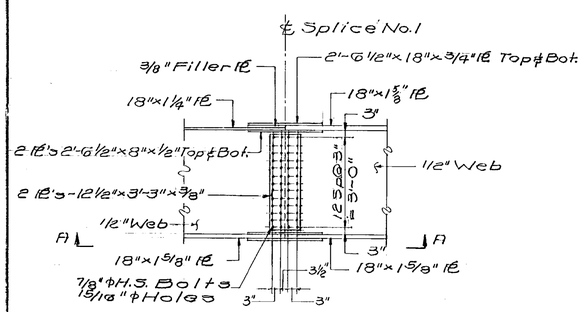

SPLICE NO. 1
SCALE: 1/2" = 1'-0"

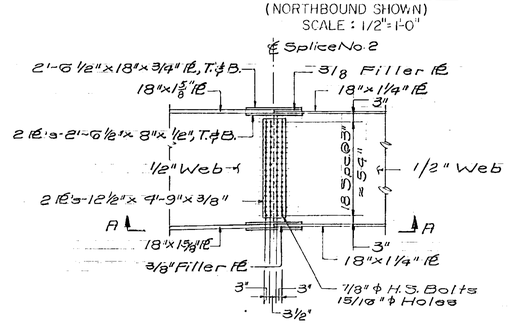

SPLICE NO. 2
SCALE : 3/8" = 1'-0"

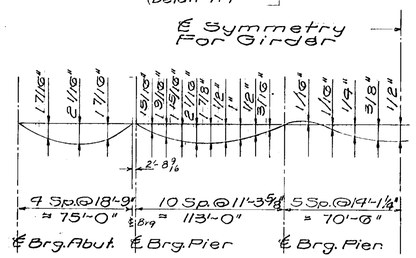

TOTAL DEAD LOAD DEFLECTIONS
N.T.S.

SUPERSTRUCTURE NOTES:

1. For general notes and design stresses see std. sh. SCB-D1-67
2. For details of shear connectors see std. sh. SCB-D2-67
3. For bearing details at abutments see std sh. SCB-D8-67 & Br 111 & Br 108.
4. All cover plate welds to be ⅛" Fillet continuous shop welds.
5. All field connections to be made with ⅞" ϕ High Strength Bolts with ⅞" ϕ Holes.
6. Structural Steel shall be AASTM A-36-62T unless otherwise noted.
7. Scuppers to be placed @ 50' (±) except as noted. Do not place above SA 3 or Railroad.
8. For curtain wall details, Approach Slab bracket details, See SCB-D2-67, Detail A.

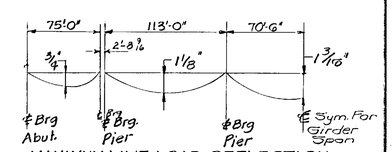

MAXIMUM LIVE LOAD DEFLECTION
NOT TO SCALE

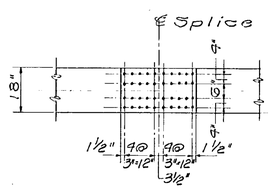

VIEW A-A
SCALE: 1/2" = 1'-0"

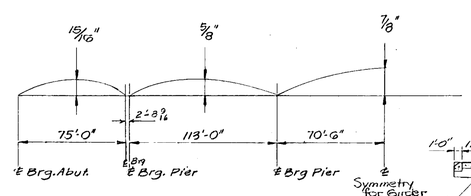

PERMANENT CAMBER AFTER DEAD LOAD IS APPLIED

CAMBER DIAGRAM
NOT TO SCALE

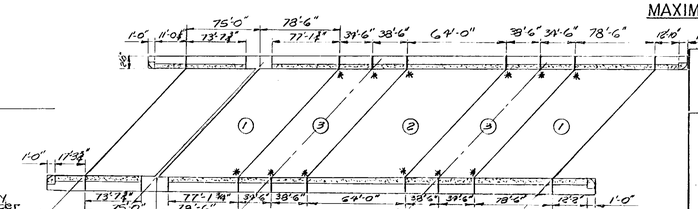

CURB GEOMETRY AND CONCRETE PLACING DIAGRAM
NOT TO SCALE

* - For Curb Joint Detail See BR 118
For Detail at Pier 1 & 4 See BR 110
For Detail at Abut 1 & 3 See BR 117
For Detail at Abut 2 & 4 See BR 116

Changed to ⅛" & ⅜" web & shear connectors changed to 3 per line

Changed Roadway width from 38'-0" to 39'-4". Changed curb width from 2'-8" to 2'-0" 12 Feb. 7/24/69

BR 109 of 129

STATE OF VERMONT
DEPARTMENT OF HIGHWAYS

PROJECT IRASBURG-DERBY
TOWN OF IRASBURG
ROUTE No. I-91 STA. 2539±
I-91 OVER BARTON RIVER AND SA 3
DECK SECTION AND SPLICE
SCALE AS NOTED
IN CHARGE C. TERENZIO
DRAWN BY JMB CHECKED BY A. CENTORE
PROJECT No. 191-3(8) 9-67
SHEET 178 OF 605 BR. 109

IRASBURG
IM DECK(46)
BRIDGE NO. 107N
SHEET 34 OF 45
FOR REFERENCE ONLY

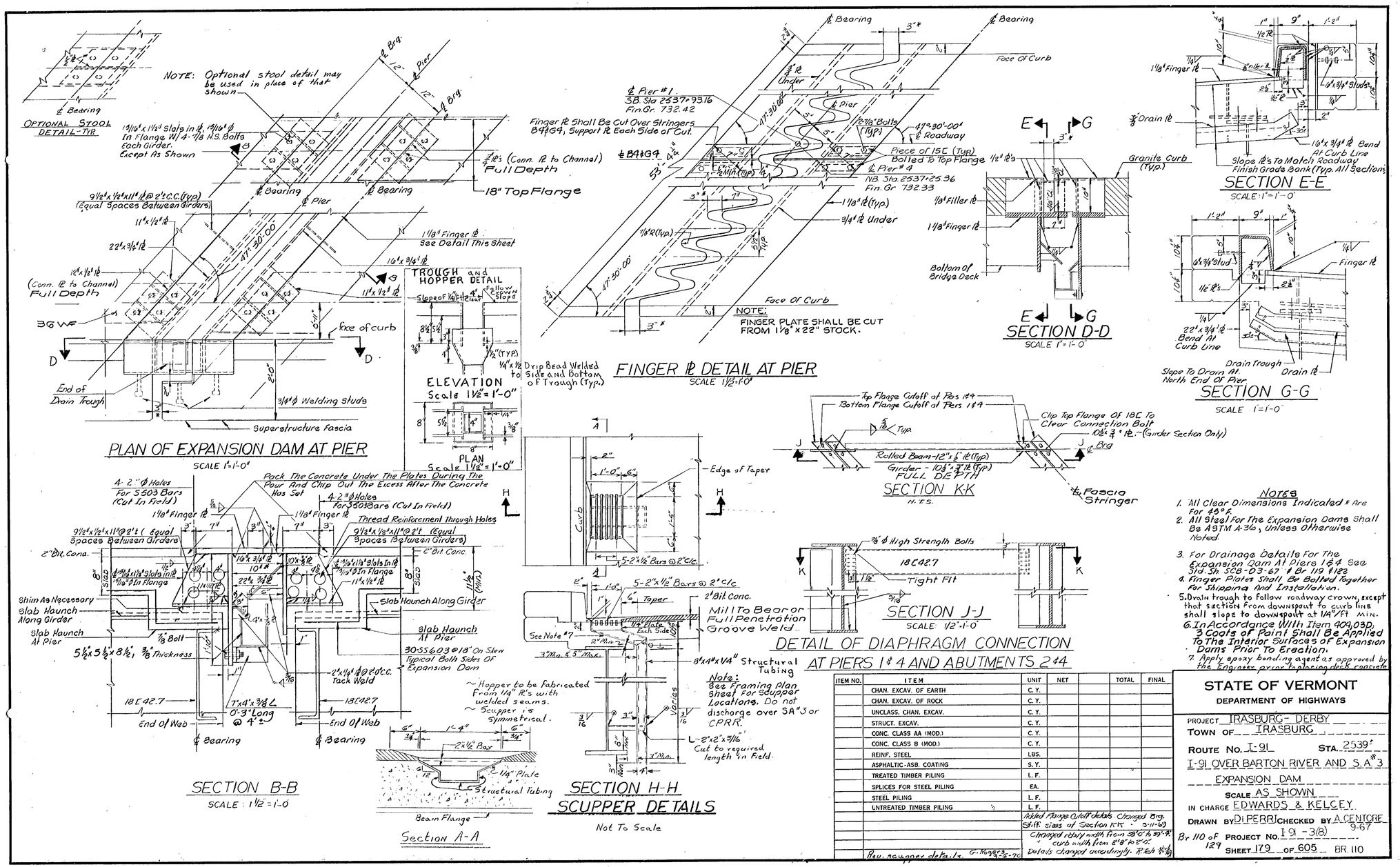

NOTES

1. All Clear Dimensions Indicated * Are For 48°F.
2. All Steel For The Expansion Dams Shall Be ASTM A-36, Unless Otherwise Noted.
3. For Drainage Details For The Expansion Dam At Piers 1 & 4 See Std. Sh. 308-03-67 & Br 110 #123
4. Finger Plates Shall Be Bolted Together For Shipping And Installation.
5. Drain trough to follow roadway crown, except that sections from downspout to curb line shall slope to downspout at 1¼"/ft min.
6. In Accordance With Item 409.03D, 3 Coats of Paint Shall Be Applied To The Interior Surfaces of Expansion Dams Prior To Erection.
7. Apply epoxy bonding agent as approved by the Engineer prior to placing deck concrete.

ITEM NO.	ITEM	UNIT	NET		TOTAL	FINAL
	CHAN. EXCAV. OF EARTH	C.Y.				
	CHAN. EXCAV. OF ROCK	C.Y.				
	UNCLASS. CHAN. EXCAV.	C.Y.				
	STRUCT. EXCAV.	C.Y.				
	CONC. CLASS AA (MOD.)	C.Y.				
	CONC. CLASS B (MOD.)	C.Y.				
	REINF. STEEL	LBS.				
	ASPHALTIC-ASB. COATING	S.Y.				
	TREATED TIMBER PILING	L.F.				
	SPLICES FOR STEEL PILING	EA.				
	STEEL PILING	L.F.				
	UNTREATED TIMBER PILING	L.F.				

Added Flange Cutoff details Changed Brg. Stiff. sizes of Section K-K - 5-11-00
Changed roadway width from 38'0" to 39'-4" curb width from 2'8" to 2'0" Details changed accordingly. R. Rich 11-6-
Rev. scupper details. G. Hogg 3-26-70

STATE OF VERMONT
DEPARTMENT OF HIGHWAYS

PROJECT IRASBURG - DERBY
TOWN OF IRASBURG
ROUTE NO. I-91 STA. 2539±
I-91 OVER BARTON RIVER AND S.A.#3
EXPANSION DAM
SCALE AS SHOWN
IN CHARGE EDWARDS & KELCEY
DRAWN BY DIPERRI CHECKED BY A.CENTORE 9-67
Br 110 of 129 PROJECT NO. I 91 -3(8)
SHEET 179 OF 605 BR 110

IRASBURG
IM DECK(46)
BRIDGE NO. 107N
SHEET 35 OF 45
FOR REFERENCE ONLY

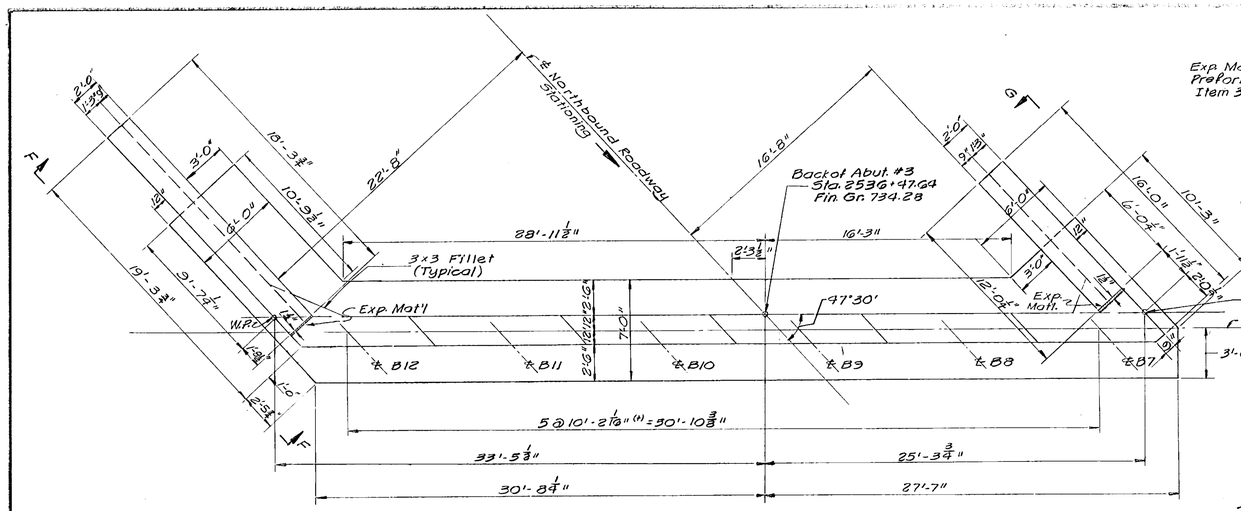

PLAN

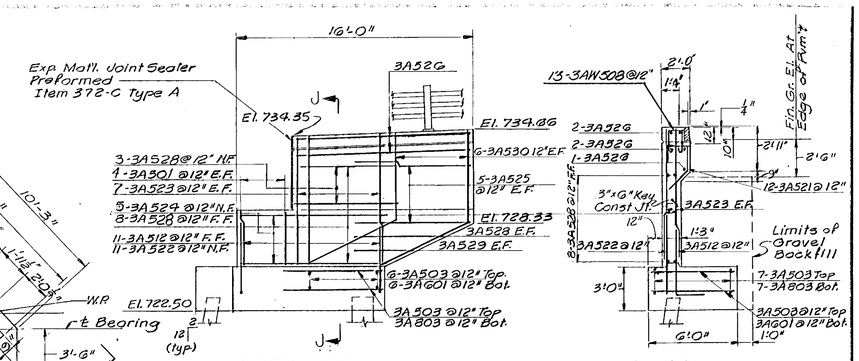

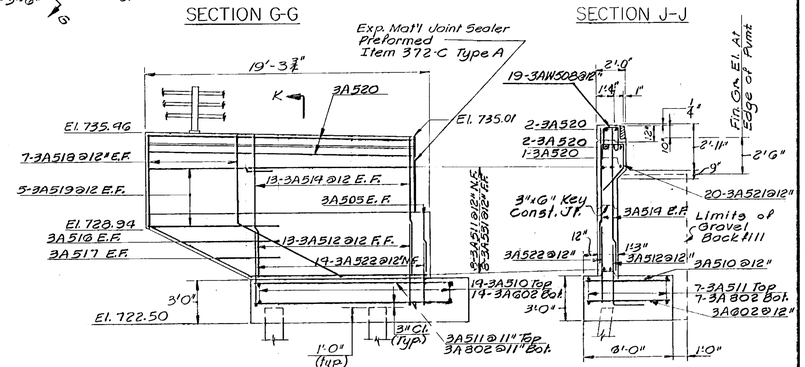

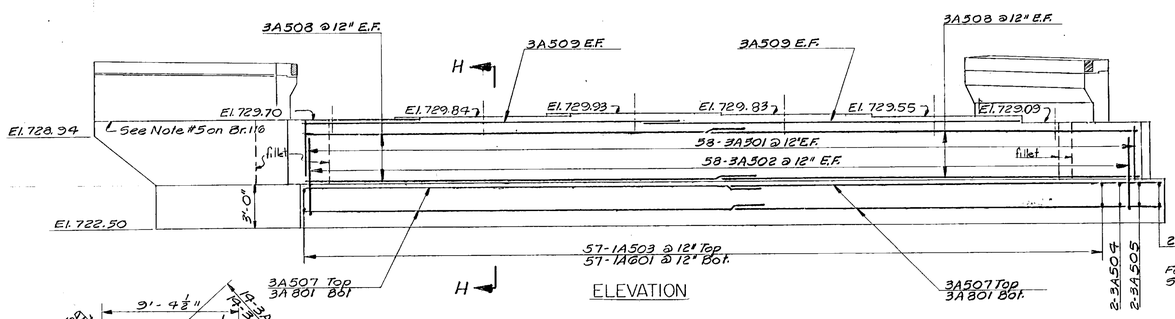

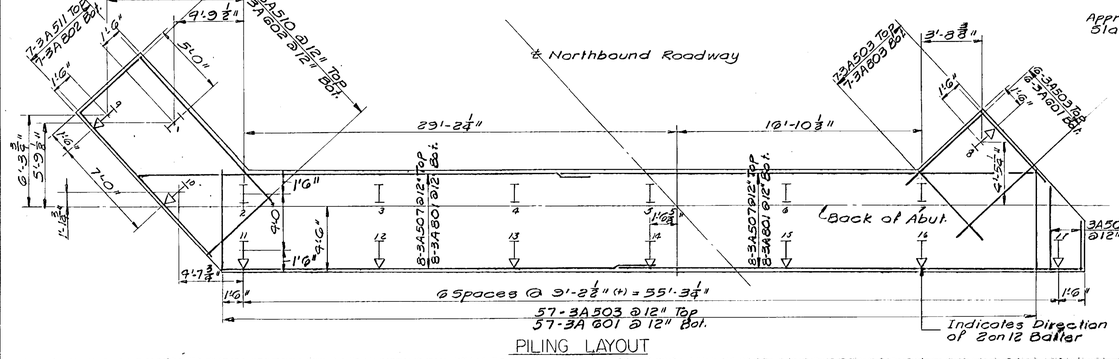

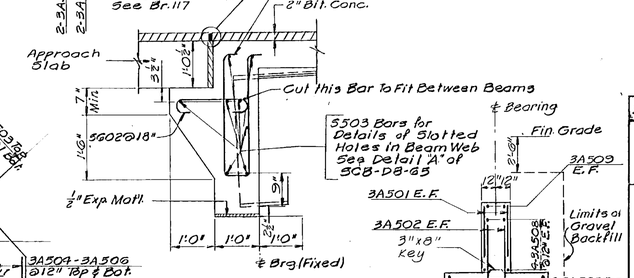

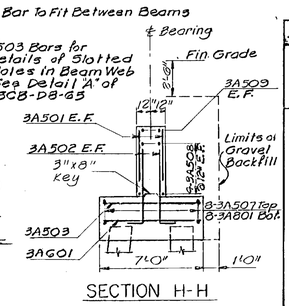

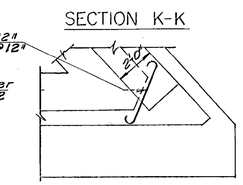

1 Same changes as BR 112

STATE OF VERMONT
DEPARTMENT OF HIGHWAYS

PROJECT IRASBURG-DERBY
TOWN OF IRASBURG
ROUTE No. I-91 STA. 2539 ±
I-91 OVER BARTON RIVER AND S.A. #3
ABUTMENT #3
SCALE 1/4" = 1'-0" Except as Noted
IN CHARGE C. TERENZIO
DRAWN BY J.M.B. CHECKED BY A. CENTORE
PROJECT No. I 91-3(8) 9-67
SHEET 183 OF 605 BR 114

BR 8

IRASBURG
IM DECK(46)
BRIDGE NO. 107N
SHEET 36 OF 45
FOR REFERENCE ONLY

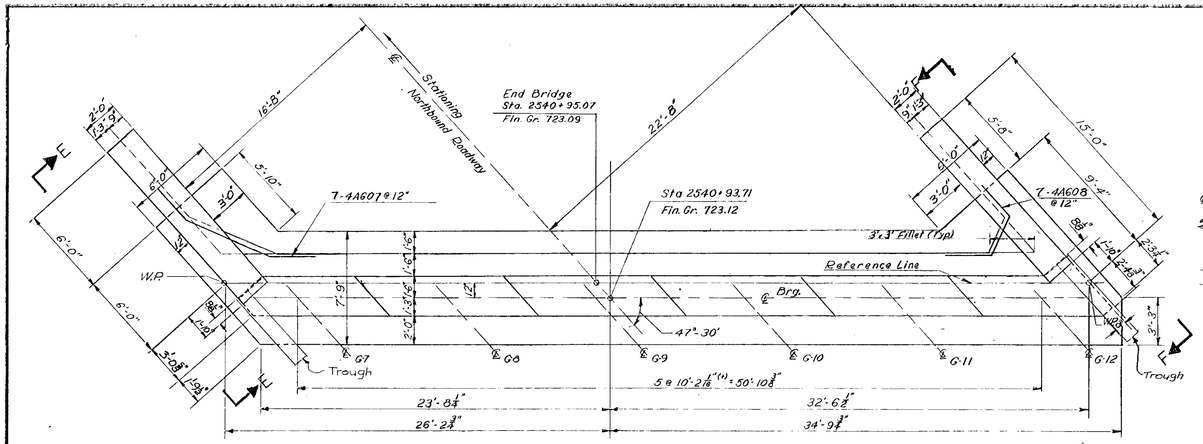

PLAN
1/4" = 1'-0"

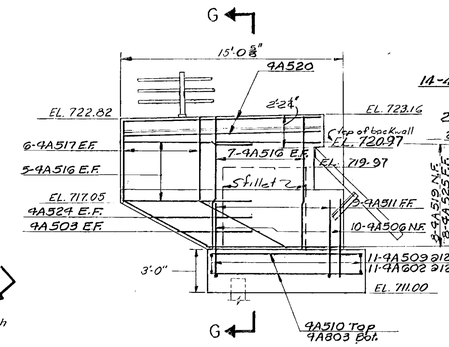

SECTION E-E
1/4" = 1'-0"

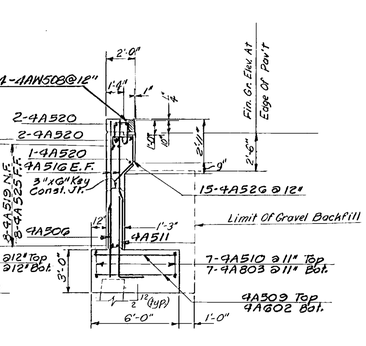

SECTION G-G
1/4" = 1'-0"

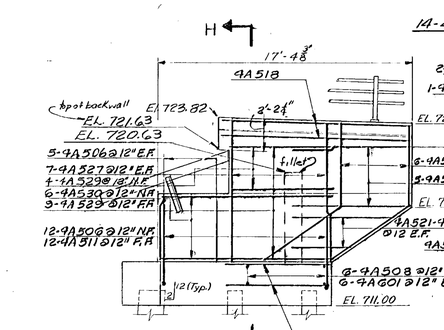

SECTION F-F
1/4" = 1'-0"

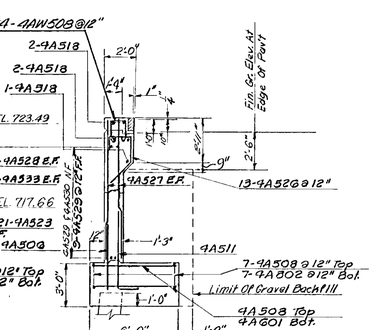

SECTION H-H
1/4" = 1'-0"

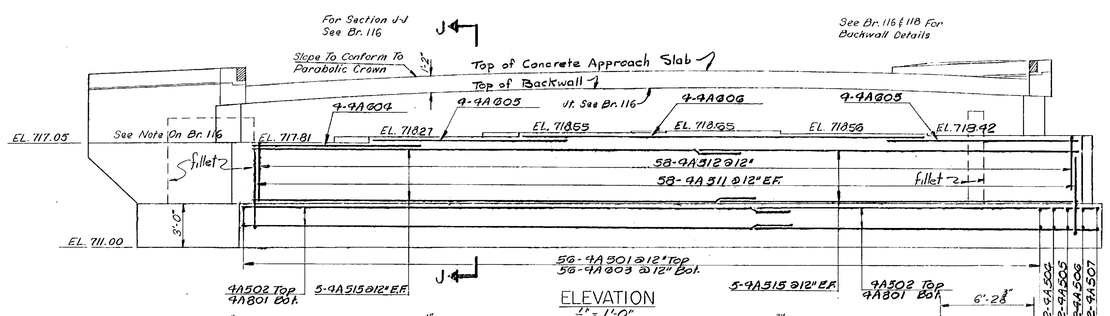

ELEVATION
1/4" = 1'-0"

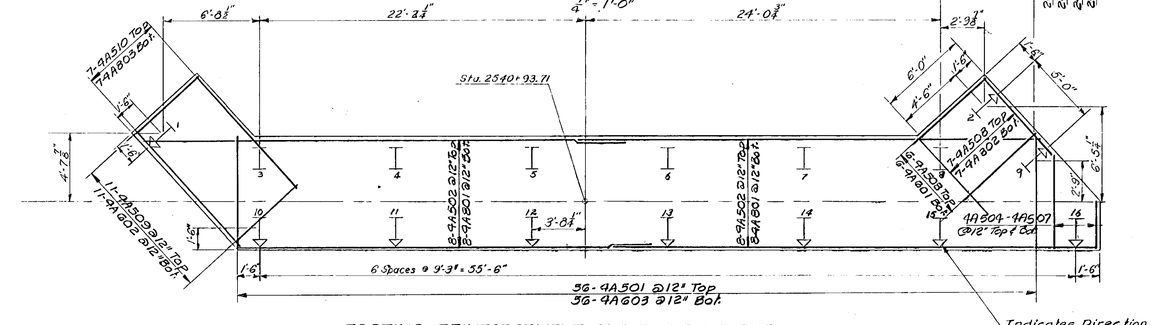

FOOTING REINFORCEMENT AND PILING LAYOUT
1/4" = 1'-0"

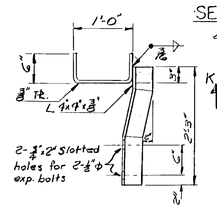

SECTION-LL
1" = 1'-0"

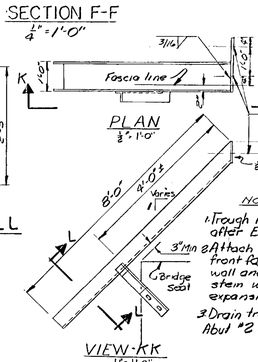

NOTES

1. Trough is to be set after Exp Dam.
2. Attach trough to front face of back wall and side of stem with expansion bolts.
3. Drain trough at Abut #2 is similar

DRAIN TROUGH DETAILS

1	Same changes as on BR 113 - R Toto 3/69 Added Detail of Drain Trough - 2-1-69

STATE OF VERMONT
DEPARTMENT OF HIGHWAYS

PROJECT IRASBURG-DERBY
TOWN OF IRASBURG
ROUTE NO. I-91 STA. 2539 ±
I-91 OVER BARTON RIVER AND SA #3
ABUTMENT #4
SCALE AS SHOWN
IN CHARGE C. TERENZIO
DRAWN BY D.L. CHECKED BY A. CENTORE
PROJECT NO. I91-3(8) 9-67
SHEET 184 OF 605 BR 115

BR 8

IRASBURG
IM DECK(46)
BRIDGE NO. 107N
SHEET 37 OF 45
FOR REFERENCE ONLY

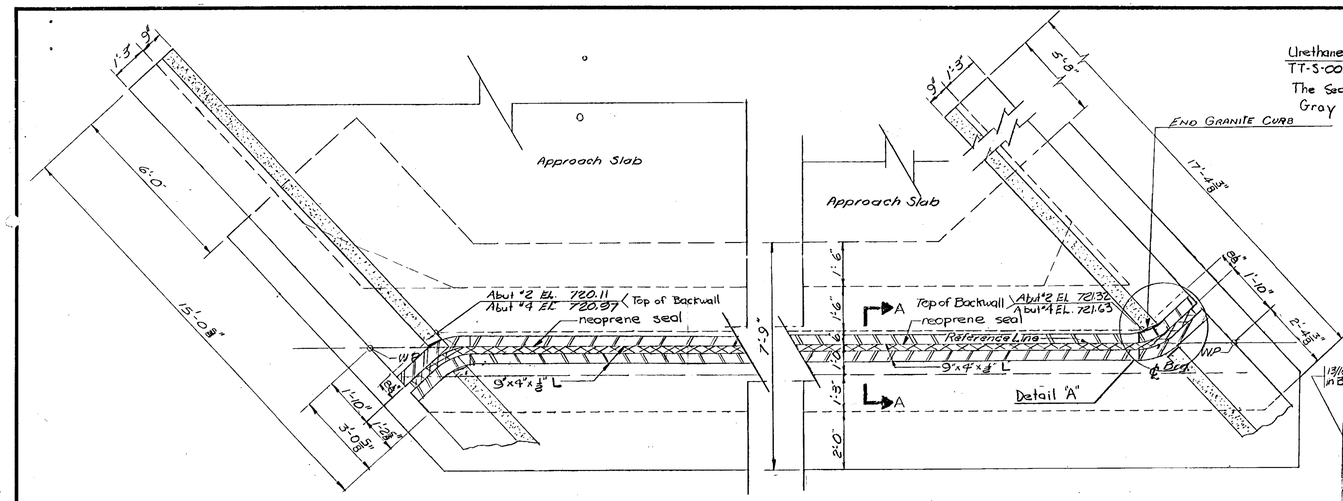

PLAN ABUTMENTS 2&4

SCALE: 1/2"=1'-0"

Urethane Joint Sealer Shall Conform To Federal Spec. TT-S-00227 D, Class A. Use Primer Furnished by The Sealer Manufacturer. Sealer to be Gray Color.

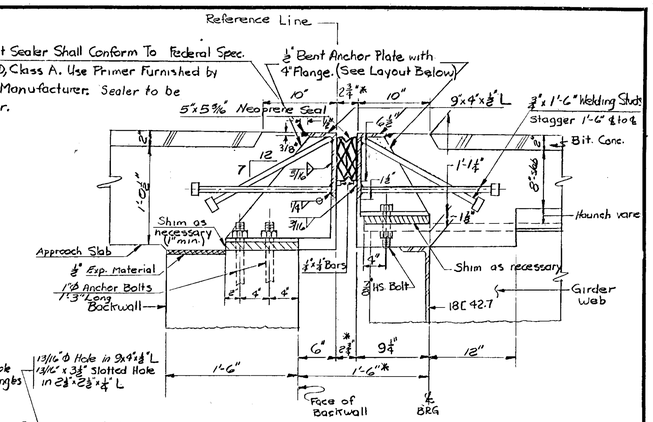

SECTION-A A

1½"=1'-0"

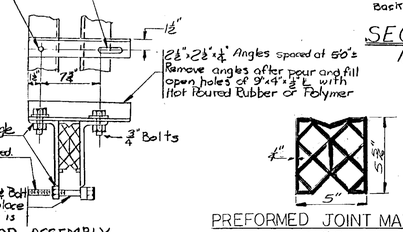

SHOP ASSEMBLY

NOTE: All dimensions indicated * are for 45°F

PREFORMED JOINT MATERIAL

N.T.S.

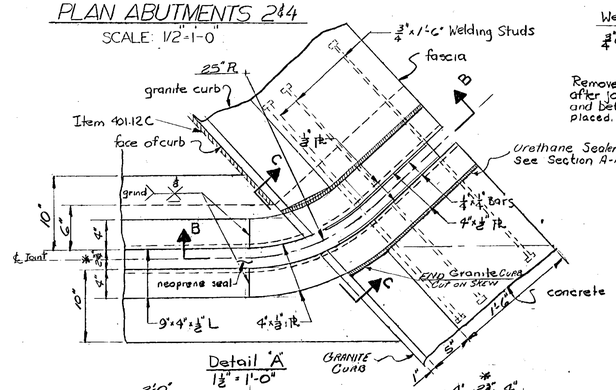

Detail "A"

1½"=1'-0"

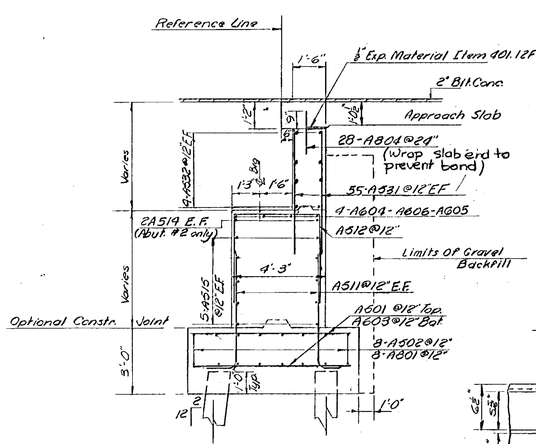

SECTION J-J

ABUTMENTS 2&4 TYPICAL SECTION

SCALE: 3/8"=1'-0"

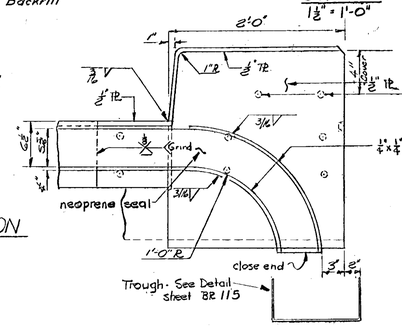

Section-BB

1½"=1'-0"

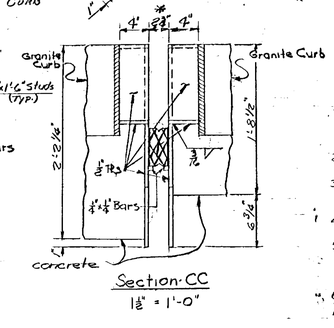

Section-CC

1½"=1'-0"

General Abutment Notes

1. For Estimated Length Of Piles And No. Of Splices See Br. 113.
2. Abutments Are Designed For A Maximum Pile Bearing Pressure Of 38 Tons.
3. All Reinforcing To Have Minimum Cover Of 2" Except 3" In Footing.
4. For Details Of Const. Jts. See Std. Sh. SCB-D6-67 Detail B.
5. No Concrete Shall Be Placed Above Adjacent Bridge Seat Elevation Until Girders Have Been Profiled And Final Finish Grade Established By The Engineer.
6. Four (4) Inch Diameter Weep Holes Shall Be Provided In All Abutments, Wings And Walls. Weep Holes Shall Be Spaced Not Over Ten (10) Feet Center To Center And So Placed To Provide Adequate Drainage For Backfill.

Notes For Abutments 2&4

1. The Front Face of The Backwall From the Edge of The Steel Angle For The Joint To The Bridge Seat Shall Be Coated With Paint Waterproofing, Item 410. All Exposed Surfaces Not Otherwise Coated Shall Be Covered With Water Repellant, Item 440.

Expansion Joint Notes

1. The Entire Expansion Joint And All Necessary Material And Labor to Install And Adequately Anchor The Expansion Joint Shall Be Included In Item 439A Elastomeric Bridge Deck Expansion Joint.
2. The Expansion Joint Shall Be Entirely Shop Fabricated and Assembled As Indicated On The Plans.
3. Prior To Fabrication, Shop Drawings Shall Be Submitted In Quadruplicate To The State of Vermont, Department of Highways, Bridge Engineer For Approval.
4. The Drain Trough And The Necessary Hanger Shall Be Paid For As Structural Steel Item 409-A See Sheet BR. 115
5. The Neoprene Seals Shall Be Bonded To The Steel Members With An Approved Adhesive. Prior to Bonding, All Steel Surfaces Must be Sandblasted.
6. Design Movement: Compress 5/8" Extend 5/8" From 45°F
7. A Qualified Representative Of The Joint Manufacturer Shall Be On The Project At The Time Of Installation To Ensure Proper Procedures Are Followed.
8. All Steel To Be ASTM A-36.

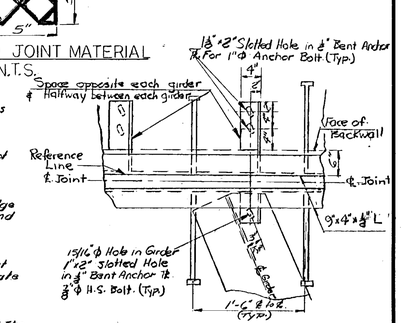

Anchor Plate Layout

N.T.S.

Changed Curb from 2'8" to 2'0" Installed Preformed Expansion Joint — R. Toth 6-10-6

STATE OF VERMONT
DEPARTMENT OF HIGHWAYS

PROJECT IRASBURG-DERBY
TOWN OF IRASBURG
ROUTE NO. I-91 STA. 2.539±
I-91 OVER BARTON RIVER AND SA #3
ABUTS. 2&4 DETAILS
SCALE AS SHOWN
IN CHARGE C. TERENZIO
DRAWN BY S. CURRAN CHECKED BY A. CENTORE 9-67
PROJECT NO. 191-3(8)
SHEET 185 OF 605 BR. 116

IRASBURG
IM DECK(46)
BRIDGE NO. 107N
SHEET 38 OF 45
FOR REFERENCE ONLY

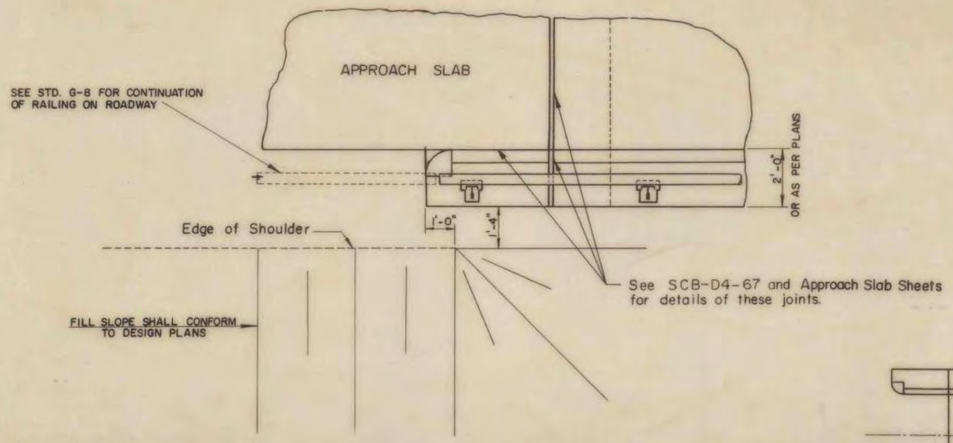

PLAN AT ABUTMENT

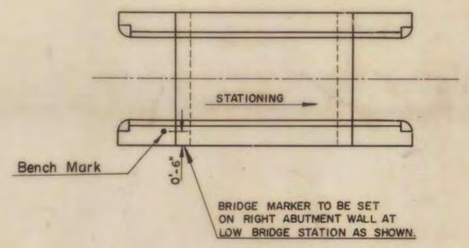

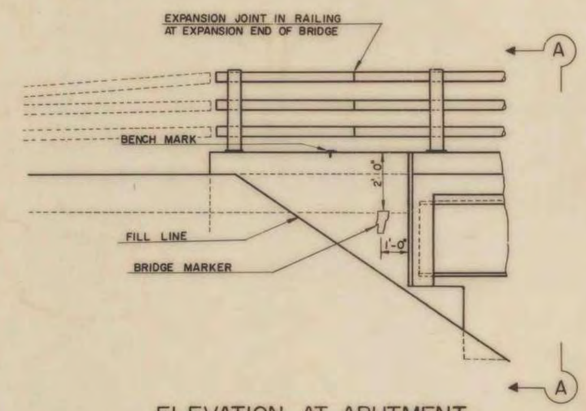

ELEVATION AT ABUTMENT

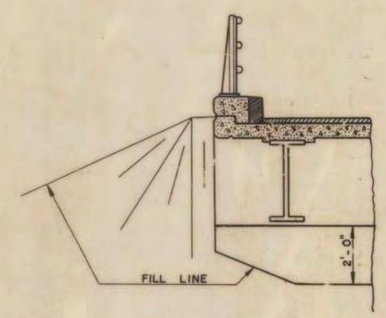

SECTION A-A

GENERAL NOTES

ALL MATERIALS AND CONSTRUCTION SHALL CONFORM TO STATE OF VERMONT, DEPARTMENT OF HIGHWAYS, STANDARD SPECIFICATIONS FOR HIGHWAY AND BRIDGE CONSTRUCTION, DATED APRIL 1964, AND T A.A.S.H.O. STANDARD SPECIFICATIONS FOR HIGHWAY BRIDGES, DATED 1965 AND ITS LATEST REVISIONS. DESIGN IS FOR HS20-44 LOADING MODIFIED FOR THE NATIONAL SYS OF INTERSTATE HIGHWAYS, APPLIED IN ACCORDANCE WITH THE PROVISIONS OF A.A.S.H.O. STANDARD SPECIFICATIONS.

THE FOLLOWING NOTES SHALL APPLY UNLESS OTHERWISE NOTED ON PROJECT PLANS.

1. ALL STRUCTURAL STEEL SHALL CONFORM TO A.S.T.M. DESIGNATION A-36 . ALL FIELD CONNECTIONS SHALL BE MADE WITH 7/8" Ø A.S.T.M. A325 BOLTS IN 15/16" Ø HOLES. WHERE CONNECTIONS ARE NOT DETAILED ON THE PLANS THEY SHALL BE DETAILED BY THE FABRICATOR AND SUBMITTED TO THE STATE FOR APPROVAL.
2. SIMPLE BEAMS SHALL BE CAMBERED FOR THE DEAD LOAD DEFLECTION PLUS ONE-EIGHTH (1/8) INCH FOR EACH TEN FEET OF SPAN OR FRACTION THEREOF. THE CAMBER SHALL APPROXIMATE A SIMPLE CIRCULAR CURVE FROM END TO END OF BEAM. TOLERANCES IN CAMBER SHALL BE AS INDICATED IN THE A.I.S.C. HANDBOOK FOR ROLLED BEAMS AND AS INDICATED IN THE A.W.S. SPECIFICATIONS FOR WELDED GIRDERS.
3. THE DIMENSIONS OF WELDED STRUCTURAL MEMBERS SHALL BE WITHIN THE LIMITS SET UP IN PARAGRAPH 407, DIMENSIONAL TOLERANCES AWS D2.0-66, "SPECIFICATIONS F WELDED HIGHWAY AND RAILWAY BRIDGES ".
4. AFTER SUPERSTRUCTURE STEEL HAS BEEN ERECTED, ELEVATIONS AT INTERVALS ALONG THE TOP OF THE ERECTED BEAMS SHALL BE TAKEN UNDER THE DIRECTION OF THE ENGINEER FOR USE IN DETERMINING THE FINAL GRADE.
5. SCUPPERS SHALL BE USED ONLY WHEN INDICATED ON THE PROJECT PLANS. THEY SHALL BE PLACED MIDWAY BETWEEN INTERMEDIATE DIAPHRAGMS. ON SUPERELEVATED BRID PLACE SCUPPERS ON LOW SIDE ONLY. PAYMENT FOR SCUPPERS SHALL BE AT THE UNIT PRICE BID FOR STRUCTURAL STEEL, ITEM 404-A.
6. CHANNEL SHEAR CONNECTORS MAY BE SUBSTITUTED FOR THE STUDS SHOWN ON THE STANDARDS. DETAILS OF SHEAR CONNECTORS SHALL BE SUBMITTED TO THE STATE FOR APPROVAL.
7. THE FINAL COAT OF FIELD PAINT SHALL BE GREEN.
8. ALL CONCRETE IN THE SUPERSTRUCTURE SHALL BE CLASS AA, MODIFIED. ALL EXPOSED EDGES OF CONCRETE IN THE SUBSTRUCTURE AND SUPERSTRUCTURE SHALL BE CHAMFE 1" X 1".
9. SLAB REINFORCING STEEL FOR SKEWED BRIDGES SHALL BE MODIFIED FROM THAT INDICATED ON THE STANDARDS FOR SQUARE SPANS AS FOLLOWS:
   A. TRANSVERSE BARS SHALL BE FURNISHED AS FOR A SQUARE SPAN. THESE BARS SHALL BE CUT IN THE FIELD TO FIT ONE END, WITH CUT-OFF BARS USED AT THE OPPOSITE END OF THE SPAN.
   B. THE S506 BARS SHALL BE LENGTHENED.
   C. THE QUANTITY OF S402 AND S 602 BARS SHALL BE INCREASED.
   D. S506 AND S507 BARS SHALL BE INCREASED.
10. SPIRAL COLUMN REINFORCEMENT SHALL CONFORM TO A.A.S.H.O. SPECIFICATION M-32 COLD DRAWN STEEL WIRE FOR CONCRETE REINFORCEMENT.
11. MINIMUM COVER FOR REINFORCING STEEL SHALL BE 2" MEASURED FROM THE CONCRETE SURFACE TO THE FACE OF THE REINFORCEMENT.
12. LAYOUT AND DETAIL DRAWINGS FOR GRANITE BRIDGE CURB, ITEM 556-C, SHALL BE SUBMITTED IN TRIPLICATE TO THE STATE OF VERMONT FOR APPROVAL PRIOR TO FABRI- CATION AND SHIPMENT. GRANITE CURB ENDS SHALL BE SAWED ON EACH SIDE OF ALL JOINTS WHERE JOINT SEALER - PREFORMED, ITEM 372-C IS USED OR WHERE THE CUR BUTTS A METAL EXPANSION JOINT. GRANITE CURB SHALL BE FURNISHED IN RANDOM LENGTHS RANGING FROM 4' MINIMUM TO 10' MAXIMUM.
13. WATER REPELLENT, ITEM 440, SHALL BE APPLIED TO ALL EXPOSED CONCRETE SURFACES NOT OTHERWISE TREATED IN BOTH SUPERSTRUCTURE AND SUBSTRUCTURE, EXCEPT FO THAT PORTION OF THE DECK SLAB AND CURTAIN OR BACKWALLS BETWEEN FASCIA BEAMS
14. TOP SURFACES OF ALL PIERS AND ABUTMENTS SHALL BE SLOPED 1/2" PER FOOT EXCEPT UNDER BEARING PLATES WHERE THE SURFACES SHALL BE LEVEL. ABUTMENT BRIDGE SEATS SHALL BE SLOPED FROM THE FRONT EDGE OF THE CURTAIN WALL OR BACKWALL, AND PIER BRIDGE SEATS SHALL BE SLOPED FROM THE CENTERLINE OF PIER.
15. THE ENTIRE EXPOSED TOP SURFACE OF THE ABUTMENTS AND PIERS, EXCEPT THE TOP OF ABUTMENT WINGS SHALL BE COATED WITH ASPHALTIC-ASBESTOS COATING ITEM 407. THIS ITEM SHALL BE APPLIED AFTER ALL PAINTING AND INCIDENTAL ITEMS ARE COMPLETED.
16. ALL EXPANSION MATERIAL SHALL CONFORM TO A.A.S.H.O. DESIGNATION M153, AND SHALL NOT CONTAIN ASPHALT OR BITUMINOUS MATERIAL.
17. WHERE BITUMINOUS CONCRETE PAVEMENT IS CALLED FOR AS A WEARING SURFACE ON BRIDGE DECKS AND APPROACH SLABS, IT SHALL BE TYPE IV MIX APPLIED IN TWO COURSES.
18. BORINGS INDICATED ON THE DRAWINGS HAVE BEEN MADE FOR DESIGN PURPOSES ONLY AND ARE NOT WARRANTED TO SHOW ACTUAL SUB-SURFACE CONDITIONS.
19. ALL DIMENSIONS ARE HORIZONTAL OR VERTICAL.
20. ALLOWABLE DESIGN STRESSES:

    CONCRETE: $F'C = 3{,}000$ P.S.I. FC = 1,200 P.S.I.

    STRUCTURAL STEEL: FS = 20,000 P.S.I. - A36 (ALL OTHER STEELS AS PER A.A.S.H.O. SPECIFICATIONS)

    REINFORCING STEEL: FS = 20,000 P.S.I. TENSION

    FS = 16,000 P.S.I. COMPRESSION
21. WHEN PILE SUPPORTED SUBSTRUCTURES ARE PLACED ON EMBANKMENTS, THE CONSTRUCTION PROCEDURE OUTLINED UNDER ITEM 503, ARTICLE 503.03A SHALL BE FOLLOWED. MATERIAL REMOVED WITHIN THE SIX (6) INCH DEPTH SHALL BE PAID FOR AS STRUCTURE EXCAVATION, ITEM 109.

Revised date

IRASBURG
IM DECK(46)
BRIDGE NO. 107N
SHEET 39 OF 45
FOR REFERENCE ONLY

REVISIONS AND CORRECTIONS

DRAWN BY:	W. T.	JAN. 1965
RETRACED BY	AJA	MAY 1967
CHECKED BY:	W.M. Smith	DEC. 1967
RECOMMENDED FOR APPROVAL	BRIDGE ENGINEER	
RECOMMENDED FOR APPROVAL	CONSTRUCTION ENGINEER	1-24-68
RECOMMENDED FOR APPROVAL	ASST. CHIEF ENGINEER	1-24-68
APPROVED BY:	CHIEF ENGINEER	DATE

DETAILS OF WF BEAM BRIDGES
GENERAL INFORMATION AND GENERAL NOTES

VERMONT
DEPARTMENT OF HIGHWAYS
STRUCTURE STANDARDS

SCB-DI-67

242A 242A

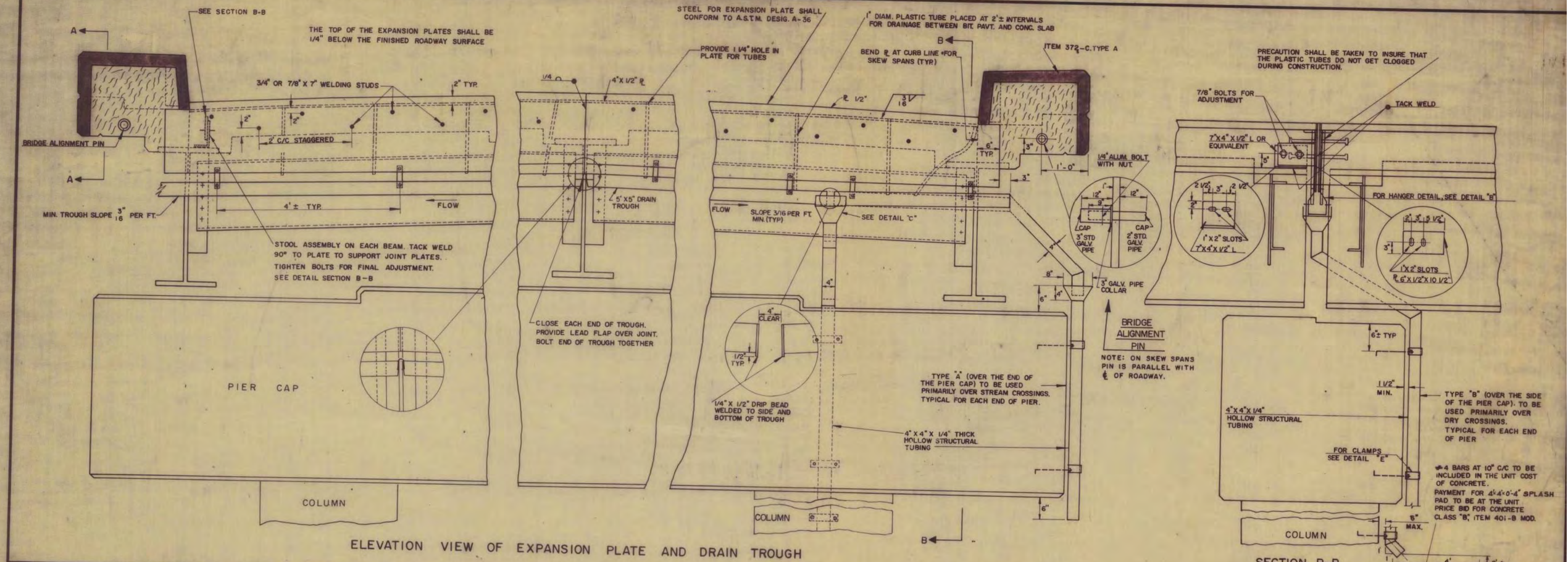

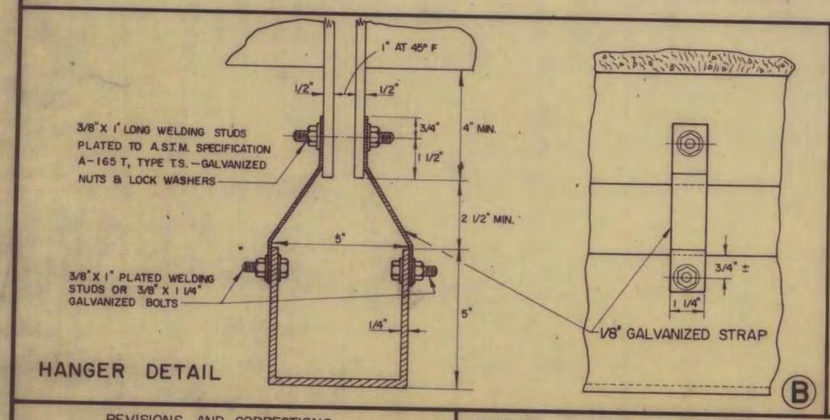

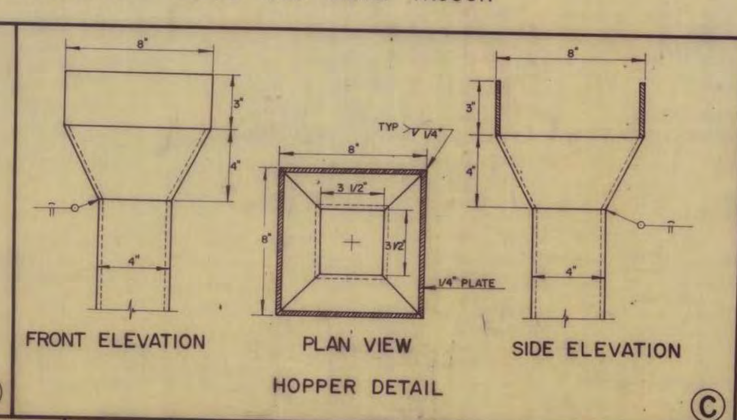

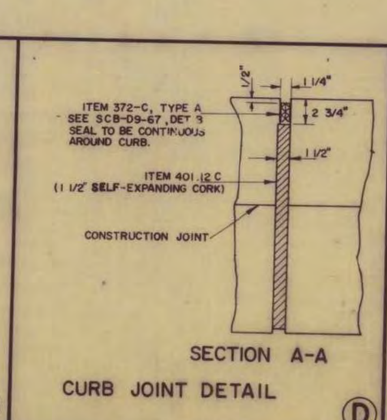

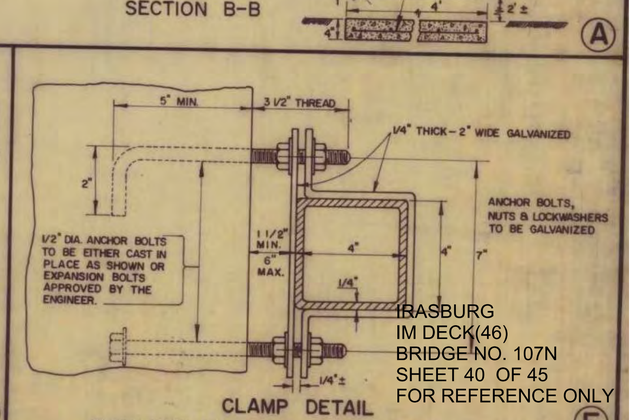

IRASBURG
IM DECK(46)
BRIDGE NO. 107N
SHEET 40 OF 45
FOR REFERENCE ONLY

REVISIONS AND CORRECTIONS

DRAWN BY:	A. V.	DEC. 1962
RETRACED BY:	AJA	MAY 1967
CHECKED BY:	W. SMITH	DEC. 1967
RECOMMENDED FOR APPROVAL	BRIDGE ENGINEER	1/24/68
RECOMMENDED FOR APPROVAL	CONSTRUCTION ENGINEER	1/24/68
RECOMMENDED FOR APPROVAL	ASST. CHIEF ENGINEER	1/24/68
APPROVED BY:	CHIEF ENGINEER	1/24/68 DATE

DETAIL OF WF BEAM BRIDGES
PIER EXPANSION PLATES AND DRAIN TROUGH DETAILS

VERMONT
DEPARTMENT OF HIGHWAYS
STANDARD STRUCTURES

SCB-D3-67

246A

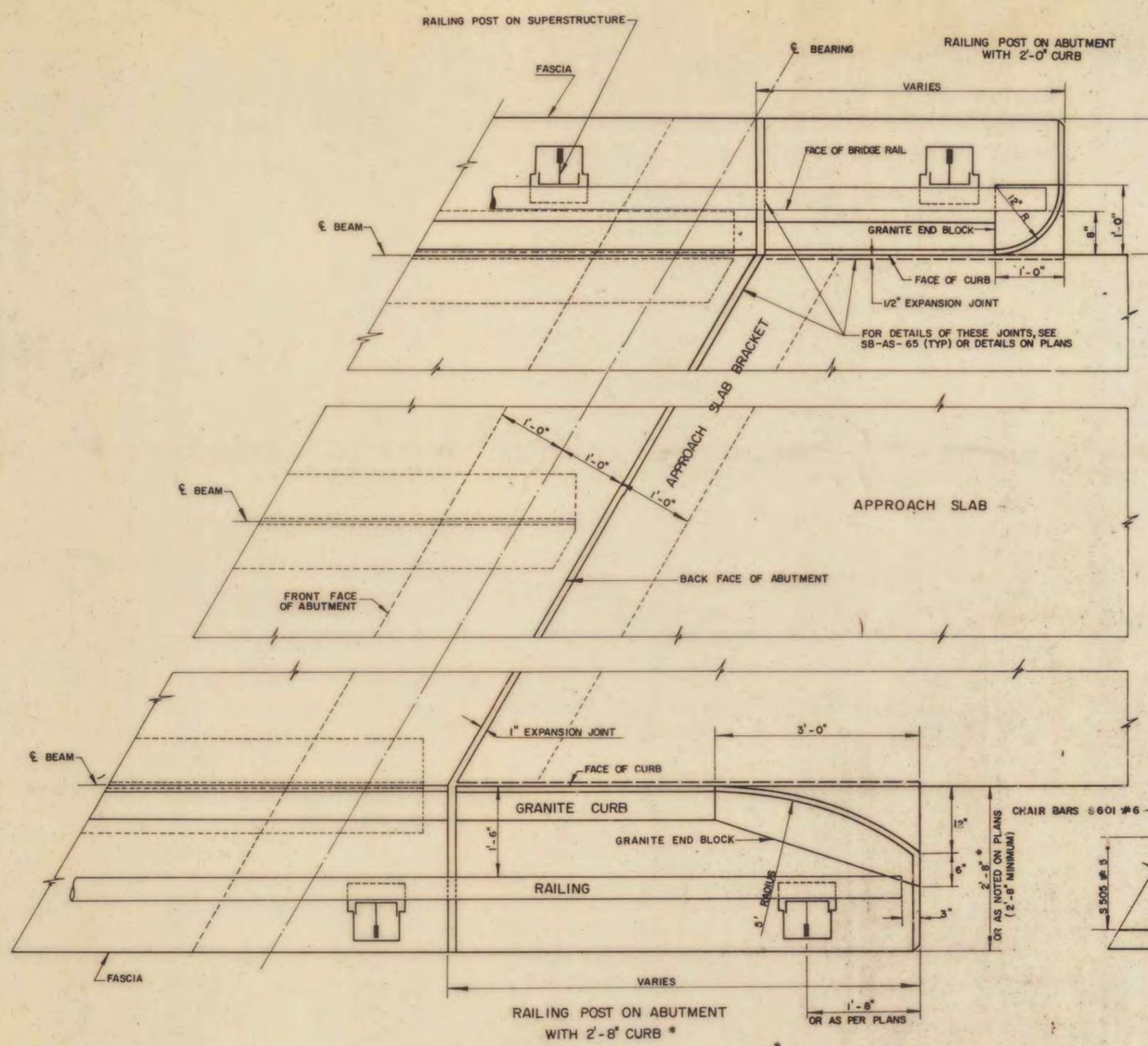

* NOTE: DETAILS FOR "RAILING POST ON ABUTMENT WITH 2'-8" CURB" SHALL NOT BE USED ON FEDERAL AID PROJECTS.

PLAN AT ABUTMENT

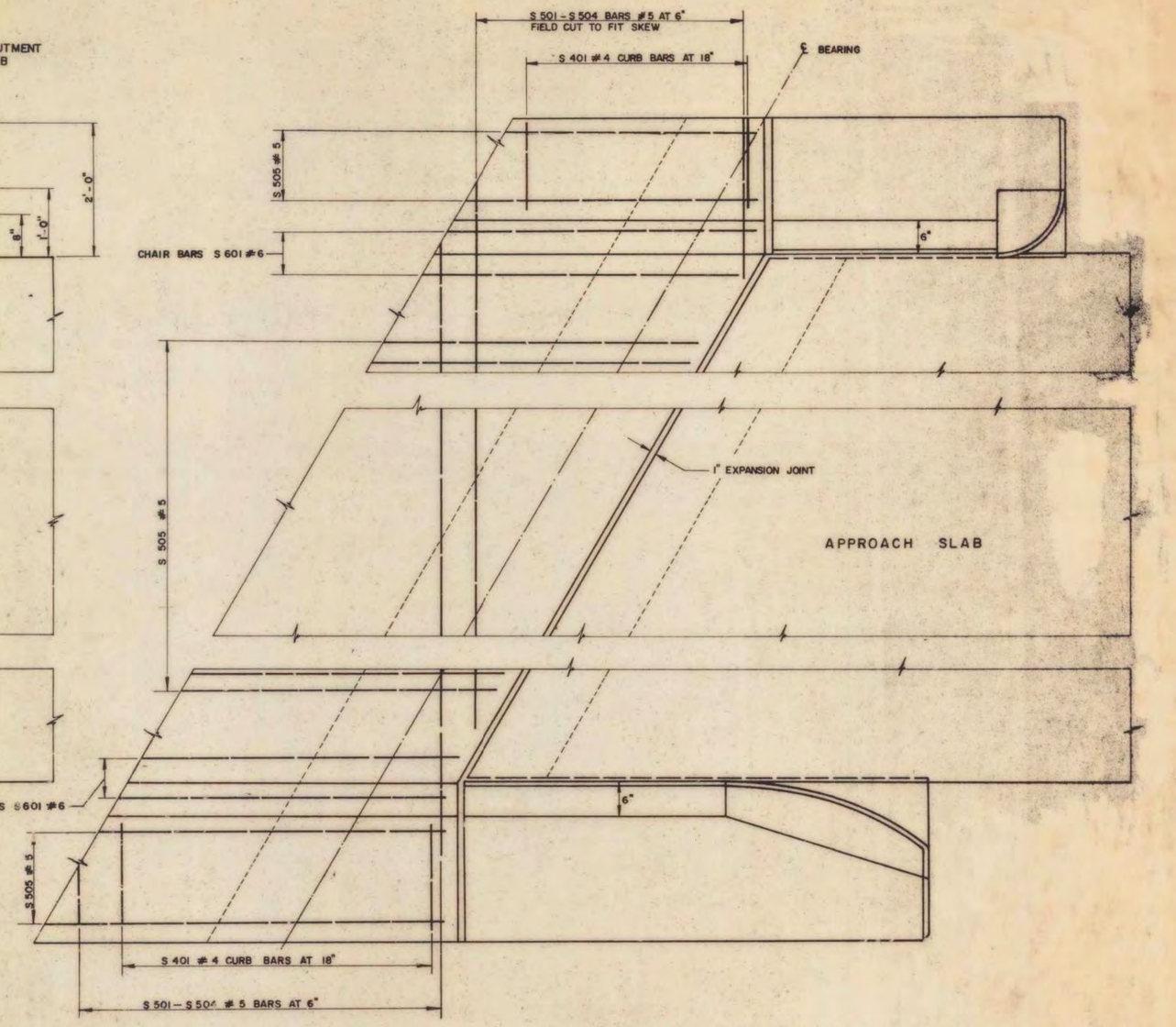

REINFORCEMENT LAYOUT AT ABUTMENT

IRASBURG
IM DECK(46)
BRIDGE NO. 107N
SHEET 41 OF 45
FOR REFERENCE ONLY

REVISIONS AND CORRECTIONS

1. NOTE CONCERNING 2'-8" CURB SECTION ADDED DEC. 17, 1968 R.S.H.

DRAWN BY:	A.V.	DEC. 1962
RETRACED BY:	AJA	MAY 1967
CHECKED BY:	W. SMITH	DEC. 1967
RECOMMENDED FOR APPROVAL (BRIDGE ENGINEER)		1/24/68
RECOMMENDED FOR APPROVAL (CONSTRUCTION ENGINEER)		1/24/68
RECOMMENDED FOR APPROVAL (ASST. CHIEF ENGINEER)		1/24/68
APPROVED BY: (CHIEF ENGINEER)		1/24/68 (DATE)

DETAILS OF WF BEAM BRIDGES
PLAN AND REINFORCEMENT LAYOUT AT ABUTMENT

VERMONT
DEPARTMENT OF HIGHWAYS
STRUCTURE STANDARDS

SCB-D4-67

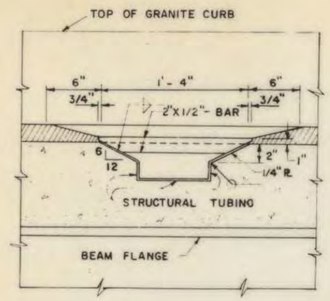

SECTION A-A

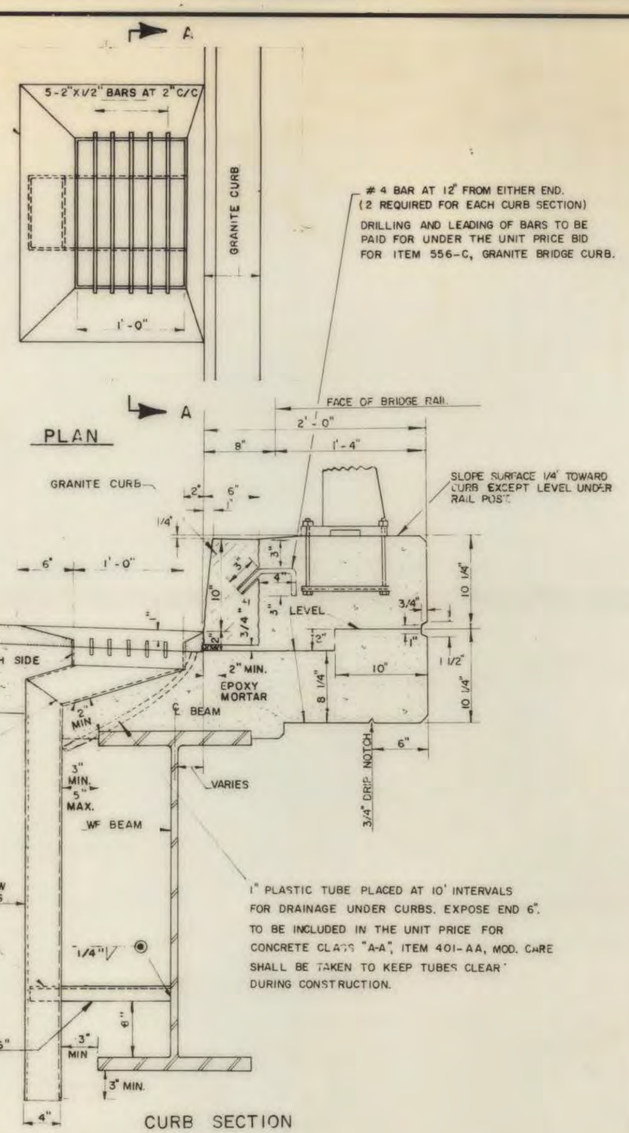

CURB SECTION

UNLESS OTHERWISE CALLED FOR ON THE PLANS:
1.- END SCUPPERS ARE TO BE PLACED MIDWAY BETWEEN ℄ BRG. AND FIRST DIAPHRAGM ASSEMBLY.
2.- INTERMEDIATE SCUPPERS ARE TO BE PLACED MIDWAY BETWEEN DIAPHRAGM ASSEMBLIES.

SCUPPER AND CURB DETAILS

(A)

CONSTRUCTION JOINTS SHALL BE PLACED AS INDICATED ON THE PLANS.

HORIZONTAL SCORE MARKS SHALL BE PLACED AS INDICATED ON THE PLANS OR AS DIRECTED BY THE ENGINEER.

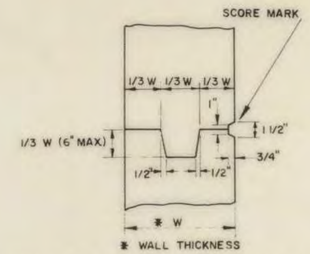

TYPICAL DETAIL OF CONSTRUCTION JOINT AND SCORE MARKS

(B)

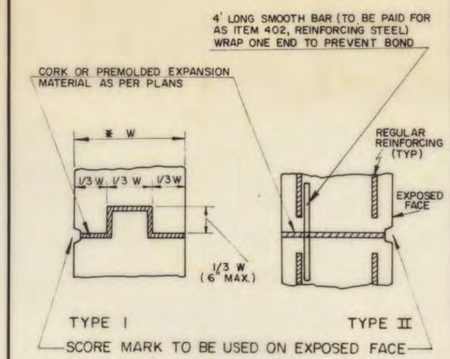

DETAILS OF VERTICAL EXPANSION JOINTS

(C)

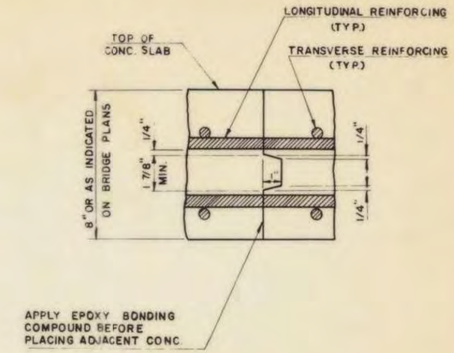

TRANSVERSE BRIDGE SLAB CONSTRUCTION JOINT DETAILS

(D)

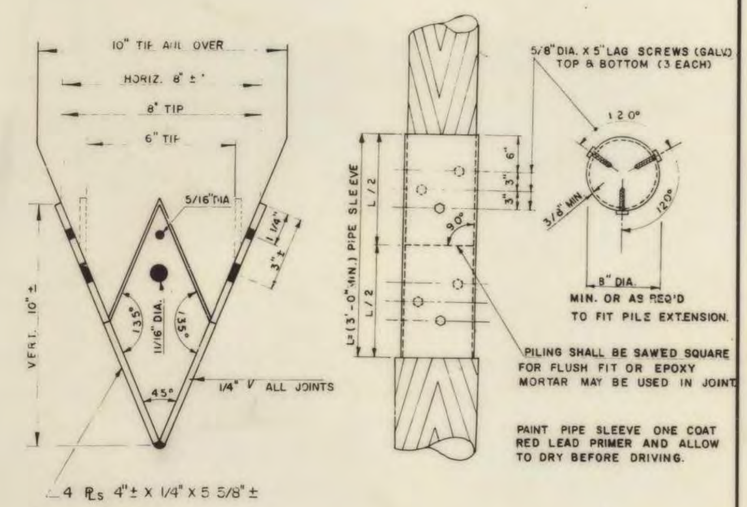

PILE SHOE

PILE SPLICE

DETAILS FOR TIMBER PILES

(E)

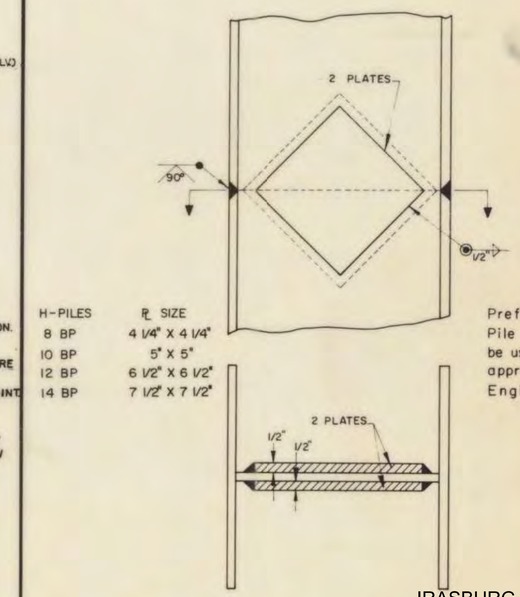

H-PILES	℞ SIZE
8 BP	4 1/4" X 4 1/4"
10 BP	5" X 5"
12 BP	6 1/2" X 6 1/2"
14 BP	7 1/2" X 7 1/2"

Prefabricated Pile Splice may be used with the approval of the Engineer.

DETAIL OF PILE SPLICE

(F)

IRASBURG
IM DECK(46)
BRIDGE NO. 107N
SHEET 42 OF 45
FOR REFERENCE ONLY

REVISIONS AND CORRECTIONS
1. REVISION IN SCUPPER TO BEAM CONNECTION. MAY 23, 1969 R.S.H.
2. REVISED SCUPPER DETAILS AND WEIGHT. - (D) ADDED "TRANSVERSE BRIDGE SLAB CONSTRUCTION JOINT DETAILS", DELETED "DETAIL OF COPPER SUPPORT FOR EXPANSION MATERIAL" - (E) ADDED "PILE SPLICE" DETAIL. APRIL 28, 1970- C O BRYAN

DRAWN BY:	A. V.	DEC. 1962
RETRACED BY:	AJA	MAY 1967
CHECKED BY:	W. SMITH	DEC. 1967
RECOMMENDED FOR APPROVAL	BRIDGE ENGINEER	1/24/68
RECOMMENDED FOR APPROVAL	CONSTRUCTION ENGINEER	
RECOMMENDED FOR APPROVAL	ASST. CHIEF ENGINEER	1/24/68
APPROVED BY:	CHIEF ENGINEER	1/24/68 DATE

DETAILS OF WF BEAM BRIDGES

(A) SCUPPER AND CURB DETAILS
(B)(C)(D) CONSTRUCTION DETAILS
(E)(F) PILE DETAILS

VERMONT
DEPARTMENT OF HIGHWAYS
STRUCTURE STANDARDS

SCB-D6-67

252C

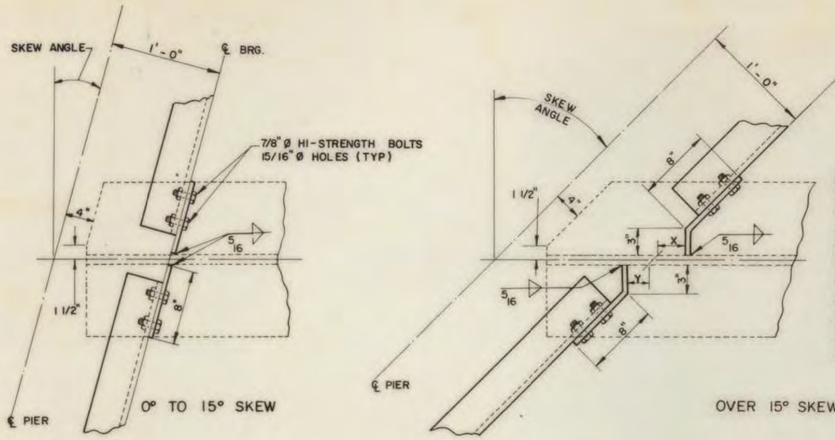

SKEW	X	Y
20°	1"	1/2"
25°	1 1/2"	3/4"
30°	1 3/4"	1 1/4"
35°	2"	1 1/2"
40°	2 1/2"	1 3/4"
45°	3"	2 1/4"
50°	3 1/2"	2 3/4"
55°	4 1/4"	3 1/2"
60°	5 1/4"	4 1/4"

DETAILS OF PIER DIAPHRAGM CONNECTIONS

Ⓐ

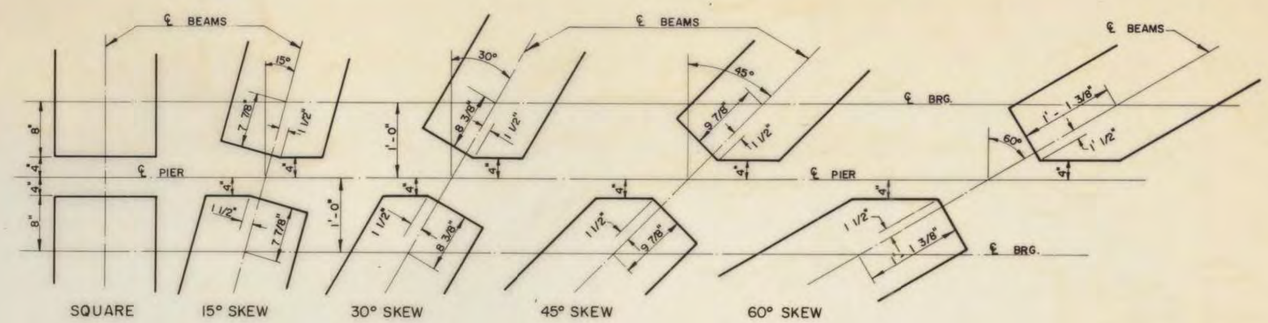

INTERIOR WF BEAM CUT-OFFS AT PIER

Ⓑ

7'-6" BEAM SPACING – S.C.B. – 24 – 67							
SPAN	COVER PL LENGTH	WIDTH	THICK-NESS	TAPER	WELD "A"	WELD "B"	L I
99'-0"	64'-10"	15"	2 1/4"	1'-10"	3/8"	5/8"	2'-5"
94'-0"	62'-2"	15"	2"	1'-10"	3/8"	5/8"	2'-1"
89'-0"	56'-6"	15"	1 5/8"	1'-10"	3/8"	1/2"	2'-3"
84'-0"	57'-4"	11"	1 3/4"	1'-4"	3/8"	1/2"	1'-8"
79'-0"	50'-9"	11"	1 3/8"	1'-4"	5/16"	1/2"	1'-4"
74'-0"	48'-9"	11"	1 1/4"	1'-4"	5/16"	1/2"	1'-4"
69'-0"	43'-0"	11"	1"	1'-4"	5/16"	3/8"	1'-6"
64'-0"	40'-9"	11"	3/4"	1'-4"	5/16"	5/16"	——
59'-0"	30'-9"	11"	1/2"	1'-4"	5/16"	5/16"	——
54'-0"	18'-9"	11"	1/2"	1'-4"	5/16"	5/16"	——

7'-4" BEAM SPACING S.C.B. – 30, 38, 44 – 67						
COVER PL LENGTH	WIDTH	THICK-NESS	TAPER	WELD "A"	WELD "B"	L I
60'-0"	15"	2 1/4"	1'-10"	3/8"	5/8"	2'-5"
60'-2"	15"	2"	1'-10"	3/8"	5/8"	2'-1"
54'-6"	15"	1 1/2"	1'-10"	5/16"	1/2"	2'-3"
55'-4"	11"	1 5/8"	1'-4"	3/8"	1/2"	1'-8"
48'-9"	11"	1 1/8"	1'-4"	5/16"	1/2"	1'-4"
46'-9"	11"	1"	1'-4"	5/16"	1/2"	1'-4"
45'-0"	11"	1"	1'-4"	5/16"	3/8"	1'-6"
38'-9"	11"	3/4"	1'-4"	5/16"	5/16"	——
28'-9"	11"	1/2"	1'-4"	5/16"	5/16"	——
14'-9"	11"	1/2"	1'-4"	5/16"	5/16"	——

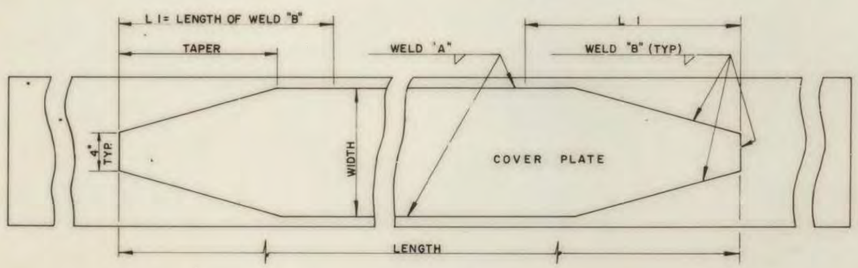

COVER PLATE DETAILS

Ⓒ

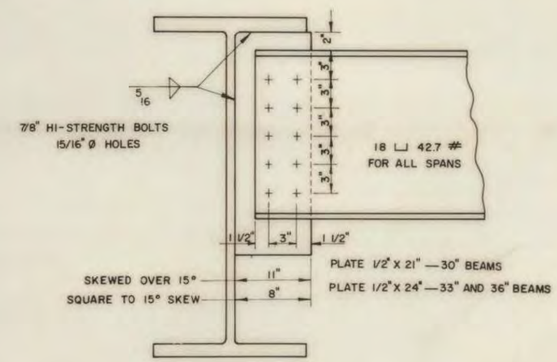

PIER DIAPHRAGMS

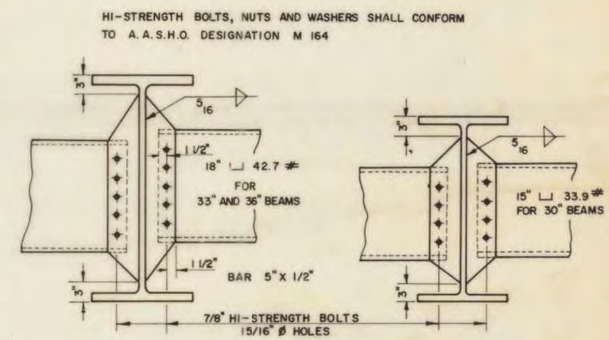

INTERMEDIATE DIAPHRAGMS

Ⓓ

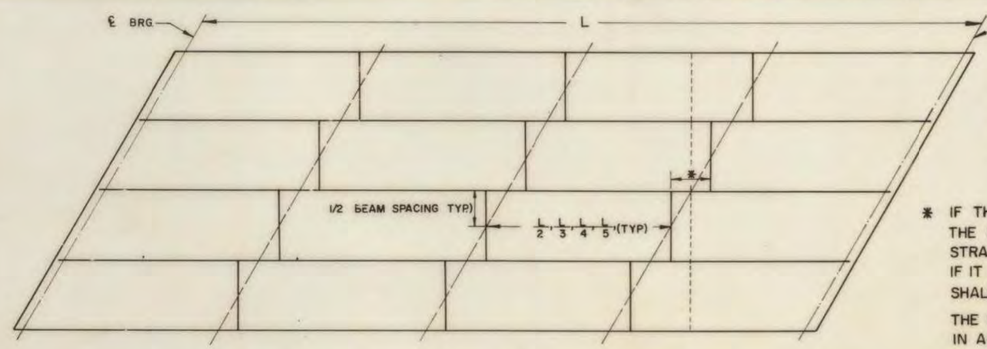

SPAN LENGTH	SETS OF DIAPH. REQUIRED
28'-0" THROUGH 43'-0"	1
44'-0" 69'-0"	2
70'-0" 84'-0"	3
85'-0" 99'-0"	4

* IF THIS DIMENSION IS LESS THAN 1'-0" THE DIAPHRAGMS MAY BE PLACED IN A STRAIGHT LINE AS INDICATED BY DASH LINE. IF IT IS GREATER THAN 1'-0" THE DIAPHAGMS SHALL BE STAGGERED AS SHOWN.

THE MAXIMUM UNBRACED LENGTH OF BEAM IN ALL CASES SHALL BE 15'-0".

DIAPHRAGM LOCATION PLAN

Ⓔ

IRASBURG
IM DECK (46)
BRIDGE NO. 107N
SHEET 43 OF 45
FOR REFERENCE ONLY

REVISIONS AND CORRECTIONS

DRAWN BY:	A.V.	DEC. 1962
RETRACED BY:	AJA	MAY 1967
CHECKED BY:	W. SMITH	DEC. 1967
RECOMMENDED FOR APPROVAL	BRIDGE ENGINEER	1/24/68
RECOMMENDED FOR APPROVAL	CONSTRUCTION ENGINEER	1/24/68
RECOMMENDED FOR APPROVAL	ASST. CHIEF ENGINEER	1/24/68
APPROVED BY:	CHIEF ENGINEER	1/24/68 DATE

DETAILS OF WF BEAM BRIDGES

STRUCTURAL STEEL DETAILS

Ⓐ Ⓓ Ⓔ DIAPHRAGM DETAILS
Ⓑ WF BEAM CUT-OFFS
Ⓒ COVER PLATE DETAILS

VERMONT
DEPARTMENT OF HIGHWAYS
STRUCTURE STANDARDS

SCB-D7-67

254A

254A

When bridge is on a grade exceeding 5%, plate "A" shall be beveled to fit with a mean thickness of 1".

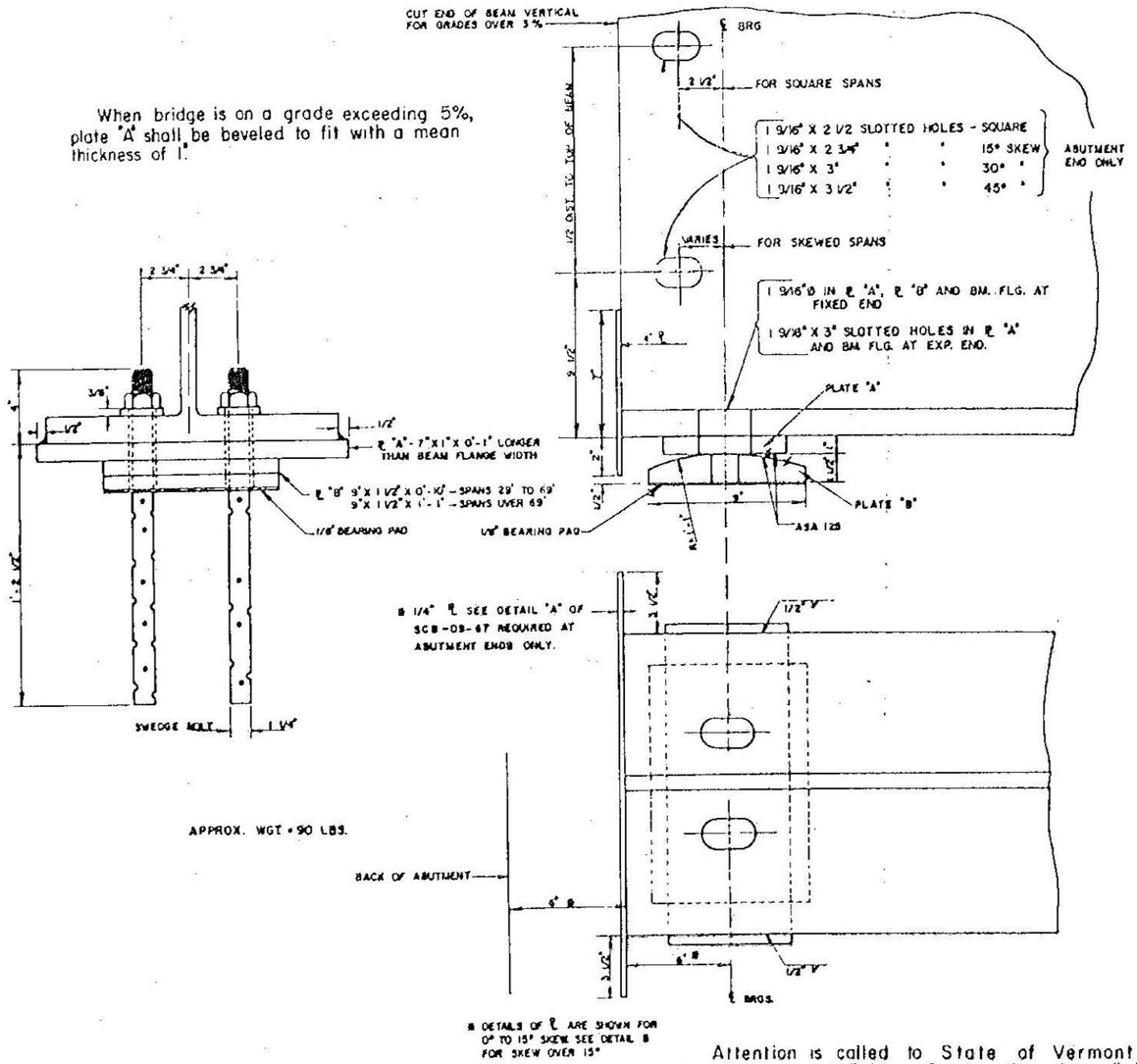

Plate "C" - 9" x 1 1/2" x 1" longer than the beam flange width. When the bridge is on a grade exceeding 5%, plate "C" shall be beveled to fit the grade with a mean thickness of 1 1/2".

Plate "D" - 7" x (outer edge thickness 1 1/2", center thickness 1") x 1'-1".

To be Cast Bronze - A.S.T.M. - B 22-40 T, Class "B" unless otherwise specified. This plate shall have trepanned recesses filled with a lubricating compound. The lubricating area shall comprise not less than 25% of the total bearing area. The manufacturer shall supply additional lubricant in liquid form with which the Contractor shall thoroughly coat the bearing surfaces that contact the lubricated portion of the bronze plate. The coefficient of friction shall not exceed 0.10.

Plate "E" - 10" x 1 1/2" x 1'-1".

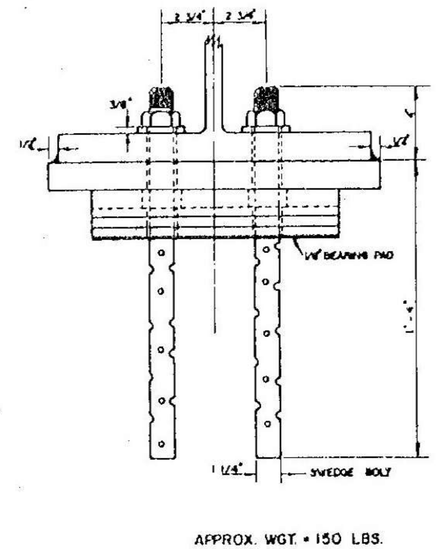

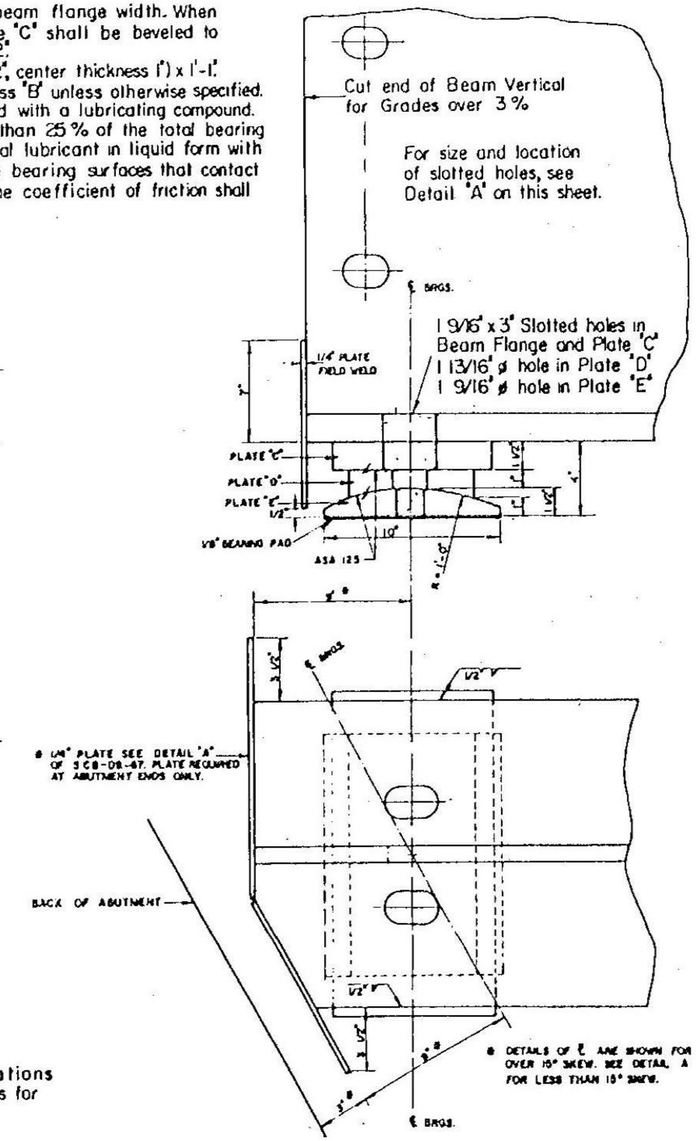

Attention is called to State of Vermont Department of Highways Standard Specifications for Highway and Bridge Construction, Item # 404, paragraph 404.02 (23) for bearing materials for Shoes and Pedestals.

FIXED END BEARING DEVICE
USE FOR EXPANSION END ON SPANS UP TO AND INCLUDING 69'

(A)

EXPANSION END BEARING DEVICE
FOR SPANS OVER 69'

IRASBURG
IM DECK(46)
BRIDGE NO. 107N
SHEET 44 OF 48
FOR REFERENCE ONLY

REVISIONS AND CORRECTIONS			
	DRAWN BY: A.V. DEC. 1968	DETAILS OF WF BEAM BRIDGES	VERMONT DEPARTMENT OF HIGHWAYS STRUCTURE STANDARDS
	RETRACED BY: AJA MAY 1987	(A) FIXED END BEARING DEVICE	SCB-D8-67
	CHECKED BY: W. SMITH DEC. 1987	(B) EXPANSION END BEARING DEVICE	
	RECOMMENDED FOR APPROVAL: 11/24/68 (STATE BRIDGE ENGINEER)		
	RECOMMENDED FOR APPROVAL: 11/24/68 (CONSTRUCTION ENGINEER)		
	RECOMMENDED FOR APPROVAL: 11/24/68 (ASST. BRIDGE ENGINEER)		
	APPROVED BY: 11/24/68 (CHIEF ENGINEER) DATE		

256 A

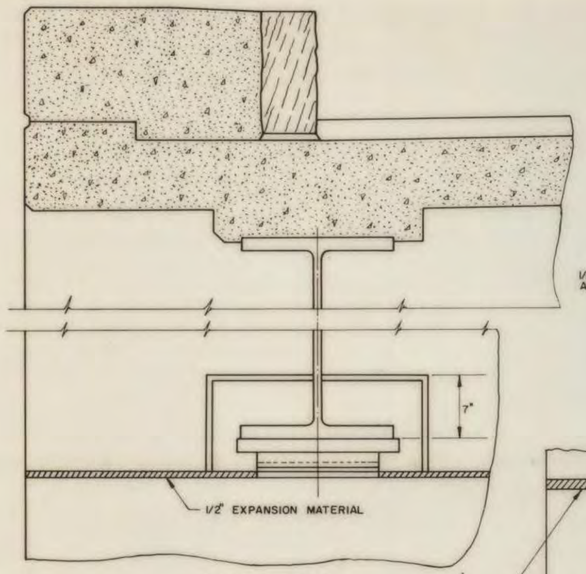

ELEVATION

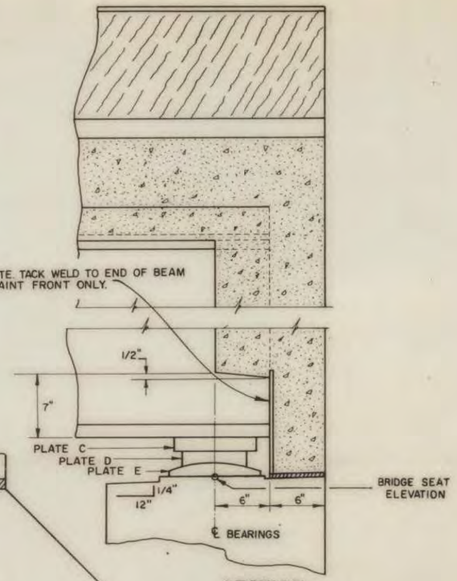

SECTION

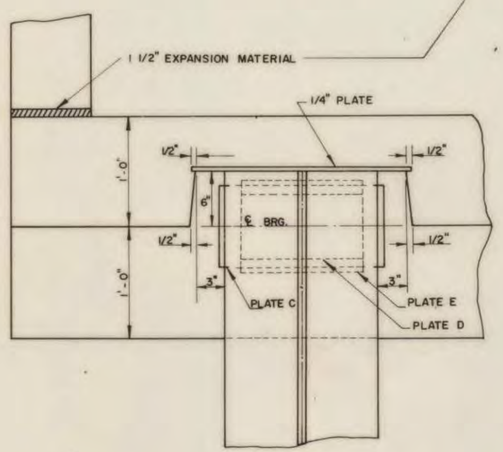

PLAN FOR SQUARE BRIDGES

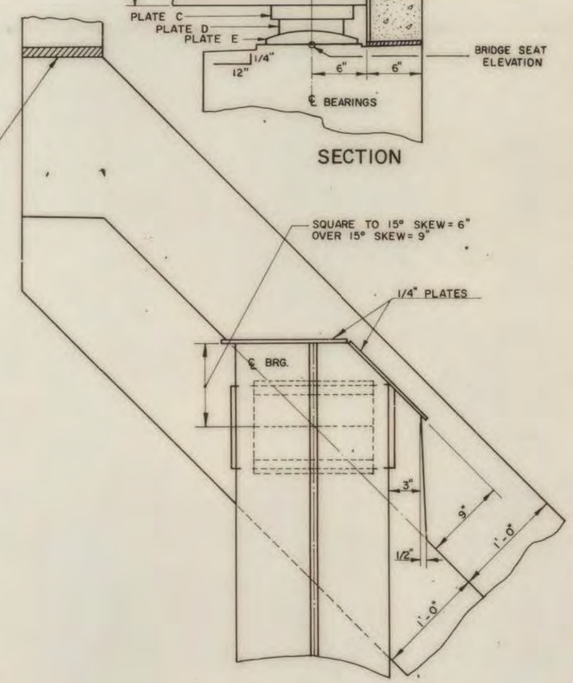

PLAN FOR SKEWED BRIDGES

(DETAILS SHOWN FOR EXP END; FIXED END SIMILAR EXCEPT ℙs A AND B IN LIEU OF ℙs C, D AND E; SEE SCB-D8-69) Ⓐ

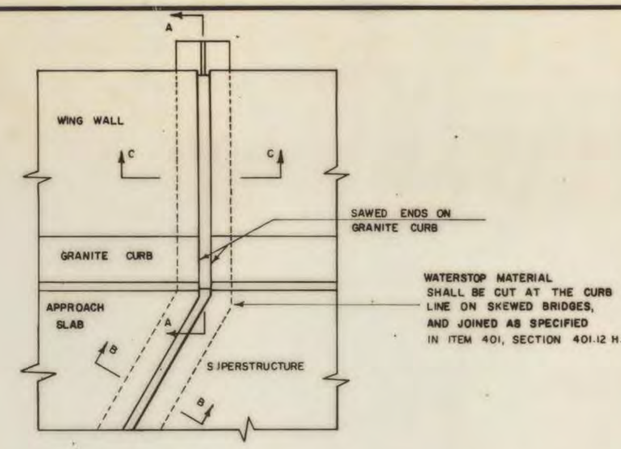

PLAN

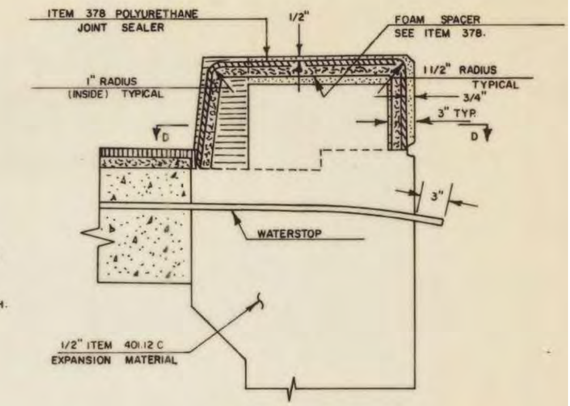

SECTION A-A

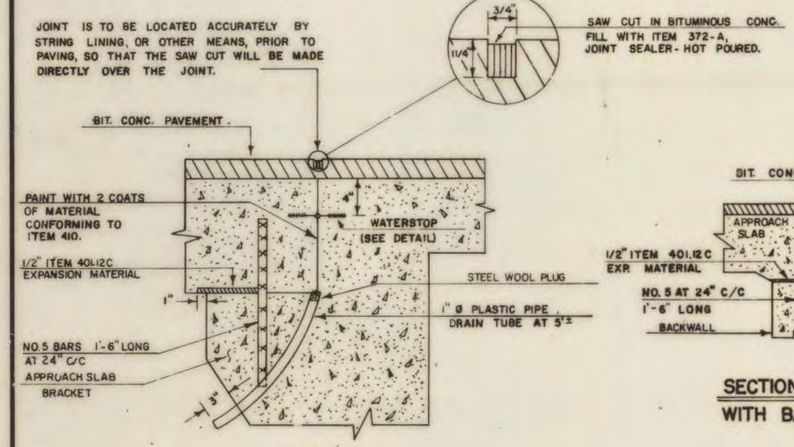

SECTION B-B

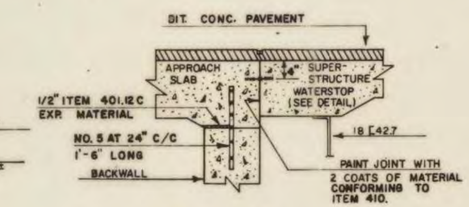

SECTION B-B
WITH BACKWALL

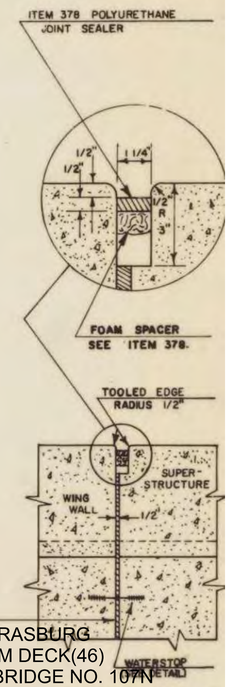

SECTION C-C Ⓑ

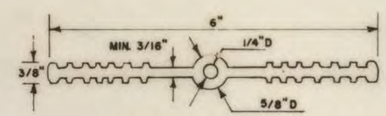

WATERSTOP DETAIL

MATERIAL TO BE POLYVINYLCHLORIDE, AS SPECIFIED IN ITEM 401.12 H. OTHER CONFIGURATIONS, WITH MINOR DIMENSION VARIATIONS, MAY BE USED WITH THE APPROVAL OF THE BRIDGE ENGINEER.

COST OF THE WATERSTOP SHALL BE INCLUDED IN THE UNIT PRICE BID FOR ITEM 401, CONCRETE.

THE CONTRACTOR SHALL PROVIDE ADEQUATE SUPPORT TO MAINTAIN PROPER ALIGNMENT OF WATERSTOP DURING CONSTRUCTION.

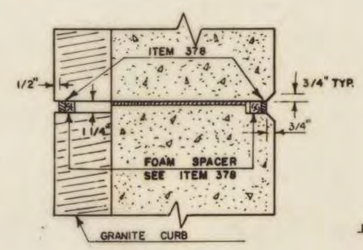

SECTION D-D

IRASBURG
IM DECK(46)
BRIDGE NO. 107N
SHEET 45 OF 45
FOR REFERENCE ONLY

REVISIONS AND CORRECTIONS

1 Ⓑ FIXED END JOINT DETAILS - ADDED 4-28-70 J. WOOD
2 ADDED " SEE SCB-D8-69 " TO NOTE ON DET. Ⓐ 12-11-70 J. WOOD

DRAWN BY:	AV	DEC 1962
RETRACED BY:	AJA	MAY 1967
CHECKED BY:	W. SMITH	DEC. 1967
RECOMMENDED FOR APPROVAL	BRIDGE ENGINEER	1/24/68
RECOMMENDED FOR APPROVAL	CONSTRUCTION ENGINEER	1/24/68
RECOMMENDED FOR APPROVAL	ASST. CHIEF ENGINEER	1/24/68
APPROVED BY:	CHIEF ENGINEER	1/24/68 DATE

DETAILS OF WF BEAM BRIDGES

Ⓐ CURTAIN WALL AT BEARING DEVICES

Ⓑ FIXED END JOINT DETAILS

VERMONT
DEPARTMENT OF HIGHWAYS
STRUCTURE STANDARDS

SCB-D9-67

258B1

CONCRETE GENERAL NOTES

1. ALL EXPOSED EDGES OF CONCRETE SHALL BE CHAMFERED 1" x 1"
2. REINFORCING STEEL SIZE AND SPACING SHOWN IN THE PLANS IS BASED ON 60 KSI STEEL, UNLESS NOTED OTHERWISE. WITH THE ENGINEER'S PERMISSION, BAR SIZE AND SPACING MAY BE MODIFIED ACCORDING TO THE LATEST AASHTO LRFD BRIDGE DESIGN SPECIFICATION AND STRUCTURES DESIGN MANUAL WHEN USING HIGHER STRENGTH STEEL.

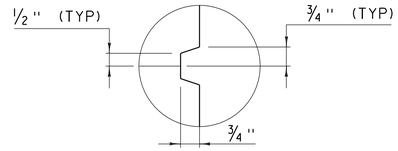

SCORE MARK DETAIL
(NOT TO SCALE)

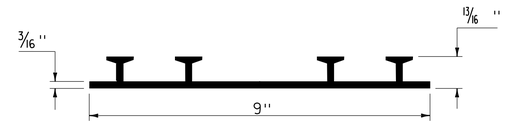

P.V.C. WATERSTOP FOR CONSTRUCTION JOINTS
(NOT TO SCALE)

PAYMENT FOR THE P.V.C. WATERSTOP SHALL BE INCIDENTAL TO THE UNIT BID PRICE FOR THE ADJACENT CONCRETE.

OTHER CONFIGURATIONS OF WATERSTOP MAY BE USED UPON APPROVAL OF THE ENGINEER.

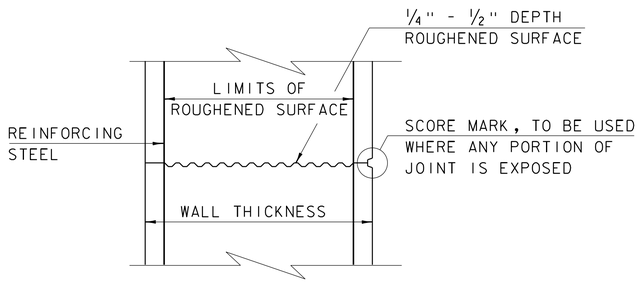

TYPICAL HORIZONTAL CONSTRUCTION JOINT
(NOT TO SCALE)

1. THE SURFACE OF THE CONCRETE CONSTRUCTION JOINTS SHALL BE CLEANED AND FREE OF LAITANCE.
2. IMMEDIATELY BEFORE NEW CONCRETE IS PLACED, ALL CONSTRUCTION JOINTS SHALL BE WETTED AND STANDING WATER REMOVED.

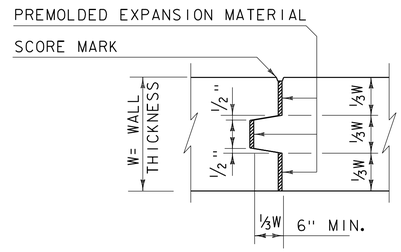

TYPICAL CONCRETE EXPANSION JOINT
(NOT TO SCALE)

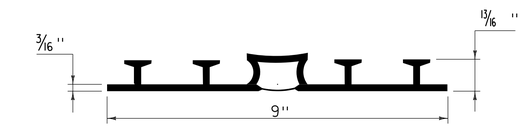

P.V.C. WATERSTOP FOR EXPANSION JOINTS
(NOT TO SCALE)

PAYMENT FOR THE P.V.C. WATERSTOP SHALL BE INCIDENTAL TO THE UNIT BID PRICE FOR THE ADJACENT CONCRETE.

OTHER CONFIGURATIONS OF WATERSTOP MAY BE USED UPON APPROVAL OF THE ENGINEER.

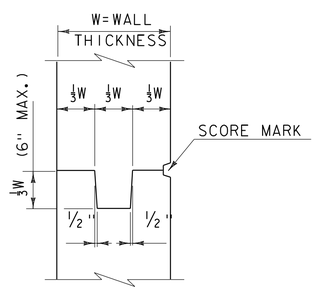

TYPICAL CONCRETE CONSTRUCTION JOINT
(NOT TO SCALE)

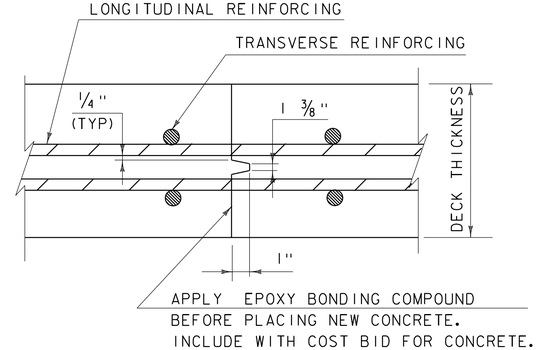

TRANSVERSE BRIDGE SLAB CONSTRUCTION JOINT DETAILS
(NOT TO SCALE)

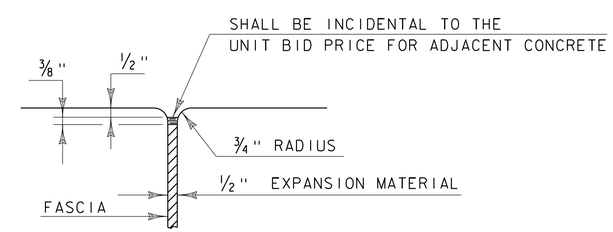

JOINT BETWEEN FASCIA AND WINGWALL
(NOT TO SCALE)

REVISIONS	
MAY 7, 2010	APPROVED FOR USE BY VAOT STRUCTURES SECTION
FEBRUARY 9, 2012	REBAR SUBSTITUTION ALLOWANCE ADDED TO CONCRETE GENERAL NOTES.

CONCRETE DETAILS AND NOTES

VERMONT AGENCY OF TRANSPORTATION
STRUCTURES SECTION

STRUCTURES DETAIL
SD-501.00

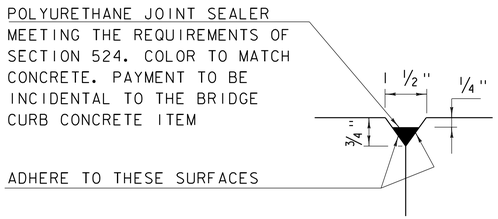

DETAIL "B"
(NOT TO SCALE)

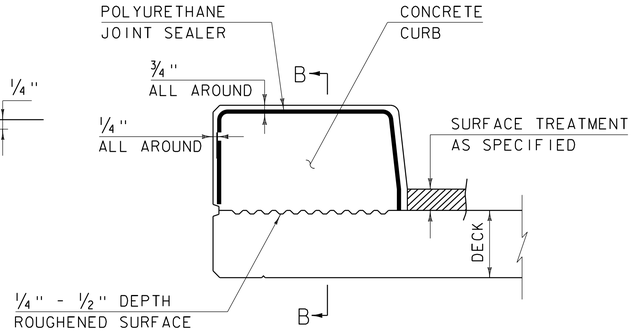

CONCRETE CURB JOINT SECTION
(NOT TO SCALE)

1. SEE TYPICAL HORIZONTAL CONSTRUCTION JOINT DETAIL FOR ADDITIONAL INFORMATION

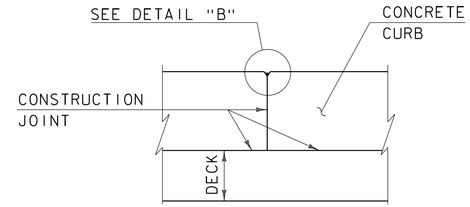

SECTION B - B
(NOT TO SCALE)

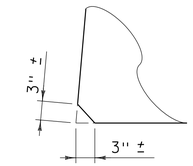

ACUTE ANGLE CLIP DETAIL
(NOT TO SCALE)

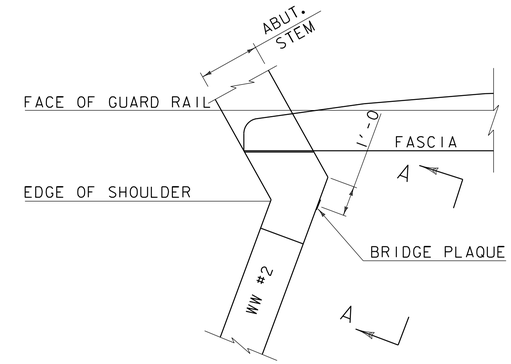

PLAN

CONCRETE CURB JOINT NOTES

1. CONCRETE CURBS MAY BE PLACED IN ONE CONTINUOUS OPERATION IF AN APPROVED SHRINKAGE REDUCING ADMIXTURE LISTED IN THE SPECIAL PROVISIONS IS USED WITH THE CONCRETE MIX DESIGN. PAYMENT FOR THE SHRINKAGE REDUCING ADMIXTURE WILL BE INCIDENTAL TO THE BRIDGE CURB CONCRETE ITEM.

2. IF THE CONTRACTOR CHOOSES NOT TO USE AN APPROVED SHRINKAGE REDUCING ADMIXTURE, THE CURBS SHALL BE CONSTRUCTED WITH CONSTRUCTION JOINTS SPACED AT A MAXIMUM OF 15'-0" CENTER TO CENTER AND 2'-0" MINIMUM FROM THE CENTER OF NEAREST BRIDGE RAILING POST.

3. ON MULTI-SPAN CONTINUOUS SUPERSTRUCTURES, REGARDLESS OF WHETHER APPROVED SHRINKAGE REDUCING ADMIXTURE IS USED, CURB JOINTS SHALL BE LOCATED OVER THE CENTERLINE OF PIERS AND 7'-0" EACH SIDE OF THE CENTERLINE OF EACH PIER.

4. WHEN CURB JOINTS ARE USED THE CURBS SHALL BE PLACED IN ALTERNATE SECTIONS WITH A MINIMUM OF 48 HOUR DELAY BETWEEN ADJACENT PLACEMENTS.

5. LONGITUDINAL REINFORCING SHALL BE CONTINUOUS THROUGH CURB CONSTRUCTION JOINTS. CURB STIRRUP BARS SHALL BE TURNED AS NECESSARY TO MAINTAIN COVER IN THE FLARED CURB ENDS.

6. THE JOINT SPACING AND DETAILS SHOWN SHALL APPLY TO SIDEWALKS WHEN SHOWN IN THE PLANS.

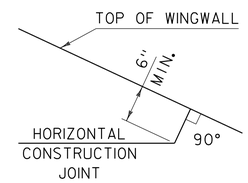

HORIZONTAL WINGWALL CONSTRUCTION JOINT
(NOT TO SCALE)

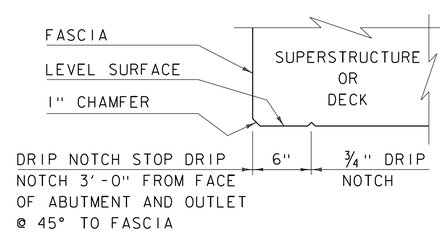

DRIP NOTCH DETAIL
(NOT TO SCALE)

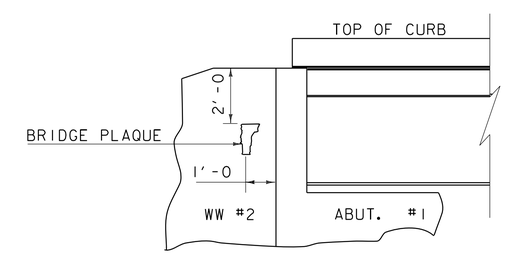

VIEW "A - A"

BRIDGE PLAQUE
(NOT TO SCALE)

THE BRIDGE PLAQUE WILL BE SUPPLIED BY THE AGENCY OF TRANSPORTATION AND SHALL BE INSTALLED BY THE CONTRACTOR AT ABUTMENT #1 ON THE RIGHT SIDE AS SHOWN OR AS DIRECTED BY THE ENGINEER.

PAYMENT FOR INSTALLATION OF THE BRIDGE PLAQUE SHALL BE INCIDENTAL TO THE ADJACENT CONCRETE.

REVISIONS

MAY 7, 2010	APPROVED FOR USE BY VAOT STRUCTURES SECTION
JUNE 4, 2010	MODIFIED AND ADDED TWO DETAILS
OCTOBER 10, 2012	MODIFIED HORZ. JOINT WINGWALL ADD 6" MIN. DIMENSION

CONCRETE DETAILS AND NOTES

VERMONT AGENCY OF TRANSPORTATION
STRUCTURES - SECTION

STRUCTURES DETAIL
SD-502.00

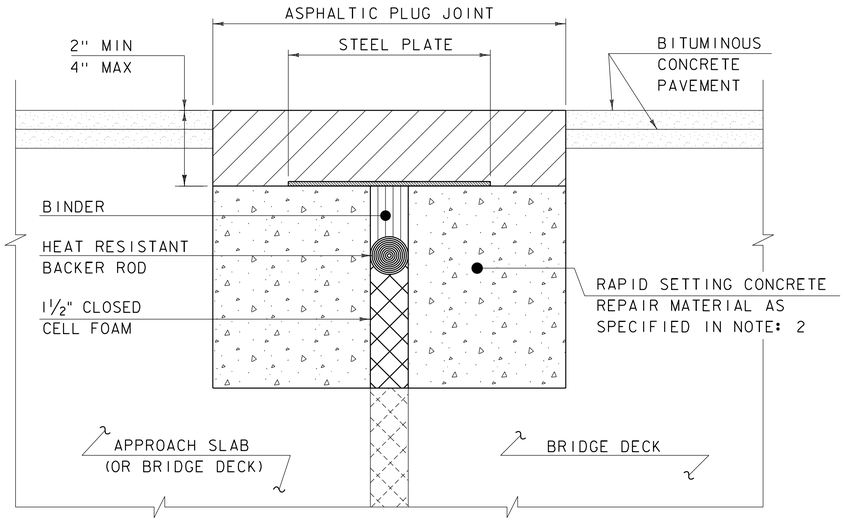

ASPHALTIC PLUG JOINT DETAIL - REHAB

NOTES:

1. THE CONTRACTOR SHALL REMOVE ALL ASPHALTIC PLUG JOINT MATERIAL AND DETERIORATED CONCRETE AS DIRECTED BY THE ENGINEER. REMOVAL OF THE FIRST 4 INCHES OF MATERIAL SHALL BE INCLUDED IN THE BID PRICE FOR ITEM 516.10 BRIDGE EXPANSION JOINT, ASPHALTIC PLUG. ANY REMOVAL OF MATERIAL GREATER THAN 4 INCHES SHALL BE INCLUDED IN THE BID PRICE OF ITEM 580.20 RAPID SETTING CONCRETE REPAIR MATERIAL WITH COARSE AGGREGATE.

2. THE CONTRACTOR SHALL REPLACE REMOVED MATERIAL THAT IS LESS THAN 4" FROM FINISHED GRADE WITH ASPHALTIC PLUG JOINT MATERIAL MEETING THE REQUIREMENTS OF SUBSECTION 707.15. ALL REMOVED MATERIAL THAT IS GREATER THAN 4 INCHES FROM FINISHED GRADE SHALL BE REPLACED WITH RAPID SETTING CONCRETE REPAIR MATERIAL WITH COARSE AGGREGATE MEETING THE REQUIREMENTS OF SUBSECTION 780.04.

3. REINFORCING STEEL NOT SHOWN FOR CLARITY.

4. PLACE 1/4" THICK BY 8" WIDE SECTIONS OF STEEL PLATE OVER THE CENTER OF THE MOVEMENT GAP. SECURE THE PLATES FROM MOVING BY INSERTING LOCATING PINS THROUGH THE PRE-STAMPED HOLES INTO BACKER ROD AND COVER WITH HOT BINDER. THE STEEL PLATES MAY BE OMITTED WHERE THE ENGINEER DETERMINES THAT THE APPROACH SLAB OR BRIDGE DECK WILL PROVIDE INADEQUATE SUPPORT AND WHERE VERTICAL MOVEMENT OF THE PLATES MIGHT OCCUR.

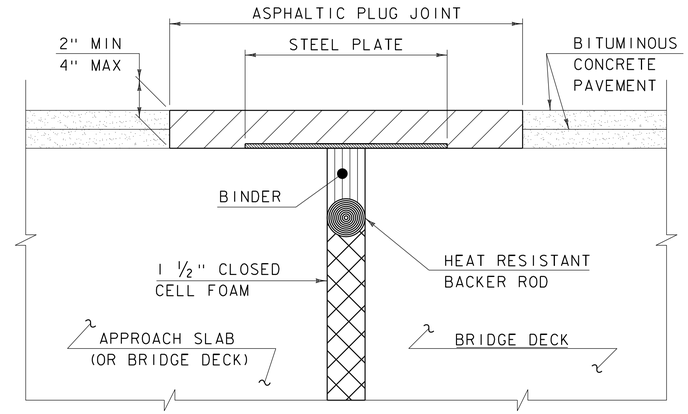

ASPHALTIC PLUG JOINT DETAIL "A" - NEW

NOTE:
PLACE 1/4" THICK BY 8" WIDE SECTIONS OF STEEL PLATE OVER THE CENTER OF THE MOVEMENT GAP. SECURE THE PLATES FROM MOVING BY INSERTING LOCATING PINS THROUGH THE PRE-STAMPED HOLES INTO BACKER ROD AND COVER WITH HOT BINDER.

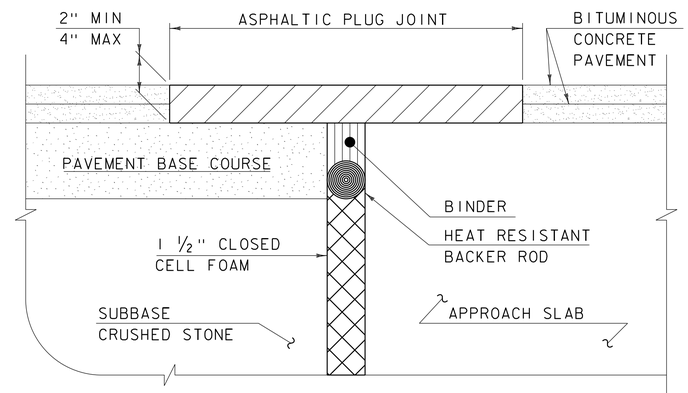

ASPHALTIC PLUG JOINT DETAIL "B" - NEW

ASPHALTIC PLUG JOINT NOTES

INSTALLATION:

1. LOCATE THE JOINT CENTRALLY OVER THE DECK OVERLAY EXPANSION GAP OR FIXED JOINT, MARKED OUT TO THE MANUFACTURER'S RECOMMENDED WIDTH.

2. REMOVE THE BITUMINOUS CONCRETE PAVEMENT FULL DEPTH AS SHOWN ON THE PLANS. THE PAVEMENT SHALL BE DRY AND SAW CUT TO THE LIMITS REQUIRED TO PLACE THE JOINT. A PNEUMATIC HAMMER AND CHISEL MAY BE USED ADJACENT TO THE CURB ONLY WHEN SAW CUTTING IS NOT POSSIBLE.

3. BLAST CLEAN THE JOINT AREA OF DEBRIS, ASPHALT AND SHEET MEMBRANE. THOROUGHLY DRY THE JOINT AREA WITH COMPRESSED AIR PRIOR TO APPLYING BINDER MATERIAL.

4. PLACE PROPERLY SIZED HEAT RESISTANT BACKER ROD IN THE MOVEMENT GAP ALLOWING FOR 1" +/- OF BINDER ABOVE THE ROD.

5. HEAT AND PLACE THE BINDER MATERIAL AS RECOMMENDED BY THE MANUFACTURER.

6. IMMEDIATELY AFTER TOP COATING, CAST AN ANTI-SKID MATERIAL OVER THE JOINT TO REDUCE THE RISK OF TRACKING.

WEATHER LIMITATIONS

APPLY BINDER MATERIAL ONLY WHEN THE FOLLOWING CONDITIONS PREVAIL OR AS RECOMMENDED BY THE MANUFACTURER:

1. THE AMBIENT AIR TEMPERATURE IS AT LEAST 10 DEG C (50 DEG F) AND RISING.

2. THE ROAD SURFACE IS DRY.

3. WEATHER CONDITIONS OR OTHER CONDITIONS ARE FAVORABLE AND ARE EXPECTED TO REMAIN SO FOR THE PERFORMANCE OF SATISFACTORY WORK.

DETAILS ON THIS SHEET ARE NOT TO SCALE.

REVISIONS	
MAY 7, 2010	APPROVED FOR USE BY VAOT STRUCTURES SECTION
AUGUST 29, 2011	ADD DETAIL "B" AND REV. NOTES

BRIDGE JOINT
ASPHALTIC PLUG

VERMONT AGENCY OF TRANSPORTATION
STRUCTURES - DIVISION

STRUCTURES DETAIL

SD-516.10

STRUCTURAL STEEL GENERAL NOTES:

1. ALL FIELD CONNECTIONS SHALL BE MADE WITH 7/8" DIAMETER HIGH-STRENGTH BOLTS IN 15/16" DIAMETER HOLES, PER SUBSECTION 506.19, UNLESS OTHERWISE SPECIFIED.
2. ALL HOLES IN THE WEBS OF THE FASCIA GIRDERS THAT ARE NOT OTHERWISE FILLED, SHALL BE FILLED WITH EITHER BUTTON HEAD OR HEX HEAD BOLTS. THESE BOLTS SHALL BE TIGHTENED IN ACCORDANCE WITH SUBSECTION 506.19.
3. ALL WELDING SHALL CONFORM TO THE PROVISIONS OF SUBSECTION 506.10.
4. ANY CONNECTIONS THAT ARE NOT DETAILED ON THE PLANS SHALL BE DETAILED BY THE FABRICATOR AND SUBMITTED TO THE STRUCTURES ENGINEER FOR APPROVAL.
5. STRUCTURAL STEEL MEMBERS DESIGNATED "CVN" IN THE PLANS SHALL BE CHARPY V-NOTCH TESTED IN ACCORDANCE WITH SUBSECTION 714.01 OF THE STANDARD SPECIFICATIONS.
6. ENDS OF GIRDERS ARE TO BE VERTICAL IN THEIR FINAL POSITION.
7. AFTER SUPERSTRUCTURE STEEL HAS BEEN ERECTED, ELEVATIONS ALONG THE TOP OF THE GIRDERS SHALL BE TAKEN AS DIRECTED BY THE RESIDENT ENGINEER FOR USE IN DETERMINING FINISHED GRADES.

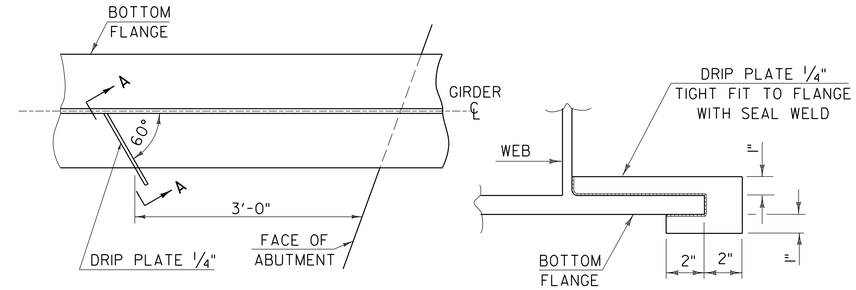

PLAN DRIP PLATE

SECTION A - A

NOTE: DRIP PLATES SHALL BE PLACED ON OUTSIDE EDGE OF FASCIA GIRDERS ON THE HIGH SIDE OF ALL PIERS AND ABUTMENTS OR AS INDICATED ON PROJECT PLANS.

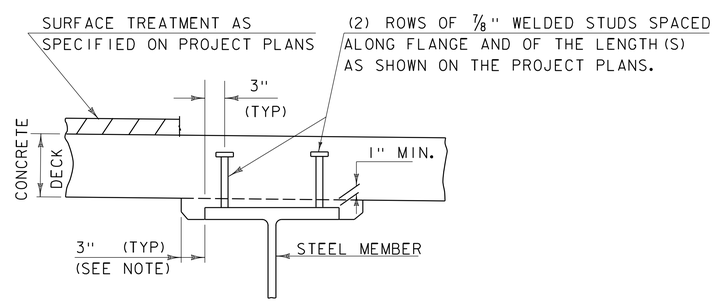

NOTE:
THE 3" HORIZONTAL SECTION MAY BE ELIMINATED FOR FORMING SYSTEMS DESIGNED FOR THE CONSTRUCTION OF VERTICAL HAUNCHES. ANY VOIDS RESULTING FROM FORMING SYSTEM ELEMENTS SHALL BE FILLED WITH JOINT SEALER, POLYURETHANE MEETING THE REQUIREMENTS OF SECTION 524. THE COST OF THE JOINT SEALER, POLYURETHANE SHALL BE INCIDENTAL TO THE ADJACENT CONCRETE.

HAUNCH AND SHEAR CONNECTOR DETAIL

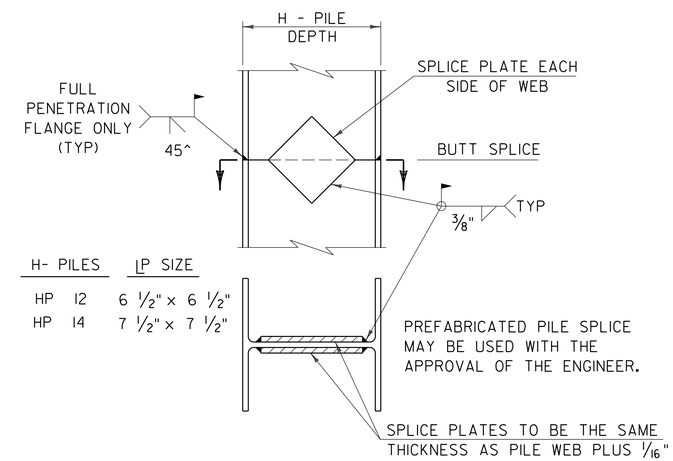

DETAIL OF PILE SPLICE

DETAILS ON THIS SHEET ARE "NOT TO SCALE" UNLESS NOTED OTHERWISE.

REVISIONS	
MAY 7, 2010	APPROVED FOR USE BY VAOT STRUCTURES SECTION
JUNE 4, 2010	MODIFIED NOTES

STRUCTURAL STEEL DETAILS & NOTES

VERMONT AGENCY OF TRANSPORTATION
STRUCTURES - SECTION

STRUCTURES DETAIL

SD-601.00