STATE OF VERMONT
AGENCY OF TRANSPORTATION

Scoping Report

FOR

Weathersfield IM 091-1(69)

I-91, Bridges 30N and 30S over VT 131

October 6, 2016

I.

Contents

I. Site Information 4

Need 4

Traffic 4

Design Criteria 5

Inspection Report Summary 6

Hydraulics 7

Utilities 7

Right-Of-Way 7

Resources 7

Biological: 7

Archaeological: 7

Historic: 8

Hazardous Materials: 8

Stormwater: 8

II. Safety 8

Alternatives Discussion 8

III. 8

No Action 8

Alternative 1: Rehabilitation 9

Alternative 2: Deck Replacement 9

Alternative 3: Superstructure Replacement 10

Alternative 4: Complete Replacement 11

IV. Maintenance of Traffic 11

Option 1: Off-Site Detour 12

Option 2: On-Site Detour with Temporary Bridge 12

Option 3: Phased Construction 13

Option 4: On-Site Detour with Crossovers 13

V. Alternatives Summary 14

VI. Cost Matrix 15

VII. Conclusion 16

VIII. Appendices 18

Appendix A: **Site Pictures…….17**

Appendix B: **Town Map……24**

Appendix C: **Bridge Inspection Reports…….26**

Appendix D: **Preliminary Geotechnical Information……..29**

Appendix E: **Natural Resources Memo…….34**

Appendix F: **Archaeological Memo……36**

Appendix G: **Historic Memo…… ……38**

Appendix H: **Stormwater Memo……..40**

Appendix I: **Crash Data…….42**

Appendix J: **Plans…… 45**

.

I. Site Information

Bridges 30 North and South (30 N/S) are bridges located on Interstate 91 (I-91) in the Town of Weathersfield in Windsor County at Exit 8. Bridge 30N (south end) begins at approximately mile marker 51.35 and Bridge 30S (north end) begins at approximately mile marker 51.4. These bridges carry I-91 over VT 131. The affected area under the bridges on VT 131 includes approximately 200 ft. of VT 131 and begins at approximately mile marker 8.20. The inspection reports note that both bridges are skewed at 48 degrees. The existing conditions were gathered from a combination of a Site Visit, the Inspection Report, the Route Log and satellite imagery. See additional information in the Appendix.

Roadway Classification	I-91: Urban Principal Arterial – Interstate
	VT 131: Major Collector
Bridge Type	3-Span Continuous Rolled Beam
Bridge Lengths	219 ft. (NB)
	219 ft. (SB)
Skew	48 degrees
Year Built	1965
Ownership	State of Vermont

Need

The following is a list of the deficiencies of Bridges 30 N&S.

1. The existing lane and shoulder widths are substandard on both approaches and bridges.
2. K-values and sight stopping distances are substandard.
3. Bridge and approach railings are substandard.
4. There are areas of deterioration on all fasciae, curbs, beam seats, and expansion joints.
5. The superstructures on both bridges have been damaged from below by over-height vehicles in several places.

Traffic

A traffic study of this site was performed by the Vermont Agency of Transportation. The traffic volumes are projected for the years 2016 and 2036.

Section	AADT		DHV		%T		%D		ADTT	
	2016	2036	2016	2036	2016	2036	2016	2036	2016	2036
1	3900	4500	630	730	12.5	17.4	100	100	830	1300
2	4000	4600	830	960	15.3	21.1	100	100	870	1400
3	7700	8200	860	920	3.8	5.7	60	60	530	850

Section #1 ----------Bridge 30N Northbound
Section #2 ----------Bridge 30S Southbound
Section #3 ----------VT 131 under Bridges 30N&S

Design Criteria

The design standards for this roadway are indicated below:

1. AASHTO. *A Policy on Geometric Design of Highways and Streets.* Association of State Highway and Transportation Officials, Washington, DC, 2011. (The Green Book)

2. AASHTO. *Roadside Design Guide.* Association of State Highway and Transportation Officials, Washington, DC, 2011.

3. Minimum standards are based on commentary from the Vermont State Design Standards for Lane and Shoulder widths for Urban Collectors. http://vtransengineering.vermont.gov/sites/aot_program_development/files/documents/publications/VermontStateDesignStandards.pdf

Minimum standards are based on the traffic volumes listed above and a design speed of 70 mph.

Design Criteria	Source	Existing Condition	Minimum Standard	Comment
Approach Lane and Shoulder Widths	Green Book, Chapter 8.2	4'/12'/12'/9' (37')	4'/12'/12'/10' (38')	Substandard
Bridge Lane and Shoulder Widths	Green Book, Chapter 8.2	3'/12'/12'/3' (30')	4'/12'/12'/10' (38')	Substandard
Clear Zone Distance	VSS Table 3.4	Clear or Shielded	24' fill / 14' cut (1:3), 16' cut (1:4)	
Banking	VSS Section 3.13	Normal Crown	8% (max)	
Speed		65 mph (Posted)	70 mph (Design)	
Horizontal Alignment	AASHTO Green Book Table 3-10b	Both bridges are on tangents		
Vertical Grade	VSS Table 3.5	NB: +/- 3.7% SB: +/- 3.1%	5% (max) for rolling terrain	
K Values for Vertical Curves	AASHTO Green Book Tables 3-34 and 3-36	170 NB 202 SB	247	Substandard[1]
Vertical Clearance Issues	VSS Section 3.8	None noted	I-91:16'-3" VT 131:14'-3"[2]	
Stopping Sight Distance	AASHTO Green Book, Table 3-34	606 NB crest 659 SB crest	730'crest/730' sag	Substandard[1]
Bicycle/Pedestrian Criteria	NA	NA	NA	
Bridge Railing	Structures Manual Section 13	Steel Beam Guardrail	TL-4 required	Substandard
Hydraulics	VTrans Hydraulics Section	NA – spans over roadway	NA	
Structural Capacity	Structures Design Manual Section 3.4.1	Not Deficient[3]	Design Live Load: HL-93	

[1] No survey was acquired for this project. The existing values were taken from the original construction drawings. It is not expected that any corrective work will be done on the roadway geometry on this project.

[2]Vertical clearance above VT Route 131 measures 15'-0", however, superstructures on bridges 30 N&S have been struck from below.
[3]Superstructures on both bridges have sustained visible distortion from being struck by traffic below on VT 131. Degree of damage or strength loss is judged to be minor. A study was done on these bridges in 2009 by the University of Massachusetts Amherst, which concluded that the load ratings of both bridges are satisfactory despite the superstructure damage. This voluminous report is available on request.

Inspection Report Summary

Bridge	Deck Rating	Superstructure Rating	Substructure Rating	Channel Rating
30N	7	5	6	NA
30S	6	5	6	NA

From Inspection Reports:

Bridge 30N

5/20/2014 Curbs and fascias should be cleaned and patched. Spalling in the seat area should be patched. Beams should be cleaned and painted soon. – FRE/TJB

05/11/2012 Spalling in the seat area should be cleaned and patched. Curbs also should be cleaned of all loose material and patched. – FRE/SJH

04/13/10 Significant repairs are needed along both curb areas. Steel beams with previous collision damage need repairs. PLB

05/14/08 This structure is in satisfactory to good condition. The deck wearing surface is in poor condition. There is a paving project going on in the area and the deck may be stripped and repaved. There are some scrape marks in beams 1, 2, & 4 in the bottom flanges from over height vehicles. Beam 2 is bent some and there is a ding in the bottom flange. The minimum vertical clearance was measured to be 15'-0" at the centerline of the west fascia beam. DCP

Bridge 30S

5/20/2014 Both curbs should be cleaned and patched. Weep tubes should be extended past the bottom of the beams. Tear in the bottom flange of beam #2 should be monitored until repaired or replaced. There is no change in the tear from last inspection. Beams should be spot cleaned and painted. FRE/TJB

05/11/2012 Spalling in the seat area should be cleaned and patched. The tear in beam #2 should be repaired. Beams 1, 2, and 4 minor bends. The tear in beam #2 should be monitored until repair is made. - FRE/SJH

04/13/10 Plug joint #1 is in need of repairs. Minor repairs are needed along both curb areas. Steel beams with previous collision damage need repairs. PLB

05/14/08 This structure is in satisfactory to good condition. There is a paving project going on in the area. The finger plate joint of abutment #2 sticks up ¼ to ½" in the shoulder area in the direction of the travel lane. The plow could hit the joint and cause an accident. There are dings in beams 1,2 and 4 in the bottom flange. There is a large crack in the bottom flange of beam #1 along the weld for the web. The crack was measured to be 21-1/4" long. No change since last inspection. The approach and bridge concrete curbs need repair in all four corners. The short weep tubes need to be extended. DCP

Hydraulics

Not Applicable; bridges span over VT 131.

Utilities

Underground: There are no known underground utilities in the project area.

Aerial: There are overhead utility lines in the vicinity of the bridges, but they are far enough away so they will not affect nor be affected by the project. There is a Radio Weather Information System near the area, with sensors buried within the pavement. New sensors will be required, as the existing sensors have been discontinued by the manufacturer. The new ones will actually not be located on the bridge, but adjacent to it on a new 5" diameter metal pole.

Right-Of-Way

The existing Right-of-Way (ROW) is shown on the Layout sheet. It is variable in width and is expected to be adequate for most work and traffic management methods anticipated.

Resources

Information on resources present at this project was gathered and is explained below:

Biological:

Wetlands

There are no wetlands within the project area.

Wildlife Habitat

There are no wildlife corridor issues within the project area.

Rare, Threatened and Endangered Species

There are no mapped State rare, threatened, and endangered species located in the vicinity of the project.

Agricultural

There are no prime agricultural soils within the project area.

Archaeological:

There are no archaeological resources or sensitive areas believed to be in the project area.

Historic:
The interstate system is considered historic property, but is exempt from section 106 and 4(f) review in this location.

Hazardous Materials:
According to the Vermont Agency of Natural Resources (VANR) Vermont Hazardous Sites List, there are a handful of hazardous waste sites in the vicinity. There is only one still active, east of the project site on VT 131, but is far enough away to not be impacted by this project.

Stormwater:
There are no stormwater related resource concerns for this project, unless crossovers are built and remain in place for longer than three years.

II. Safety

Interstate 91 is not a HCL (high crash location) at the project area, although there are HCLs within a mile away in both directions. Crash data for both I-91 and VT 131 can be seen in the Appendix. Although there are substandard geometric elements on or near the bridges, including shoulder widths, it does not appear that there are frequent crashes on the bridges. VT 131 near Bridges 30N&S is a HCL. It does not appear that lane and shoulder widths on VT 131 are deficient in this location. Improvements to VT 131 are not considered as part of this project.

III. Alternatives Discussion

To assist in determining the preferred alternative, a limited number of concrete cores were extracted from both bridge decks (30N/S) on December 15, 2015. The samples were taken generally near the north end of Bridge 30N, and near the south end of Bridge 30S. An attempt was made to sample from locations that might represent the worst case conditions in the decks so that consideration can be given to correcting the worst areas. The samples were tested in the VTrans Materials Lab and the results are summarized in the Appendix. The results of these tests indicate that the concrete in the travel lanes is in fairly good shape and probably and indicative of the ratings. In the shoulders, and especially in the areas within a foot or two of the curbs, the concrete quality is poor. Concrete strength could not be determined in some of these curb areas due to the crumbled nature of the concrete in some samples, and the chloride profiles indicated that there is deep penetration of chlorides in these areas closest to the curbs, approximately 1’-1.5’ from the curbs. Sampling was not performed in the passing lane areas.

No Action

This alternative would involve leaving the two bridges in their current condition. Although the danger of collapse is not considered to be realistic, there has been structural damage caused by over-height traffic impacts from trucks traveling on VT 131 below. Patching and repair work is advised on the superstructures, all curbs on both bridges, all expansion joints, beam seats, and surfaces of the substructures. A good rule of thumb for the “No Action” alternative is to determine whether the existing bridge can stay in place without any work being performed on it during the next 10 years. Given the fair rating on the superstructure, and the nature of the deck concrete in some areas tested, this bridge will require work within the next 10 years. From the standpoint of safety, economics, and convenience, this alternative is not recommended and will not be considered further.

Alternative 1: Rehabilitation

The major elements of the bridges are rated from fair to good. There is noticeable damage caused by truck impacts traveling along VT 131 below. The rehabilitation tasks listed herein would include the minimal amount of work to ensure the continued structural integrity of the beams and decks and extend the useful life of the bridges:

- Beam repair. There are bottom flanges on several beams that are bent. Also, at least one beam has cracked along the bottom between the web and bottom flange. A typical repair may consist of partial removal of displaced material and replacement with weld material. Another possible method would be the addition of cover plates, although this decreases the clearance slightly. Cracked areas could be repaired by welding or cover plates. A new beam coating should be considered to protect the repairs.
- Finger (expansion) joint repair.
- Plug joint repair.
- Removal of deteriorating deck concrete between the curbs and concrete fascia on both sides of both bridges as required. This would include total removal and replacement of all deck concrete along all fasciae at least back to the second girder. New outer deck concrete will provide a much stronger base for anchorage of the bridge rail. Deck widths would not increase.
- Clean or replace bearings.
- Replacement of bridge and approach rails.
- Removal of deteriorated concrete near beam seats and patching of those areas.
- Clean and repair cracked, spalled, and otherwise deteriorating substructure surfaces as necessary to inhibit moisture infiltration and prolong the service life of the substructures.
- Membrane and Paving

These tasks could be accomplished using any of the traffic maintenance methods referenced below.

Advantages: This alternative would address the structural deficiencies of the existing superstructure and deck and would add approximately 30 years to the life of the deck. A significant amount of the remaining service life in all elements would be utilized. This alternative would not require ROW acquisition and would have practically no permanent impacts on resources.

Disadvantages: The substandard shoulder widths, K-values, and sight distance would not be improved. Additional work on or possibly replacement of the deck would be required in approximately 30 years.

Alternative 2: Deck Replacement

Not all structural deficiencies on these bridges would be rectified by replacing the decks alone. The decks are rated as 7, good (30N) and 6, satisfactory (30S). Deck replacement offers an advantage over Alternative 1 in that the deteriorated curbs, joints, and fasciae will be restored and will last longer than repairs to these elements. Replacing the decks also gives the opportunity to add shear studs and increase the load capacity of both bridges. The remaining repair items listed in Alternative 1; beam repair and recoating, railings, beam seats, and substructure patching would still be recommended. The typical section would be very close to the existing. Overhangs might be pushed out slightly as allowed by structural limits.

Traffic could be maintained using any of the methods referenced below.

Advantages: A deck replacement would provide an additional service life of approximately 40 years. The installation of new bridge railing would be more reliable on a new deck.

Disadvantages: A deck replacement would not resolve several other structural deficiencies mentioned above. The substandard shoulder widths, K-values, and sight distance are also not improved.

Alternative 3: Superstructure Replacement

Alternative 3a: Superstructure Replacement (32' Typical)

The intent of this alternative would be to replace the superstructure beams rather than repairing them. The proposed 32' typical section widths would be only slightly wider than the existing 30'. This is approximately the maximum width deck that would be feasible without widening the substructures. The decks would have to be replaced as well. Replacement of bridge and approach rails, repair and patching of beam seats, and patching of substructure surfaces would still be recommended. It is assumed that new bearings would be installed. The existing substructures would remain in this alternative (with some repairs), and the intent would be to not significantly widen the structure and meet the width standards.

Traffic could be maintained during a superstructure and deck replacement using any of the methods described below, except that if a lateral slide is used, phasing would not be feasible. In addition to those concepts, less traditional methods of rapidly replacing the superstructure, such as a lateral slide, should be considered. A lateral slide consists of constructing the entire superstructure adjacent to the location where it is intended and physically pushing or pulling the structure into place along lubricated rails. During the actual slide, traffic would be maintained by off-site detour or via the exit ramps. While this may normally be feasible for a project like this, the presence of bedrock outcrops, particularly on the west side of the project, and the presence of on and off ramps probably precludes a lateral slide. Constructing the bridge nearby and then carrying it to its proper location as a unit, as would be done using self-propelled modular transporters, does not seem feasible due to the presence of ramps and bedrock.

Included in the discussion of Alternative 3a should be rapid construction techniques using Prefabricated Bridge units (PBUs) or NEXT Beams, to shorten the duration of traffic disruption. In this method, components of the bridge superstructure are fabricated on or near the site in sizes that are manageable by crane. They are moved and then lifted into place during a closure and have the advantage of shortening closures. Twenty-four-hour curing periods are required for the closure pours between units, requiring closures for this amount of time.

Traffic management during Alternative 3a could be any of the feasible methods described below. If phasing were chosen, a final closure pour would be required without traffic for the period of time required to reach the specified concrete strength, usually less than 24 hours. In this scenario, using the on and off ramps for detours would be feasible for a closure of this duration, if timed appropriately.

Alternative 3b: Superstructure Replacement (38' Typical)

This alternative would be similar to 3a, except that the decks, superstructures, and approach roadway within the project limits would be widened. The superstructures would be widened 1' on the passing

lane side of each bridge and 7' on the travel lane side of each bridge, to achieve a standard lane and shoulder width. The substructure could remain the same on the passing side with all widening done on the travel lane side of each bridge. There are four substructure units under each bridge, two abutments and two piers each. The piers are quite close to the VT Route 131 shoulders, and are shielded by guardrail. The substructures are believed to be founded on a combination of pile and spread footings, with piers generally on spread footings on bedrock, and abutments on a combination of piles and spread footings on soil. Expansion of the pier footings would require a braced excavation to protect the existing roadway, but cofferdams will not be required. The bottoms of existing pier footings are on the order of 8' below the roadway surface at Bridge 30S and 16' below at Bridge 30N.

Traffic could be maintained using any of the options described below. If phasing were chosen, a final closure pour would be required without traffic for a specific curing period similar to Alternative 3a. In this scenario, using the on and off ramps for detours would be feasible for a closure of this duration, if timed appropriately.

Advantages: Alternatives 3a and 3b would replace the damaged beams and replace the deck. Alternative 3b furthermore widens the typical sections so that the standard lane and shoulder widths are provided. There are opportunities for rapid construction techniques to be used for both variations.

Disadvantages: The substandard shoulder widths, K-values, and sight distance would not be improved by Alternative 3a, but shoulder widths would be standard for 3b.

Alternative 4: Complete Replacement

A complete replacement would address all of the substandard features within the project limits. However, rather than expanding the existing substructures and leaving portions of 50-plus year old concrete, all bridge components would be replaced with new components. Lane and shoulder widths would be constructed to standard. Alignment and grade would not substantially change. The bridge typical section, alignment, and grade would remain the same. Although K-values and sight distances are substandard, correcting them is not recommended since it would involve lowering the bridges and rebuilding a portion of the approaches.

This alternative would allow traffic to be maintained with any of the options described above, including on- and off-site detours, temporary bridge, or phased construction.

Advantages: All new bridge components are provided with a full 100-year service life.

Disadvantages: This alternative is the most costly up front and would take the longest to build.

IV. Maintenance of Traffic

The Design Hourly Volume in this area of I-91 is and is projected to be less than 1000, which is below the threshold of 1250 for maintaining two lanes of traffic during peak hours. It is therefore feasible to reduce traffic down to one lane if needed during the work. Another consideration for this project is that VT 131 will be affected, depending on the alternative chosen and the particular operations going on at any time. Periodic short term lane closures on VT 131 will likely be required for all alternatives except

the no-action alternative, and in addition to any traffic maintenance option chosen. These closures should not occur during peak hours due to the high traffic volume on VT 131.

The following options were considered:

Option 1: Off-Site Detour

An off-site detour closes the bridge and approaches and detours traffic off-site and around the project site. This project is located at Exit 8, so an off-site detour could involve routing traffic off the interstate onto the exit 8 ramps, crossing VT 131, and back onto the entry ramps. Temporary traffic signals would be needed at the two VT 131 crossings.

Another possible off-site detour scenario would be to have traffic exit at the nearest exits, which would be exits 7 and 9, and detour traffic onto US Route 5. Exit 7 is near mile 41, exit 8 near mile 51, and exit 9 near mile 60. The mileage would be virtually the same, although the time required to travel the detour would be longer than traveling the interstate. According to common navigation software, the time element would change from 17 minutes on I-91 to 30 minutes via US 5. This detour would travel through the villages of Ascutney and Windsor.

If an alternative is selected where an off-site detour appears to be desirable, further investigation through the VTrans traffic research section could be warranted, to determine the effects on both I-91 traffic and VT 131 traffic.

Option 2: On-Site Detour with Temporary Bridge

A temporary bridge could be used if traffic were required to be completely removed from the roadway. A one lane temporary bridge could be used for each direction. It is likely that a temporary bridge accommodating a lane for both directions could be fit into the space between the two bridges, although the shoulders may need to be reduced. This would allow both bridges to be closed so that work could proceed on both concurrently. Neither utility relocation nor additional ROW would be required to implement this configuration. The temporary bridge span would be similar to the existing spans, and some approach work would be required to temporarily fill in the median area to reach the appropriate grade. It is not likely that temporary bridges would fit on the outside of the existing bridges due to interference with the ramps and in some areas large bedrock outcrops.

Advantages: Traffic flow would be maintained through the I-91 project corridor during construction. Access to all on and off ramps would be maintained during the work period.

Disadvantages: This would be a costly method of maintaining traffic. There would be some delays as a speed reduction would be used and all traffic would be reduced to one lane. This method, while more expensive to build than crossovers, would not have any advantages in terms of efficiency of traffic flow over crossovers. Periodic lane closures outside of peak hours on VT 131 would be required.

In view of this option consisting of a major construction project by itself, before work on the permanent construction begins, and again afterward when the temporary bridge needs to be removed, this option for traffic management will not be developed further in this report.

Option 3: Phased Construction

Phased construction is the maintenance of one lane of traffic on the existing bridge while working on the other lane. The project begins with traffic being constricted to one lane, while work is done on the other. After completion of improvements to the first lane, traffic is switched to the completed lane and work proceeds on the second lane. Traffic flow is constant, although delayed due to slower speeds in the work zone. In the case of Interstate bridges, phasing is usually appropriate only for repairs or replacement of deck and/or railing. For bridges 30N&S, DHV volumes are below the 1250 vehicles per hour cutoff that guidance allows for one lane during peak hours, therefore phasing could be considered for a reasonable period of time without needing to reopen both lanes. Periodic short term lane closures on VT 131 would be necessary to provide access to crews working on the superstructures from below. These closures would not be advised during peak hours because of the high peak hourly volumes on VT 131.

Advantages: Traffic flow is maintained through the corridor during the project. Phasing the work allows the work to proceed one lane at a time without the expense of a temporary bridge or crossovers and without the inconvenience of a closure and detour.

Disadvantages: Compared to a closure and detour or a temporary bridge scenario, it takes longer and costs more to construct, rehabilitate, or repair a bridge project in phases because some of the construction tasks have to be performed multiple times and cannot be performed concurrently. Additional permit requirements may come into play. The safety risks for both workers and travelers are also increased due to the close proximity to each other. Some structural qualities, such as joints, demand more coordination time and may suffer in quality as well. Periodic lane closures outside of peak hours on VT 131 would be required.

Option 4: On-Site Detour with Crossovers

Crossovers involve closing the bridge and approaches and routing traffic through the median into the other barrel, using one lane of the opposing direction for the detoured traffic, and reserving the other lane for the original direction. After completion of work on the first bridge, the direction would be switched and work on the second bridge completed. A crossover is similar to phasing, with only one lane available for each direction, but the ability to open up both lanes in each direction during peak hours is lost. Crossovers for this project would have to be located such that the exit and entry ramps could still be used. Sight distances should be checked to determine the operation speed for the work zone.

Advantages: This would provide the advantage of a temporary bridge or phased construction by maintaining traffic along the existing corridor during construction. Traffic is removed from the work area, but the corridor remains open.

Disadvantages: Crossovers are expensive, sometimes approaching the cost of temporary bridges. Also similar to temporary bridges, changes in traffic patterns and speed increase the likelihood of crashes. Safety risks rise also due to potential stop conditions, the nearby exits, and by construction traffic entering or leaving the site. Periodic lane closures outside of peak hours on VT 131 would be required.

V. Alternatives Summary

There are four basic alternatives for improving bridge conditions on this project, and several ways to manage traffic during the improvements. There are some combinations of alternatives and traffic maintenance methods that can be eliminated before building the cost and engineering matrix that appears following this section.

Building a bridge or component in phases, because only part of the project can be done at a time, forces many construction activities to be done more than once, and forces some subcontractors to mobilize and demobilize more than once. Phasing also means work going on in close proximity to traffic, which increases safety risks for both workers and travelers, and also slows down the progress of the work. This drives up costs for a phased project compared to a project where a bridge or component is constructed away from traffic from start to finish in an uninterrupted manner. Costs go higher still, relative to a phased project, when a temporary bridge or a crossover is used to maintain traffic. However, as the size of the project increases, the cost associated with phasing the work approaches or exceeds the costs for other methods of maintaining traffic. Thus, for smaller scope alternatives, including rehabilitation and deck replacement, the method of traffic maintenance will consist of phasing construction or using the exit ramps as detours. For larger scope alternatives such as superstructure replacements and complete replacements, the method of traffic maintenance will consist of crossovers.

Based on the existing site, bridge, and traffic conditions, the following alternatives are presented:

Alternative 1a: Rehabilitation in phases, maintaining a minimum of one lane of traffic at all times
Alternative 1b: Rehabilitation, detouring traffic by using exit ramps
Alternative 2a: Deck replacement in phases, maintaining a minimum of one lane of traffic at all times
Alternative 2b: Deck replacement, detouring traffic by using exit ramps
Alternative 3a: Superstructure Replacement (32’ Typical) Utilizing a Cross-Over
Alternative 3b: Superstructure Replacement (38’ Typical) Utilizing a Cross-Over
Alternative 4: Complete Bridge Replacement Utilizing a Cross-Over

VI. Cost Matrix[1]

Weathersfield IM 091-1 (69)		Do Nothing	Alt 1a	Alt 1b	Alt 2a	Alt 2b	Alt 3a	Alt 3b	Alt 4
			Rehabilitation	Rehabilitation	Deck Replacement	Deck Replacement	Superstructure Replacement (32' Typical)	Superstructure Replacement (38' Typical)	Complete Bridge Replacement
			Phasing	Exit Ramps	Phasing	Exit Ramps	Cross-Over	Cross-Over	Cross-Over
COST	Bridge Cost	$0	$811,000	$737,000	$1,005,000	$914,00	$1,784,000	$2,912,000	$4,161,000
	Removal of Structure	$0	$123,000	$123,000	$263,000	$263,000	$329,000	$417,000	$583,000
	Roadway	$0	$239,000	$268,000	$273,000	$297,000	$395,000	$756,000	$897,000
	Maintenance of Traffic	$0	$181,000	$152,000	$181,000	$152,000	$556,000	$556,000	$556,000
	Construction Costs	$0	$1,354,000	$1,280,000	$1,722,000	1,626,000	$3,064,000	$4,641,000	$6,197,000
	Construction Engineering + Contingencies	$0	$405,000	$384,000	$517,000	$488,000	$920,000	$1,393,000	$1,859,000
	Total Construction Costs w CEC	**$0**	**$1,759,000**	**$1,664,000**	**$2,239,000**	**$2,114,000**	**$3,984,000**	**$6,034,000**	**$8,056,000**
	Preliminary Engineering[2]	**$0**	**$339,000**	**416,000**	**$431,000**	**$407,000**	**$766,000**	**$1,161,000**	**$1,549,000**
	Right of Way	**$0**	**$0**	**$0**	**$0**	**$0**	**$0**	**$0**	**$0**
	Total Project Costs	$0	$2,098,000	$2,080,000	$2,670,000	$2,521,000	$4,750,000	$7,195,000	$9,605,000
SCHEDULING	Project Development Duration[3]	NA	2 years	2 years	2 years	2 years	3 years	3 years	3 years
	Construction Duration	NA	18 months	18 months	24 months	24 months	24 months	24 months	24 months
	Closure Duration (If Applicable)	NA	NA	4 months	NA	4 months	NA	NA	NA
ENGINEERING	Typical Section - Roadway (feet)	37'	37'	37'	37'	37'	37'	38'	38'
	Typical Section - Bridge (feet)	3-12-12-3	3-12-12-3	3-12-12-3	4-12-12-4	4-12-12-4	4-12-12-4	4-12-12-10	4-12-12-10
	Geometric Design Criteria	No Change	No Change	No Change	No Change	No Change	No Change	No Change	No Change
	Traffic Safety	No Change	Improved	Improved	Improved	Improved	Improved	Improved	Improved
	Alignment Change	No	No	No	No	No	No	No	No
	Bicycle Access	NA	NA	NA	NA	NA	NA	NA	NA
	Hydraulic Performance	NA	NA	NA	NA	NA	NA	NA	NA
	Pedestrian Access	NA	NA	NA	NA	NA	NA	NA	NA
	Utility	No Change	No Change[4]	No Change[4]	No Change[4]	No Change[4]	No Change[4]	No Change[4]	No Change[4]
OTHER	ROW Acquisition	No	No	No	No	No	No	No	No
	Road Closure	No	No	Yes	No	Yes	No	No	No
	Design Life	<10 years	30 years	30 years	40 years	40 years	40 years	40 years	100 years

[1] Costs are estimates only, used for comparison purposes.
[2] Preliminary Engineering costs are estimated starting from the end of the Project Definition Phase.
[3] Project Development Durations are staring from the end of the Project Definition Phase
[4] There is State of Vermont owned weather sensing and reporting equipment near the bridges that may need to be temporarily relocated during the project.

VII. Conclusion

The recommendation is to proceed with Alternative 2a, deck replacement, using phased construction and periodic lane closures on VT 131.

Discussion:

The substructures are in satisfactory condition, rated 6 for both bridges. In all alternatives considered (except for the no-action alternative) the substructures, if not replaced, will be patched and repaired to preserve and enhance the remaining service life. The superstructures are rated 5 for both bridges, signifying fair condition. The superstructures on both bridges have been damaged by over-height vehicles from below; otherwise there are only occasional signs of minor surface corrosion. A study performed at the University of Massachusetts Amherst in 2009 indicated that the load ratings for both bridges are satisfactory, even considering the physical damage. This study included non-destructive load testing and finite element modelling. Again, in all cases but the no-action alternative, the superstructures will get repaired or replaced, and should also get a new coating to protect remaining service life. Repairing the superstructures may allow an upgrade in the superstructure rating to 6, but if not, it is assumed that the improvements gained from the repairs would hold the rating at 5 long enough to get to the next major rehab cycle or the replacement milestone.

The decks are rated 7, good, on Bridge 30N and 6, satisfactory, for Bridge 30S. Although the deck ratings are good enough that the ratings alone would not inspire action, there are portions of them that are in need of improvement to preserve the safety of the traveling public. Specifically, portions of the decks along the shoulders near the fasciae need to be addressed, and the joints are in very poor shape. The railings should be replaced with crash tested railings.

Because consideration was given to rehabilitation option (deck patching and beam repair) and keeping the major elements in service, testing of concrete samples was done in December, 2015 to ascertain the condition of the deck concrete both near the fasciae (shoulders) and in the travel lanes. The most significant deterioration was discovered near the curbs and in the shoulder areas, with less documented deterioration in the travel lanes. Concrete strengths were satisfactory in the areas tested except in some curb areas, where samples could not be recovered due to the crumbling nature of the concrete near the curbs. Findings from the laboratory test results indicate that chlorides have penetrated the shoulder and curb areas enough to raise concerns about accelerating deterioration. Since this deterioration will spread laterally into the lane areas, and the railings rely on the fascia and shoulder area concrete for sound anchorage, the rehabilitation alternatives, 1a and 1b were expanded to include the removal and replacement of the portions of the deck along the fasciae from the end of the overhang to the second girder. Alternatives 1a and 1b still are lowest on initial cost, but also offer the lowest design life into the future. After considering the test results, the following points were considered:

- The decks have received an overlay sometime in the past. The overlay consisted of removing the top 4”-6” to below the top mat and replacing it with a 3/8” concrete mix. The original concrete was not tested for chloride concentrations.
- These bridges carry I-91 over VT 131. It is known that salt spray raised from below can exacerbate chloride attacks from below.
- The original portions of the decks are over 50 years old. If portions of the decks are removed and replaced from the overhangs to the second girder, it is likely that the portions not removed will need additional effort in less than 30 years. It will be hard to predict the actual timing of the next rehab.

- A new deck can be made composite with the superstructure. This increases the load carrying capacity of the span.

Considering the testing done on the deck and the importance of the shoulder and fascia areas to the integrity of the bridges and railings, it is recommended that the decks be replaced and the other elements repaired as described above. It is more expensive to replace the decks by about $600,000 according to the scoping estimate. However, service life will be longer, safety aspects are improved, and uncertainties are removed.

Traffic maintenance options were discussed previously. It is believed that the traffic volumes and construction associated impacts would be low enough to allow for phased construction for portions of the work satisfactorily.

VIII. Appendices

- A. Site Pictures
- B. Town Map
- C. Bridge Inspection Reports
- D. Preliminary Geotechnical Information
- E. Natural Resources Memo
- F. Archaeology Memo
- G. Historic Memo
- H. Stormwater Memo
- I. Crash Data
- J. Plans
    - Existing Conditions
    - Proposed Conditions
        - Typical Sections
        - Layouts

Appendix A: Site Pictures

Bridge 30S Looking South

Bridge 30N Looking North

Bridge 30N Expansion Joint

Typical curb deterioration behind granite curb

Bridge 30S Pier crack

Typical Substructure Crack

Superstructure Damage

Superstructure Damage

Appendix B: Town Map

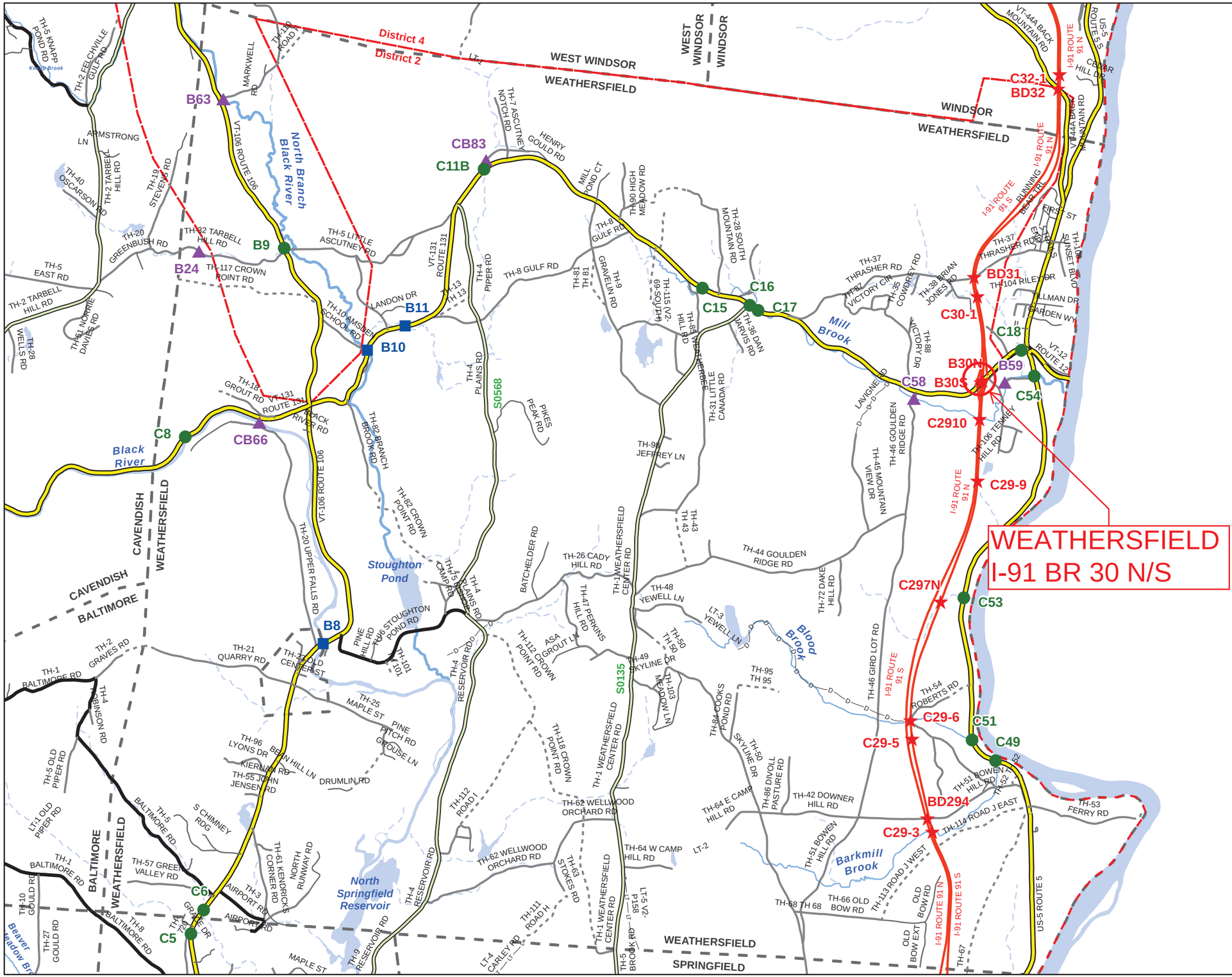

Scale 1:46,215

N

- INTERSTATE
- STATE LONG
- STATE SHORT
- TOWN LONG
- FAS/FAU
- FAS/FAU HWY
- INTERSTATE
- STATE HIGHWAY
- CLASS 1
- CLASS 2
- CLASS 3
- CLASS 4
- LEGAL TRAIL
- PRIVATE
- DISCONTINUED
- DISTRICT
- POLITICAL BOUNDARY
- NAMED RIVERS-STREAMS
- UNNAMED RIVERS-STREAMS

Produced by:
Mapping Unit
Vermont Agency of Transportation
August 2011

WEATHERSFIELD
WINDSOR COUNTY
DISTRICT # 2

Appendix C: Bridge Inspection Reports

STRUCTURE INSPECTION, INVENTORY and APPRAISAL SHEET

Vermont Agency of Transportation ~ Structures Section ~ Bridge Management and Inspection Unit

Inspection Report for WEATHERSFIELD **bridge no.:** 0030N **District:** 2

Located on: I 00091 ML **ove** I 91 OVER VT 131 **approximately** I 91 EXIT 8 **Owner:** 01 STATE-OWNED

CONDITION

Deck Rating: 7 GOOD

Superstructure Rating: 5 FAIR

Substructure Rating: 6 SATISFACTORY

Channel Rating: N NOT APPLICABLE

Culvert Rating: N NOT APPLICABLE

Federal Str. Number: 200091030N14202

Federal Sufficiency Rating: 069.7

Deficiency Status of Structure: ND

AGE and SERVICE

Year Built: 1965 **Year Reconstructed:** 0000

Service On: 1 HIGHWAY

Service Under: 1 HIGHWAY

Lanes On the Structure: 02

Lanes Under the Structure: 02

Bypass, Detour Length (miles): 00

ADT: 005250 **% Truck ADT:** 13

Year of ADT: 1998

GEOMETRIC DATA

Length of Maximum Span (ft): 0085

Structure Length (ft): 000219

Lt Curb/Sidewalk Width (ft): 0.7

Rt Curb/Sidewalk Width (ft): 0.7

Bridge Rdwy Width Curb-to-Curb (ft): 30

Deck Width Out-to-Out (ft): 35

Appr. Roadway Width (ft): 037

Skew: 48

Bridge Median: 1 OPEN MEDIAN

Min Vertical Clr Over (ft): 99 FT 99 IN

Feature Under: HIGHWAY BENEATH STRUCTURE

Min Vertical Underclr (ft): 15 FT 00 IN

STRUCTURE TYPE and MATERIALS

Bridge Type: 3 SP CONT ROLLED BM

Number of Approach Spans 0000 **Number of Main Spans:** 003

Kind of Material and/or Design: 4 STEEL CONTINUOUS

Deck Structure Type: 1 CONCRETE CIP

Type of Wearing Surface: 6 BITUMINOUS

Type of Membrane 2 PREFORMED FABRIC

Deck Protection: 0 NONE

APPRAISAL *AS COMPARED TO FEDERAL STANDARDS

Bridge Railings: 1 MEETS CURRENT STANDARD

Transitions: 1 MEETS CURRENT STANDARD

Approach Guardrail 1 MEETS CURRENT STANDARD

Approach Guardrail Ends: 1 MEETS CURRENT STANDARD

Structural Evaluation: 5 BETTER THAN MINIMUM TOLERABLE CRITERIA

Deck Geometry: 4 MEETS MINIMUM TOLERABLE CRITERIA

Underclearances Vertical and Horizontal: 6 EQUAL TO MINIMUM CRITERIA

Waterway Adequacy: N NOT OVER WATER

Approach Roadway Alignment: 8 EQUAL TO DESIRABLE CRITERIA

Scour Critical Bridges: N NOT OVER WATERWAY

DESIGN VEHICLE, RATING, and POSTING

Load Rating Method (Inv): 1 LOAD FACTOR (LF)

Posting Status: A OPEN, NO RESTRICTION

Bridge Posting: 5 NO POSTING REQUIRED

Load Posting: 10 NO LOAD POSTING SIGNS ARE NEEDED

Posted Vehicle: POSTING NOT REQUIRED

Posted Weight (tons):

Design Load: 5 HS 20

INSPECTION and CROSS REFERENCE

X-Ref. Route: VT131

Insp. Date: 052014 **Insp. Freq. (months)** 24 **X-Ref. BrNum:** 0017B

INSPECTION SUMMARY and NEEDS

5/20/2014 Curbs and fascias should be cleaned and patched. Spalling in the seat area should be patched. beams should be cleaned and painted soon. ~FRE/TJB

5/11/2012 Spalling in the seat area should be cleaned and patched. Curbs also should be cleaned of all loose concrete and patched. ~FRE/SJH

04/13/10 Significant repairs are needed along both curb areas. Steel beams with previous collision damage need repairs. PLB

5/14/08 This structure is in satisfactory to good condition. The deck wearing surface is in poor condition . There is a paving project going on in the area and the deck may be stripped and repaved. There are some scrape marks in beams 1, 2, & 4 in the bottom flanges from over height vehicles. Beam 2 is bent some and there is a ding in the bottom flange. The minimum vertical clearance was measured to be 15'-0" at the center line of the west fascia beam. DCP

STRUCTURE INSPECTION, INVENTORY and APPRAISAL SHEET

Vermont Agency of Transportation ~ Structures Section ~ Bridge Management and Inspection Unit

Inspection Report for WEATHERSFIELD **bridge no.:** 0030S **District:** 2

Located on: I 00091 ML **ove** I 91 OVER VT 131 **approximately** I 91 EXIT 8 **Owner:** 01 STATE-OWNED

CONDITION

Deck Rating: 6 SATISFACTORY

Superstructure Rating: 5 FAIR

Substructure Rating: 6 SATISFACTORY

Channel Rating: N NOT APPLICABLE

Culvert Rating: N NOT APPLICABLE

Federal Str. Number: 200091030S14202

Federal Sufficiency Rating: 069.7

Deficiency Status of Structure: ND

AGE and SERVICE

Year Built: 1965 **Year Reconstructed:** 0000

Service On: 1 HIGHWAY

Service Under: 1 HIGHWAY

Lanes On the Structure: 02

Lanes Under the Structure: 02

Bypass, Detour Length (miles): 00

ADT: 005250 **% Truck ADT:** 13

Year of ADT: 1998

GEOMETRIC DATA

Length of Maximum Span (ft): 0085

Structure Length (ft): 000219

Lt Curb/Sidewalk Width (ft): 0.7

Rt Curb/Sidewalk Width (ft): 0.7

Bridge Rdwy Width Curb-to-Curb (ft): 30

Deck Width Out-to-Out (ft): 35

Appr. Roadway Width (ft): 037

Skew: 48

Bridge Median: 1 OPEN MEDIAN

Min Vertical Clr Over (ft): 99 FT 99 IN

Feature Under: HIGHWAY BENEATH STRUCTURE

Min Vertical Underclr (ft): 15 FT 01 IN

STRUCTURE TYPE and MATERIALS

Bridge Type: 3 SP CONT ROLLED BM

Number of Approach Spans 0000 **Number of Main Spans:** 003

Kind of Material and/or Design: 4 STEEL CONTINUOUS

Deck Structure Type: 1 CONCRETE CIP

Type of Wearing Surface: 6 BITUMINOUS

Type of Membrane 2 PREFORMED FABRIC

Deck Protection: 0 NONE

APPRAISAL *AS COMPARED TO FEDERAL STANDARDS

Bridge Railings: 1 MEETS CURRENT STANDARD

Transitions: 1 MEETS CURRENT STANDARD

Approach Guardrail 1 MEETS CURRENT STANDARD

Approach Guardrail Ends: 1 MEETS CURRENT STANDARD

Structural Evaluation: 5 BETTER THAN MINIMUM TOLERABLE CRITERIA

Deck Geometry: 4 MEETS MINIMUM TOLERABLE CRITERIA

Underclearances Vertical and Horizontal: 6 EQUAL TO MINIMUM CRITERIA

Waterway Adequacy: N NOT OVER WATER

Approach Roadway Alignment: 8 EQUAL TO DESIRABLE CRITERIA

Scour Critical Bridges: N NOT OVER WATERWAY

DESIGN VEHICLE, RATING, and POSTING

Load Rating Method (Inv): 1 LOAD FACTOR (LF)

Posting Status: A OPEN, NO RESTRICTION

Bridge Posting: 5 NO POSTING REQUIRED

Load Posting: 10 NO LOAD POSTING SIGNS ARE NEEDED

Posted Vehicle: POSTING NOT REQUIRED

Posted Weight (tons):

Design Load: 5 HS 20

INSPECTION and CROSS REFERENCE

X-Ref. Route: VT131

Insp. Date: 052014 **Insp. Freq. (months)** 24 **X-Ref. BrNum:** 0017A

INSPECTION SUMMARY and NEEDS

5/20/2014 Both curbs should be cleaned and patched. Weep tubes should be extended past the bottom of the beams. Tear in the bottom flange of beam #2 should be monitored until repaired or replaced. There is on change in the tear from last inspection. Beams should be spot cleaned and painted. ~FRE/TJB

5/11/2012 Spalling in the seat area should be cleaned and patched. The tear in beam #2 should be repaired. Beams 1, 2 and 4 have a minor bends. The tear in beam two should be monitored until repair is made. ~FRE/SJH

04/13/10 Plug Joint No.1 is in need of repairs. Minor repairs are needed along both curb areas. Steel beams with previous collision damage need repairs. PLB

5/14/08 This structure is in satisfactory to good condition. There is a paving project going on in the area. The finger plate joint of abutment #2 sticks up 1/4 to 1/2" in the shoulder area in the direction of the travel lane. The plow could hit the joint and cause a accident. There are dings in beams 1, 2, and 4 in the bottom flange. There is a large crack in the bottom flange of beam #1 along the weld for the web. The crack was measured to be 21 1/4" long. No

Appendix D: Preliminary Geotechnical Information

AGENCY OF TRANSPORTATION **OFFICE MEMORANDUM**

To: Chris Williams, P.E., Structures Project Manager

NSM CCB

From: Nicholas S. Meltzer, P.E., Geotechnical Engineer, via Christopher C. Benda P. E., Soils and Foundations Engineer

Date: September 16, 2013

Subject: Weathersfield IM 091-1(69) Preliminary Geotechnical Information

In an effort to assist the Structures Section with their bridge type study, the Soils and Foundations Unit within the Materials and Research Section has completed a review of available geological data for Bridges 30 North and South on Interstate 91 in Weathersfield, which travels over VT-131. This review included our in-house bridge boring files, record plans, USDA Natural Resources Conservation soil survey records, surficial geology and bedrock maps of the State and the Agency of Natural Resources Well logs.

Previous Projects

Record plans were found for the project, which show the bridge abutments and piers supported on a combination of piles and spread footings. Abutment 1 is on two rows of piles, while Abutment 2 is a spread footing on soil. Both Pier 1 and Pier 2, each of which have three columns, are supported on spread footings founded on bedrock. No specific soil information was available. The Soils and Foundations Unit maintains a GIS based historical record of subsurface investigations, which contains electronic records for the majority of borings completed in the past 10 years. An exploration of this map revealed no nearby borings in Weathersfield

Water Well Logs

The Agency of Natural Resources (ANR) documents and publishes all water wells that are drilled for residential or commercial purposes. Published online, the logs can be used to determine general characteristics of soil strata in the area. The soil description given on the logs is done in the field, by unknown personnel, and as such, should only be used as an approximation. Five surrounding well logs were examined for depths to bedrock and soil strata.

Figure 1 contains the project and surrounding well locations. The specific wells used to gain information on the subsurface conditions are highlighted by red boxes.

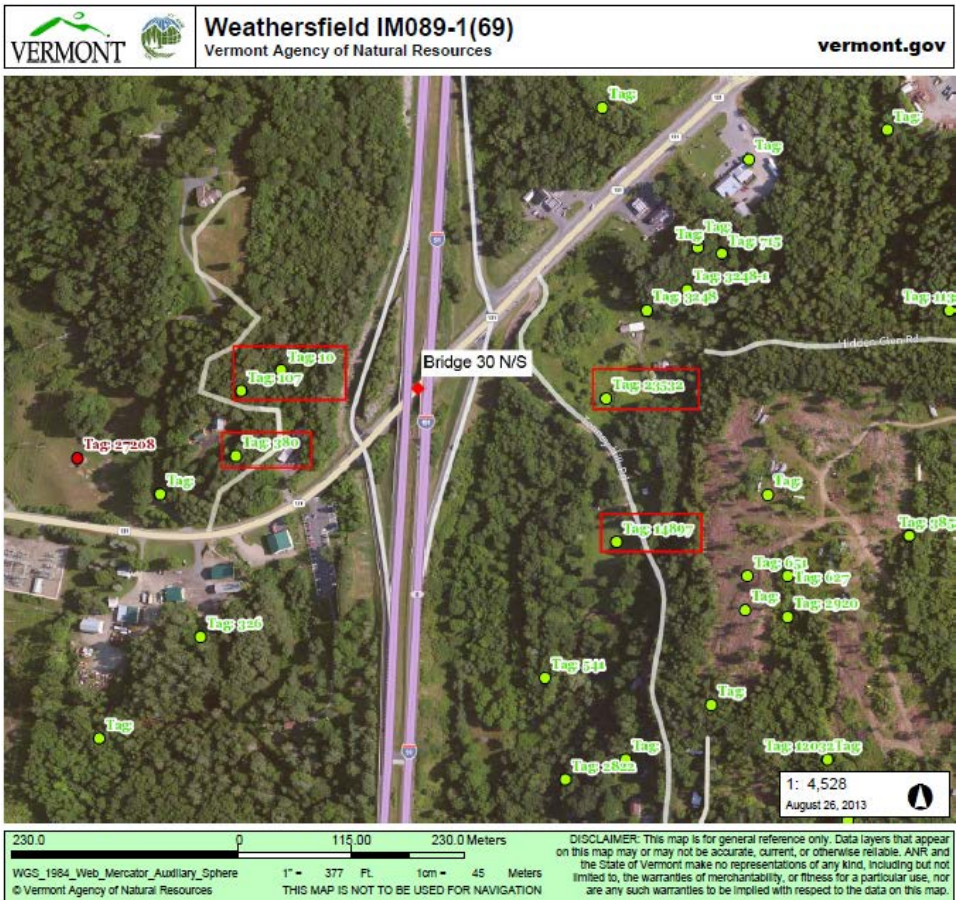

Figure 1. Highlighted well locations near subject project

Table 1 lists the well sites used in gathering the surrounding information. Wells are listed with the distance from the bridge project, and depth to bedrock encountered.

Table 1. Depths to bedrock of surrounding sites

Well Number	Distance From Project (feet)	Depth To Bedrock (feet)
10	450	9
107	600	2
380	650	5
23532	650	8
14897	850	26

USDA Soil Survey

The United States Department of Agriculture Natural Resources Conservation Service maintains a surficial geology map of the United States, which is available online. According to the Web Soil Survey, the strata directly underlying the project site consists of Glover-Vershire Complex, which is shallow to bedrock and excessively draining. Boulders and cobbles may be present.

A site visit was conducted to determine potential issues with boring operations, and to make any other pertinent observations about the project, Figure 2.

Figure 2. View of bridge, looking West

Borings for the abutments should be conducted in the roadway, while any borings for additional substructures can be completed below the bridge.

Abutment 2 of the southbound bridge is founded directly on bedrock, while the rest of the abutments are founded on 25’ long steel H piles. The piers are spread footings, founded on a combination of soil and rock. Although bedrock is visible directly under the southbound bridge, it can be concluded the bedrock elevation is variable throughout the site.

Two borings should be completed at each substructure to help ascertain the irregularities in the bedrock elevation. Due to the fact it is a dry crossing, loads are expected to be realatively small

and as such, the use of rapid construction techniques such as integral abutments with precast substructure elements possible.

Based on this information, possible foundation options for a bridge replacement include the following:

Abutments

- Pile caps on a single row of H-Piles
- Reinforced concrete abutments on spread footings
- Reinforced concrete abutments on mechanically stabilized earth (MSE) abutments

Piers

- Reinforced concrete abutments on spread footings
- Spread footings supported on micropiles

We recommend a minimum of two borings be taken at each abutment and a minimum of two at each additional substructure, in order to more fully assess the subsurface conditions at the site including, but not limited to, the soil properties, ground water conditions and depth to bedrock. If drilled shafts are contemplated, final borings should be aligned with the shaft location(s).

If you have any questions or would like to discuss this report, please contact us by phone at (802) 828-6910, or via email at chris.benda@state.vt.us.

cc: Project File/CCB
NSM

Appendix E: Natural Resources Memo

Goldstein, Lee

From: Lepore, John
Sent: Monday, December 02, 2013 1:01 PM
To: Goldstein, Lee
Cc: Williams, Chris; Lepore, John
Subject: WEATHERSFIELD IM 091-1 (69) --> Natural Resources ID

There are no regulated natural resources within the project limits as depicted on the plans dated 21-NOV-2013. The only resource that is close to the area appears on Sheet 2 of 25, and is a stream crossing at ~Station 698+25 (~ NB mile marker 51.1). This should not be an issue as it is approximately 500 feet south of the Exit 8 interchange.

No further review or permitting is necessary unless the scope of the project is expanded. If you have any questions, come see me…

~ John ~

Appendix F: Archaeological Memo

VERMONT

Jeannine Russell
VTrans Archaeology Officer
State of Vermont
Environmental Section
One National Life Drive
Montpelier, VT 05633-5001
www.aot.state.vt.us

[phone] 802-828-3981
[fax] 802-828-2334
[ttd] 800-253-0191

Agency of Transportation

To: Lee Goldstein, Environmental Specialist

From: Jeannine Russell, VTrans Archaeology Officer

Date: December 23, 2013

Subject: Weathersfield IM 091-1(69) – Archaeological Resource ID

This project consists of repair to beams and deck joints for Bridge 30 N/S on I-91 over VT 131 in Weathersfield. The project will be undertaken with one lane closure and no crossovers.

The VTrans Archaeology Officer has conducted an Archaeological Resources Assessment for the above project. Background research, ArcMap review of the site area was sufficient to determine that there are no archaeological resources or sensitive areas present within the proposed project area as currently planned.

A review of conceptual plans will be necessary prior to issuing a formal clearance. Please contact me if you have any questions.

Thank you,
Jen Russell
VTrans Archaeology Officer

VTrans Working to Get You There
Vermont Agency of Transportation

Appendix G: Historic Memo

Goldstein, Lee

From: Newman, Scott
Sent: Wednesday, December 04, 2013 12:53 PM
To: Goldstein, Lee
Cc: Williams, Chris; O'Shea, Kaitlin; Newman, Scott
Subject: Weathersfield IM 091-1(69) Resource ID

Lee,

I have completed the resource ID for this project. Note that the interstate highway system is a historic property, but is exempt from section 106 and 4(f) review in this location. I see no need to note it as a historic property on the plans.

Thanks.

D. Scott Newman
Historic Preservation Officer
Vermont Agency of Transportation
802.777.1572

Appendix H: Stormwater Memo

Goldstein, Lee

From: Armstrong, Jon
Sent: Wednesday, March 12, 2014 2:52 PM
To: Goldstein, Lee
Cc: Williams, Chris
Subject: RE: Environmental Request NOTIFICATION: WEATHERSFIELD IM 091-1(69)--resource ID requested

Hi Lee,
If this is just a deck replacement, it is unlikely to require an operational stormwater discharge permit. However, please be aware that if the impervious surfaces associated with the crossovers are planned to be left in place longer than 3 yrs they are not considered temporary and must be considered towards the jurisdictional threshold for an operational permit.
Let me know if you have any questions,
Jon

Jonathan B. Armstrong, PE
VTrans Stormwater Management Engineer
Program Development Div. - Environmental Section
One National Life Drive
Montpelier, VT 05633-5001
ph (802) 828-1332
fx (802) 828-2334
email: jon.armstrong@state.vt.us

"*We forget that the water cycle and the life cycle are one*."
- Jacques Cousteau

><((((º>`·.¸¸.·´¯`·.¸.·´¯`·...><((((º>¸.
·.¸.¸.·´`·.. ><((((º>`·.¸¸.·´`·.¸.·´¯`·...><((((º>

From: Goldstein, Lee
Sent: Tuesday, November 26, 2013 2:27 PM
To: Russell, Jeannine; Newman, Scott; Lepore, John; Armstrong, Jon
Cc: Gauthier, Brennan; O'Shea, Kaitlin; Brown, Jane
Subject: FW: Environmental Request NOTIFICATION: WEATHERSFIELD IM 091-1(69)--resource ID requested

Hi Folks!
This is a request for resource ID; repair of beams and deck joints for Bridge 30 N/S on I-91 over VT 131 with one-lane closure and no crossover. It is a 219' long, 3- span rolled beam bridge.
Project Information:
PIN - 13A096

Appendix I: Crash Data

Vermont Agency of Transportation

Statewide Sections - Route Log Order /2 - Statewide

Years: 2008 - 2012

H.C.L No.	/3.	Route	System	Town	Mileage	ADT	Years	Crashes	Fatalities	Injuries	PDO Crashes	Critical Rate	Actual Rate	Ratio Actual/Critical	Severity Index ($/Accident/1.)
429		I-91	Interstate, Rural (r)	Springfield	41.500 - 41.800	12250	5	9	0	2	7	1.145	1.341	1.172	$22,522
406		I-91	Interstate, Rural (r)	Springfield	45.900 - 46.200	11800	5	9	1	2	7	1.155	1.393	1.205	$179,189
530		I-91	Interstate, Rural (r)	Weathersfield	47.800 - 48.100	11800	5	8	0	5	4	1.155	1.238	1.071	$48,325
531		I-91	Interstate, Rural (r)	Weathersfield	48.800 - 49.100	11800	5	8	0	4	4	1.155	1.238	1.071	$39,550
407		I-91	Interstate, Rural (r)	Weathersfield	49.900 - 50.200	11800	5	9	0	5	5	1.155	1.393	1.205	$43,944
559		I-91	Interstate, Rural (r)	Windsor	55.100 - 55.400	14300	5	9	0	4	6	1.103	1.149	1.042	$37,133
184		I-91	Interstate, Rural (r)	Windsor	58.000 - 58.300	14300	5	14	0	3	12	1.103	1.788	1.621	$22,671
458		I-91	Interstate, Rural (r)	Hartford	69.800 - 70.100	27004	5	16	0	7	13	0.953	1.082	1.134	$37,944
503		I-91	Interstate, Rural (r)	Thetford	86.600 - 86.900	9600	5	7	0	0	7	1.216	1.331	1.094	$8,900
57		I-91	Interstate, Rural (r)	Bradford	97.700 - 98.000	5300	5	9	1	2	7	1.417	3.101	2.188	$179,189
254		I-91	Interstate, Rural (r)	Bradford	98.300 - 98.600	5300	5	6	0	1	5	1.417	2.067	1.459	$19,117
394		I-91	Interstate, Rural (r)	Bradford	98.800 - 99.100	5300	5	5	0	1	4	1.417	1.723	1.216	$21,160
395		I-91	Interstate, Rural (r)	Bradford	100.200 - 100.500	5300	5	5	0	0	5	1.417	1.723	1.216	$8,900
157		I-91	Interstate, Rural (r)	Newbury	104.000 - 104.300	5300	5	7	0	3	6	1.417	2.412	1.702	$37,714
252		I-91	Interstate, Rural (r)	Newbury	105.900 - 106.200	5300	5	6	1	3	3	1.417	2.067	1.459	$274,550
58		I-91	Interstate, Rural (r)	Newbury	106.300 - 106.600	5300	5	9	0	0	9	1.417	3.101	2.188	$8,900
255		I-91	Interstate, Rural (r)	Newbury	106.900 - 107.200	5300	5	6	0	0	6	1.417	2.067	1.459	$8,900
253		I-91	Interstate, Rural (r)	Newbury	107.400 - 107.700	5300	5	6	0	2	5	1.417	2.067	1.459	$30,817
159		I-91	Interstate, Rural (r)	Newbury	109.500 - 109.800	5300	5	7	0	0	7	1.417	2.412	1.702	$8,900
321		I-91	Interstate, Rural (r)	Newbury	110.500 - 110.800	4700	5	5	1	4	3	1.462	1.943	1.329	$343,500

Vermont Agency of Transportation

Statewide Sections - Route Log Order /2 - Statewide

Years: 2008 - 2012

H.C.L No.	/3.	Route	System	Town	Mileage	ADT	Years	Crashes	Fatalities	Injuries	PDO Crashes	Critical Rate	Actual Rate	Ratio Actual/Critical	Severity Index ($/Accident/1.)
	104	VT-116	Minor Arterial (r)	Middlebury	4.100 - 4.400	2105	5	7	0	0	7	3.233	6.073	1.878	$8,900
	188	VT-116	Minor Arterial (r)	Middlebury, Bristol	6.500 - 0.213	2100	5	6	0	4	2	3.235	5.218	1.613	$49,767
	446	VT-116	Minor Arterial (r)	Bristol	2.913 - 3.213	2600	5	5	0	1	4	3.061	3.512	1.147	$21,160
* #	76	VT-116	Minor Arterial (r)	Bristol	6.513 - 6.813	6285	5	17	0	4	14	2.449	4.94	2.016	$23,847
	445	VT-116	Minor Arterial (r)	Starksboro	1.948 - 2.248	2600	5	5	0	2	3	3.061	3.512	1.147	$33,420
	204	VT-116	Minor Arterial (r)	Hinesburg	2.178 - 2.478	4300	5	10	0	5	7	2.69	4.247	1.579	$41,330
	168	VT-116	Minor Arterial (r)	Hinesburg	4.378 - 4.678	9279	5	19	0	3	16	2.236	3.739	1.673	$18,579
	241	VT-116	Minor Arterial (r)	Hinesburg	4.678 - 4.978	9278	5	17	0	7	12	2.236	3.346	1.497	$35,188
	227	VT-116	Minor Arterial (r)	St. George	0.040 - 0.340	8413	5	16	0	3	14	2.286	3.473	1.519	$20,950
	319	VT-116	Principal Arterial (u)	South Burlington	3.913 - 4.213	9800	5	52	0	7	45	7.226	9.691	1.341	$17,152
	451	VT-117	Minor Arterial (r)	Jericho	0.069 - 0.369	4900	5	8	0	3	5	2.604	2.982	1.145	$31,888
	442	VT-117	Minor Arterial (r)	Jericho	0.869 - 1.169	4861	5	8	0	6	4	2.609	3.005	1.152	$57,100
	388	VT-118	Major Collector (r)	Montgomery	7.614 - 7.914	2256	5	5	0	0	5	3.316	4.048	1.22	$8,900
	91	VT-125	Major Collector (r)	Cornwall	0.273 - 0.573	1900	5	7	0	2	5	3.467	6.729	1.94	$26,414
	142	VT-125	Major Collector (r)	Middlebury	2.415 - 2.715	2180	5	7	0	0	7	3.346	5.864	1.753	$8,900
	153	VT-131	Major Collector (r)	Weathersfield	1.548 - 1.848	3600	5	10	0	8	6	2.94	5.073	1.726	$61,500
	591	VT-131	Major Collector (r)	Weathersfield	8.048 - 8.348	7281	5	10	0	3	7	2.473	2.508	1.014	$27,290
	278	VT-133	Major Collector (r)	Ira, Clarendon	4.484 - 0.004	2400	5	6	0	4	3	3.263	4.566	1.399	$51,250
	22	VT-142	Major Collector (r)	Vernon	3.700 - 4.000	1912	5	10	0	4	8	3.462	9.552	2.759	$35,200

Appendix J: Plans

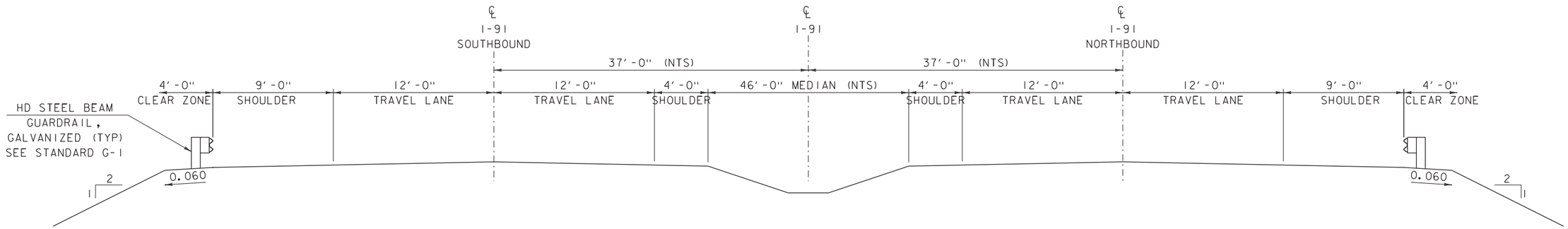

EXISTING ROADWAY TYPICAL SECTION

SCALE 1/4" = 1'-0"

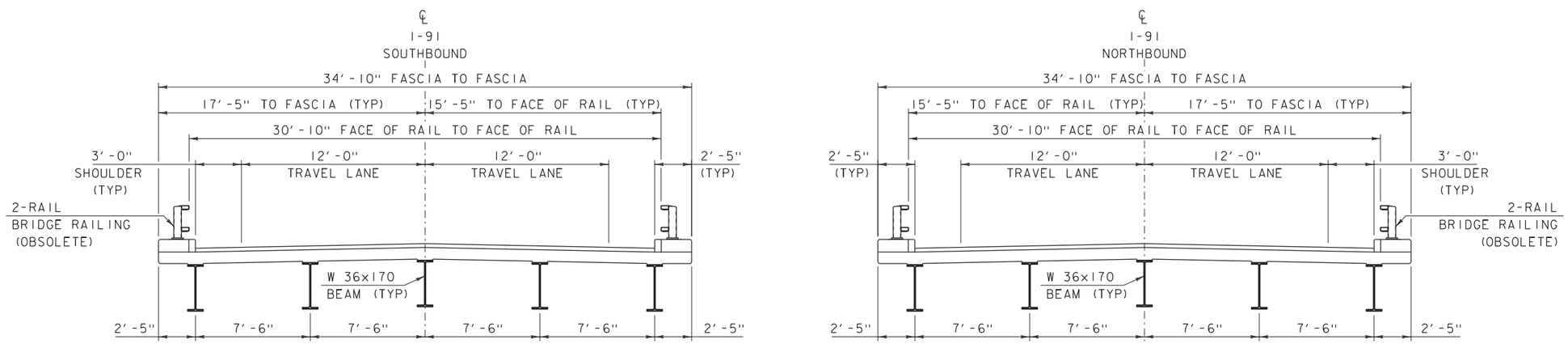

EXISTING BRIDGE TYPICAL SECTION

SCALE 1/4" = 1'-0"

EXISTING DIMENSIONS AND SIZES HAVE
NOT BEEN VERIFIED IN THE FIELD

PROJECT NAME: WEATHERSFIELD	
PROJECT NUMBER: IM 091-1(69)	
FILE NAME: 13a096/s13a096typ.dgn	PLOT DATE: 14-JUL-2015
PROJECT LEADER: J.FITCH	DRAWN BY: D.D.BEARD
DESIGNED BY: G.SWEENY	CHECKED BY: G.SWEENY
EXISTING TYPICAL SECTIONS	SHEET 1 OF 32

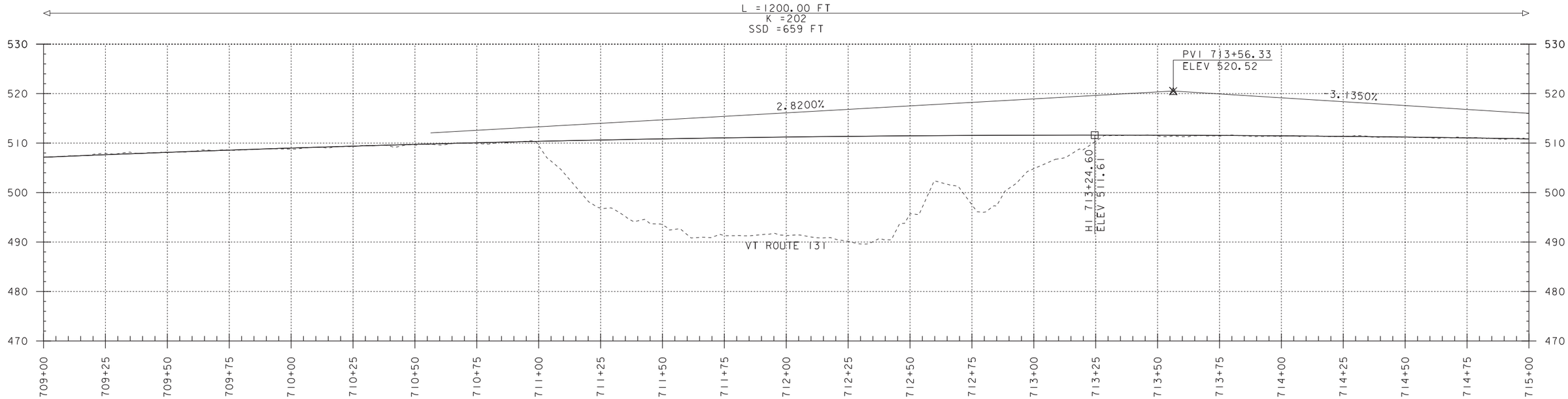

I-91 EXISTING SOUTHBOUND PROFILE

SCALE: HORIZONTAL 1" = 20'-0"
VERTICAL 1" = 10'-0"

NOTE:
GRADES SHOWN TO THE NEAREST TENTH ARE EXISTING GROUND ALONG ℄
GRADES SHOWN TO THE NEAREST HUNDREDTH ARE FINISH GRADE ALONG ℄

PROJECT NAME: WEATHERSFIELD	
PROJECT NUMBER: IM 091-1(69)	
FILE NAME: 13a096/sl3a096profile.dgn	PLOT DATE: 14-JUL-2015
PROJECT LEADER: J.FITCH	DRAWN BY: D.D.BEARD
DESIGNED BY: G.SWEENY	CHECKED BY: G.SWEENY
I-91 SOUTHBOUND PROFILE	SHEET 2 OF 32

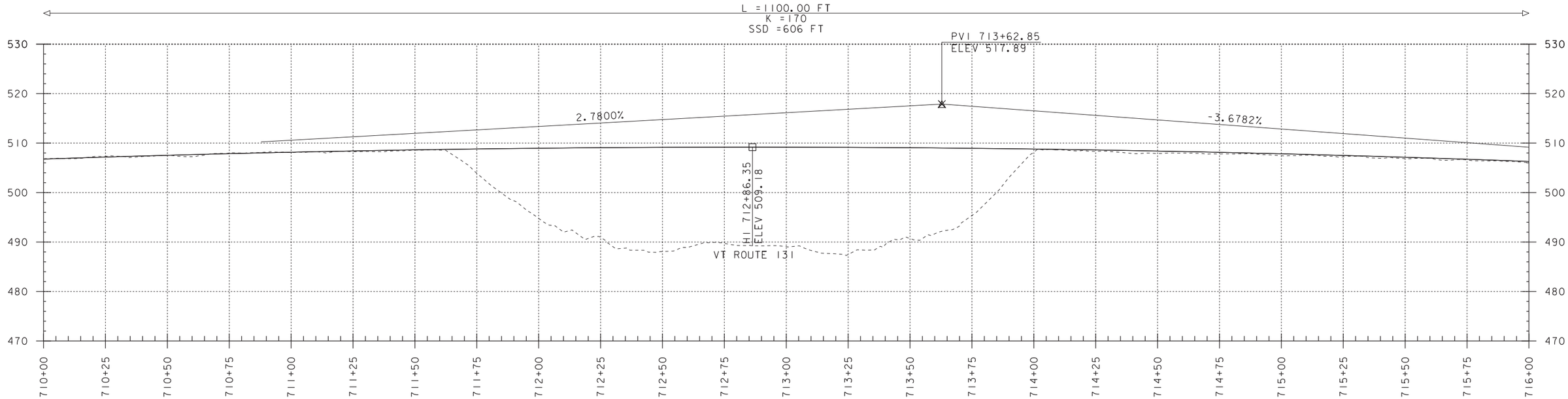

I-91 EXISTING NORTHBOUND PROFILE

SCALE: HORIZONTAL 1" = 20'-0"
VERTICAL 1" = 10'-0"

NOTE:
GRADES SHOWN TO THE NEAREST TENTH ARE EXISTING GROUND ALONG ℄
GRADES SHOWN TO THE NEAREST HUNDREDTH ARE FINISH GRADE ALONG ℄

PROJECT NAME: WEATHERSFIELD	
PROJECT NUMBER: IM 091-1(69)	
FILE NAME: 13a096/sl3a096profile.dgn	PLOT DATE: 14-JUL-2015
PROJECT LEADER: J.FITCH	DRAWN BY: D.D.BEARD
DESIGNED BY: G.SWEENY	CHECKED BY: G.SWEENY
I-91 NORTHBOUND PROFILE	SHEET 3 OF 32

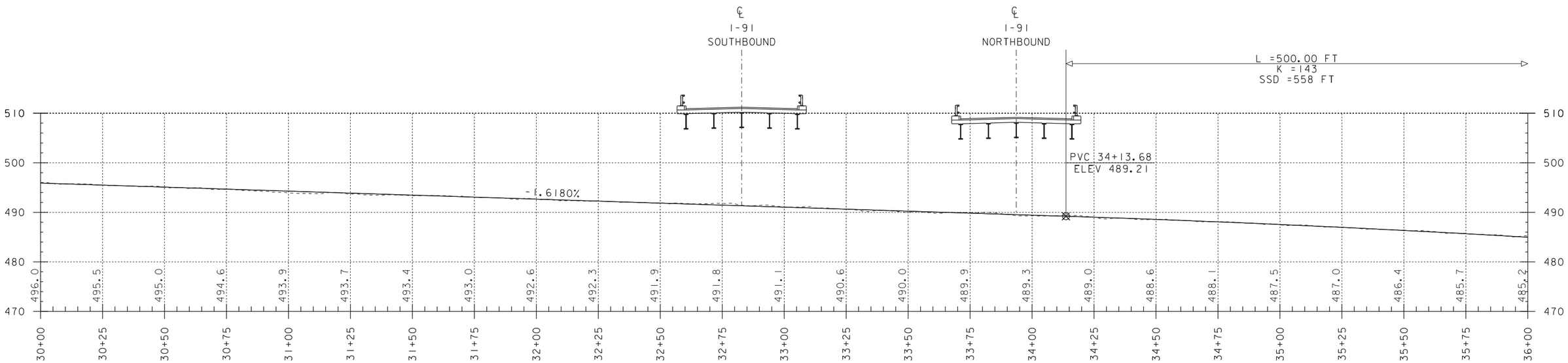

VT ROUTE 131 EXISTING PROFILE

SCALE: HORIZONTAL 1" = 20'-0"
VERTICAL 1" = 10'-0"

NOTE:
GRADES SHOWN TO THE NEAREST TENTH ARE EXISTING GROUND ALONG ℄
GRADES SHOWN TO THE NEAREST HUNDREDTH ARE FINISH GRADE ALONG ℄

PROJECT NAME: WEATHERSFIELD	
PROJECT NUMBER: IM 091-1(69)	
FILE NAME: 13a096/sl3a096profile.dgn	PLOT DATE: 14-JUL-2015
PROJECT LEADER: J.FITCH	DRAWN BY: D.D.BEARD
DESIGNED BY: G.SWEENY	CHECKED BY: G.SWEENY
VT ROUTH 131PROFILE	SHEET 4 OF 32

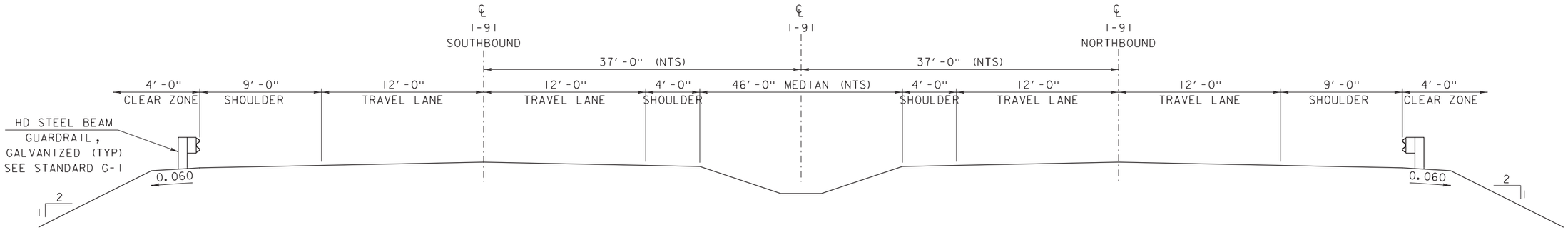

PROPOSED ROADWAY TYPICAL SECTION

SCALE 1/4" = 1'-0"

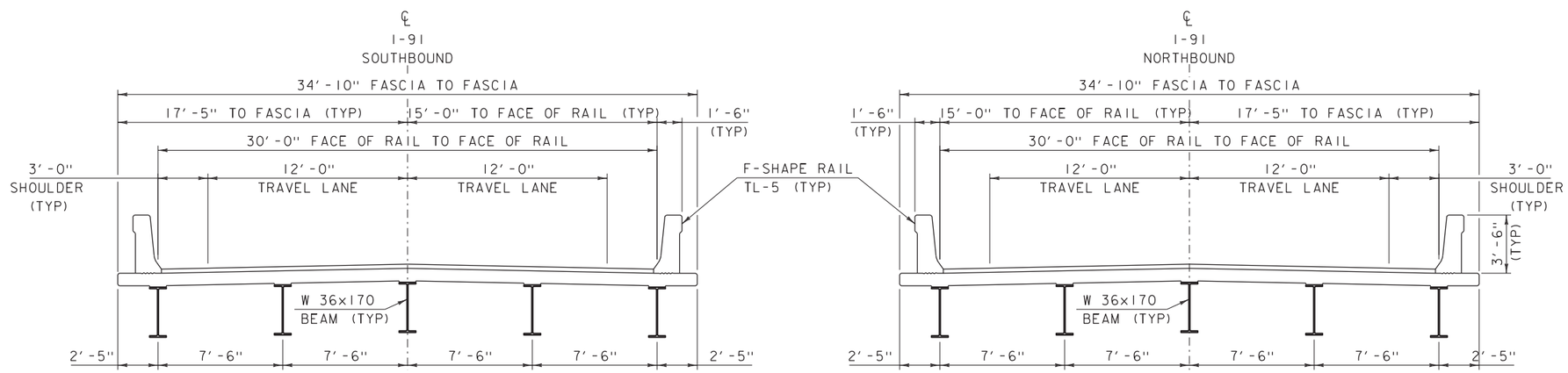

ALTERNATIVE 1 BRIDGE TYPICAL SECTION

SCALE 1/4" = 1'-0"

EXISTING DIMENSIONS AND SIZES HAVE
NOT BEEN VERIFIED IN THE FIELD

PROJECT NAME: WEATHERSFIELD	
PROJECT NUMBER: IM 091-1(69)	
FILE NAME: 13a096/s13a096typ.dgn	PLOT DATE: 14-JUL-2015
PROJECT LEADER: J.FITCH	DRAWN BY: D.D.BEARD
DESIGNED BY: G.SWEENY	CHECKED BY: G.SWEENY
ALTERNATIVE 1 TYPICAL SECTIONS	SHEET 5 OF 32

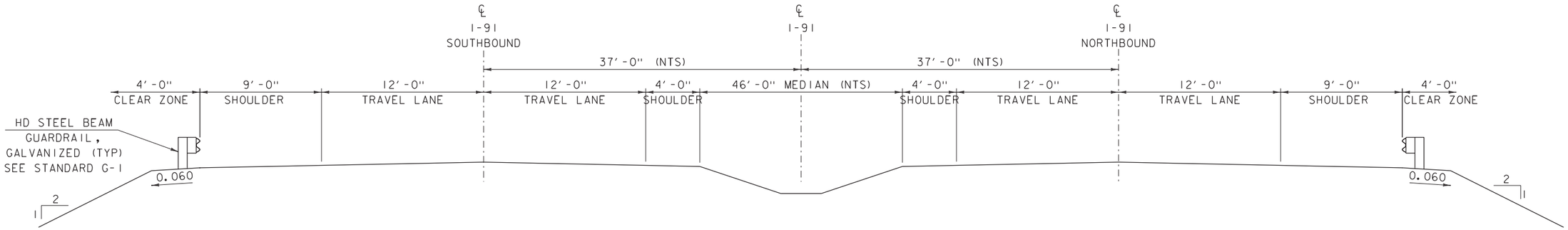

PROPOSED ROADWAY TYPICAL SECTION

SCALE 1/4" = 1'-0"

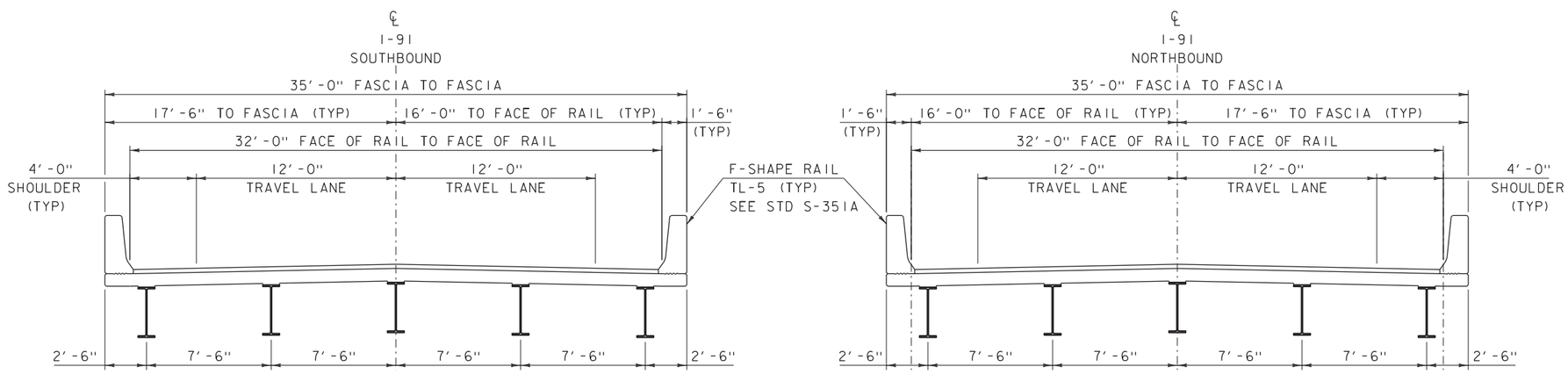

ALTERNATIVE 2 & 3A BRIDGE TYPICAL SECTION

SCALE 1/4" = 1'-0"
IF NEW SUPERSTRUCTURE IS PLANNED,
DESIGN WILL BE DONE AT A FUTURE TIME

EXISTING DIMENSIONS AND SIZES HAVE
NOT BEEN VERIFIED IN THE FIELD

PROJECT NAME: WEATHERSFIELD	
PROJECT NUMBER: IM 091-1(69)	
FILE NAME: 13a096/s13a096typ.dgn	PLOT DATE: 14-JUL-2015
PROJECT LEADER: J.FITCH	DRAWN BY: D.D.BEARD
DESIGNED BY: G.SWEENY	CHECKED BY: G.SWEENY
ALTERNATIVE 2 & 3A TYPICAL SECTIONS	SHEET 6 OF 32

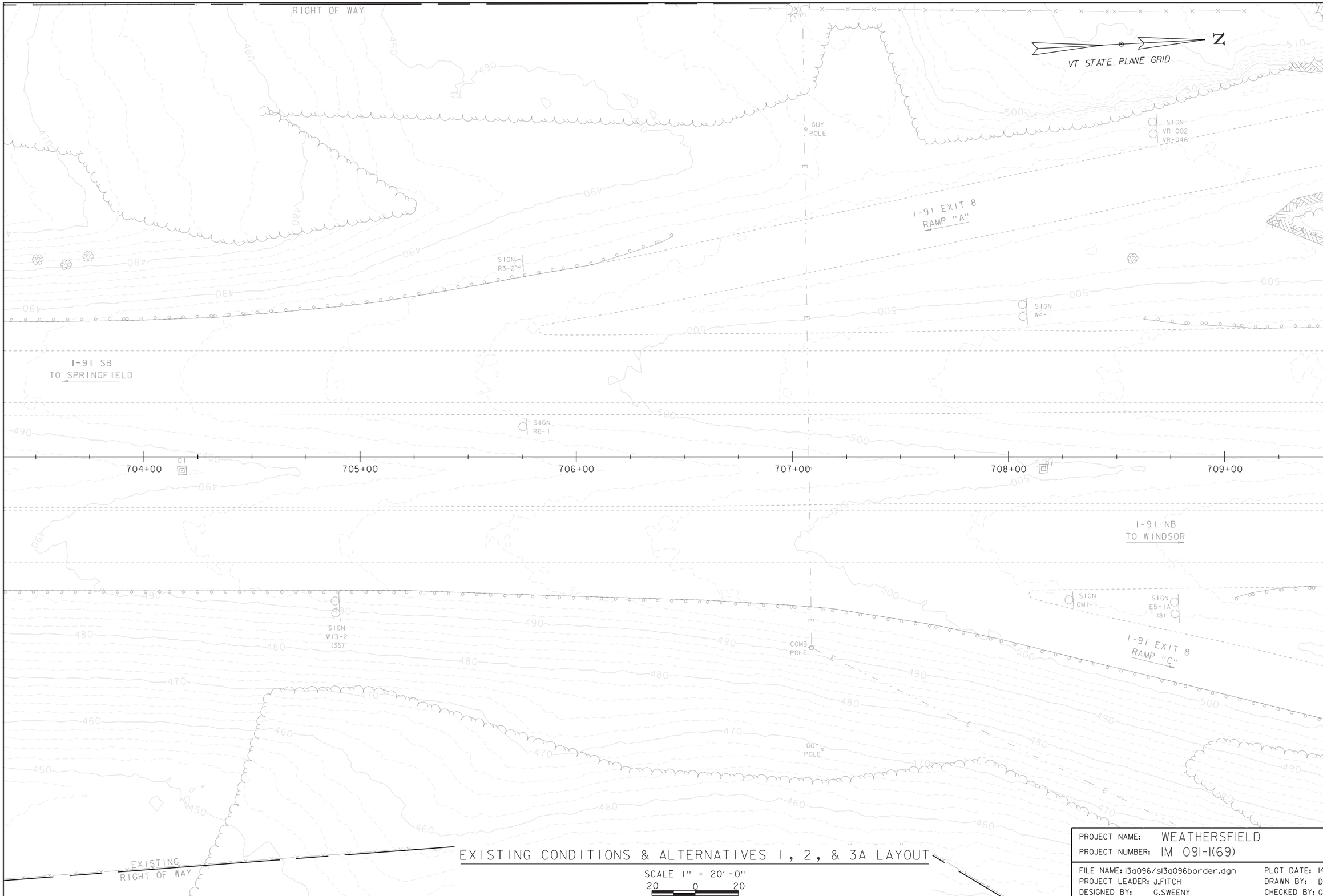

EXISTING CONDITIONS & ALTERNATIVES 1, 2, & 3A LAYOUT

SCALE 1" = 20'-0"

20 0 20

PROJECT NAME: WEATHERSFIELD	
PROJECT NUMBER: IM 091-1(69)	
FILE NAME: 13a096/sl3a096border.dgn	PLOT DATE: 14-JUL-2015
PROJECT LEADER: J.FITCH	DRAWN BY: D.D.BEARD
DESIGNED BY: G.SWEENY	CHECKED BY: G.SWEENY
LAYOUT SHEET 1	SHEET 7 OF 32

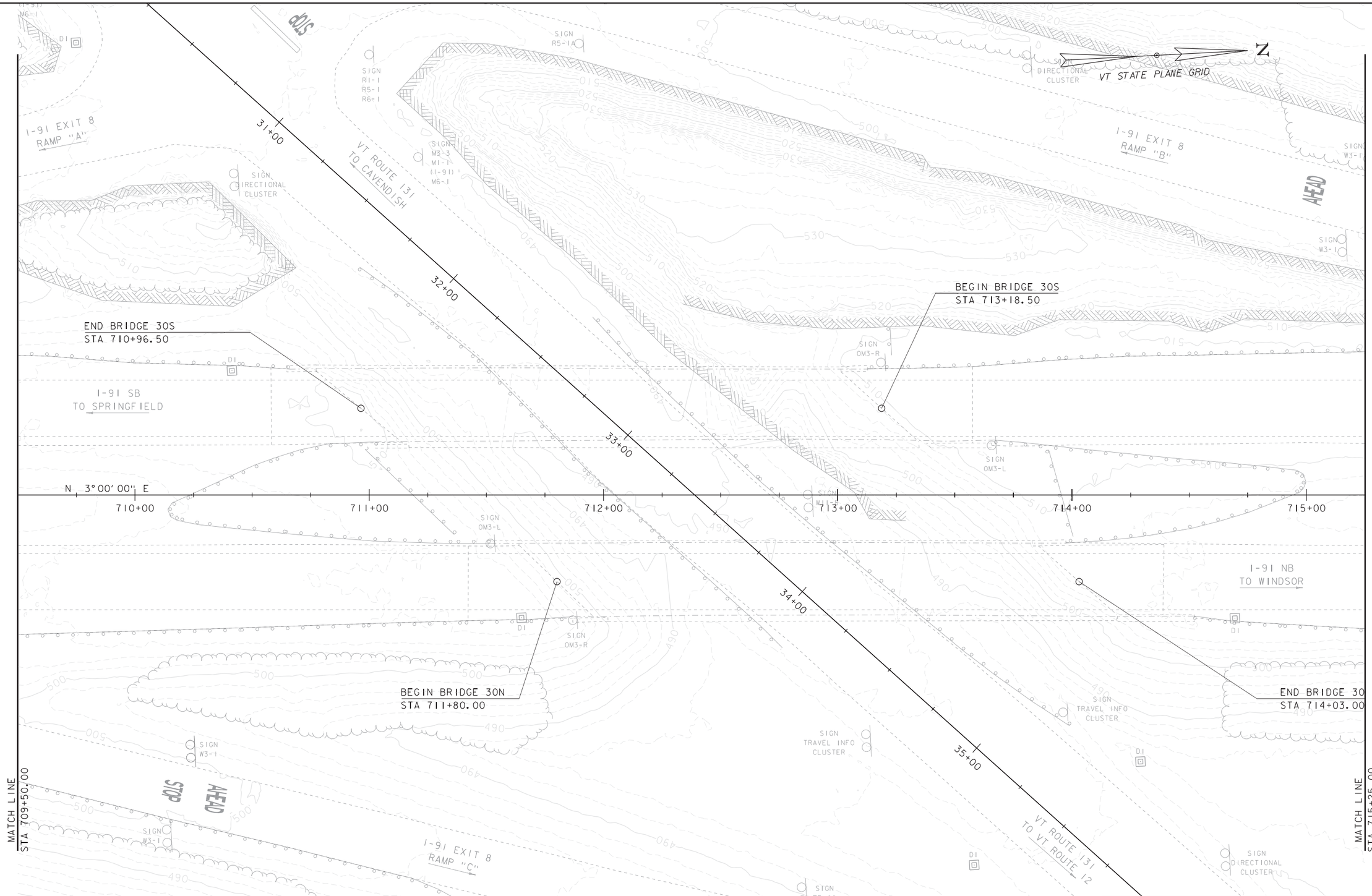

EXISTING BRIDGE INFORMATION
219' LONG 3-SPAN BRIDGE (BOTH)
CONTINUOUS ROLLED BEAM
BUILT 1965

EXISTING CONDITIONS & ALTERNATIVES 1, 2, & 3A LAYOUT

SCALE 1" = 20'-0"
20 0 20

PROJECT NAME: WEATHERSFIELD	
PROJECT NUMBER: IM 091-1(69)	
FILE NAME: 13a096/sl3a096border.dgn	PLOT DATE: 14-JUL-2015
PROJECT LEADER: J.FITCH	DRAWN BY: D.D.BEARD
DESIGNED BY: G.SWEENY	CHECKED BY: G.SWEENY
LAYOUT SHEET 2	SHEET 8 OF 32

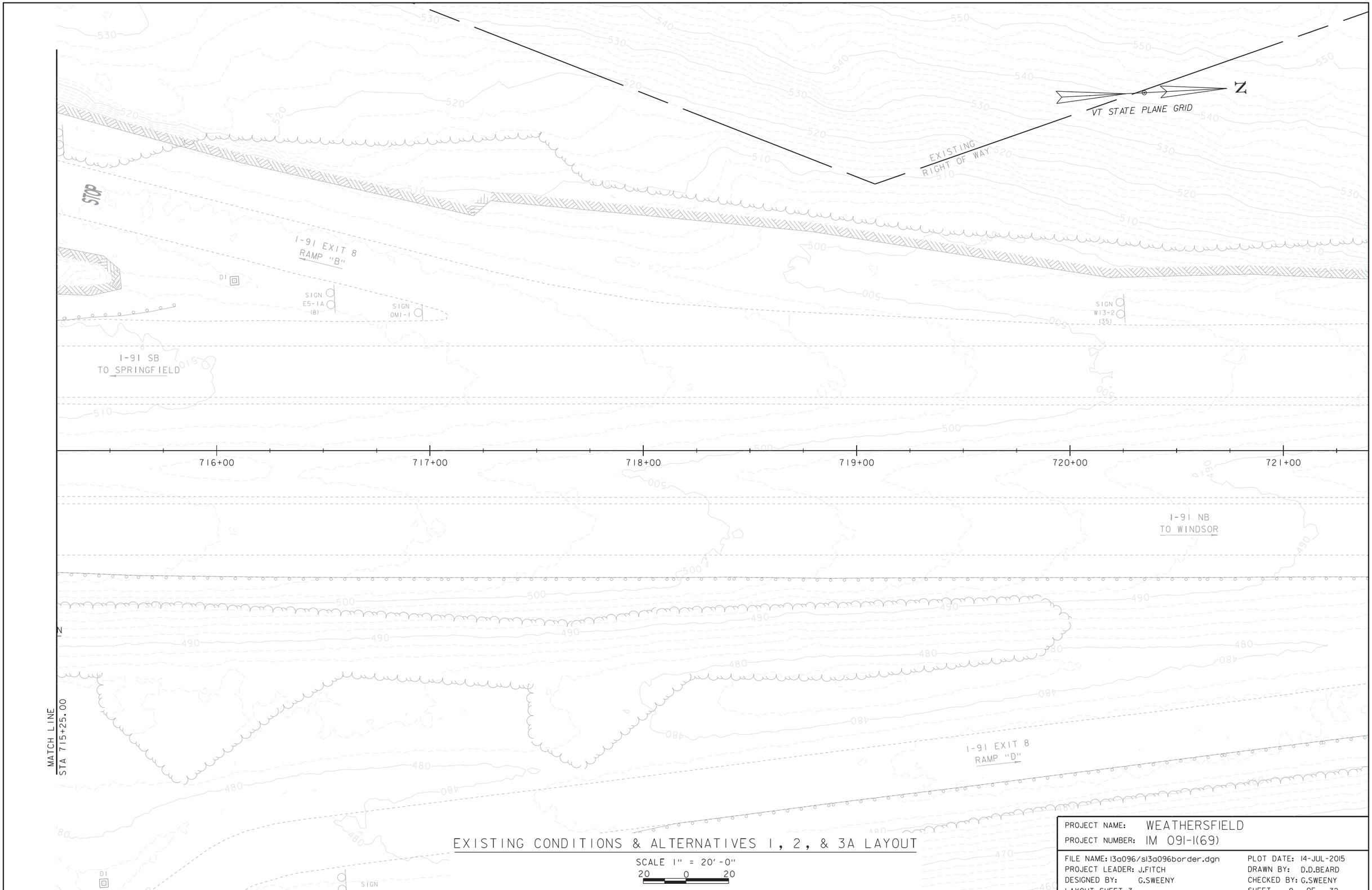

EXISTING CONDITIONS & ALTERNATIVES 1, 2, & 3A LAYOUT

SCALE 1" = 20'-0"
20 0 20

PROJECT NAME: WEATHERSFIELD	
PROJECT NUMBER: IM 091-1(69)	
FILE NAME: 13a096/s13a096border.dgn	PLOT DATE: 14-JUL-2015
PROJECT LEADER: J.FITCH	DRAWN BY: D.D.BEARD
DESIGNED BY: G.SWEENY	CHECKED BY: G.SWEENY
LAYOUT SHEET 3	SHEET 9 OF 32

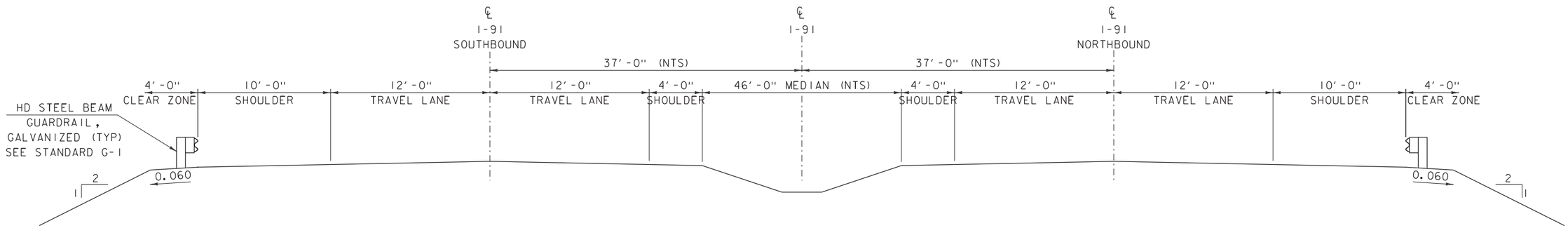

PROPOSED ROADWAY TYPICAL SECTION

SCALE 1/4" = 1'-0"

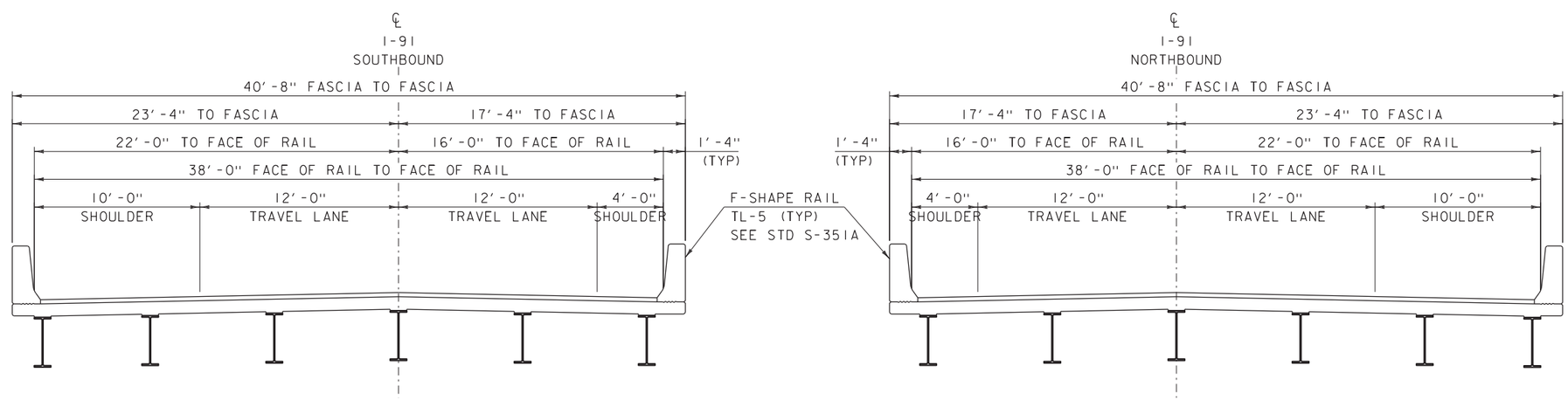

ALTERNATIVE 3B BRIDGE TYPICAL SECTION

SCALE 1/4" = 1'-0"

NOTE: SUPERSTRUCTURE NOT YET DESIGNED

EXISTING DIMENSIONS AND SIZES HAVE NOT BEEN VERIFIED IN THE FIELD

PROJECT NAME: WEATHERSFIELD	
PROJECT NUMBER: IM 091-1(69)	
FILE NAME: 13a096/s13a096typ.dgn	PLOT DATE: 14-JUL-2015
PROJECT LEADER: J.FITCH	DRAWN BY: D.D.BEARD
DESIGNED BY: G.SWEENY	CHECKED BY: G.SWEENY
ALTERNATIVE 3B TYPICAL SECTIONS	SHEET 10 OF 32

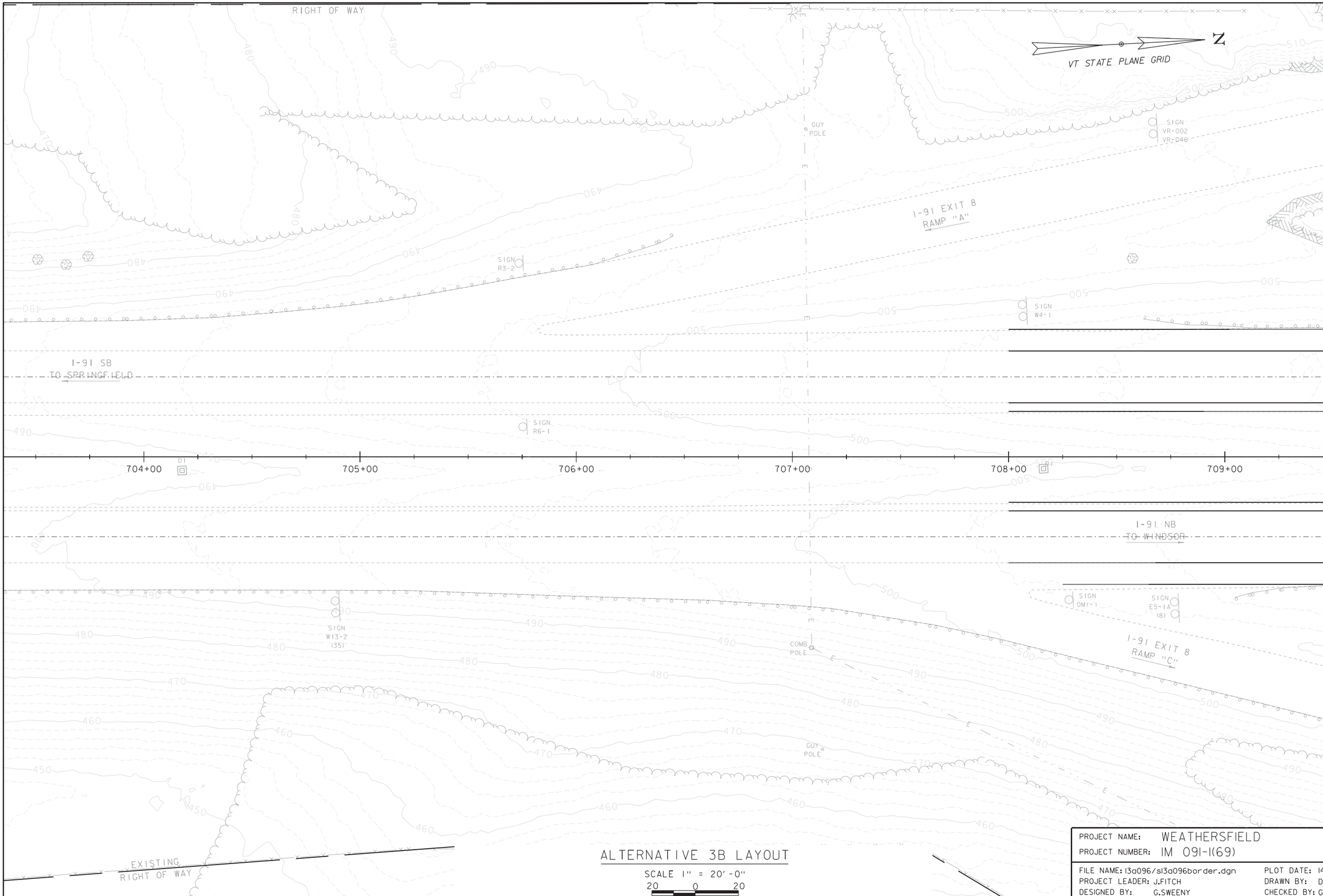

ALTERNATIVE 3B LAYOUT

SCALE 1" = 20'-0"

20 0 20

PROJECT NAME: WEATHERSFIELD	
PROJECT NUMBER: IM 091-1(69)	
FILE NAME: 13a096/sl3a096border.dgn	PLOT DATE: 14-JUL-2015
PROJECT LEADER: J.FITCH	DRAWN BY: D.D.BEARD
DESIGNED BY: G.SWEENY	CHECKED BY: G.SWEENY
ALTERNATIVE 3B LAYOUT SHEET 1	SHEET 11 OF 32

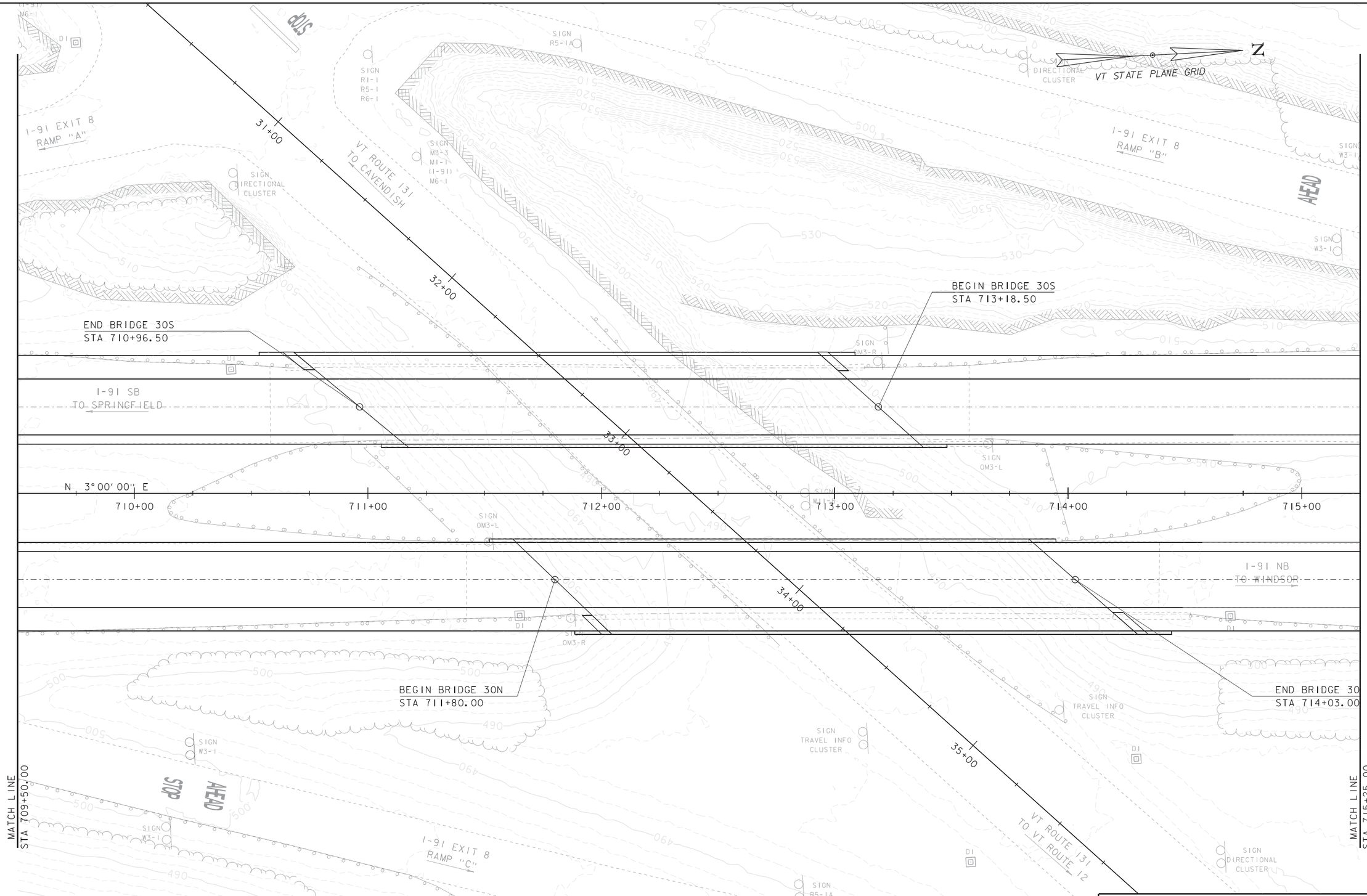

ALTERNATIVE 3B LAYOUT

SCALE 1" = 20'-0"

20 0 20

PROJECT NAME: WEATHERSFIELD	
PROJECT NUMBER: IM 091-1(69)	
FILE NAME: 13a096/sl3a096border.dgn	PLOT DATE: 14-JUL-2015
PROJECT LEADER: J.FITCH	DRAWN BY: D.D.BEARD
DESIGNED BY: G.SWEENY	CHECKED BY: G.SWEENY
ALTERNATIVE 3B LAYOUT SHEET 2	SHEET 12 OF 32

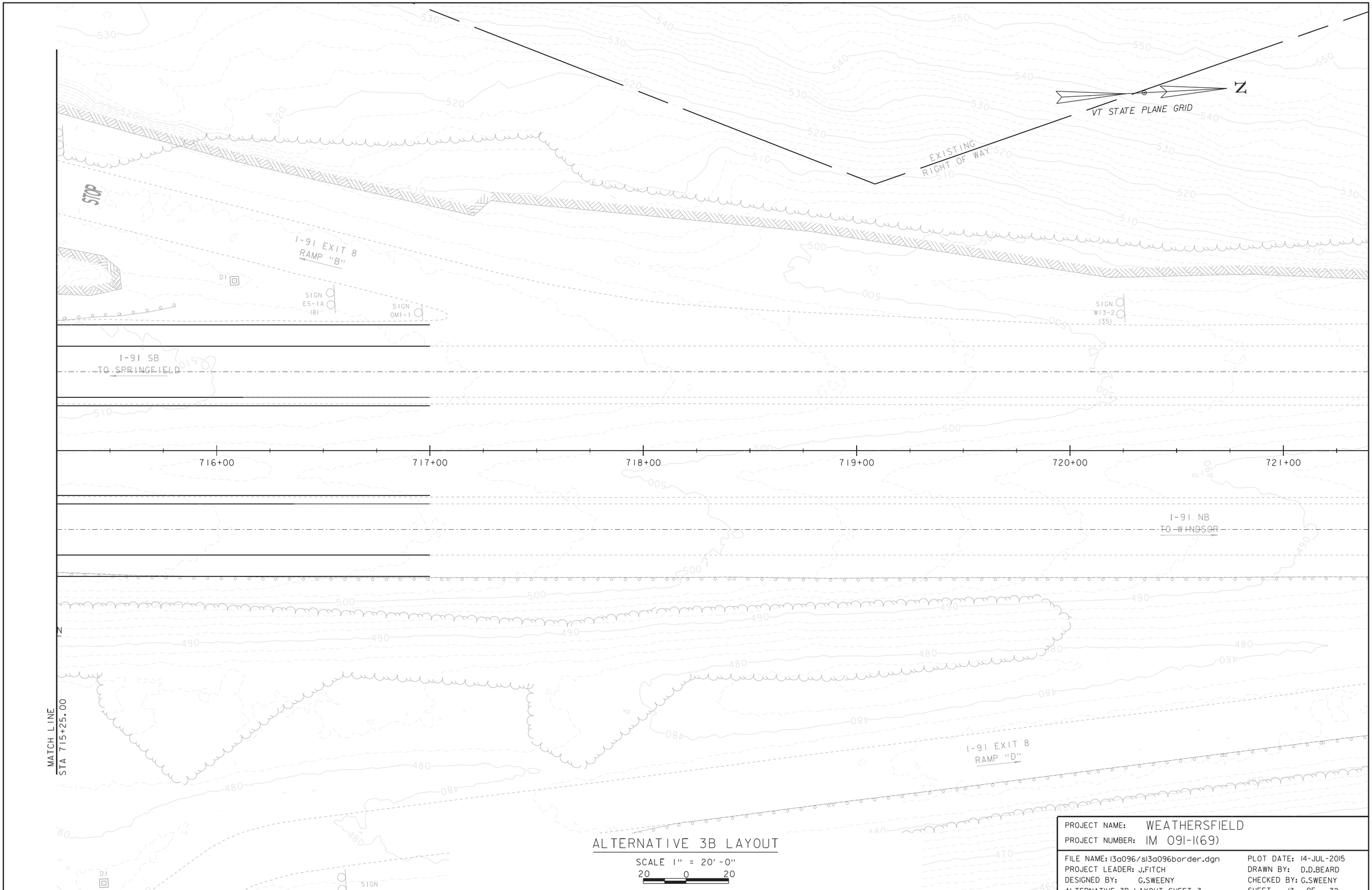

ALTERNATIVE 3B LAYOUT

SCALE 1" = 20'-0"

20 0 20

PROJECT NAME: WEATHERSFIELD	
PROJECT NUMBER: IM 091-1(69)	
FILE NAME: 13a096/s13a096border.dgn	PLOT DATE: 14-JUL-2015
PROJECT LEADER: J.FITCH	DRAWN BY: D.D.BEARD
DESIGNED BY: G.SWEENY	CHECKED BY: G.SWEENY
ALTERNATIVE 3B LAYOUT SHEET 3	SHEET 13 OF 32

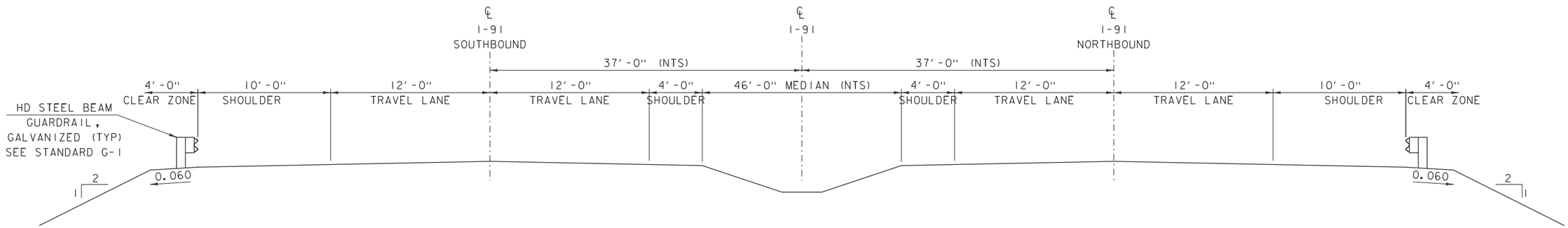

PROPOSED ROADWAY TYPICAL SECTION

SCALE 1/4" = 1'-0"

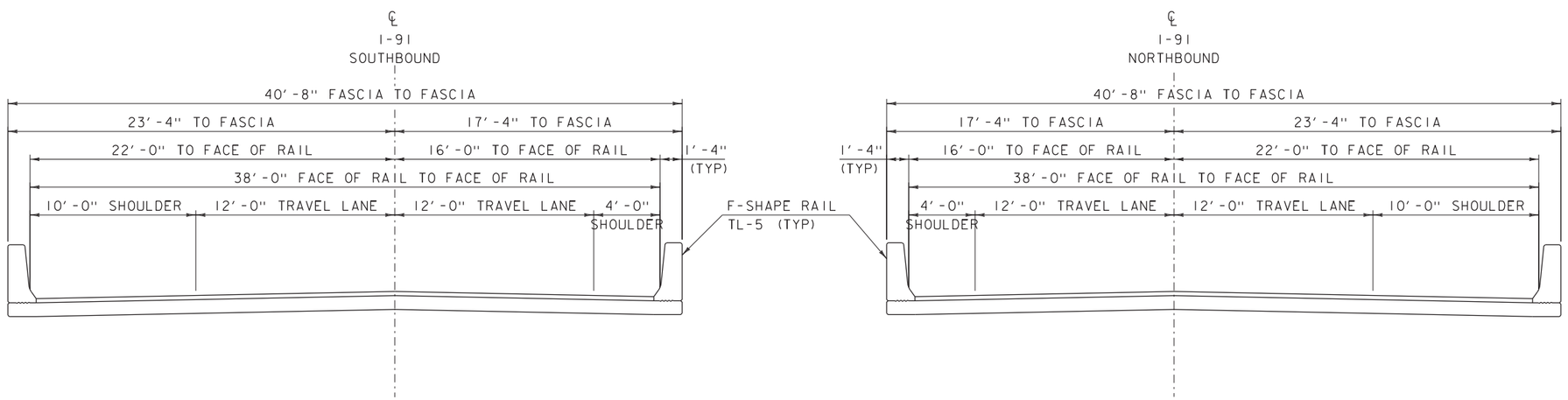

ALTERNATIVE 4 BRIDGE TYPICAL SECTION

SCALE 1/4" = 1'-0"
NOTE: SUPERSTRUCTURE NOT YET DESIGNED

EXISTING DIMENSIONS AND SIZES HAVE
NOT BEEN VERIFIED IN THE FIELD

PROJECT NAME: WEATHERSFIELD	
PROJECT NUMBER: IM 091-1(69)	
FILE NAME: 13a096/s13a096typ.dgn	PLOT DATE: 14-JUL-2015
PROJECT LEADER: J.FITCH	DRAWN BY: D.D.BEARD
DESIGNED BY: G.SWEENY	CHECKED BY: G.SWEENY
ALTERNATIVE 4 TYPICAL SECTIONS	SHEET 14 OF 32

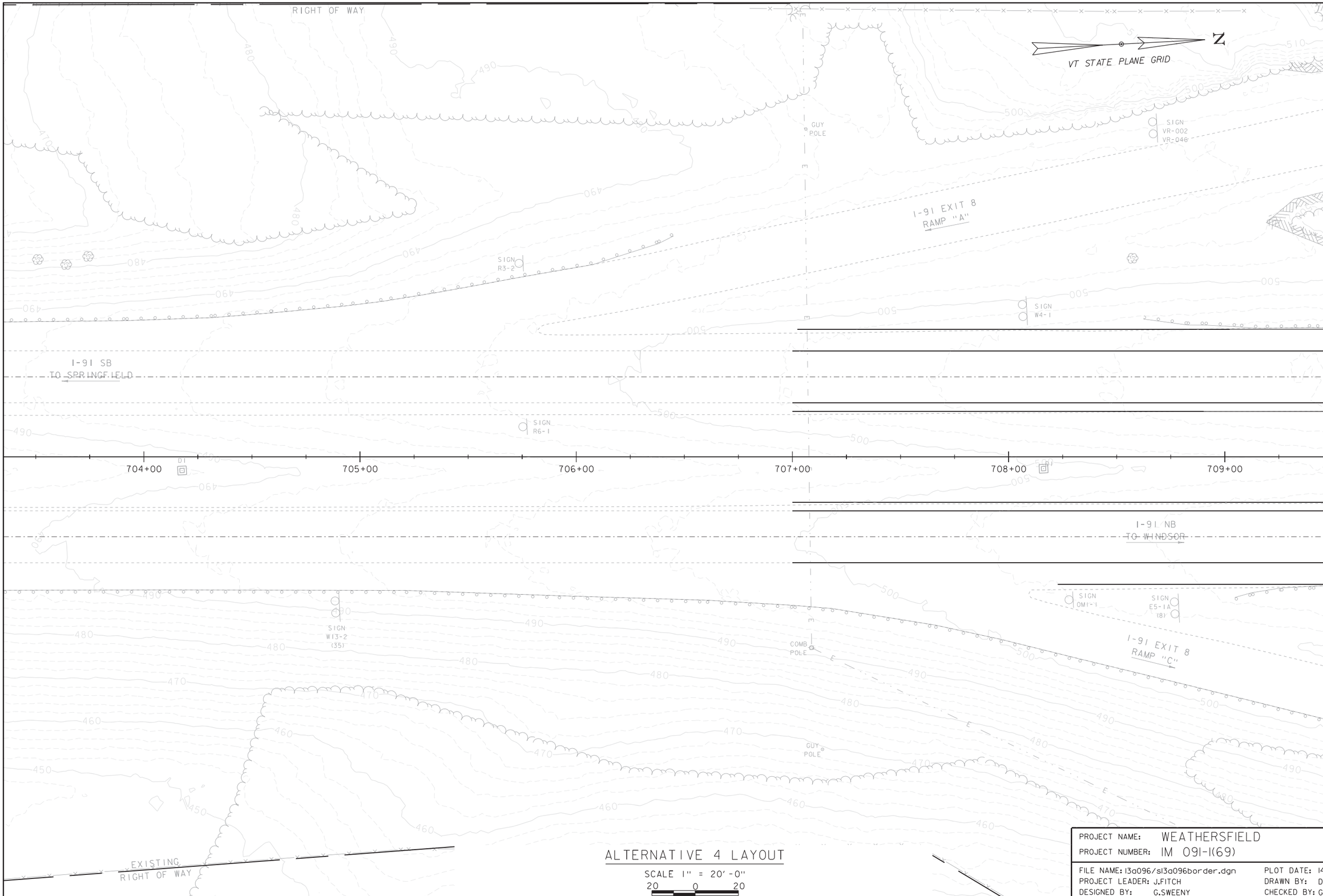

ALTERNATIVE 4 LAYOUT

SCALE 1" = 20'-0"

20 0 20

PROJECT NAME: WEATHERSFIELD	
PROJECT NUMBER: IM 091-1(69)	
FILE NAME: 13a096/sl3a096border.dgn	PLOT DATE: 14-JUL-2015
PROJECT LEADER: J.FITCH	DRAWN BY: D.D.BEARD
DESIGNED BY: G.SWEENY	CHECKED BY: G.SWEENY
ALTERNATIVE 4 LAYOUT SHEET 1	SHEET 15 OF 32

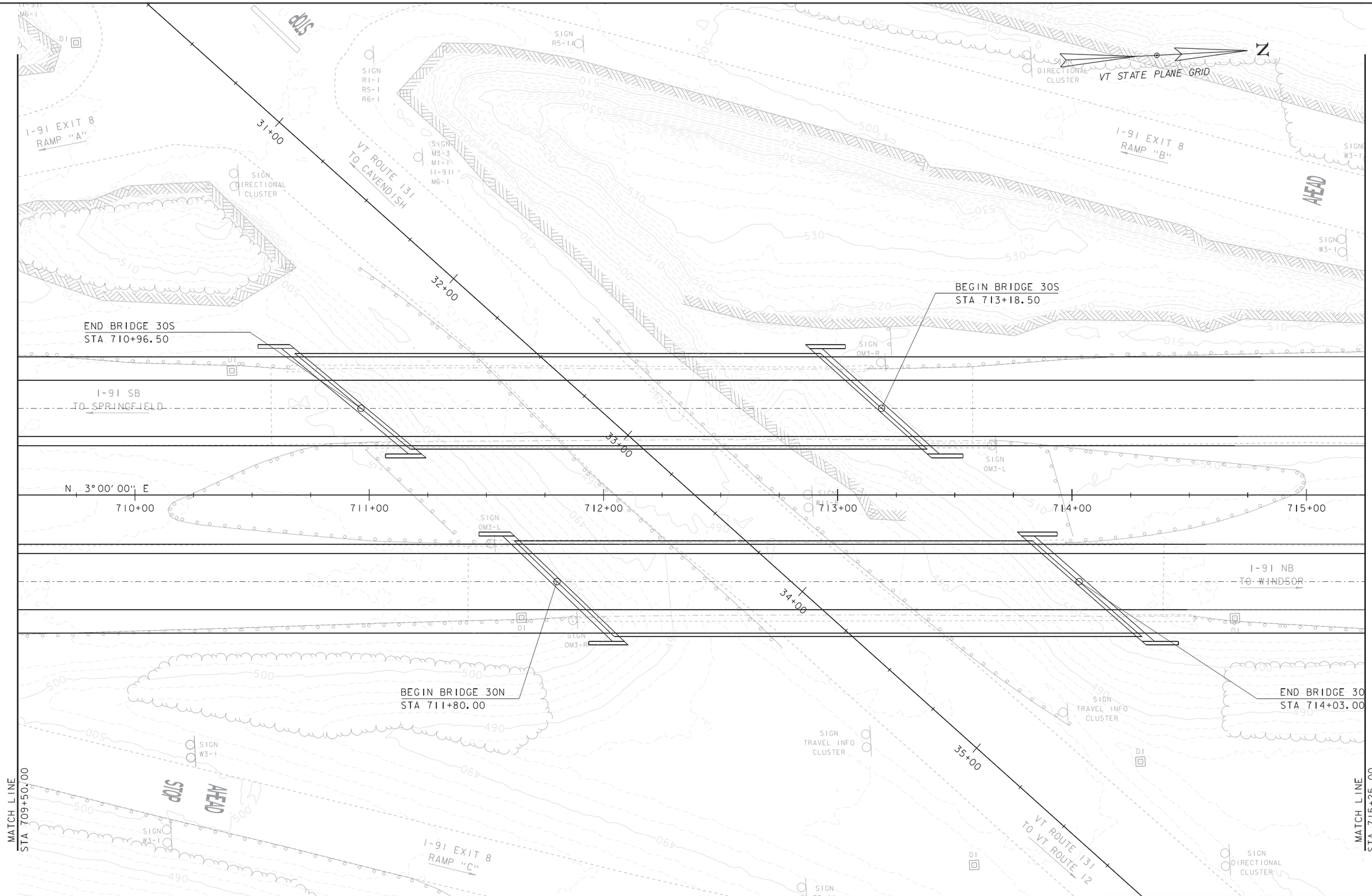

EXISTING BRIDGE INFORMATION
219' LONG 3-SPAN BRIDGE (BOTH)
CONTINUOUS ROLLED BEAM
BUILT 1965

ALTERNATIVE 4 LAYOUT

SCALE 1" = 20'-0"
20 0 20

PROJECT NAME: WEATHERSFIELD	
PROJECT NUMBER: IM 091-1(69)	
FILE NAME: 13a096/sl3a096border.dgn	PLOT DATE: 14-JUL-2015
PROJECT LEADER: J.FITCH	DRAWN BY: D.D.BEARD
DESIGNED BY: G.SWEENY	CHECKED BY: G.SWEENY
ALTERNATIVE 4 LAYOUT SHEET 2	SHEET 16 OF 32

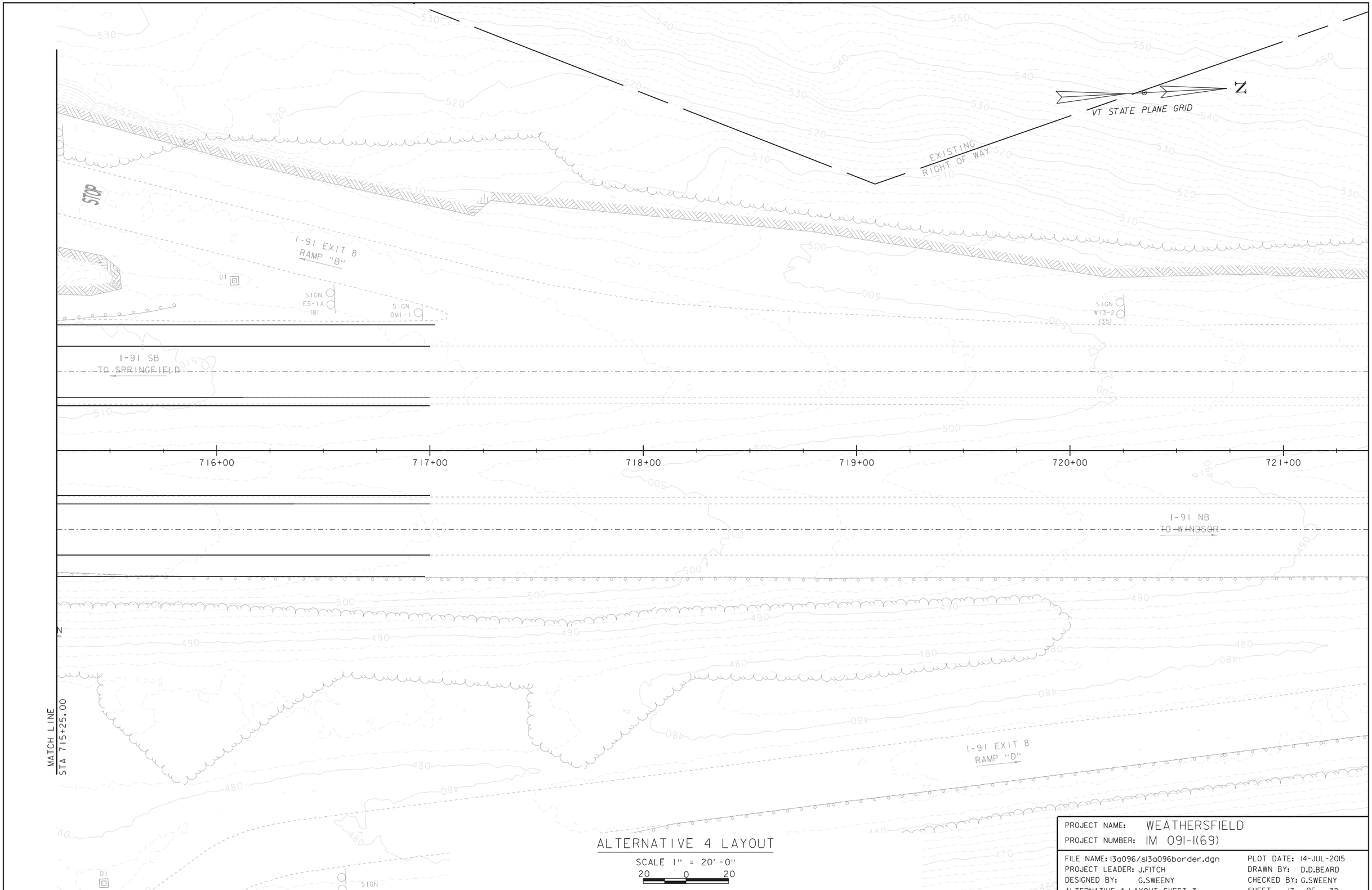

ALTERNATIVE 4 LAYOUT

SCALE 1" = 20'-0"

20 0 20

PROJECT NAME: WEATHERSFIELD	
PROJECT NUMBER: IM 091-1(69)	
FILE NAME: 13a096/sl3a096border.dgn	PLOT DATE: 14-JUL-2015
PROJECT LEADER: J.FITCH	DRAWN BY: D.D.BEARD
DESIGNED BY: G.SWEENY	CHECKED BY: G.SWEENY
ALTERNATIVE 4 LAYOUT SHEET 3	SHEET 17 OF 32

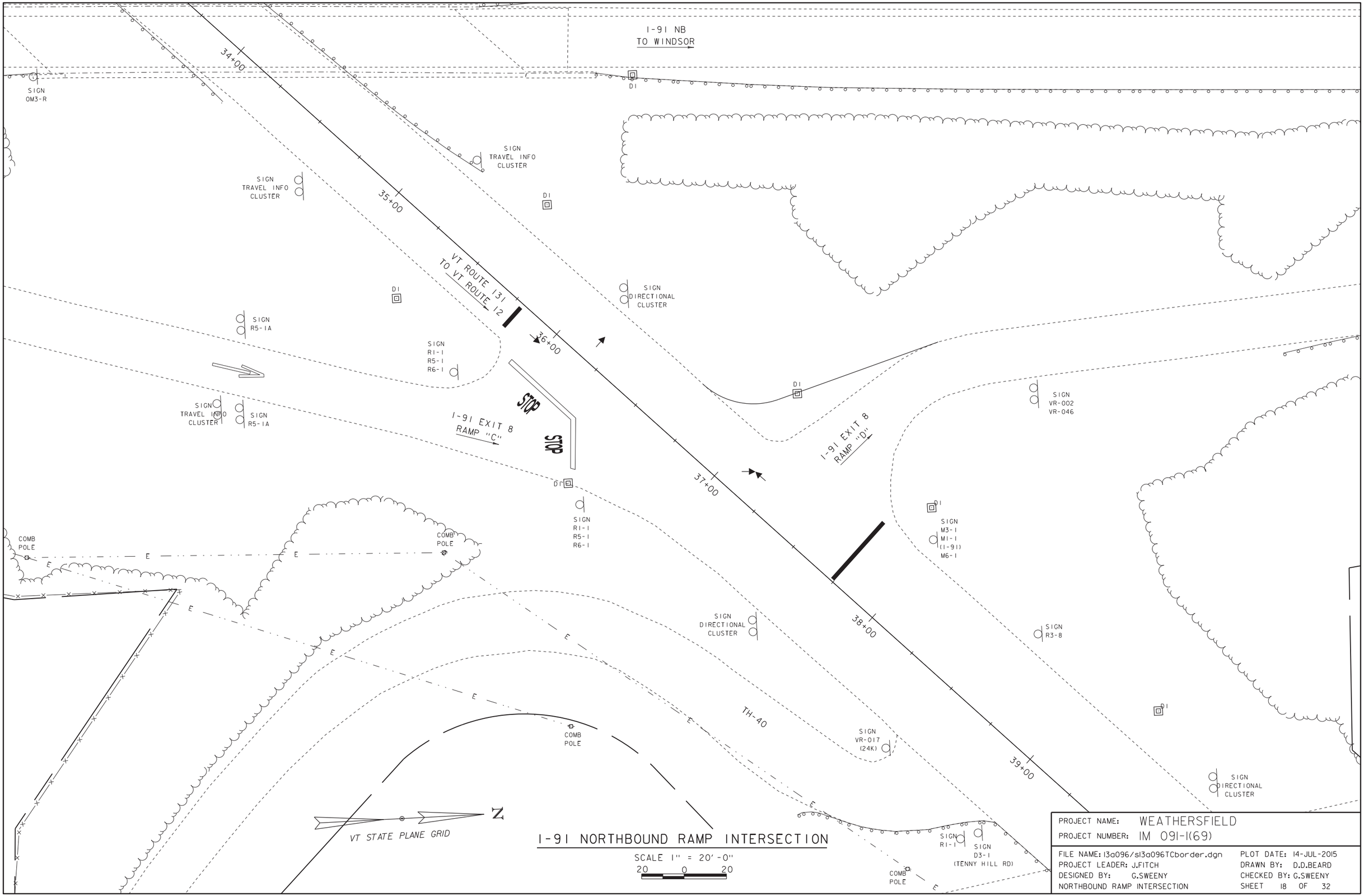

I-91 NORTHBOUND RAMP INTERSECTION

SCALE 1" = 20'-0"
20 0 20

PROJECT NAME: WEATHERSFIELD	
PROJECT NUMBER: IM 091-1(69)	
FILE NAME: 13a096/sl3a096TCborder.dgn	PLOT DATE: 14-JUL-2015
PROJECT LEADER: J.FITCH	DRAWN BY: D.D.BEARD
DESIGNED BY: G.SWEENY	CHECKED BY: G.SWEENY
NORTHBOUND RAMP INTERSECTION	SHEET 18 OF 32

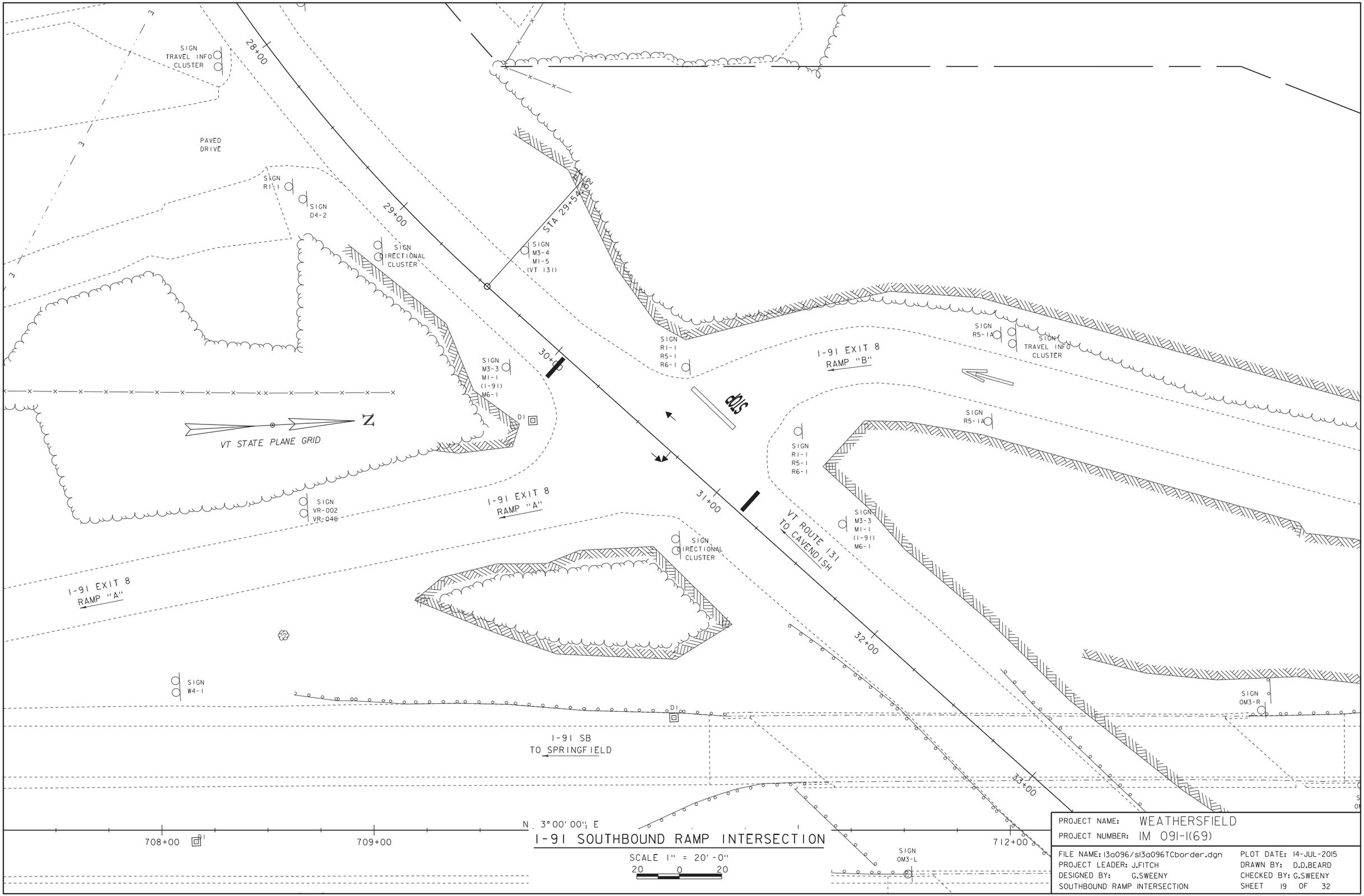

I-91 SOUTHBOUND RAMP INTERSECTION

SCALE 1" = 20'-0"

20 0 20

PROJECT NAME: WEATHERSFIELD	
PROJECT NUMBER: IM 091-1(69)	
FILE NAME: 13a096/s13a096TCborder.dgn	PLOT DATE: 14-JUL-2015
PROJECT LEADER: J.FITCH	DRAWN BY: D.D.BEARD
DESIGNED BY: G.SWEENY	CHECKED BY: G.SWEENY
SOUTHBOUND RAMP INTERSECTION	SHEET 19 OF 32

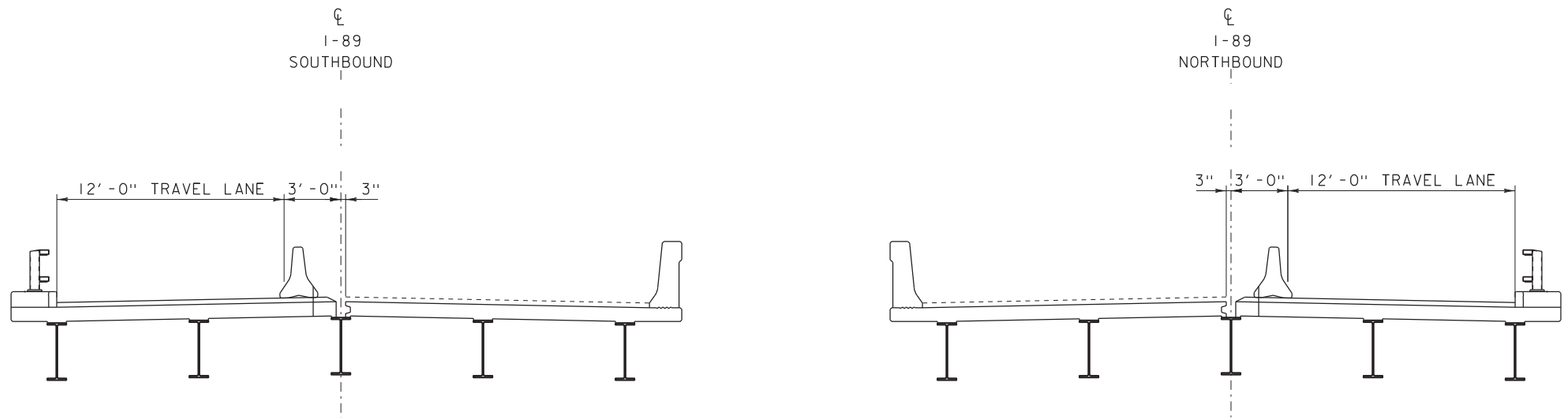

PHASE I TYPICAL SECTION

SCALE 1/4" = 1'-0"

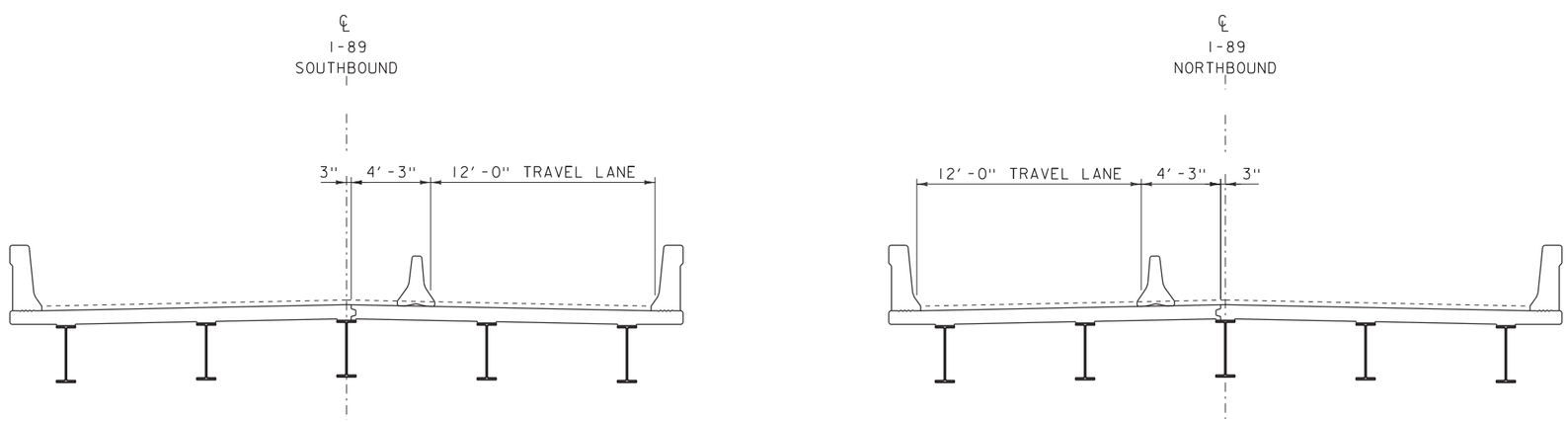

PHASE 2 TYPICAL SECTION

SCALE 1/4" = 1'-0"

PROJECT NAME: WEATHERSFIELD	
PROJECT NUMBER: IM 091-1(69)	
FILE NAME: 13a096/s13a096phasing.dgn	PLOT DATE: 14-JUL-2015
PROJECT LEADER: J.FITCH	DRAWN BY: D.D.BEARD
DESIGNED BY: L.J.STONE	CHECKED BY: L.J.STONE
PHASING TYPICAL SECTIONS	SHEET 20 OF 32

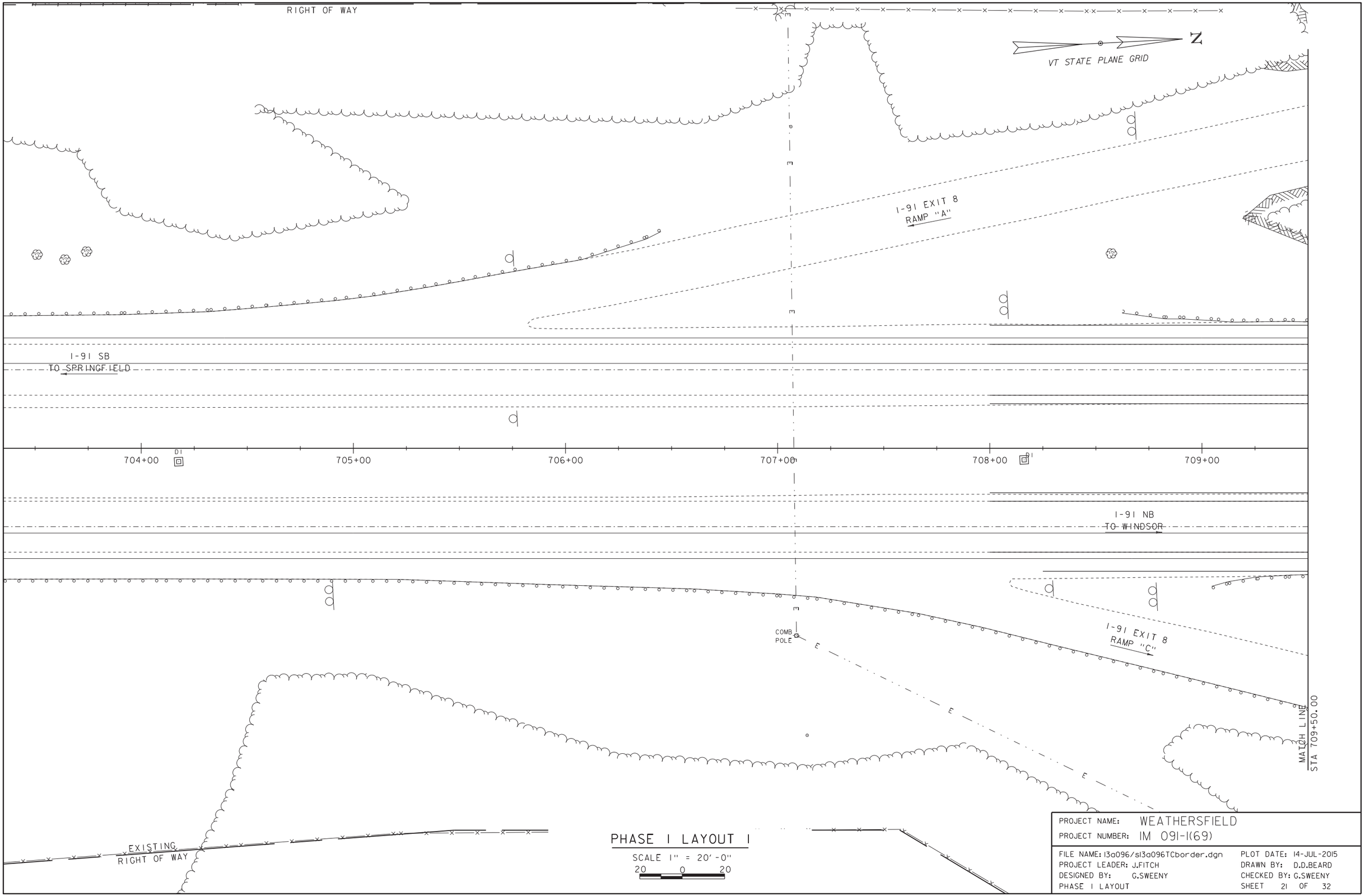

PHASE I LAYOUT I

SCALE 1" = 20'-0"

20 0 20

PROJECT NAME: WEATHERSFIELD	
PROJECT NUMBER: IM 091-1(69)	
FILE NAME: 13a096/sl3a096TCborder.dgn	PLOT DATE: 14-JUL-2015
PROJECT LEADER: J.FITCH	DRAWN BY: D.D.BEARD
DESIGNED BY: G.SWEENY	CHECKED BY: G.SWEENY
PHASE I LAYOUT	SHEET 21 OF 32

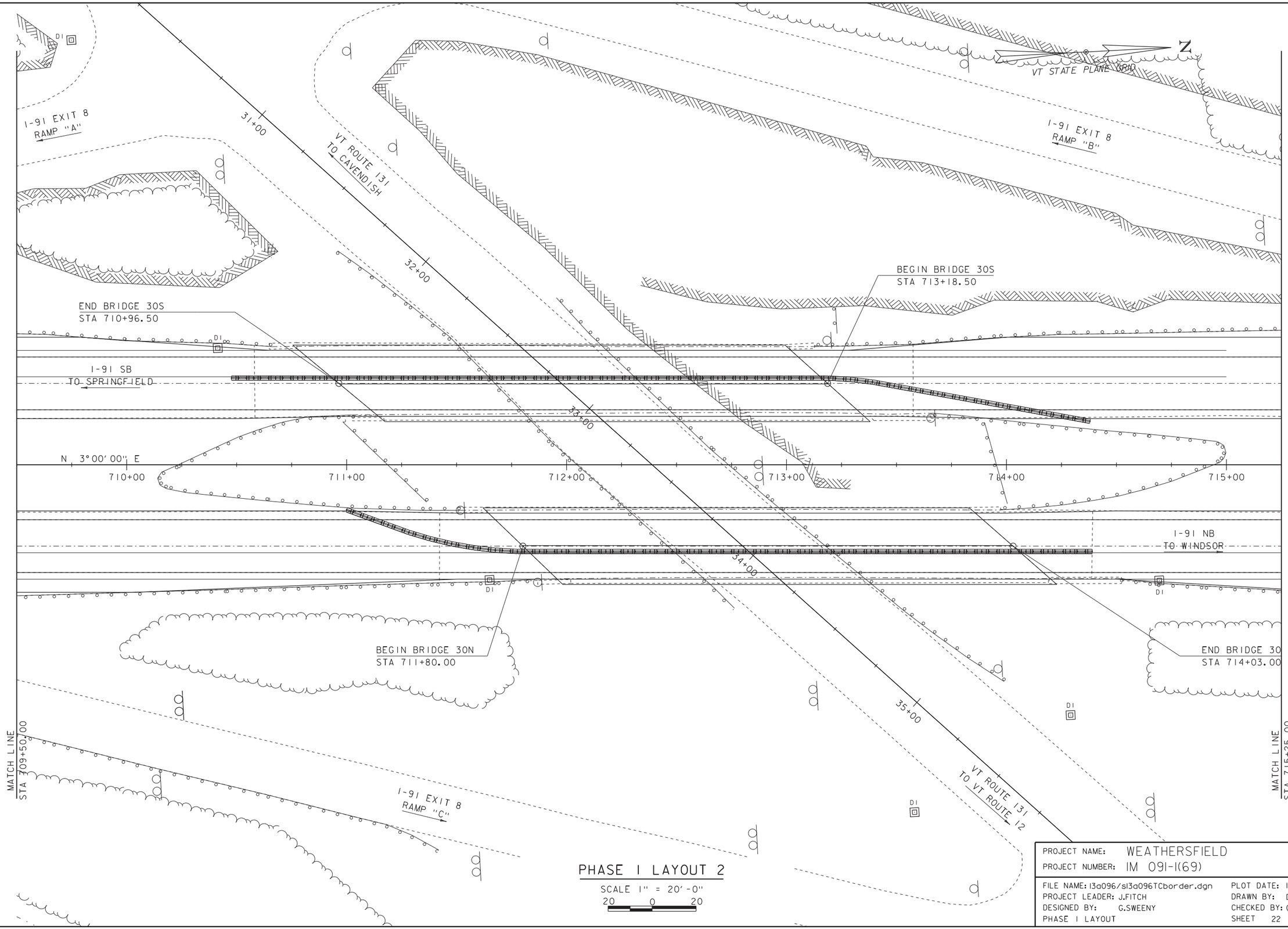

PHASE I LAYOUT 2

SCALE 1" = 20'-0"

20 0 20

PROJECT NAME: WEATHERSFIELD	
PROJECT NUMBER: IM 091-1(69)	
FILE NAME: 13a096/sl3a096TCborder.dgn	PLOT DATE: 14-JUL-2015
PROJECT LEADER: J.FITCH	DRAWN BY: D.D.BEARD
DESIGNED BY: G.SWEENY	CHECKED BY: G.SWEENY
PHASE I LAYOUT	SHEET 22 OF 32

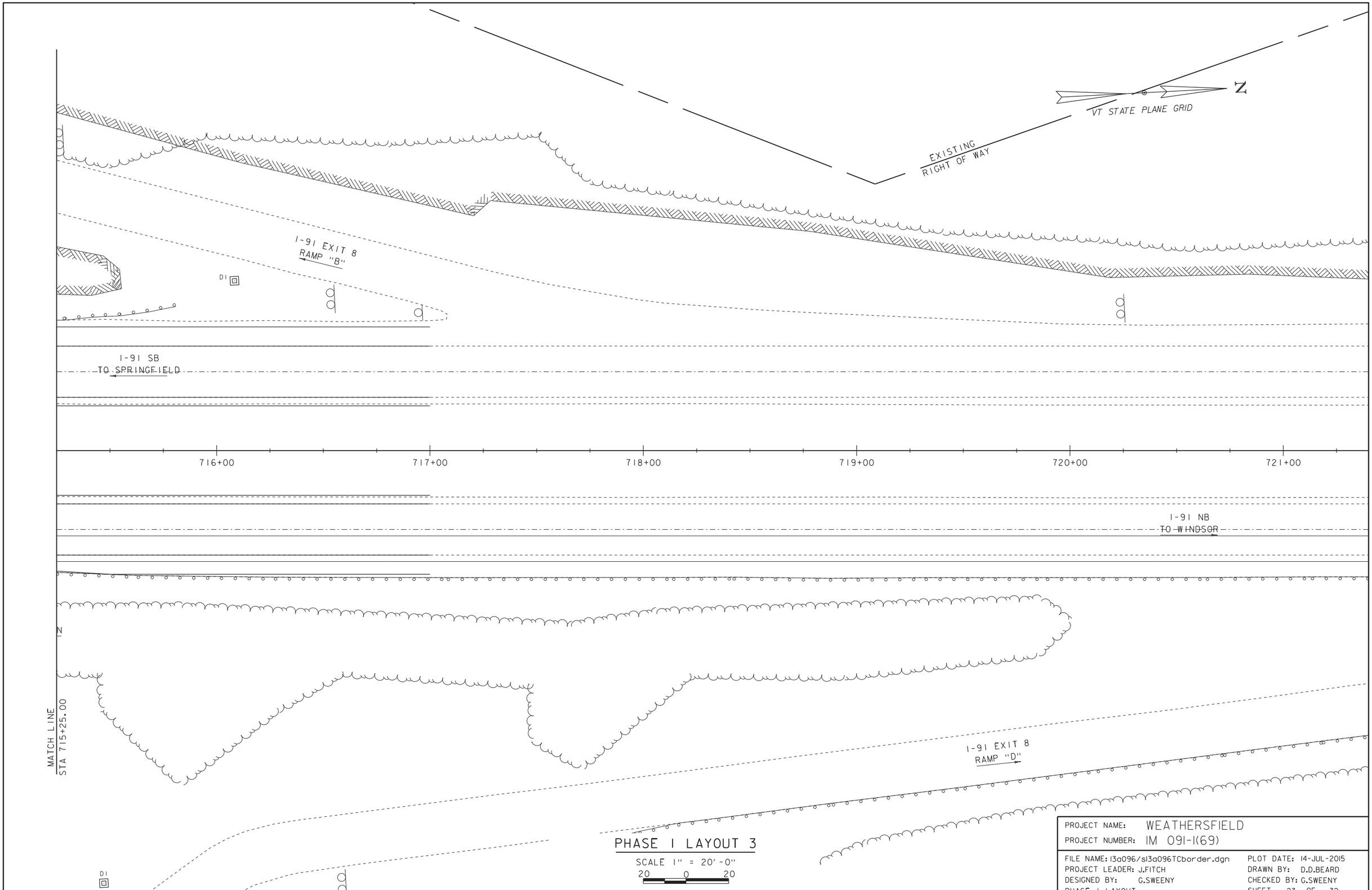

PHASE I LAYOUT 3

SCALE 1" = 20'-0"

20 0 20

PROJECT NAME: WEATHERSFIELD	
PROJECT NUMBER: IM 091-1(69)	
FILE NAME: 13a096/s13a096TCborder.dgn	PLOT DATE: 14-JUL-2015
PROJECT LEADER: J.FITCH	DRAWN BY: D.D.BEARD
DESIGNED BY: G.SWEENY	CHECKED BY: G.SWEENY
PHASE I LAYOUT	SHEET 23 OF 32

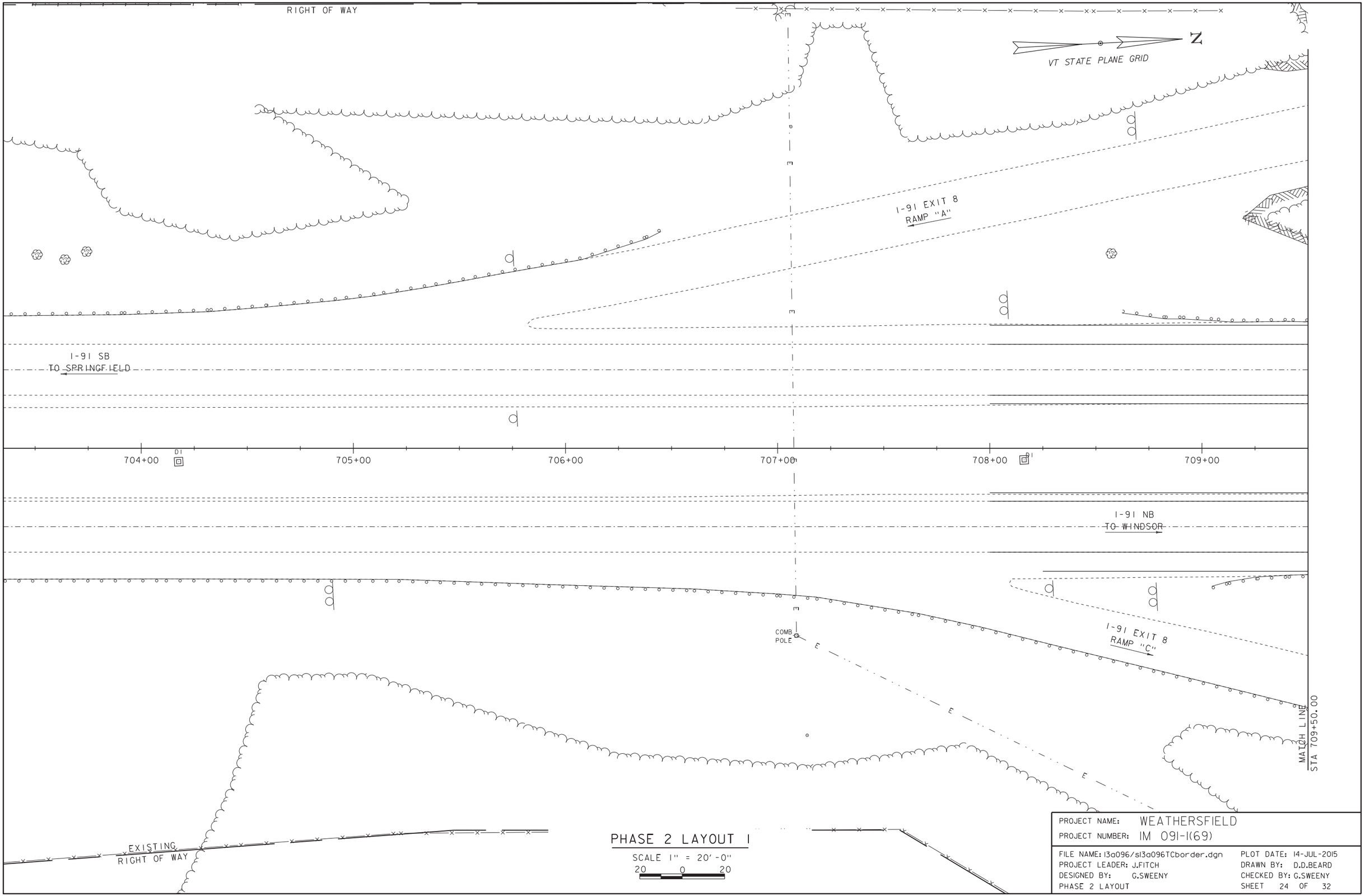

PHASE 2 LAYOUT 1

SCALE 1" = 20'-0"

20 0 20

PROJECT NAME: WEATHERSFIELD	
PROJECT NUMBER: IM 091-1(69)	
FILE NAME: 13a096/s13a096TCborder.dgn	PLOT DATE: 14-JUL-2015
PROJECT LEADER: J.FITCH	DRAWN BY: D.D.BEARD
DESIGNED BY: G.SWEENY	CHECKED BY: G.SWEENY
PHASE 2 LAYOUT	SHEET 24 OF 32

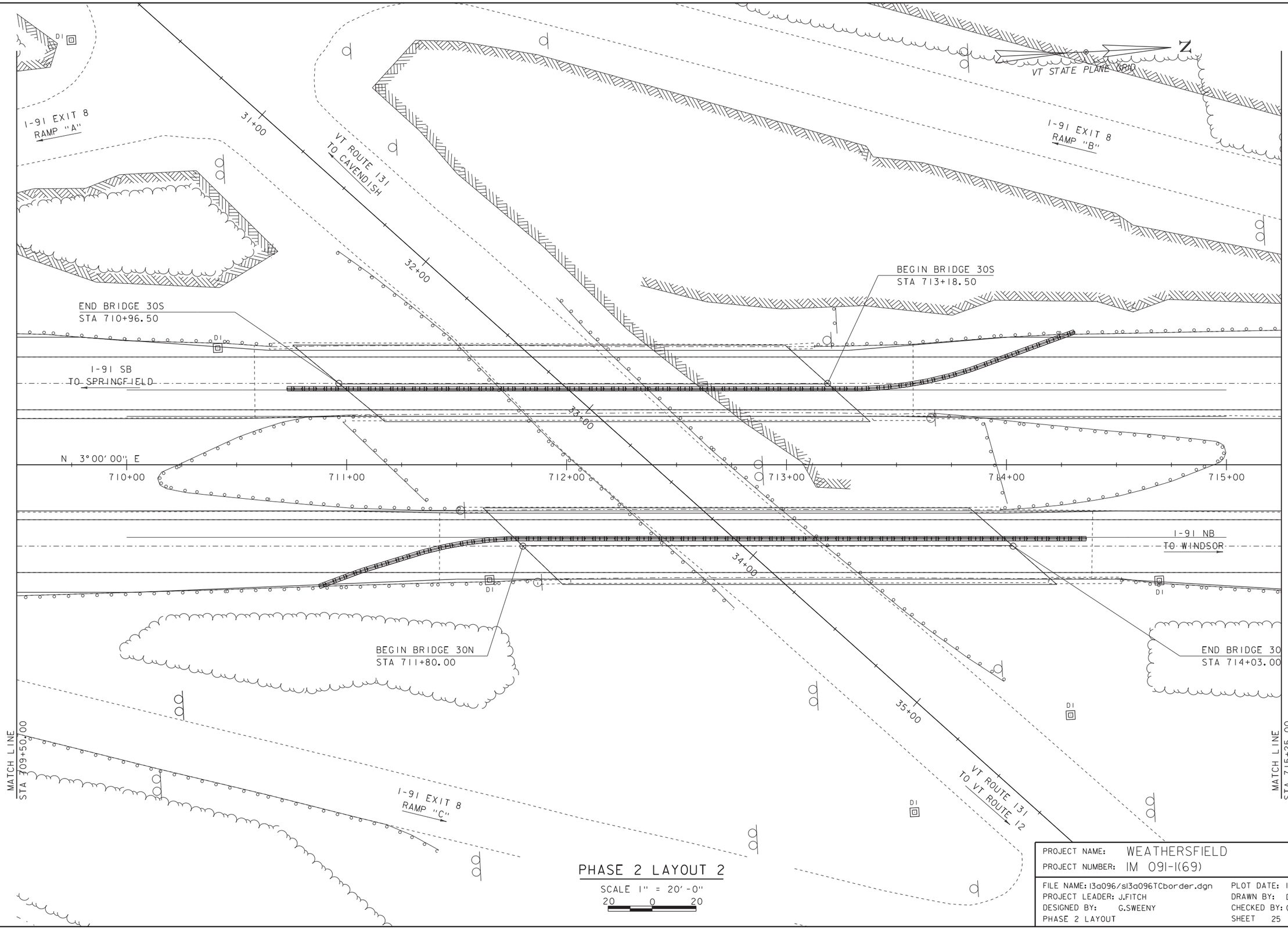

PHASE 2 LAYOUT 2

SCALE 1" = 20'-0"

20 0 20

PROJECT NAME: WEATHERSFIELD	
PROJECT NUMBER: IM 091-1(69)	
FILE NAME: 13a096/sl3a096TCborder.dgn	PLOT DATE: 14-JUL-2015
PROJECT LEADER: J.FITCH	DRAWN BY: D.D.BEARD
DESIGNED BY: G.SWEENY	CHECKED BY: G.SWEENY
PHASE 2 LAYOUT	SHEET 25 OF 32

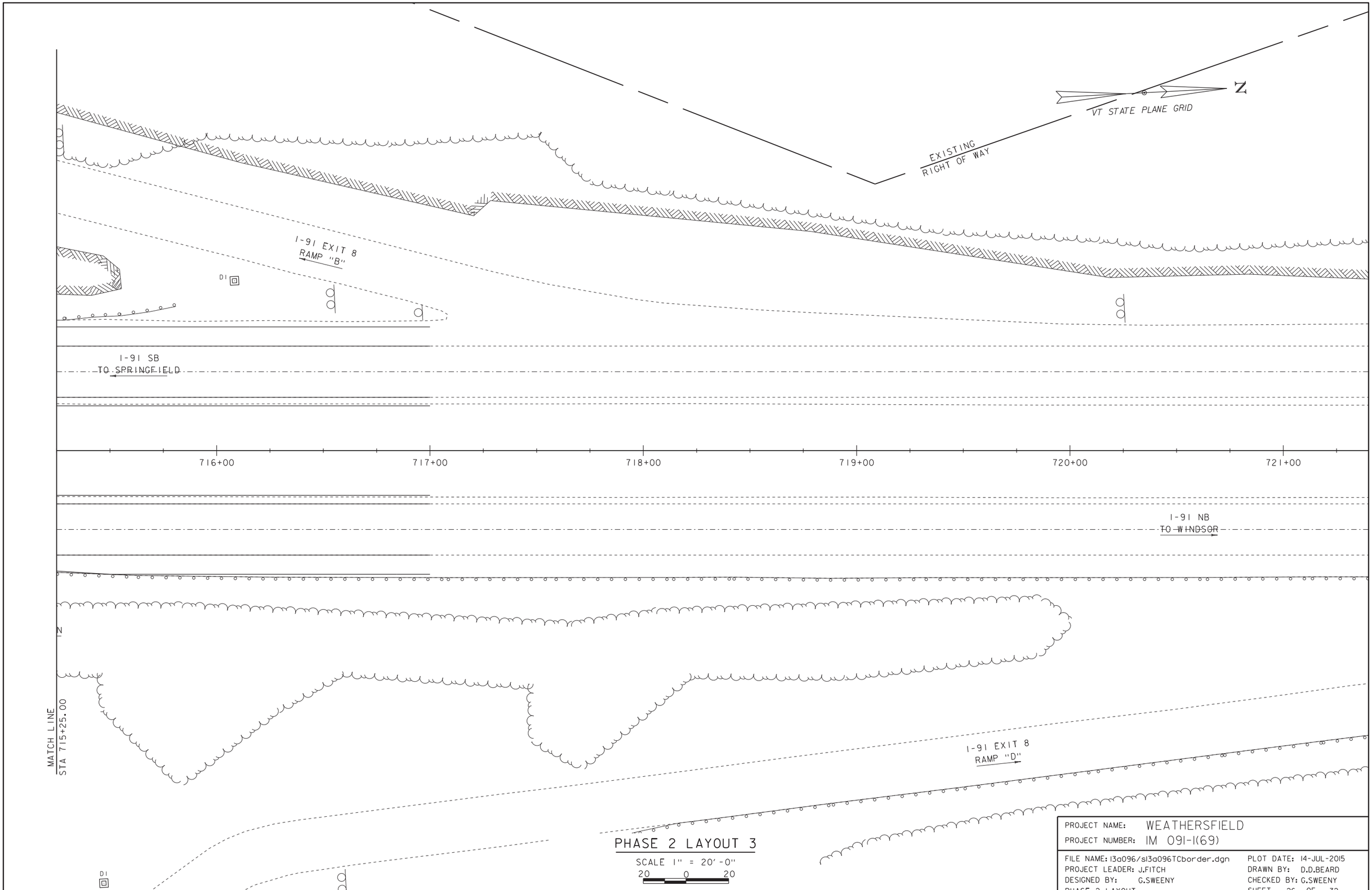

PHASE 2 LAYOUT 3

SCALE 1" = 20'-0"

20 0 20

PROJECT NAME: WEATHERSFIELD	
PROJECT NUMBER: IM 091-1(69)	
FILE NAME: 13a096/s13a096TCborder.dgn	PLOT DATE: 14-JUL-2015
PROJECT LEADER: J.FITCH	DRAWN BY: D.D.BEARD
DESIGNED BY: G.SWEENY	CHECKED BY: G.SWEENY
PHASE 2 LAYOUT	SHEET 26 OF 32

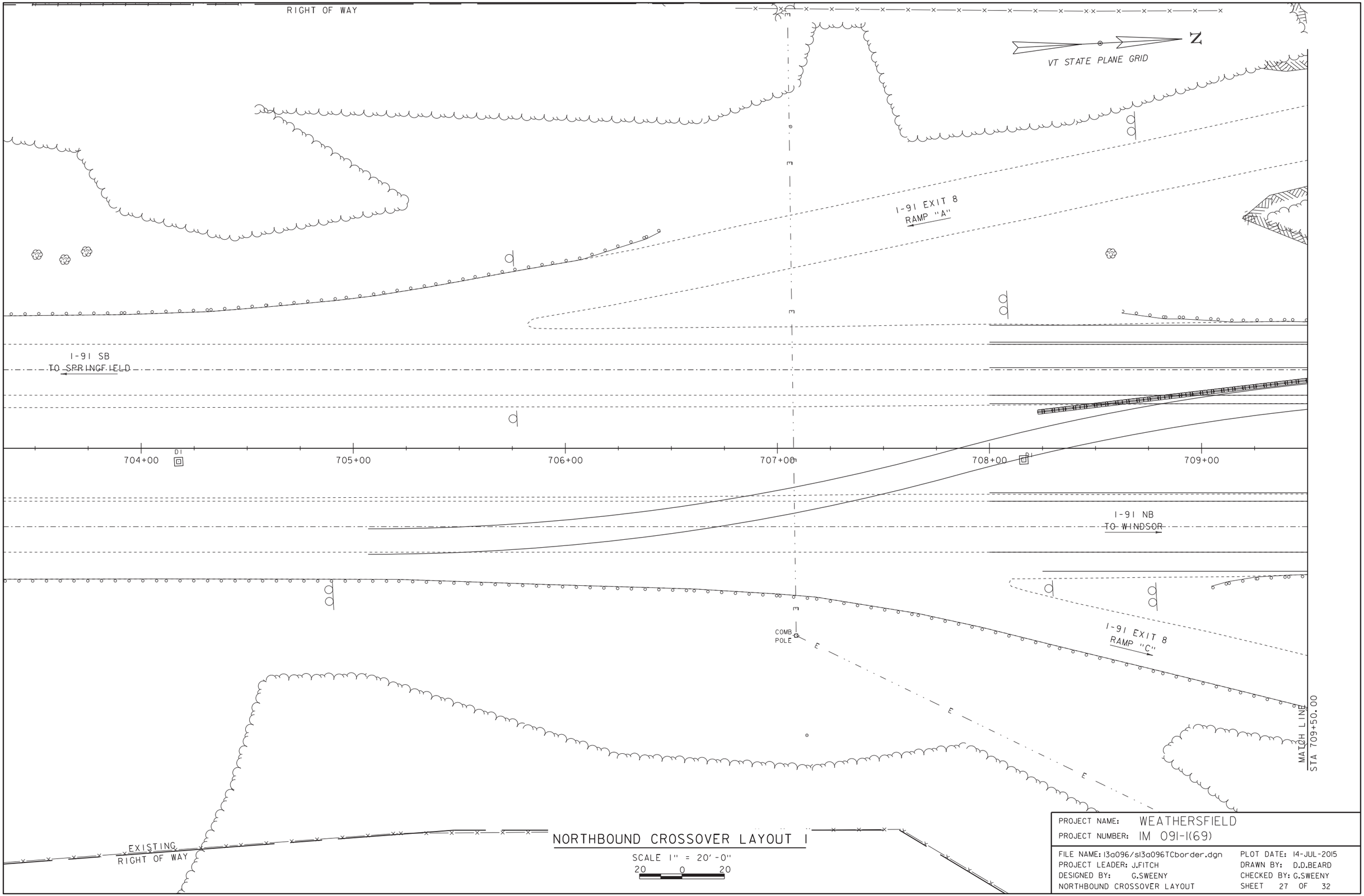

NORTHBOUND CROSSOVER LAYOUT 1

SCALE 1" = 20'-0"

20 0 20

PROJECT NAME: WEATHERSFIELD	
PROJECT NUMBER: IM 091-1(69)	
FILE NAME: 13a096/sl3a096TCborder.dgn	PLOT DATE: 14-JUL-2015
PROJECT LEADER: J.FITCH	DRAWN BY: D.D.BEARD
DESIGNED BY: G.SWEENY	CHECKED BY: G.SWEENY
NORTHBOUND CROSSOVER LAYOUT	SHEET 27 OF 32

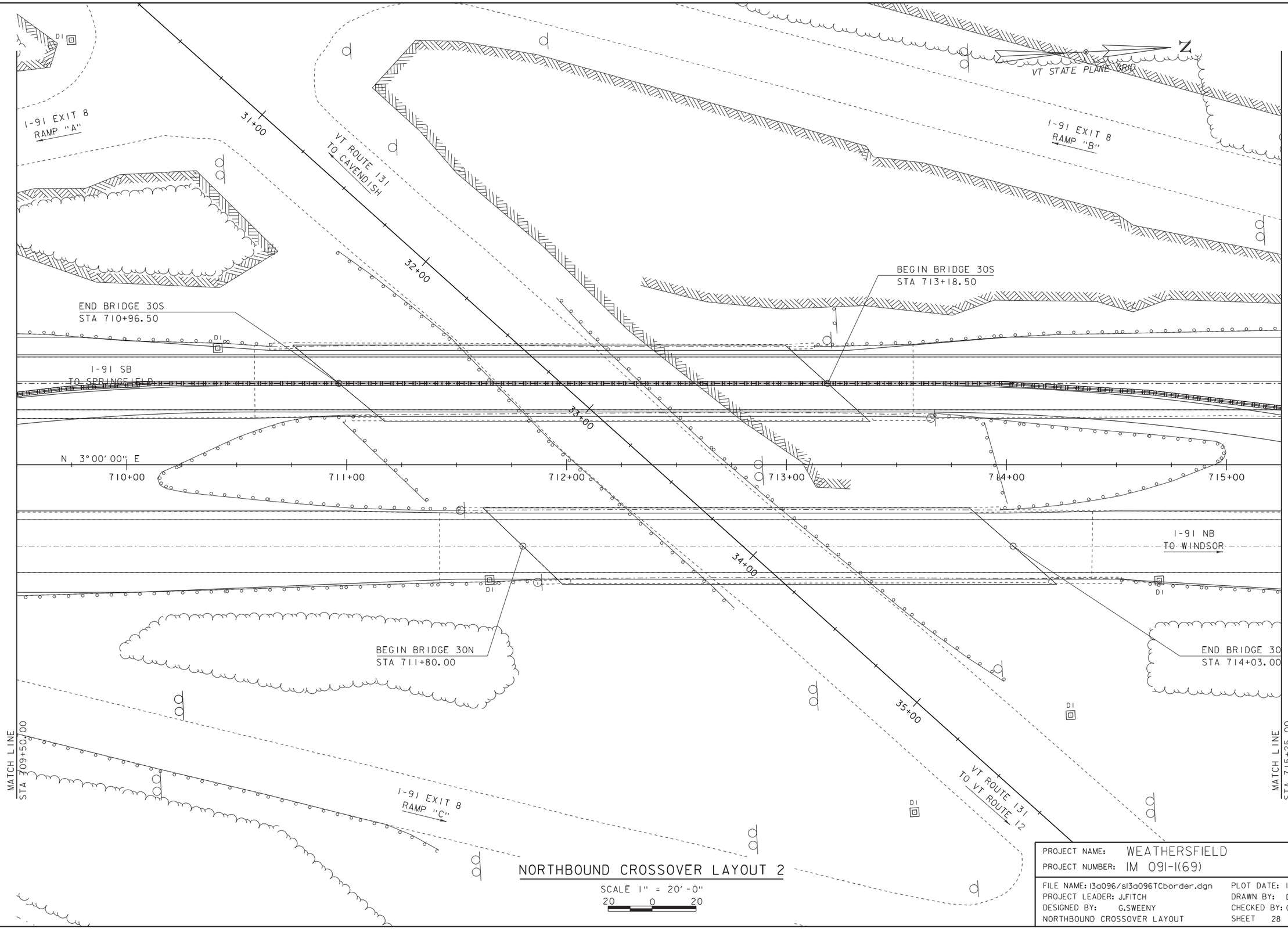

NORTHBOUND CROSSOVER LAYOUT 2

SCALE 1" = 20'-0"

20 0 20

PROJECT NAME: WEATHERSFIELD	
PROJECT NUMBER: IM 091-1(69)	
FILE NAME: 13a096/sl3a096TCborder.dgn	PLOT DATE: 14-JUL-2015
PROJECT LEADER: J.FITCH	DRAWN BY: D.D.BEARD
DESIGNED BY: G.SWEENY	CHECKED BY: G.SWEENY
NORTHBOUND CROSSOVER LAYOUT	SHEET 28 OF 32

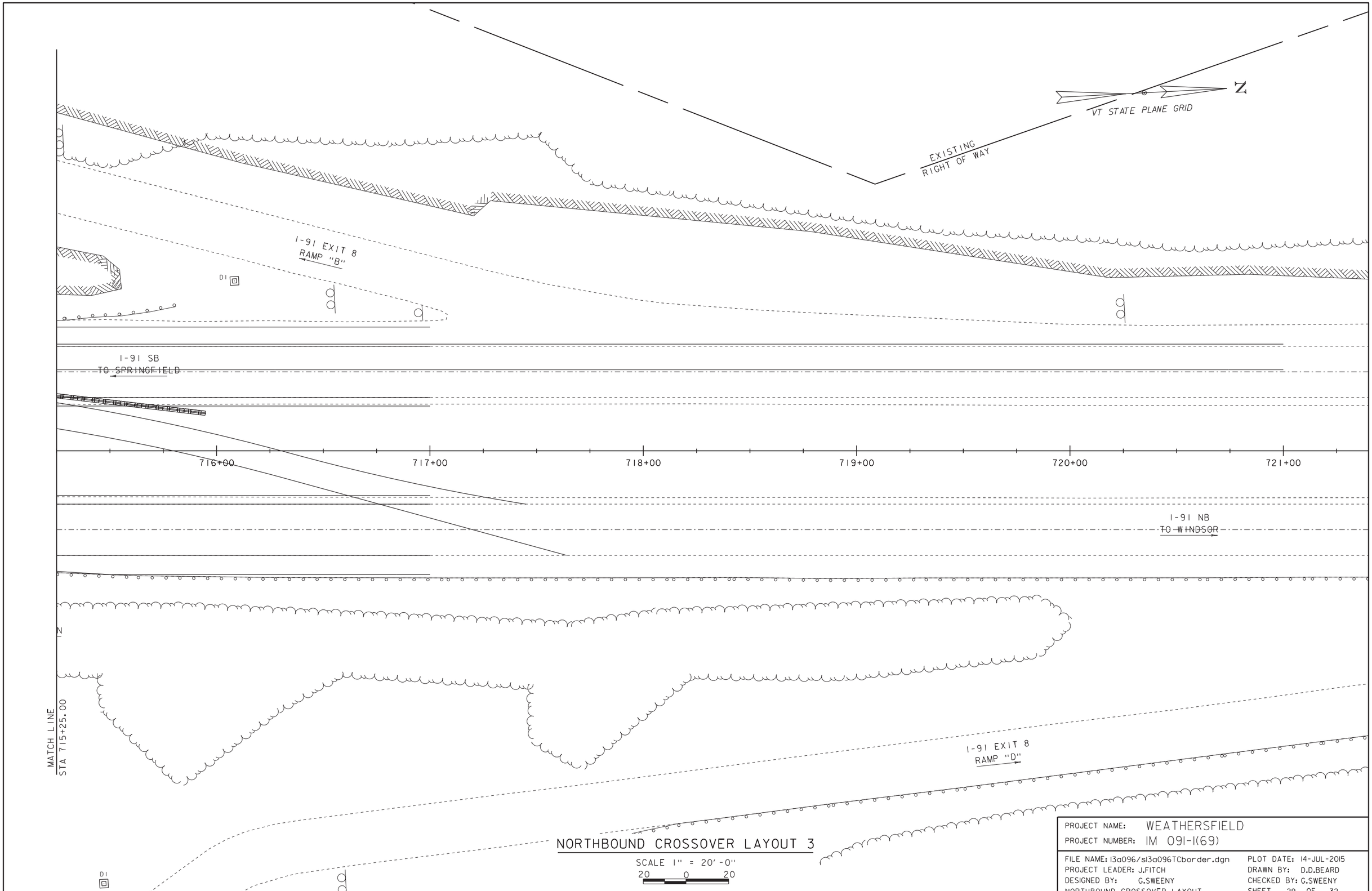

NORTHBOUND CROSSOVER LAYOUT 3

SCALE 1" = 20'-0"
20 0 20

PROJECT NAME: WEATHERSFIELD	
PROJECT NUMBER: IM 091-1(69)	
FILE NAME: 13a096/sl3a096TCborder.dgn	PLOT DATE: 14-JUL-2015
PROJECT LEADER: J.FITCH	DRAWN BY: D.D.BEARD
DESIGNED BY: G.SWEENY	CHECKED BY: G.SWEENY
NORTHBOUND CROSSOVER LAYOUT	SHEET 29 OF 32

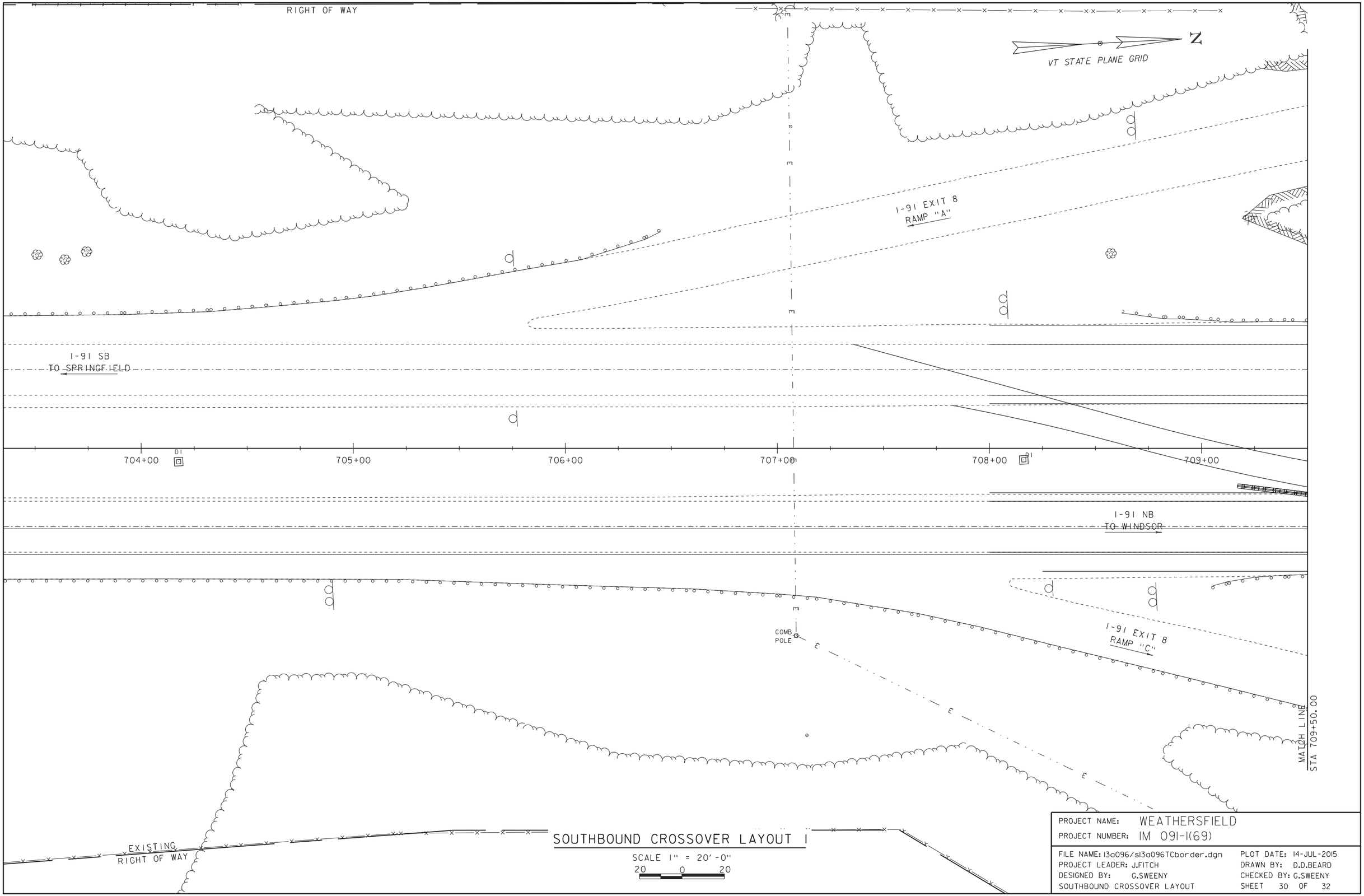

SOUTHBOUND CROSSOVER LAYOUT I

SCALE 1" = 20'-0"

20 0 20

PROJECT NAME: WEATHERSFIELD	
PROJECT NUMBER: IM 091-1(69)	
FILE NAME: I3a096/sI3a096TCborder.dgn	PLOT DATE: 14-JUL-2015
PROJECT LEADER: J.FITCH	DRAWN BY: D.D.BEARD
DESIGNED BY: G.SWEENY	CHECKED BY: G.SWEENY
SOUTHBOUND CROSSOVER LAYOUT	SHEET 30 OF 32

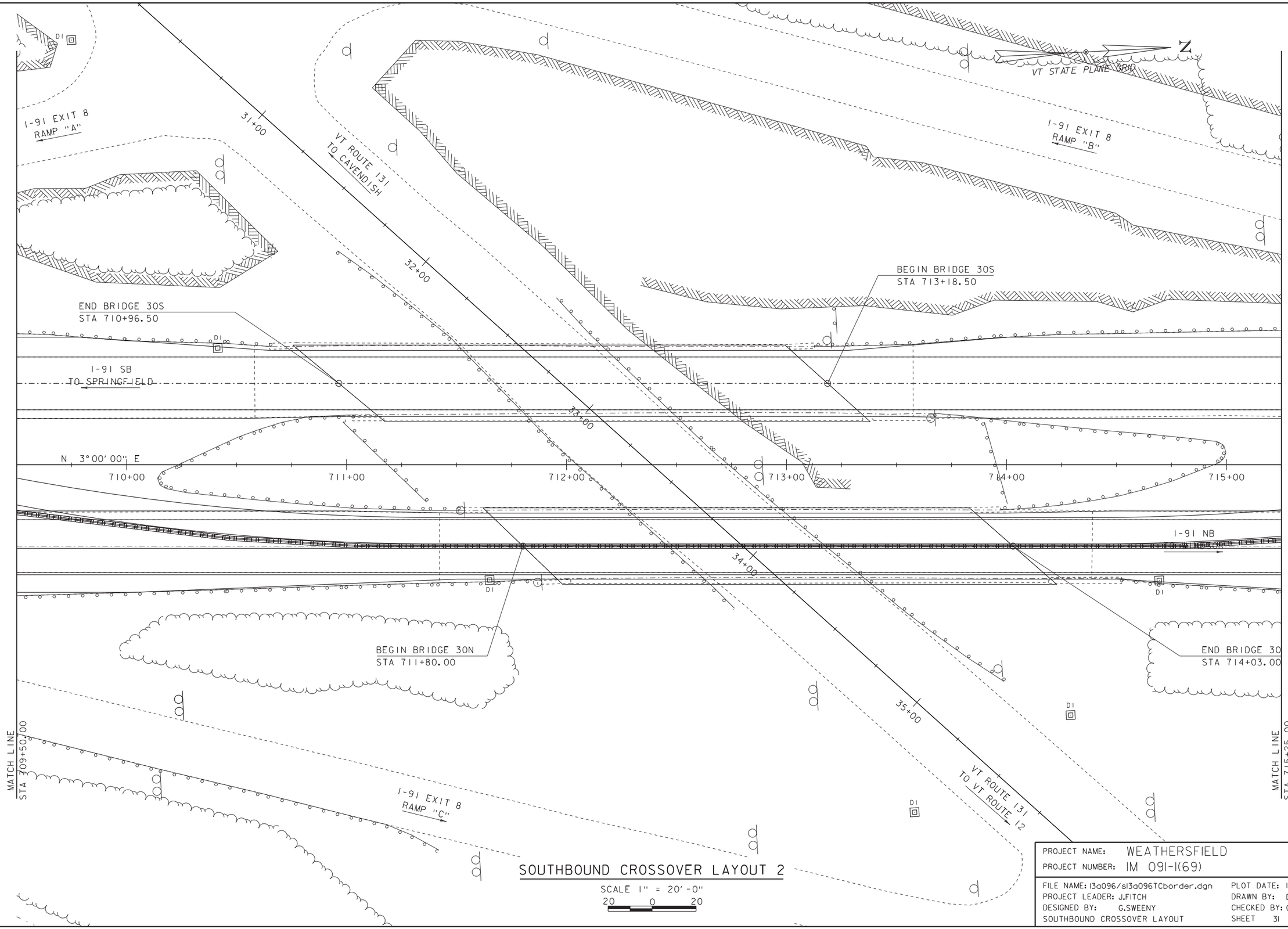

SOUTHBOUND CROSSOVER LAYOUT 2

SCALE 1" = 20'-0"

20 0 20

PROJECT NAME: WEATHERSFIELD	
PROJECT NUMBER: IM 091-1(69)	
FILE NAME: 13a096/sl3a096TCborder.dgn	PLOT DATE: 14-JUL-2015
PROJECT LEADER: J.FITCH	DRAWN BY: D.D.BEARD
DESIGNED BY: G.SWEENY	CHECKED BY: G.SWEENY
SOUTHBOUND CROSSOVER LAYOUT	SHEET 31 OF 32

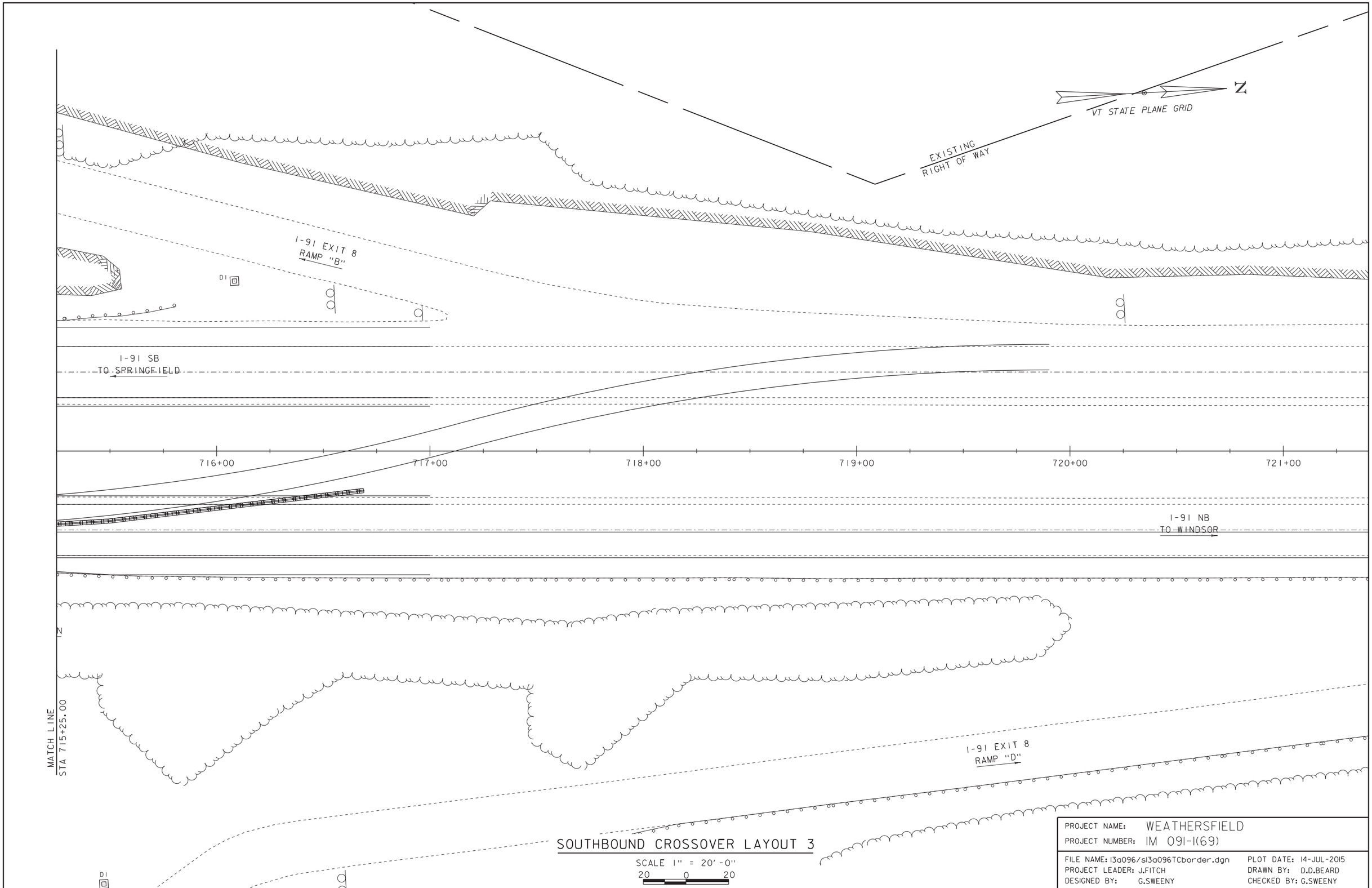

SOUTHBOUND CROSSOVER LAYOUT 3

SCALE 1" = 20'-0"

20 0 20

PROJECT NAME: WEATHERSFIELD	
PROJECT NUMBER: IM 091-1(69)	
FILE NAME: 13a096/sl3a096TCborder.dgn	PLOT DATE: 14-JUL-2015
PROJECT LEADER: J.FITCH	DRAWN BY: D.D.BEARD
DESIGNED BY: G.SWEENY	CHECKED BY: G.SWEENY
SOUTHBOUND CROSSOVER LAYOUT	SHEET 32 OF 32