STATE OF VERMONT
AGENCY OF TRANSPORTATION

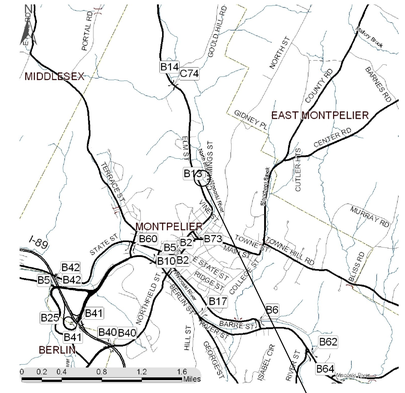

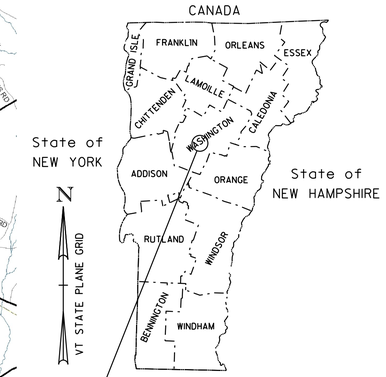

PROPOSED IMPROVEMENT
BRIDGE PROJECT

TOWN OF MONTPELIER
COUNTY OF WASHINGTON

ROUTE NO : TOWN HIGHWAY 130 (CUMMINGS STREET) , CLASS 3 TOWN HIGHWAY. BRIDGE NO : 13

PROJECT LOCATION: APPROXIMATELY 0.045 MILES EAST OF THE JUNCTION WITH CLASS 1 TH 5 (VT ROUTE 12)

PROJECT DESCRIPTION: REMOVAL OF EXISTING BRIDGE AND REPLACEMENT WITH A NEW STRUCTURE.

LENGTH OF STRUCTURE: 85.84 FEET
LENGTH OF ROADWAY: 89.16 FEET
LENGTH OF PROJECT: 175.00 FEET

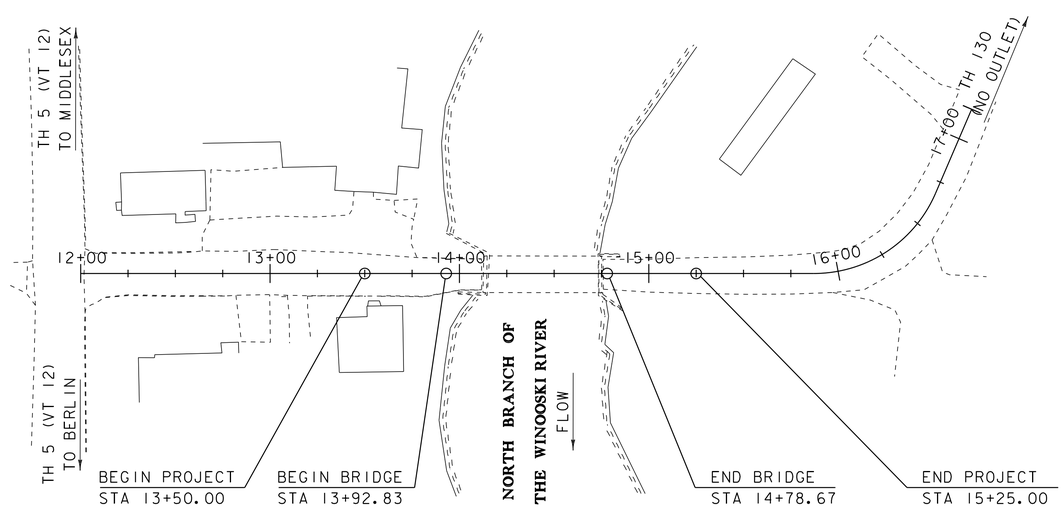

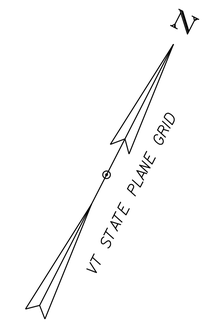

CONSTRUCTION IS TO BE CARRIED ON IN ACCORDANCE WITH THESE PLANS AND THE STANDARD SPECIFICATIONS FOR CONSTRUCTION DATED 2011, AS APPROVED BY THE FEDERAL HIGHWAY ADMINISTRATION ON JULY 20, 2011 FOR USE ON THIS PROJECT, INCLUDING ALL SUBSEQUENT REVISIONS AND SUCH REVISED SPECIFICATIONS AND SPECIAL PROVISIONS AS ARE INCORPORATED IN THESE PLANS.

QUALITY ASSURANCE PROGRAM : LEVEL 2

SURVEYED BY : R. GILMAN
SURVEYED DATE : 04-22-2013

DATUM
VERTICAL NAVD88
HORIZONTAL NAD83 (2011)

SCALE 1" = 40'-0"
40 0 40

PRELIMINARY PLANS
30-JUL-2015

DIRECTOR OF PROJECT DELIVERY
APPROVED _____ DATE _____

PROJECT MANAGER : CAROLYN CARLSON, P.E.

PROJECT NAME : MONTPELIER
PROJECT NUMBER : BO 1446 (36)

SHEET 1 OF 44 SHEETS

STATE OF VERMONT
AGENCY OF TRANSPORTATION

PRELIMINARY INFORMATION SHEET (BRIDGE)

Version
LRFD

INDEX OF SHEETS

PLAN SHEETS

1	TITLE SHEET
2	PRELIMINARY INFORMATION SHEET
3 - 4	TYPICAL SECTIONS 1 - 2
5	CONVENSTIONAL SYMBOLOGY LEGEND
6	TIE SHEET
7	LAYOUT SHEET
8	TH 130 PROFILE & BANKING DIAGRAM
9	TEMPORARY BRIDGE LAYOUT
10	UTILITY LAYOUT
11	BORING INFORMATION
12 - 13	BORING LOGS SHEET 1-2
14	PLAN AND ELEVATION
15 - 19	TH 130 CROSS SECTIONS 1-5
20	MATERIAL TRANSITION DETAIL
21 - 23	CHANNEL CROSS SECTIONS 1-3
24	EPSC NARRATIVE
25	EPSC EXISTING LAYOUT
26	EPSC CONSTRUCTION LAYOUT
27	EPSC FINAL LAYOUT
28 - 29	EPSC DETAIL 1-2

STANDARDS LIST

STANDARDS TO BE LISTED FOR FINAL DESIGN.

STRUCTURES DETAIL SHEETS

SD-501.00	CONCRETE DETAILS AND NOTES	5/7/2010
SD-502.00	CONCRETE DETAILS AND NOTES	5/7/2010
SD-516.10	BRIDGE JOINT ASHPALTIC PLUG	5/7/2010
SD-601.00	STRUCTURAL STEEL DETAILS AND NOTES	5/7/2010
SD-602.00	STRUCTURAL STEEL PLATE GIRDER DETAILS AND NOTES	5/7/2010

TRAFFIC DATA

YEAR	ADT	DHV	% D	% T	ADTT
2016	220	50	57	1.6	10
2036	240	55	57	2	15

20 year ESAL for flexible pavement from 2016 to 2036 : 24000
40 year ESAL for flexible pavement from 2016 to 2056 : 50000
Design Speed : 25 mph

AS BUILT "REBAR" DETAIL

LEVEL I	LEVEL II	LEVEL III
TYPE:	TYPE:	TYPE:
GRADE:	GRADE:	GRADE:

TEMPORARY BRIDGE PROFILE ALONG TEMP CL

BOTTOM OF BEAMS ELEV. = 529.60 FT

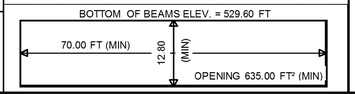

FINAL HYDRAULIC REPORT

HYDROLOGIC DATA

Date: February 2015

DRAINAGE AREA : 76.9 sq. mi.
CHARACTER OF TERRAIN : Hilly, mixture of open and forested land
STREAM CHARACTERISTICS : Sinuous, incised, alluvial
NATURE OF STREAMBED : Small gravel, sand and silt

PEAK FLOW DATA

Q 2.33 =	600 cfs	Q 50 =	1800 cfs
Q 10 =	1000 cfs	Q 100 =	2000 cfs
Q 25 =	1400 cfs	Q 500 =	2830 cfs

DATE OF FLOOD OF RECORD: Unknown
ESTIMATED DISCHARGE: Unknown
WATER SURFACE ELEV.: Unknown
NATURAL STREAM VELOCITY : @ Q25 = 2.6 fps
ICE CONDITIONS : Moderate
DEBRIS: Light to moderate
DOES THE STREAM REACH MAXIMUM HIGHWATER ELEV. RAPIDLY? No
IS ORDINARY RISE RAPID? No
IS STAGE AFFECTED BY UPSTREAM OR DOWNSTREAM CONDITIONS? Yes
IF YES, DESCRIBE: Wrightsville Dam may help mitigate flood flows to bridge
The dam downstream backwaters this site.

WATERSHED STORAGE: <1%
HEADWATERS:
UNIFORM: X
IMMEDIATELY ABOVE SITE:

EXISTING STRUCTURE INFORMATION

STRUCTURE TYPE: Rolled steel beam with concrete deck
YEAR BUILT: 1929
CLEAR SPAN(NORMAL TO STREAM): 59'
VERTICAL CLEARANCE ABOVE STREAMBED: 12'
WATERWAY OF FULL OPENING: 690 sq. ft.
DISPOSITION OF STRUCTURE: Remove and replace
TYPE OF MATERIAL UNDER SUBSTRUCTURE: See borings

WATER SURFACE ELEVATIONS AT:

Q2.33 =	526.0'	VELOCITY =	3.0 fps
Q10 =	527.0'	"	2.6 fps
Q25 =	527.6'	"	3.4 fps
Q50 =	528.2'	"	4.0 fps
Q100 =	528.7'	"	4.2 fps

LONG TERM STREAMBED CHANGES: None noted

IS THE ROADWAY OVERTOPPED BELOW Q100: No
FREQUENCY: N/A
RELIEF ELEVATION: 532.5'
DISCHARGE OVER ROAD @Q100: N/A

UPSTREAM STRUCTURE

TOWN:	Montpelier	DISTANCE:	7965'
HIGHWAY # :	TH 154	STRUCTURE #:	14
CLEAR SPAN:	88'	CLEAR HEIGHT:	
YEAR BUILT:	1984	FULL WATERWAY:	
STRUCTURE TYPE:	Rolled beam		

DOWNSTREAM STRUCTURE

TOWN:	Montpelier	DISTANCE:	2600'
HIGHWAY # :	Vine Street	STRUCTURE #:	
CLEAR SPAN:		CLEAR HEIGHT:	
YEAR BUILT:		FULL WATERWAY:	
STRUCTURE TYPE:			

LRFR LOAD RATING FACTORS

LOADING LEVELS	TRUCK						
	H-20	HL-93	3S2	6 AXLE	3A STR.	4A STR.	5A SEM
TONNAGE	20	36	36	66	30	34.5	38
INVENTORY							
POSTING							
OPERATING							
COMMENTS:							

PROPOSED STRUCTURE

STRUCTURE TYPE: Steel beam

CLEAR SPAN(NORMAL TO STREAM): ~81'
VERTICAL CLEARANCE ABOVE STREAMBED: ~11'
WATERWAY OF FULL OPENING: 650 sq. ft.

WATER SURFACE ELEVATIONS AT:

Q2.33 =	526.0'	VELOCITY=	1.5 fps
Q10 =	526.9'	"	2.2 fps
Q25 =	527.6'	"	2.7 fps
Q50 =	528.2'	"	3.2 fps
Q100 =	528.6'	"	3.4 fps

IS THE ROADWAY OVERTOPPED BELOW Q100: No
FREQUENCY: N/A
RELIEF ELEVATION: 532.5'
DISCHARGE OVER ROAD @Q100: N/A

AVERAGE LOW ELEVATION OF SUPERSTRUCTURE: 529.3'
VERTICAL CLEARANCE: @ Q25 = 1.7'

SCOUR: Contraction scour @Q500 = 3'. Piles should be designed to freestand to 6' below streambed.
REQUIRED CHANNEL PROTECTION: Stone Fill, Type II

PERMIT INFORMATION

AVERAGE DAILY FLOW:	160 cfs	DEPTH OR ELEVATION:
ORDINARY LOW WATER:	70 cfs	Elev 524.7'
ORDINARY HIGH WATER:	260 cfs	Elev 525.1'

TEMPORARY BRIDGE REQUIREMENTS

STRUCTURE TYPE: Temporary bridge upstream of existing bridge.
CLEAR SPAN (NORMAL TO STREAM): 70' minimum clear span
VERTICAL CLEARANCE ABOVE STREAMBED: Min. low beam elevation 529.6'
WATERWAY AREA OF FULL OPENING: 635 sq. ft.

ADDITIONAL INFORMATION

Wrightsville Reservoir is upstream of this site. There is a dam 2500' downstream of this site which backwaters this site.

TRAFFIC MAINTENANCE NOTES

1. MAINTAIN ONE-WAY TRAFFIC ON A TEMPORARY BRIDGE.
2. INSTALL AND MAINTAIN TRAFFIC SIGNALS.
3. SIDEWALKS ARE NOT NECESSARY
4. THE APPROACHES FOR THE TEMPORARY BRIDGE SHALL BE PAVED.

DESIGN VALUES

1. DESIGN LIVE LOAD		HL-93
2. FUTURE PAVEMENT	d_p:	3.0 INCH
3. DESIGN SPAN	L:	84.00 FT
4. MIN. MID-SPAN POS. CAMBER @ RELEASE (PRESTRESSED UNITS)	Δ:	- - -
5. PRESTRESSING STRAND	f_y:	- - -
6. PRESTRESSED CONCRETE STRENGTH	f'_c:	- - -
7. PRESTRESSED CONCRETE RELEASE STRENGTH	f'_{ci}:	- - -
8. CONCRETE, HIGH PERFORMANCE CLASS AA	f'_c:	4.0 KSI
9. CONCRETE, HIGH PERFORMANCE CLASS A	f'_c:	4.0 KSI
10. CONCRETE, HIGH PERFORMANCE CLASS B	f'_c:	3.5 KSI
11. CONCRETE, CLASS C	f'_c:	3.0 KSI
12. REINFORCING STEEL	f_y:	60 KSI
13. STRUCTURAL STEEL AASHTO M270	f_y:	- - -
14. NOMINAL BEARING RESISTANCE OF SOIL	q_n:	4.0 KSF
15. SOIL BEARING RESISTANCE FACTOR (REFER TO AASHTO LRFD)	ϕ:	- - -
16. NOMINAL BEARING RESISTANCE OF ROCK	q_n:	10.0 KSF
17. ROCK BEARING RESISTANCE FACTOR (REFER TO AASHTO LRFD)	ϕ:	- - -
18. PILE RESISTANCE FACTOR	ϕ:	- - -
19. LATERAL PILE DEFLECTION	Δ:	- - -
20. BASIC WIND SPEED	V_{3s}:	- - -
21. MINIMUM GROUND SNOW LOAD	p_g:	- - -
22. SEISMIC DATA PGA: 0	S_s:	- - -
	S_1:	- - -
23.		
24.		- - -
25.		- - -
26.		- - -

PROJECT NAME: **MONTPELIER**
PROJECT NUMBER: **BO 1446(36)**

FILE NAME:	s13j082pi.dgn	PLOT DATE:	5/18/2015
PROJECT LEADER:	C.W. CARLSON	DRAWN BY:	M. LONGSTREET
DESIGNED BY:	H. SALLS	CHECKED BY:	H. SALLS
PRELIMINARY INFORMATION SHEET		SHEET 2	OF 29

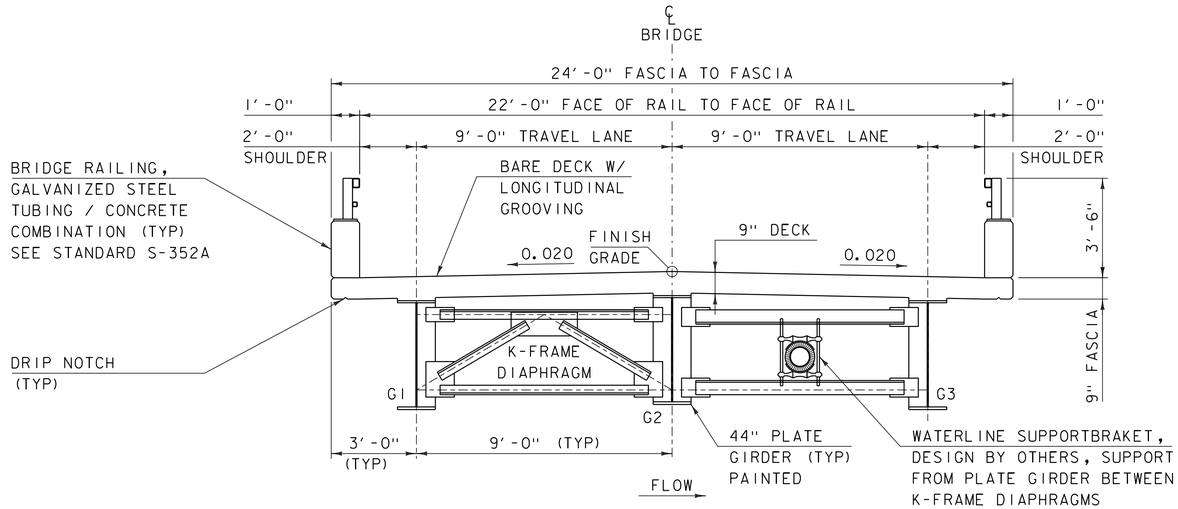

BRIDGE TYPICAL SECTION

SCALE 3/8" = 1'-0"

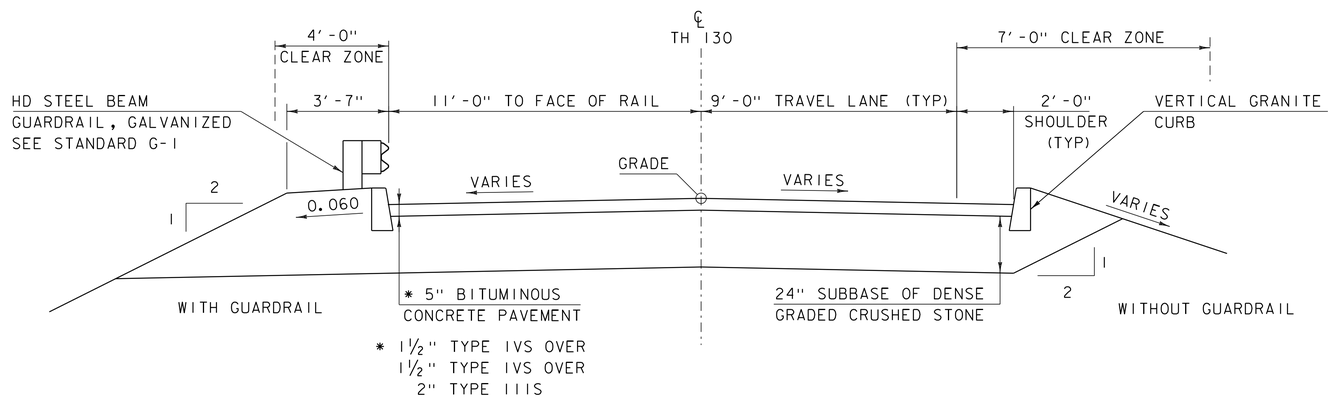

TH 130 TYPICAL SECTION

SCALE 3/8" = 1'-0"

MATERIAL TOLERANCES

(IF USED ON PROJECT)

SURFACE	
- PAVEMENT (TOTAL THICKNESS)	+/- 1/4"
- AGGREGATE SURFACE COURSE	+/- 1/2"
SUBBASE	+/- 1"
SAND BORROWS	+/- 1"

PROJECT NAME: MONTPELIER
PROJECT NUMBER: BO 1446 (36)

FILE NAME: s13j082typ.dgn
PROJECT LEADER: C. W. CARLSON
DESIGNED BY: H. SALLS
TYPICAL SECTIONS 1

PLOT DATE: 30-JUL-2015
DRAWN BY: M. LONGSTREET
CHECKED BY: H. SALLS
SHEET 3 OF 44

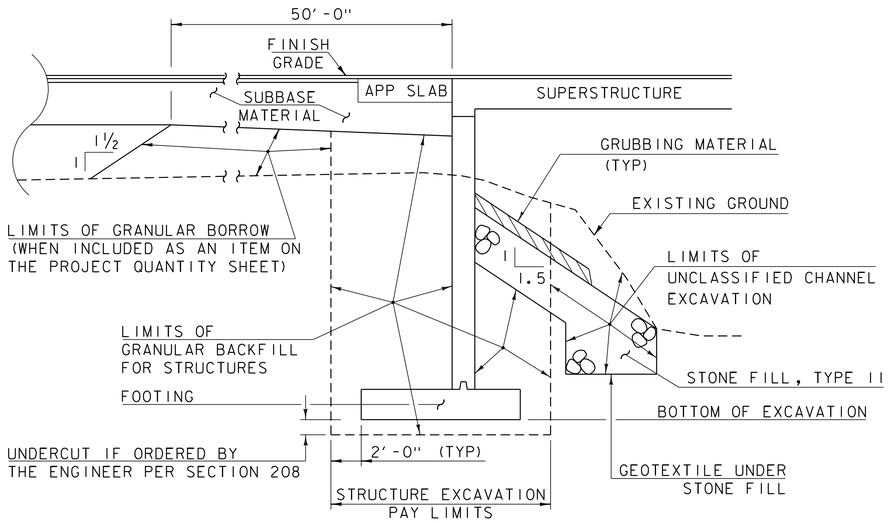

EARTHWORK SECTION ABUTMENT 1

(NOT TO SCALE)

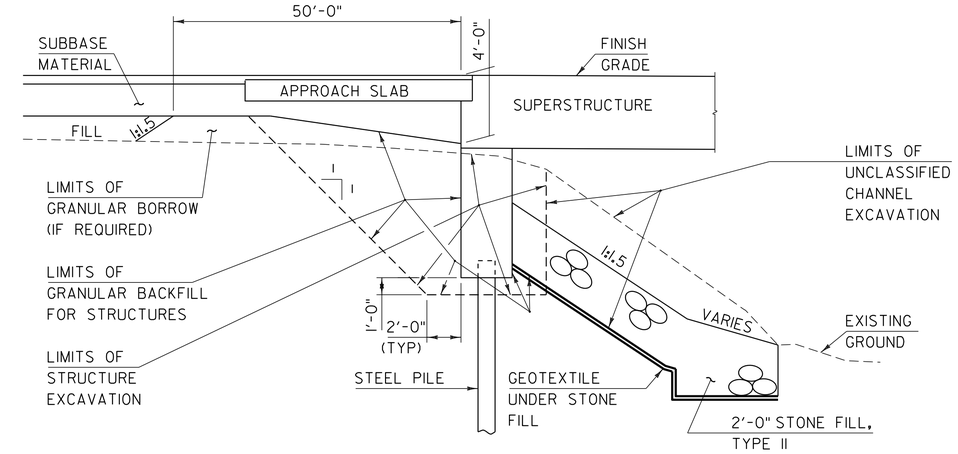

EARTHWORK SECTION ABUTMENT 2

NOT TO SCALE

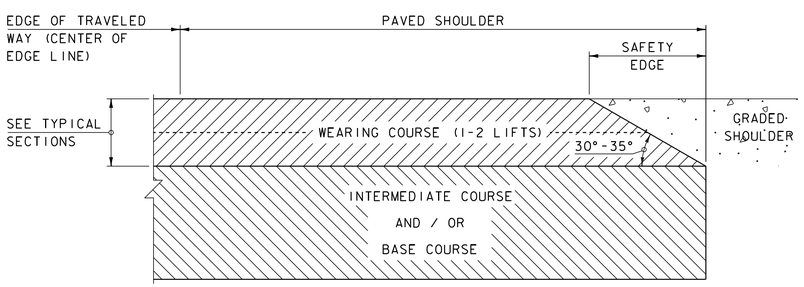

SAFETY EDGE DETAIL

NOT TO SCALE

1. LEVELING COURSE MAY INCLUDE THE "SAFETY EDGE" AT THE CONTRACTOR'S CHOICE.
2. THE EDGE OF PAVEMENT SHALL BE FORMED IN SUCH A WAY THAT THE BITUMINOUS CONCRETE PAVEMENT IS EXTRUDED OR COMPRESSED TO FORM THE 30 TO 35 DEGREE ANGLE. DEVICES THAT SIMPLY STRIKE-OFF THE MIX WITHOUT PROVIDING ANY COMPACTIVE EFFORT WILL NOT BE ALLOWED.
3. THE PAVED SHOULDER EXTENDS FROM THE EDGE OF TRAVELED WAY TO THE EDGE OF THE WEARING COURSE, INCLUDING THE "SAFETY EDGE".

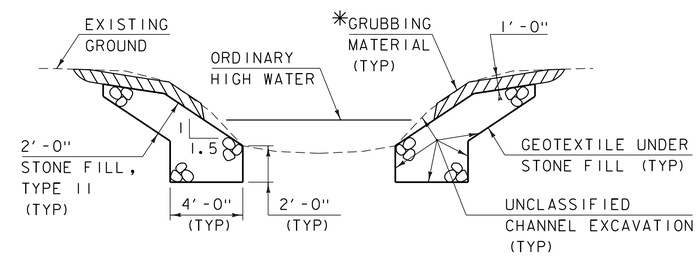

TYPICAL CHANNEL SECTION

(NOT TO SCALE)

*GRUBBING MATERIAL SHALL NOT BE PLACED ON THE STONE FILL IN THE AREA UNDER THE BRIDGE. WHENEVER CHANNEL SLOPE INTERSECTS ROADWAY SUBBASE, GRUBBING MATERIAL SHALL BEGIN AT THE BOTTOM OF SUBBASE.

PROJECT NAME: MONTPELIER	
PROJECT NUMBER: BO 1446 (36)	
FILE NAME: sl3j082typ.dgn	PLOT DATE: 30-JUL-2015
PROJECT LEADER: C. W. CARLSON	DRAWN BY: M. LONGSTREET
DESIGNED BY: H. SALLS	CHECKED BY: H. SALLS
TYPICAL SECTIONS 2	SHEET 4 OF 44

GENERAL

1. ALL MATERIALS AND CONSTRUCTION SHALL CONFORM TO THE STATE OF VERMONT AGENCY OF TRANSPORTATION STANDARD SPECIFICATIONS FOR CONSTRUCTION DATED 2006, AND ITS LATEST REVISIONS, AND THE AASHTO STANDARD SPECIFICATIONS FOR HIGHWAY BRIDGES, DATED 2002, AND ITS LATEST REVISIONS.

2. DURING CONSTRUCTION, TRAFFIC SHALL BE MAINTAINED ON A TWO-WAY TEMPORARY BRIDGE CONSTRUCTED DOWNSTREAM OF THE EXISTING STRUCTURE. CONSTRUCTION AND MAINTENANCE OF THE TEMPORARY BRIDGE AND ITS APPROACHES SHALL BE PAID FOR UNDER ITEM 528.11, “TWO-WAY TEMPORARY BRIDGE.”

3. THE CONTRACTOR SHALL ERECT AND MAINTAIN ALL TEMPORARY ON AND OFF-PROJECT SIGNS AND BARRICADES AS SHOWN IN THE PLANS AND AS DIRECTED BY THE RESIDENT ENGINEER. PAYMENT FOR THIS WORK SHALL BE CONSIDERED INCIDENTAL TO ITEM 641.10, “TRAFFIC CONTROL.”

4. FULL ACCESS TO ALL SIDE ROADS AND DRIVES WITHIN THE PROJECT LIMITS SHALL BE MAINTAINED AT ALL TIMES. THIS WORK SHALL BE CONSIDERED INCIDENTAL TO ITEM 641.10, “TRAFFIC CONTROL.”

5. THE CONTRACTOR SHALL TAKE ALL PRECAUTIONS NECESSARY TO PREVENT SILTATION OR POLLUTION, IN PARTICULAR THE DISCHARGE OF RAW CONCRETE INTO THE EAST BRANCH OF THE PASSUMPSIC RIVER, AS DIRECTED BY THE RESIDENT ENGINEER AND STANDARD SPECIFICATIONS SECTION 105.

6. FOR INFORMATION REGARDING UTILITIES, SEE THE SPECIAL PROVISIONS.

7. ALL DIMENSIONS SHOWN IN THE PLANS ARE HORIZONTAL OR VERTICAL AND ARE GIVEN AT 68 DEGREES FAHRENHEIT, UNLESS NOTED OTHERWISE

EARTHWORK AND RELATED ITEMS

8. THE TEMPORARY BRIDGE AND ITS APPROACHES SHALL BE CONSTRUCTED AND PAID FOR IN ACCORDANCE WITH ITEM 528.11, “TWO-WAY TEMPORARY BRIDGE”. THE APPROACHES TO THE TEMPORARY BRIDGE SHALL BE PAVED WITH 3 INCHES OF PAVEMENT. SEE THE SPECIAL PROVISIONS FOR ADDITIONAL DETAILS ON THIS ITEM.

9. TEMPORARY CONSTRUCTION FILLS WITHIN THE WATERCOURSE FOR ANY PURPOSE SHALL CONSIST OF CLEAN STONE FILL ONLY. NO OTHER FILLING IN THE STREAM SHALL OCCUR WITHOUT THE APPROVAL OF THE STREAM ALTERATION ENGINEER.

10. REMOVAL OF THE EXISTING SUPERSTRUCTURE AND THOSE PORTIONS OF THE EXISTING SUBSTRUCTURES NOT REMOVED UNDER ITEM 208.35, "COFFERDAM EXCAVATION, ROCK" OR ITEM 203.27, "UNCLASSIFIED CHANNEL EXCAVATION" SHALL BE PAID FOR UNDER ITEM 529.15 "REMOVAL OF STRUCTURE".

11. COFFERDAMS ARE REQUIRED FOR THE CONSTRUCTION OF THE NEW SUBSTRUCTURE UNITS. COFFERDAMS SHALL CONSIST OF STEEL SHEETING ONLY. PAYMENT FOR COFFERDAM EXCAVATION WILL BE MADE ONLY FOR SUCH EXCAVATION WITHIN THE LIMITS SHOWN ON THE PLANS.

12. THE SUBSTRUCTURES HAVE BEEN DESIGNED FOR THE FOOTING ELEVATIONS SHOWN ON THE PLANS. THE INTENTION IS TO USE SUBFOOTINGS OF CONCRETE, CLASS “C” IN AREAS WHERE THE LEDGE IS MORE THAN 6 INCHES BELOW THE DESIGN BOTTOM OF FOOTING ELEVATIONS. AFTER THE LEDGE HAS BEEN EXPOSED, ADJUSTMENTS TO THE BOTTOM OF FOOTING ELEVATIONS MAY BE NECESSARY TO MINIMIZE THE LEDGE REMOVAL AND/OR REDUCE THE AMOUNT OF SUBFOOTING CONCRETE. CONTACT THE PROJECT MANAGER FOR POSSIBLE REDESIGN IF THE LEDGE PROFILES DIFFER FROM THOSE SHOWN ON THE PLANS. NO FURTHER WORK SHALL BE DONE ON THE FOOTINGS UNTIL A REPLY IS RECEIVED FROM THE STRUCTURES SECTION. A TURN-AROUND TIME OF UP TO FIVE BUSINESS DAYS MAY BE EXPECTED.

13. THE COST OF LEDGE EXCAVATION SHALL BE PAID UNDER ITEM 208.35,”COFFERDAM EXCAVATION, ROCK”. ALL OVERBREAKAGE SHALL BE REPLACED WITH “CONCRETE, CLASS C”. A MAXIMUM OF 6 INCHES AVERAGE OVERBREAKAGE DEPTH SHALL BE PAID FOR. ANY ADDITIONAL CONCRETE SHALL BE AT THE CONTRACTOR’S EXPENSE.

14. THE “STONE FILL, TYPE IV” UNDER THE BRIDGE AS SHOWN IN THE PLANS SHALL BE PLACED BEFORE THE NEW STEEL GIRDERS ARE SET.

15. “STONE FILL, TYPE I” SHALL BE USED FOR EROSION CONTROL AS SHOWN IN THE PLANS AND AT THE DISCRETION OF THE RESIDENT ENGINEER. PAYMENT FOR MATERIAL AND PLACEMENT SHALL BE MADE UNDER ITEM 613.10, “STONE FILL, TYPE I”.

STRUCTURAL STEEL

16. THE EXISTING STRUCTURAL STEEL IS PAINTED WITH A MATERIAL THAT MAY CONTAIN LEAD. THE CONTRACTOR SHALL FOLLOW ALL APPLICABLE REGULATIONS WHEN HANDLING AND WORKING WITH THIS STEEL. THE REMOVED STRUCTURAL STEEL IS THE PROPERTY OF THE CONTRACTOR. THE CONTRACTOR SHALL INDEMNIFY AND HOLD THE STATE, ITS OFFICERS, AND EMPLOYEES HARMLESS CONCERNING THE CONTRACTOR’S USE OR DISPOSITION OF THE REMOVED EXISTING STRUCTURAL STEEL.

17. UNLESS OTHERWISE NOTED, ALL NEW STRUCTURAL STEEL SHALL CONFORM TO AASHTO M270/M270M GRADE 50W AND SHALL BE PAID FOR UNDER ITEM 506.55, “STRUCTURAL STEEL (PLATE GIRDER)”.

18. STRUCTURAL STEEL MEMBERS DESIGNATED “CVN” IN THE PLANS SHALL BE CHARPY V-NOTCH TESTED IN ACCORDANCE WITH SUBSECTION 714.01 OF THE STANDARD SPECIFICATIONS.

19. ALL FIELD CONNECTIONS SHALL BE MADE USING 7/8 INCH BOLTS MEETING AASHTO M 164, TYPE 3. UNLESS OTHERWISE NOTED, HOLE DIAMETER SHALL BE 15/16 INCH. ANY CONNECTIONS NOT DESIGNATED SHALL BE DETAILED BY THE FABRICATOR AND SUBMITTED TO THE STRUCTURES ENGINEER FOR APPROVAL.

20. AFTER SUPERSTRUCTURE STEEL HAS BEEN ERECTED, ELEVATIONS ALONG THE TOP OF THE GIRDERS SHALL BE TAKEN AS DIRECTED BY THE RESIDENT ENGINEER FOR USE IN DETERMINING FINISHED GRADES.

21. FLEMING BRACKETS OR SIMILAR FALSEWORK SHALL BE SPACED AS REQUIRED BY DESIGN, BUT SHALL BE LIMITED TO A MAXIMUM SPACING OF 4 FEET. THE DESIGN OF FALSEWORK SHALL BE THE RESPONSIBILITY OF THE CONTRACTOR.

22. ANY BOLT HOLES IN THE WEBS OF FASCIA GIRDERS NOT OTHERWISE FILLED SHALL BE FILLED WITH BUTTON HEAD OR HEX HEAD BOLTS. THE BOLTS SHALL BE TIGHTENED IN ACCORDANCE WITH SUBSECTION 506.19 OF THE STANDARD SPECIFICATIONS.

23. ENDS OF GIRDERS ARE TO BE VERTICAL IN FINAL POSITION.

CONCRETE

24. SUBSTRUCTURE CONCRETE AND APPROACH SLABS SHALL BE HIGH PERFORMANCE CLASS B AND SHALL BE PAID FOR UNDER ITEM 501.34, “CONCRETE, HIGH PERFORMANCE CLASS B”. DECK (INCLUDING CURTAIN WALLS AND APPROACH SLAB BRACKETS) AND CURB CONCRETE SHALL BE HIGH PERFORMANCE CLASS A AND SHALL BE PAID FOR UNDER ITEM 501.33, “CONCRETE, HIGH PERFORMANCE CLASS A”.

25. CONCRETE FOR SUBFOOTING SHALL BE PAID FOR UNDER ITEM 541.30, “CONCRETE, CLASS C”. PAYMENT FOR SUBFOOTING CONCRETE WILL BE MADE ONLY FOR CONCRETE WITHIN THE LIMITS FOR SUBFOOTING SHOWN ON THE PLANS.

26. THE TOP SURFACE OF SUBFOOTING POURS SHALL BE ROUGHENED TO A RAKE FINISH TO HELP PREVENT SLIDING AT THE SUBFOOTING/FOOTING INTERFACE.

27. SURFACES OF BRIDGE SEATS UNDER BEARING DEVICES SHALL BE LEVEL. ALL OTHER AREAS OF BRIDGE SEATS SHALL BE SLOPED 1/2 INCH PER FOOT. THE ENTIRE BRIDGE SEAT SURFACE SHALL BE GIVEN A FLOAT FINISH.

28. CONCRETE PORTIONS OF ABUTMENTS AND WINGWALLS ABOVE ADJACENT BRIDGE SEAT ELEVATIONS SHALL NOT BE PLACED UNTIL FINISH GRADES HAVE BEEN DETERMINED BY THE RESIDENT ENGINEER.

29. IN ACCORDANCE WITH SUBSECTION 506.23(A) OF THE STANDARD SPECIFICATIONS FOR CONSTRUCTION AND AS DIRECTED BY THE RESIDENT ENGINEER, THE CONTRACTOR SHALL TAKE MEASURES NECESSARY TO PROTECT ALL SUBSTRUCTURE CONCRETE FROM STAINING DUE TO OXIDE FORMATION ON THE STRUCTURAL STEEL PRIOR TO PLACEMENT OF THE DECK. THESE MEASURES WILL NOT BE PAID FOR SEPARATELY BUT SHALL BE CONSIDERED INCIDENTAL TO ITEM 501.34, “CONCRETE, HIGH PERFORMANCE CLASS B”. ANY SUCH STAINING THAT OCCURS PRIOR TO DECK PLACEMENT SHALL BE REMOVED AT NO ADDITIONAL COST TO THE STATE.

30. THE DECK IS TO BE POURED IN ONE CONTINUOUS POUR WITH A MAXIMUM DURATION OF EIGHT HOURS. IF CIRCUMSTANCES BEYOND THE CONTRACTOR’S CONTROL PREVENT THIS FROM BEING ACCOMPLISHED, A TRANSVERSE CONSTRUCTION JOINT SHALL BE USED BETWEEN ADJACENT POURS. A MINIMUM 96 HOUR DELAY BETWEEN ADJACENT POURS SHALL BE OBSERVED.

31. LOADING ALLOWANCE ON THE NEW DECK SHALL BE IN ACCORDANCE WITH SUBSECTION 501.18(B) OF THE STANDARD SPECIFICATIONS.

32. ALL EXPOSED EDGES OF CONCRETE SHALL BE CHAMFERED 1 INCH X 1 INCHff.

33. WATER REPELLENT, SILANE, SHALL BE APPLIED TO ALL EXPOSED CONCRETE SURFACES, EXCEPT THE UNDERSIDE OF THE DECK BETWEEN DRIP NOTCHES.

34. JOINTS AND SCORE MARKS IN CONCRETE SHALL BE CONSTRUCTED AS SHOWN IN THE PLANS OR AS DIRECTED BY THE RESIDENT ENGINEER.

35. THE KEY IN CONCRETE CONSTRUCTION JOINTS SHALL BE MONOLITHIC AND CONTINUOUS FOR THE FULL LENGTH OF THE JOINT. UPWARD KEYS SHALL BE PLACED INTEGRALLY WITH THE CONCRETE BELOW THE JOINT.

36. ALL SUPERSTRUCTURE REINFORCING STEEL SHALL BE EPOXY COATED AND PAID FOR UNDER ITEM 507.17, "EPOXY COATED REINFORCING STEEL". CUTTING AND REPAIRING DAMAGED AREAS OF COATED REINFORCING STEEL SHALL BE PERFORMED IN ACCORDANCE WITH SUBSECTION 507.04 OF THE STANDARD SPECIFICATIONS.

37. MINIMUM COVER FOR REINFORCING STEEL SHALL BE AS INDICATED IN THE PLANS.

38. REINFORCING STEEL PLACEMENT TOLERANCES SHALL BE:
    SPACING: +/- 1 INCH
    CLEARANCE: +/- 1/4 INCH

STATE OF VERMONT
AGENCY OF TRANSPORTATION

QUANTITY SHEET 1

SUMMARY OF ESTIMATED QUANTITIES					TOTALS		DESCRIPTIONS				DETAILED SUMMARY OF QUANTITIES		
	ROADWAY	EROSION CONTROL	BRIDGE	FULL C.E. ITEMS	GRAND TOTAL	FINAL	UNIT	ITEMS	ITEM NUMBER	ROUND	QUANTITIES	UNIT	ITEMS
	1				1		LS	CLEARING AND GRUBBING, INCLUDING INDIVIDUAL TREES AND STUMPS	201.10				
	550				550		CY	COMMON EXCAVATION	203.15				
			500		500		CY	UNCLASSIFIED CHANNEL EXCAVATION	203.27				
	1				1		CY	TRENCH EXCAVATION OF EARTH, EXPLORATORY (N.A.B.I.)	204.22				
			400		400		CY	STRUCTURE EXCAVATION	204.25				
			140		140		CY	GRANULAR BACKFILL FOR STRUCTURES	204.30				
	560				560		SY	COLD PLANING, BITUMINOUS PAVEMENT	210.10				
	320				320		CY	SUBBASE OF DENSE GRADED CRUSHED STONE	301.35				
	10				10		CY	AGGREGATE SURFACE COURSE	401.10				
	4				4		CWT	EMULSIFIED ASPHALT	404.65				
	1				1		LU	PRICE ADJUSTMENT, ASPHALT CEMENT (N.A.B.I.)	406.50				
			88		88		CY	CONCRETE, HIGH PERFORMANCE CLASS A	501.33				
			104		104		CY	CONCRETE, HIGH PERFORMANCE CLASS B	501.34				
			1		1		LS	FURNISHING EQUIPMENT FOR DRIVING PILING	504.10				
			128		128		LF	STEEL PILING, HP 12 X 84	505.165				
			1		1		EACH	DYNAMIC PILE LOADING TEST	505.45				
			58723		58723		LB	STRUCTURAL STEEL, PLATE GIRDER	506.55				
			21120		21120		LB	REINFORCING STEEL, LEVEL I	507.11				
			13160		13160		LB	REINFORCING STEEL, LEVEL II	507.12				
			50		50		LF	DRILLING AND GROUTING DOWELS	507.16				
			1		1		LS	SHEAR CONNECTORS (510 - 7/8" X 7")	508.15				
			11		11		GAL	WATER REPELLENT, SILANE	514.10				
			24		24		LF	BRIDGE EXPANSION JOINT, ASPHALTIC PLUG	516.10				
			24		24		LF	JOINT SEALER, HOT POURED	524.11				
			175		175		LF	BRIDGE RAILING, GALVANIZED STEEL TUBING/CONCRETE COMBINATION	525.45				
			1		1		LS	ONE-WAY TEMPORARY BRIDGE	528.10				
			1		1		EACH	REMOVAL OF STRUCTURE (1218 SF - EST.)	529.15				
			3		3		EACH	BEARING DEVICE ASSEMBLY, STEEL REINFORCED ELASTOMERIC PAD (INTEGRAL ABUTMENT)	531.17				
			3		3		EACH	BEARING DEVICE ASSEMBLY, STEEL REINFORCED ELASTOMERIC PAD (SPREAD FOOTING)	531.17				
	1				1		EACH	CHANGING ELEVATION OF DROP INLETS, CATCH BASINS, OR MANHOLES	604.40				
	1				1		TON	DUST AND ICE CONTROL WITH CALCIUM CHLORIDE	609.15				
	170				170		CY	STONE FILL, TYPE II	613.11				
	128				128		LF	REMOVING AND RESETTING CURB	616.40				
	1				1		SY	PORTLAND CEMENT CONCRETE SIDEWALK, 5 INCH	618.10				
	63				63		LF	HD STEEL BEAM GUARDRAIL, GALVANIZED	621.21				
	4				4		EACH	ANCHOR FOR STEEL BEAM RAIL	621.60				
	4				4		EACH	GUARDRAIL APPROACH SECTION, CONC COMB BRIDGE RAILING TL-3	621.748				
	115				115		LF	REMOVAL AND DISPOSAL OF GUARDRAIL	621.80				
	100				100		HR	UNIFORMED TRAFFIC OFFICERS	630.10				

PROJECT NAME: MONTPELIER
PROJECT NUMBER: BO 1446 (36)

FILE NAME: s13j082qs.dgn
PROJECT LEADER: C. W. CARLSON
DESIGNED BY: H. SALLS
QUANTITY SHEET 1

PLOT DATE: 30-JUL-2015
DRAWN BY: R. PELLETT
CHECKED BY: H. SALLS
SHEET 6 OF 44

STATE OF VERMONT
AGENCY OF TRANSPORTATION

QUANTITY SHEET 2

SUMMARY OF ESTIMATED QUANTITIES					TOTALS		DESCRIPTIONS			
ROADWAY	EROSION CONTROL	BRIDGE	FULL C.E. ITEMS		GRAND TOTAL	FINAL	UNIT	ITEMS	ITEM NUMBER	ROUND
1000					1000		HR	FLAGGERS	630.15	
			1		1		LS	FIELD OFFICE, ENGINEERS	631.10	
			1		1		LS	TESTING EQUIPMENT, CONCRETE	631.16	
			1		1		LS	TESTING EQUIPMENT, BITUMINOUS	631.17	
			3000		3000		DL	FIELD OFFICE TELEPHONE (N.A.B.I.)	631.26	
1					1		LS	MOBILIZATION/DEMOBILIZATION	635.11	
840					840		LF	4 INCH YELLOW LINE	646.21	
11					11		LF	24 INCH STOP BAR	646.26	
4					4		EACH	LETTER OR SYMBOL	646.30	
300					300		SY	GEOTEXTILE UNDER STONE FILL	649.31	
	60				60		SY	GEOTEXTILE FOR SILT FENCE	649.51	
	42				42		SY	GEOTEXTILE FOR SILT FENCE, WOVEN WIRE REINFORCED	649.515	
	87				87		SY	GEOTEXTILE FOR FILTER CURTAIN	649.61	
	10				10		LB	SEED	651.15	
	10				10		LB	SEED, WINTER RYE	651.17	
	100				100		LB	FERTILIZER	651.18	
	1				1		TON	AGRICULTURAL LIMESTONE	651.20	
	1				1		TON	HAY MULCH	651.25	
	70				70		CY	TOPSOIL	651.35	
	1180				1180		SY	GRUBBING MATERIAL	651.40	
	1				1		LS	EPSC PLAN	652.10	
	5				5		HR	MONITORING EPSC PLAN	652.20	
	1				1		LU	MAINTENANCE OF EPSC PLAN (N.A.B.I.)	652.30	
	130				130		SY	TEMPORARY EROSION MATTING	653.20	
	30				30		CY	VEHICLE TRACKING PAD	653.35	
	1				1		EACH	INLET PROTECTION DEVICE, TYPE I	653.40	
	190				190		LF	BARRIER FENCE	653.50	
	300				300		LF	PROJECT DEMARCATION FENCE	653.55	
5					5		SF	TRAFFIC SIGNS, TYPE A	675.20	
10					10		LF	SQUARE TUBE SIGN POST AND ANCHOR	675.341	
1					1		EACH	REMOVING SIGNS	675.50	
2					2		EACH	TEMPORARY TRAFFIC SIGNAL SYSTEM	678.40	
1					1		LU	PRICE ADJUSTMENT, FUEL (N.A.B.I.)	690.50	
7					7		EACH	SPECIAL PROVISION (CPM SCHEDULING)	900.620	
1					1		LS	SPECIAL PROVISION (PROTECTION OF SEWER LINE)	900.645	
1					1		LS	SPECIAL PROVISION (TRAFFIC CONTROL, ALL-INCLUSIVE.)	900.645	
1					1		LS	SPECIAL PROVISION (WATER LINE)	900.645	
1					1		LU	SPECIAL PROVISION (MAT DENSITY PAY ADJUSTMENT, SMALL QUANTITY)(N.A.B.I.)	900.650	
1					1		LU	SPECIAL PROVISION (MIXTURE PAY ADJUSTMENT)(N.A.B.I.)	900.650	
162					162		TON	SPECIAL PROVISION (BITUMINOUS CONCRETE PAVEMENT)	900.680	

DETAILED SUMMARY OF QUANTITIES

QUANTITIES	UNIT	ITEMS

PROJECT NAME: MONTPELIER
PROJECT NUMBER: BO 1446 (36)

FILE NAME: s13j082qs.dgn
PROJECT LEADER: C. W. CARLSON
DESIGNED BY: H. SALLS
QUANTITY SHEET 2

PLOT DATE: 30-JUL-2015
DRAWN BY: R. PELLETT
CHECKED BY: H. SALLS
SHEET 7 OF 44

STATE OF VERMONT
AGENCY OF TRANSPORTATION

BRIDGE QUANTITY SHEET 1

SUMMARY OF BRIDGE QUANTITIES									TOTALS	DESCRIPTIONS			DETAILED SUMMARY OF QUANTITIES		
	DECK	APPROACH SLAB #1	APPROACH SLAB #2	ABUTMENT #1	ABUTMENT #2	CHANNEL	BRIDGE TOTAL		UNIT	ITEMS	ITEM NUMBER		QUANTITIES	UNIT	ITEMS
						500	500		CY	UNCLASSIFIED CHANNEL EXCAVATION	203.27				
				258	142		400		CY	STRUCTURE EXCAVATION	204.25				
				71	69		140		CY	GRANULAR BACKFILL FOR STRUCTURES	204.30				
	59			8	21		88		CY	CONCRETE, HIGH PERFORMANCE CLASS A	501.33				
		14	14	53	23		104		CY	CONCRETE, HIGH PERFORMANCE CLASS B	501.34				
					1		1		LS	FURNISHING EQUIPMENT FOR DRIVING PILING	504.10				
					128		128		LF	STEEL PILING, HP 12 X 84	505.165				
					1		1		EACH	DYNAMIC PILE LOADING TEST	505.45				
	58723						58723		LB	STRUCTURAL STEEL, PLATE GIRDER	506.55				
	17966	1577	1577				21120		LB	REINFORCING STEEL, LEVEL I	507.11				
				7473	5687		13160		LB	REINFORCING STEEL, LEVEL II	507.12				
				50			50		LF	DRILLING AND GROUTING DOWELS	507.16				
	1						1		LS	SHEAR CONNECTORS (510 - 7/8" X 7")	508.15				
	7			2	2		11		GAL	WATER REPELLENT, SILANE	514.10				
					24		24		LF	BRIDGE EXPANSION JOINT, ASPHALTIC PLUG	516.10				
					24		24		LF	JOINT SEALER, HOT POURED	524.11				
	175						175		LF	BRIDGE RAILING, GALVANIZED STEEL TUBING/CONCRETE COMBINATION	525.45				
	1						1		LS	ONE-WAY TEMPORARY BRIDGE	528.10				
	1						1		EACH	REMOVAL OF STRUCTURE (1218 SF - EST.)	529.15				
					3		3		EACH	BEARING DEVICE ASSEMBLY, STEEL REINFORCED ELASTOMERIC PAD (INTEGRAL ABUTMENT)	531.17				
				3			3		EACH	BEARING DEVICE ASSEMBLY, STEEL REINFORCED ELASTOMERIC PAD (SPREAD FOOTING)	531.17				

PROJECT NAME: MONTPELIER
PROJECT NUMBER: BO 1446 (36)

FILE NAME: s13j082qs.dgn
PROJECT LEADER: C. W. CARLSON
DESIGNED BY: H. SALLS
BRIDGE QUANTITY SHEET

PLOT DATE: 30-JUL-2015
DRAWN BY: R. PELLETT
CHECKED BY: H. SALLS
SHEET 8 OF 44

GENERAL INFORMATION

SYMBOLOGY LEGEND NOTE

THE SYMBOLOGY ON THIS SHEET IS INTENDED TO COVER STANDARD CONVENTIONAL SYMBOLOGY. THE SYMBOLOGY IS USED FOR EXISTING & PROPOSED FEATURES WITH HEAVIER LINEWEIGHT, IN COMBINATION WITH PROJECT ANNOTATION, AS NOTED ON PROJECT PLAN SHEETS. THIS LEGEND SHEET COVERS THE BASICS. SYMBOLOGY ON PLANS MAY VARY, PLAN ANNOTATIONS AND NOTES SHOULD BE USED TO CLARIFY AS NEEDED.

R.O.W. ABBREVIATIONS (CODES) & SYMBOLS

POINT	CODE	DESCRIPTION
	CH	CHANNEL EASEMENT
	CONST	CONSTRUCTION EASEMENT
	CUL	CULVERT EASEMENT
	D&C	DISCONNECT & CONNECT
	DIT	DITCH EASEMENT
	DR	DRAINAGE EASEMENT
	DRIVE	DRIVEWAY EASEMENT
	EC	EROSION CONTROL
	HWY	HIGHWAY EASEMENT
	I&M	INSTALL & MAINTAIN EASEMENT
	LAND	LANDSCAPE EASEMENT
	R&RES	REMOVE & RESET
	R&REP	REMOVE & REPLACE
	SR	SLOPE RIGHT
	UE	UTILITY EASEMENT
	(P)	PERMANENT EASEMENT
	(T)	TEMPORARY EASEMENT
■	BNDNS	BOUND SET
▣	BNDNS	BOUND TO BE SET
●	IPNS	IRON PIN SET
◎	IPNS	IRON PIN TO BE SET
⊠	CALC	EXISTING ROW POINT
○	PROW	PROPOSED ROW POINT
[LENGTH]		LENGTH CARRIED ON NEXT SHEET

COMMON TOPOGRAPHIC POINT SYMBOLS

POINT	CODE	DESCRIPTION
	APL	BOUND APPARENT LOCATION
	BM	BENCHMARK
	BND	BOUND
	CB	CATCH BASIN
	COMB	COMBINATION POLE
	DITHR	DROP INLET THROATED DNC
	EL	ELECTRIC POWER POLE
	FPOLE	FLAGPOLE
	GASFIL	GAS FILLER
	GP	GUIDE POST
	GSO	GAS SHUT OFF
	GUY	GUY POLE
	GUYW	GUY WIRE
	GV	GATE VALUE
	H	TREE HARDWOOD
	HCTRL	CONTROL HORIZONTAL
	HVCTRL	CONTROL HORIZ. & VERTICAL
	HYD	HYDRANT
	IP	IRON PIN
	IPIPE	IRON PIPE
	LI	LIGHT - STREET OR YARD
	MB	MAILBOX
	MH	MANHOLE (MH)
	MM	MILE MARKER
	PM	PARKING METER
	PMK	PROJECT MARKER
	POST	POST STONE/WOOD
	RRSIG	RAILROAD SIGNAL
	RRSL	RAILROAD SWITCH LEVER
	S	TREE SOFTWOOD
	SAT	SATELLITE DISH
	SHRUB	SHRUB
	SIGN	SIGN
	STUMP	STUMP
	TEL	TELEPHONE POLE
	TIE	TIE
	TSIGN	SIGN W/DOUBLE POST
	VCTRL	CONTROL VERTICAL
	WELL	WELL
	WSO	WATER SHUT OFF

THESE ARE COMMON VAOT SURVEY POINT SYMBOLS FOR EXISTING FEATURES, ALSO USED FOR PROPOSED FEATURES WITH HEAVIER LINEWEIGHT, IN COMBINATION WITH PROPOSED ANNOTATION.

PROPOSED GEOMETRY CODES

CODE	DESCRIPTION
PC	POINT OF CURVATURE
PI	POINT OF INTERSECTION
CC	CENTER OF CURVE
PT	POINT OF TANGENCY
PCC	POINT OF COMPOUND CURVE
PRC	POINT OF REVERSE CURVE
POB	POINT OF BEGINNING
POE	POINT OF ENDING
STA	STATION PREFIX
AH	AHEAD STATION SUFFIX
BK	BACK STATION SUFFIX
D	CURVE DEGREE OF (100FT)
R	CURVE RADUIS OF
T	CURVE TANGENT LENGTH
L	CURVE LENGTH OF
E	CURVE EXTERNAL DISTANCE

UTILITY SYMBOLOGY

UNDERGROUND UTILITIES

UGU	UTILITY (GENERIC-UNKNOWN)
UT	TELEPHONE
UE	ELECTRIC
UC	CABLE (TV)
UEC	ELECTRIC+CABLE
UET	ELECTRIC+TELEPHONE
UCT	CABLE+TELEPHONE
UECT	ELECTRIC+CABLE+TELEP.
G	GAS LINE
W	WATER LINE
S	SANITARY SEWER (SEPTIC)

ABOVE GROUND UTILITIES (AERIAL)

AGU	UTILITY (GENERIC-UNKNOWN)
T	TELEPHONE
E	ELECTRIC
C	CABLE (TV)
EC	ELECTRIC+CABLE
ET	ELECTRIC+TELEPHONE
AER E&T	ELECTRIC+TELEPHONE
CT	CABLE+TELEPHONE
ECT	ELECTRIC+CABLE+TELEP.
	UTILITY POLE GUY WIRE

PROJECT CONSTRUCTION SYMBOLOGY

PROJECT DESIGN & LAYOUT SYMBOLOGY

CZ	CLEAR ZONE
	PLAN LAYOUT MATCHLINE

PROJECT CONSTRUCTION FEATURES

	TOP OF CUT SLOPE
	TOE OF FILL SLOPE
	STONE FILL
	BOTTOM OF DITCH ℄
	CULVERT PROPOSED
	STRUCTURE SUBSURFACE
PDF	PROJECT DEMARCATION FENCE
BF	BARRIER FENCE
	TREE PROTECTION ZONE (TPZ)
	STRIPING LINE REMOVAL
	SHEET PILES

CONVENTIONAL BOUNDARY SYMBOLOGY

BOUNDARY LINES

TOWN LINE	TOWN BOUNDARY LINE
COUNTY LINE	COUNTY BOUNDARY LINE
STATE LINE	STATE BOUNDARY LINE
	PROPOSED STATE R.O.W. (LIMITED ACCESS)
	PROPOSED STATE R.O.W.
	STATE ROW (LIMITED ACCESS)
	STATE ROW
	TOWN ROW
	PERMANENT EASEMENT LINE (P)
	TEMPORARY EASEMENT LINE (T)
	SURVEY LINE
P/L	PROPERTY LINE (P/L)
SR	SLOPE RIGHTS
6f	6F PROPERTY BOUNDARY
4f	4F PROPERTY BOUNDARY
HAZ	HAZARDOUS WASTE

EPSC LAYOUT PLAN SYMBOLOGY

EPSC MEASURES

	FILTER CURTAIN
	SILT FENCE
	SILT FENCE WOVEN WIRE
	CHECK DAM
	DISTURBED AREAS REQUIRING RE-VEGETATION
	EROSION MATTING

SEE EPSC DETAIL SHEETS FOR ADDITIONAL SYMBOLOGY

ENVIRONMENTAL RESOURCES

	WETLAND BOUNDARY
	RIPARIAN BUFFER ZONE
	WETLAND BUFFER ZONE
	SOIL TYPE BOUNDARY
T&E	THREATENED & ENDANGERED SPECIES
HAZ	HAZARDOUS WASTE AREA
AG	AGRICULTURAL LAND
HABITAT	FISH & WILDLIFE HABITAT
FLOOD PLAIN	FLOOD PLAIN
OHW	ORDINARY HIGH WATER (OHW)
	STORM WATER
	USDA FOREST SERVICE LANDS
	WILDLIFE HABITAT SUIT/CONN

ARCHEOLOGICAL & HISTORIC

ARCH	ARCHEOLOGICAL BOUNDARY
HISTORIC DIST	HISTORIC DISTRICT BOUNDARY
HISTORIC	HISTORIC AREA
H	HISTORIC STRUCTURE

CONVENTIONAL TOPOGRAPHIC SYMBOLOGY

EXISTING FEATURES

	ROAD EDGE PAVEMENT
	ROAD EDGE GRAVEL
	DRIVEWAY EDGE
	DITCH
	FOUNDATION
	FENCE (EXISTING)
	FENCE WOOD POST
	FENCE STEEL POST
	GARDEN
	ROAD GUARDRAIL
	RAILROAD TRACKS
	CULVERT (EXISTING)
	STONE WALL
	WALL
	WOOD LINE
	BRUSH LINE
	HEDGE
	BODY OF WATER EDGE
	LEDGE EXPOSED

PROJECT NAME: MONTPELIER
PROJECT NUMBER: BO 1446 (36)

FILE NAME: s13j082legend.dgn
PROJECT LEADER: C. W. CARLSON
DESIGNED BY: H. SALLS
CONVENTIONAL SYMBOLOGY LEGEND

PLOT DATE: 30-JUL-2015
DRAWN BY: M. LONGSTREET
CHECKED BY: H. SALLS
SHEET 9 OF 44

GPS CONTROL POINTS

HVCTRL #1

WRIGHT

NORTH = 664651.830
EAST = 1620232.490
ELEV. = 647.230

GENERAL LOCATION: MIDDLESEX, VT. THE MARK IS ACCESSED VIA A DIM TRAIL ON THE EASTERN EDGE OF THE PARKING AREA AT THE WRIGHTSVILLE DAM BOAT LAUNCH. THE MARK IS SET 15 CM BELOW GROUND SURFACE IN THE TOP OF A FENO STYLE MONUMENT. IT IS 18.7 M SOUTH-SOUTHWEST OF A 15 CM SWAMP MAPLE WITH TRIANGULAR BLAZE IN A CLUMP OF FOUR, 15.6 M NORTHWEST OF A 50 CM TWIN-TRUNKED MAPLE NEAR THE WATERS EDGE, 16.2 M SOUTH-SOUTHEAST OF A 15 CM TWIN-TRUNKED APPLE WITH TRIANGULAR BLAZE AND 0.2 M WEST OF A FIBERGLASS WITNESS POST.

HVCTRL #2

DAM AZ MK

NORTH = 659959.370
EAST = 1621056.200
ELEV. = 714.400

NO DESCRIPTIVE TEXT AVAILABLE

TRAVERSE TIES

HVCRTL #12

NORTH = 646444.675
EAST = 1621293.224
ELEV. = 539.636

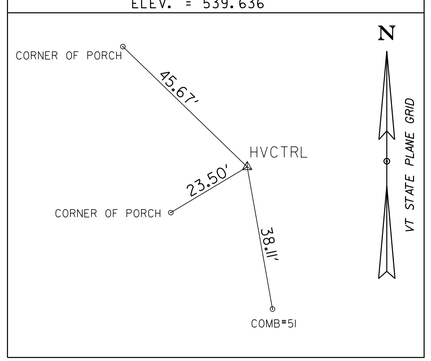

HVCTRL #13

NORTH = 645588.353
EAST = 1621661.275
ELEV. = 538.840

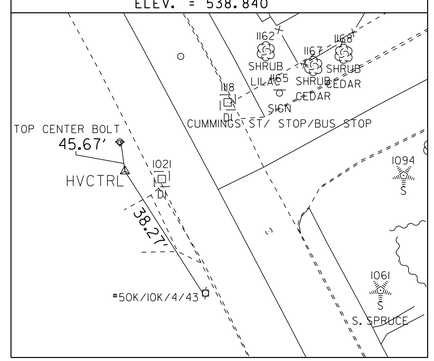

NORTH =
EAST =
ELEV. =

NORTH =
EAST =
ELEV. =

NORTH =
EAST =
ELEV. =

ALIGNMENT TIES

TH 130

	STATION	NORTHING	EASTING
POB	12+00.00	645589.5515	1621695.8756
PC	15+87.09	645766.7891	1622040.0036
PI	16+33.20	645787.9029	1622080.9986
PT	16+68.64	645833.9032	1622077.7819

Delta:	66°45'00.00"	Left
Degree of Curve:	81°51'04.01"	
Radius:	70.00	
Tangent:	46.11	
Length:	81.55	
External:	13.82	

PT	16+68.64	645833.9032	1622077.7819
POE	17+16.92	645882.0620	1622074.4143

DATUM

VERTICAL	NAVD 88
HORIZONTAL	NAD 83 (2011)
ADJUSTMENT	COMPASS

PROJECT NAME: MONTPELIER
PROJECT NUMBER: BO 1446 (36)

FILE NAME: x13j082ti.dgn
PROJECT LEADER: C. CARLSON
DESIGNED BY: H. SALLS
TIE SHEET

PLOT DATE: 30-JUL-2015
DRAWN BY: S. DONOVAN
CHECKED BY: P. BEYOR
SHEET 10 OF 44

REMOVAL AND DISPOSAL OF GUARDRAIL
TH30 STA 13+86.20 LT - STA 14+11.38 LT
TH30 STA 13+87.31 RT - STA 14+11.52 RT
TH30 STA 14+76.33 LT - STA 14+99.82 LT
TH30 STA 14+76.48 RT - STA 15+13.92 RT

VERTICAL GRANITE CURB
TH30 STA 12+50.00 LT - STA 12+64.21 LT
TH30 STA 12+50.00 RT - STA 12+82.00 RT
TH30 STA 13+00.00 RT - STA 13+09.00 RT
TH30 STA 13+20.00 RT - STA 13+92.00 RT

GUARDRAIL APPROACH SECTION TO CONCRETE BRIDGE RAILING, TL-3
TH30 STA 13+74.00 LT - STA 13+92.00 LT
TH30 STA 13+74.00 RT - STA 13+92.00 RT
TH30 STA 14+79.50 RT - STA 14+97.50 RT
TH30 STA 14+79.50 RT - STA 14+97.50 RT

HD STEEL BEAM GUARDRAIL, GALVANIZED
TH30 STA 13+62.75 LT - STA 13+74.00 LT
TH30 STA 13+61.51 RT - STA 13+74.00 RT
TH30 STA 14+97.50 LT - STA 15+21.25 LT
TH30 STA 14+97.50 RT - STA 15+08.69 RT

BRIDGE RAILING, GALVANIZED STEEL TUBING/CONCRETE COMBINATION
TH30 STA 13+92.00 LT - STA 14+79.50 LT
TH30 STA 13+92.00 RT - STA 14+79.50 RT

CHANGING ELEVATION OF DROP INLETS, CATCH BASINS, OR MANHOLES
TH30 STA 13+12.80 (23.6' RT)

PORTLAND CEMENT CONCRETE SIDEWALK, 5 INCH
TH30 STA 13+54.50 RT (4 FT x 3 FT)

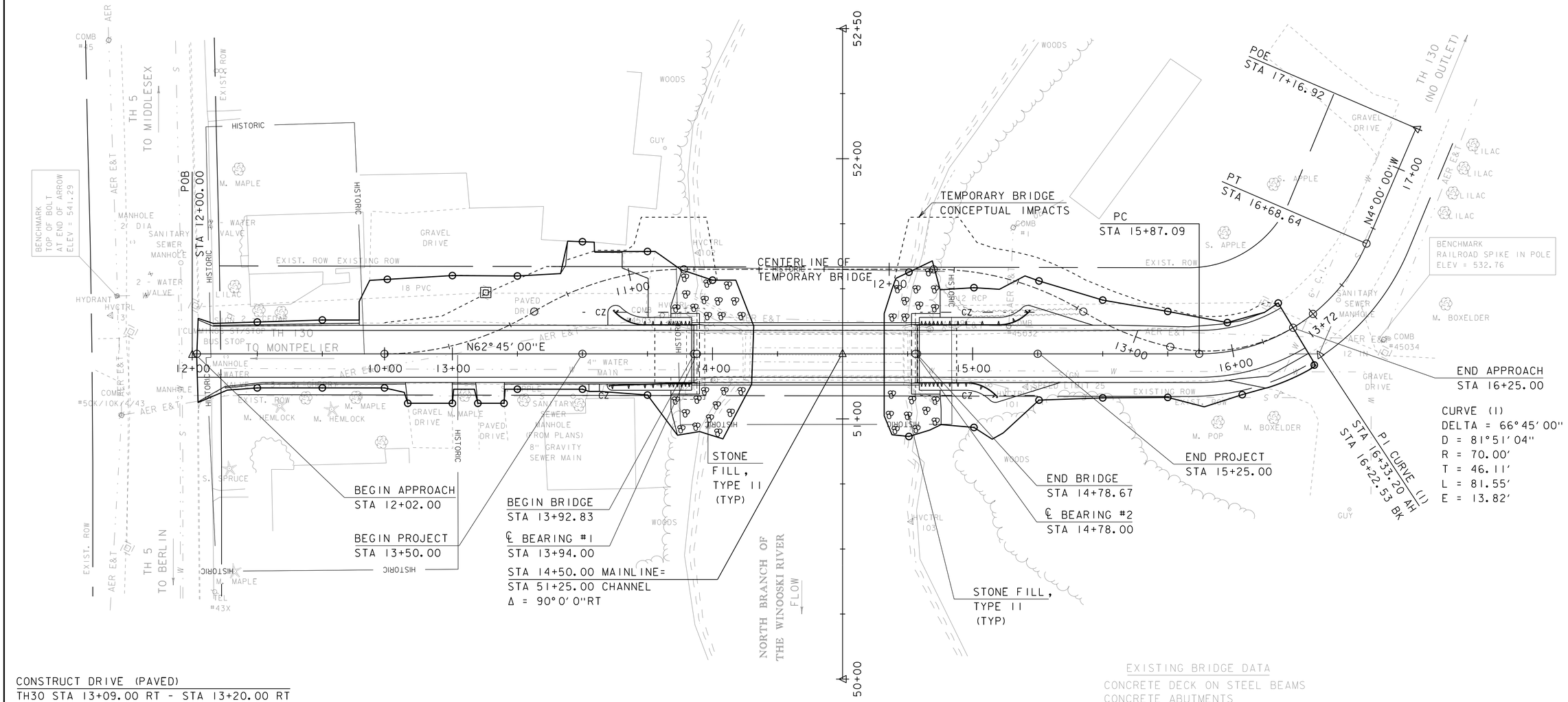

EXISTING BRIDGE DATA
CONCRETE DECK ON STEEL BEAMS
CONCRETE ABUTMENTS
CONCRETE BRIDGE RAIL
SINGLE SPAN = 59'
OVERALL LENGTH = 63'
OVERALL WIDTH = 19.33
VERTICAL CLEARANCE = 12'

SCALE 1" = 20'-0"
20 0 20

CONSTRUCT DRIVE (PAVED)
TH30 STA 13+09.00 RT - STA 13+20.00 RT
TH30 STA 12+50.00 LT - STA 13+75.00 LT

CONSTRUCT DRIVE (GRAVEL)
TH30 STA 12+82.00 RT - STA 13+00.00 RT
TH30 STA 16+00.00 RT - STA 16+25.00 RT

COLD PLANING, BITUMINOUS PAVEMENT
TH30 STA 12+02.00 - 13+00.00
TH30 STA 15+75.00 - 16+25.00

PROJECT NAME: MONTPELIER	
PROJECT NUMBER: BO 1446 (36)	
FILE NAME: sl3j082bdr.dgn	PLOT DATE: 30-JUL-2015
PROJECT LEADER: C. W. CARLSON	DRAWN BY: M. LONGSTREET
DESIGNED BY: H. SALLS	CHECKED BY: H. SALLS
LAYOUT SHEET	SHEET 11 OF 44

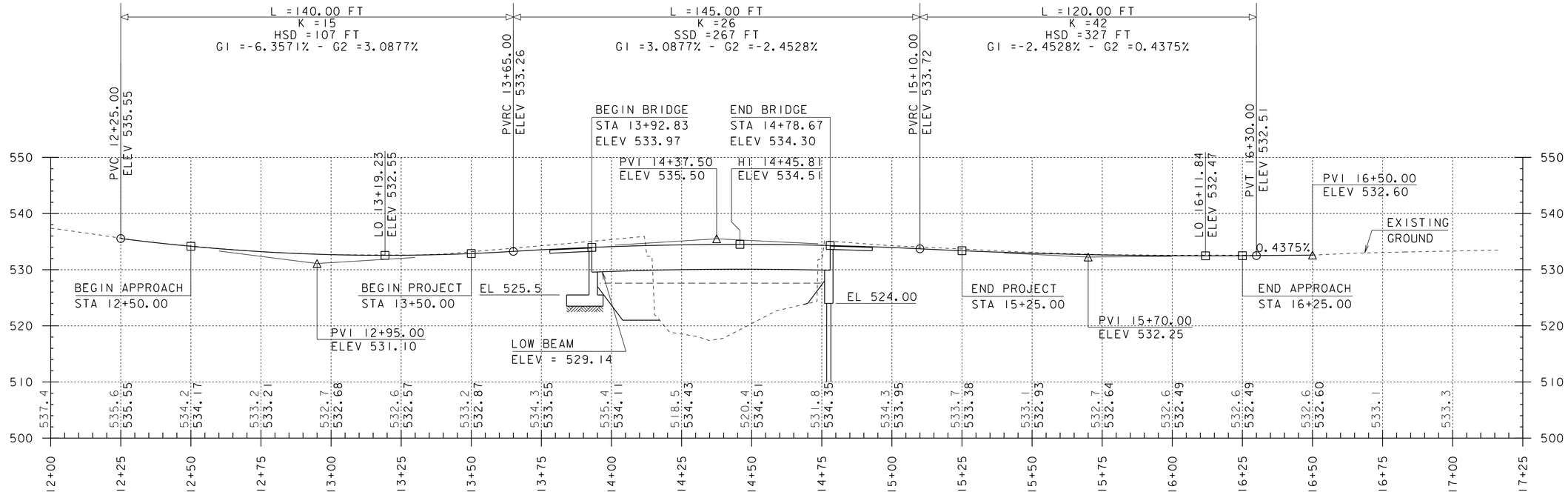

TH 130 PROPOSED PROFILE

SCALE: HORIZONTAL 1"=20'-0"
VERTICAL 1"=10'-0"

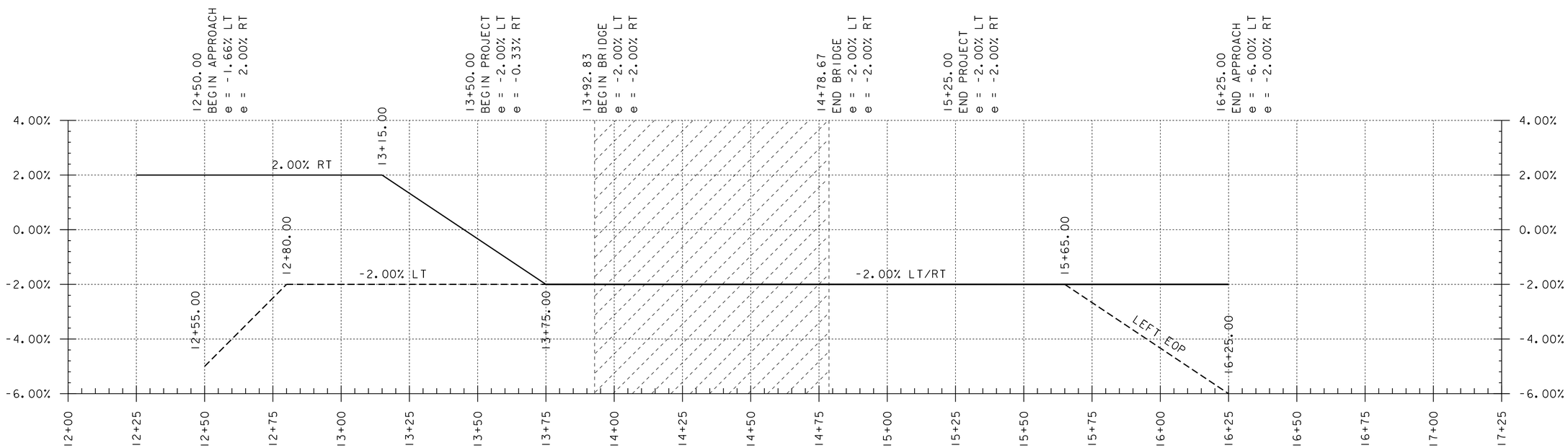

TH 130 PROPOSED BANKING

SCALE: HORIZONTAL 1"=20'-0"
VERTICAL 1"=1.00%

NOTE:

GRADES SHOWN TO THE NEAREST TENTH ARE EXISTING GROUND ALONG ℄

GRADES SHOWN TO THE NEAREST HUNDREDTH ARE FINISH GRADE ALONG ℄

PROJECT NAME: MONTPELIER	
PROJECT NUMBER: BO 1446 (36)	
FILE NAME: s13j082pro.dgn	PLOT DATE: 30-JUL-2015
PROJECT LEADER: C. W. CARLSON	DRAWN BY: M. LONGSTREET
DESIGNED BY: H. SALLS	CHECKED BY: H. SALLS
TH 130 PROFILE & BANKING DIAGRAM	SHEET 12 OF 44

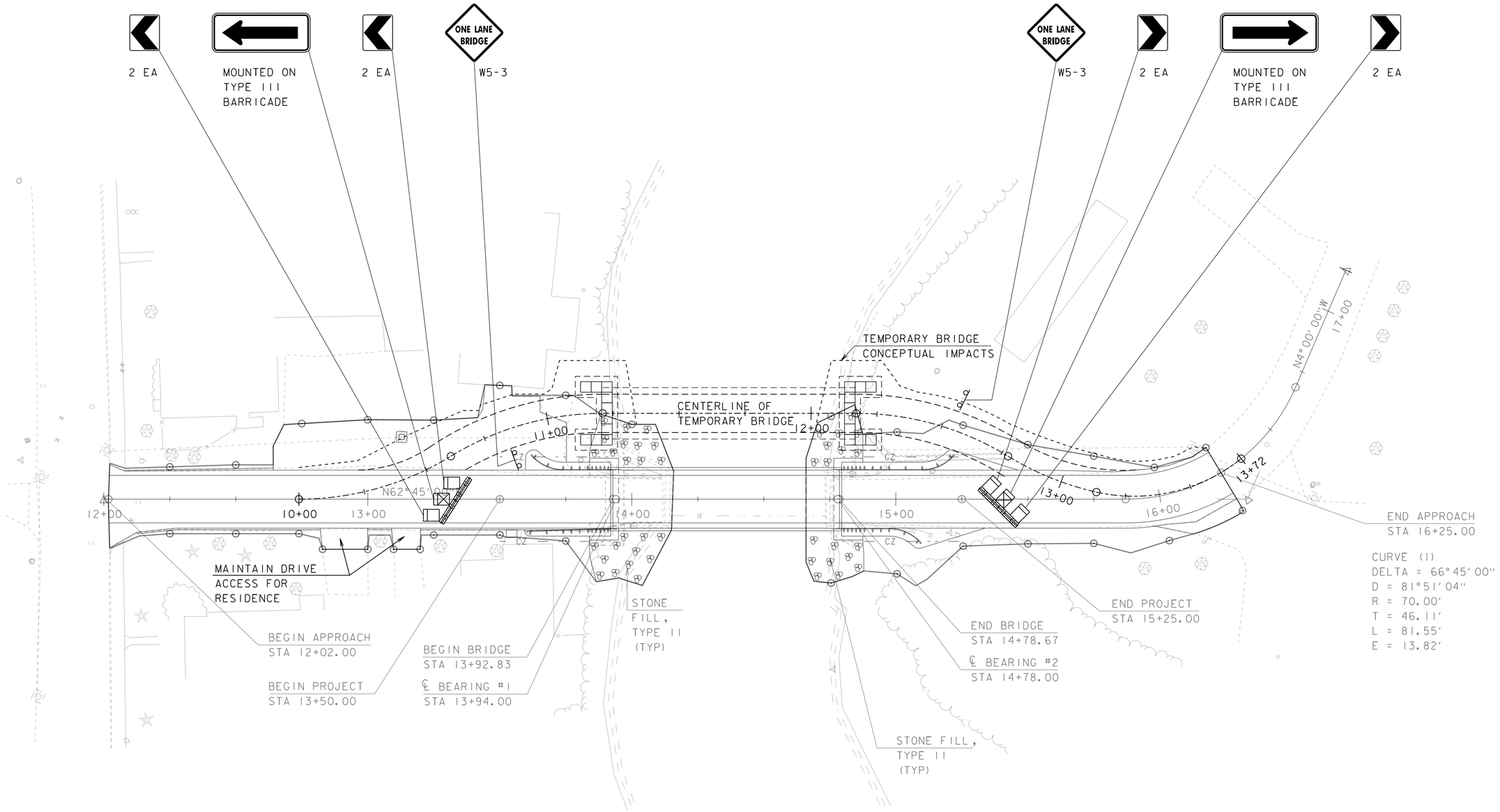

SCALE 1" = 20'-0"
20 0 20

PROJECT NAME: MONTPELIER	
PROJECT NUMBER: BO 1446 (36)	
FILE NAME: sl3j082detour.dgn	PLOT DATE: 30-JUL-2015
PROJECT LEADER: C. W. CARLSON	DRAWN BY: M. LONGSTREET
DESIGNED BY: H. SALLS	CHECKED BY: H. SALLS
TEMPORARY BRIDGE LAYOUT	SHEET 13 OF 44

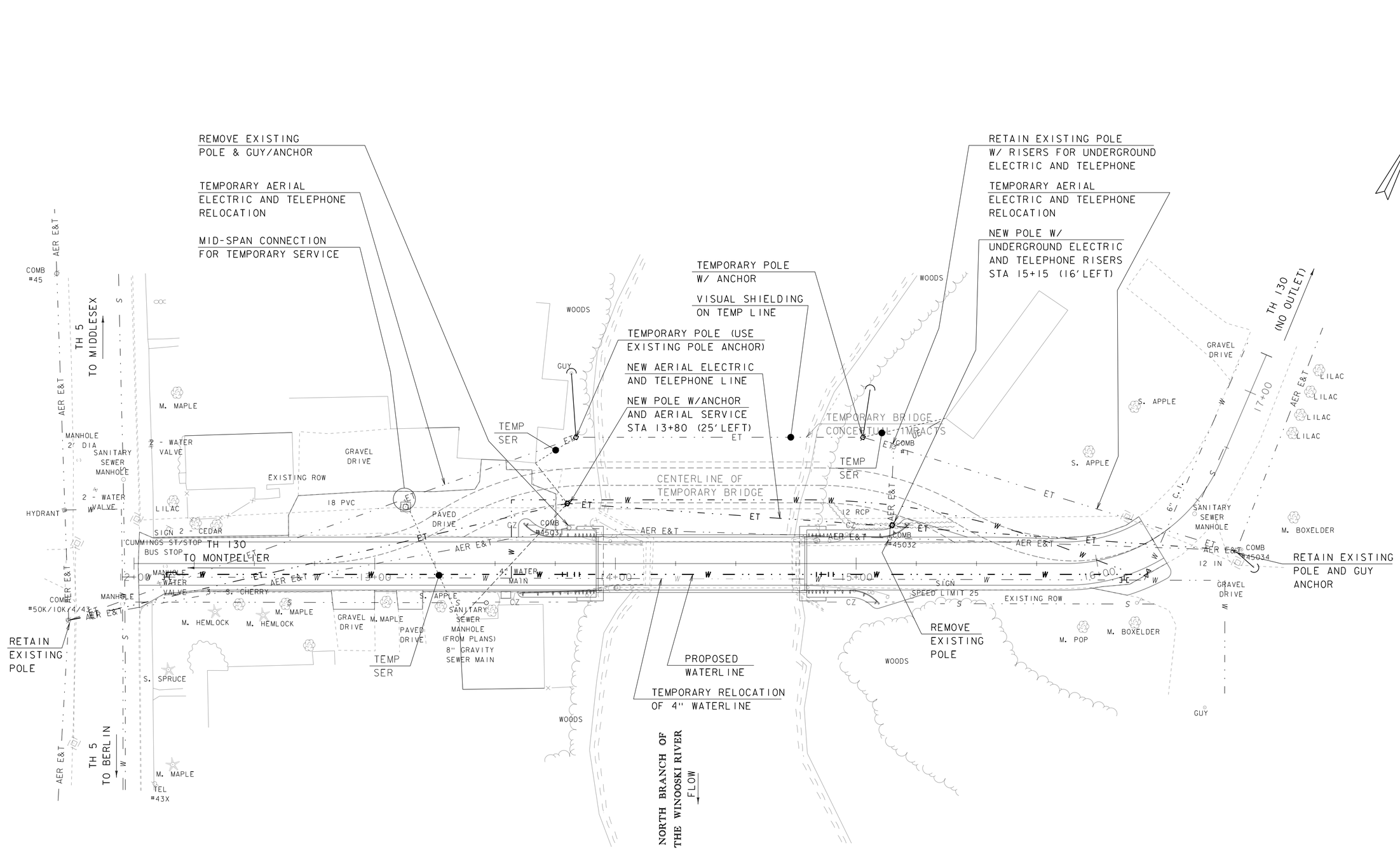

SCALE 1" = 20'-0"
20 0 20

PROJECT NAME: MONTPELIER	
PROJECT NUMBER: BO 1446 (36)	
FILE NAME: sl3j082bdr.dgn	PLOT DATE: 30-JUL-2015
PROJECT LEADER: C. W. CARLSON	DRAWN BY: M. LONGSTREET
DESIGNED BY: H. SALLS	CHECKED BY: H. SALLS
UTILITY LAYOUT	SHEET 14 OF 44

SOIL CLASSIFICATION

AASHTO

A1	Gravel and Sand
A3	Fine Sand
A2	Silty or Clayey Gravel and Sand
A4	Silty Soil - Low Compressibility
A5	Silty Soil - Highly Compressible
A6	Clayey Soil - Low Compressibility
A7	Clayey Soil - Highly Compressible

ROCK QUALITY DESIGNATION

R.Q.D. (%)	ROCK DESCRIPTION
<25	Very Poor
25 to 50	Poor
51 to 75	Fair
76 to 90	Good
>90	Excellent

SHEAR STRENGTH

UNDRAINED SHEAR STRENGTH IN P.S.F.	CONSISTENCY
<250	Very Soft
250-500	Soft
500-1000	Med. Stiff
1000-2000	Stiff
2000-4000	Very Stiff
>4000	Hard

CORRELATION GUIDE OF "N" TO DENSITY/CONSISTENCY

DENSITY (GRANULAR SOILS)

N	DESCRIPTIVE TERM
<5	Very Loose
5-10	Loose
11-24	Med. Dense
25-50	Dense
>50	Very Dense

CONSISTENCY (COHESIVE SOILS)

N	DESCRIPTIVE TERM
<2	Very Soft
2-4	Soft
5-8	Med. Stiff
9-15	Stiff
16-30	Very Stiff
31-60	Hard
>60	Very Hard

COMMONLY USED SYMBOLS

▼	Water Elevation
⊗	Standard Penetration Boring
⊕	Auger Boring
⊙	Rod Sounding
S	Sample
N	Standard Penetration Test Blow Count Per Foot For: 2" O.D. Sampler 1 3/8" I.D. Sampler Hammer Weight Of 140 Lbs. Hammer Fall Of 30"
VS	Field Vane Shear Test
US	Undisturbed Soil Sample
B	Blast
DC	Diamond Core
MD	Mud Drill
WA	Wash Ahead
HSA	Hollow Stem Auger
AX	Core Size 1 1/8"
BX	Core Size 1 5/8"
NX	Core Size 2 1/8"
M	Double Tube Core Barrel Used
LL	Liquid Limit
PL	Plastic Limit
PI	Plasticity Index
NP	Non Plastic
w	Moisture Content (Dry Wgt. Basis)
D	Dry
M	Moist
MTW	Moist To Wet
W	Wet
Sat	Saturated
Bo	Boulder
Gr	Gravel
Sa	Sand
Si	Silt
Cl	Clay
HP	Hardpan
Le	Ledge
NLTD	No Ledge To Depth
CNPF	Can Not Penetrate Further
TLOB	Top of Ledge Or Boulder
NR	No Recovery
Rec.	Recovery
%Rec.	Percent Recovery
ROD	Rock Quality Designation
CBR	California Bearing Ratio
<	Less Than
>	Greater Than
R	Refusal (N > 100)
VTSPG	NAD83 - See Note 7

COLOR

blk	Black	pnk	Pink
bl	Blue	pu	Purple
brn	Brown	rd	Red
dk	Dark	tn	Tan
gry	Gray	wh	White
gn	Green	yel	Yellow
lt	Light	mltc	Multicolored
or	Orange		

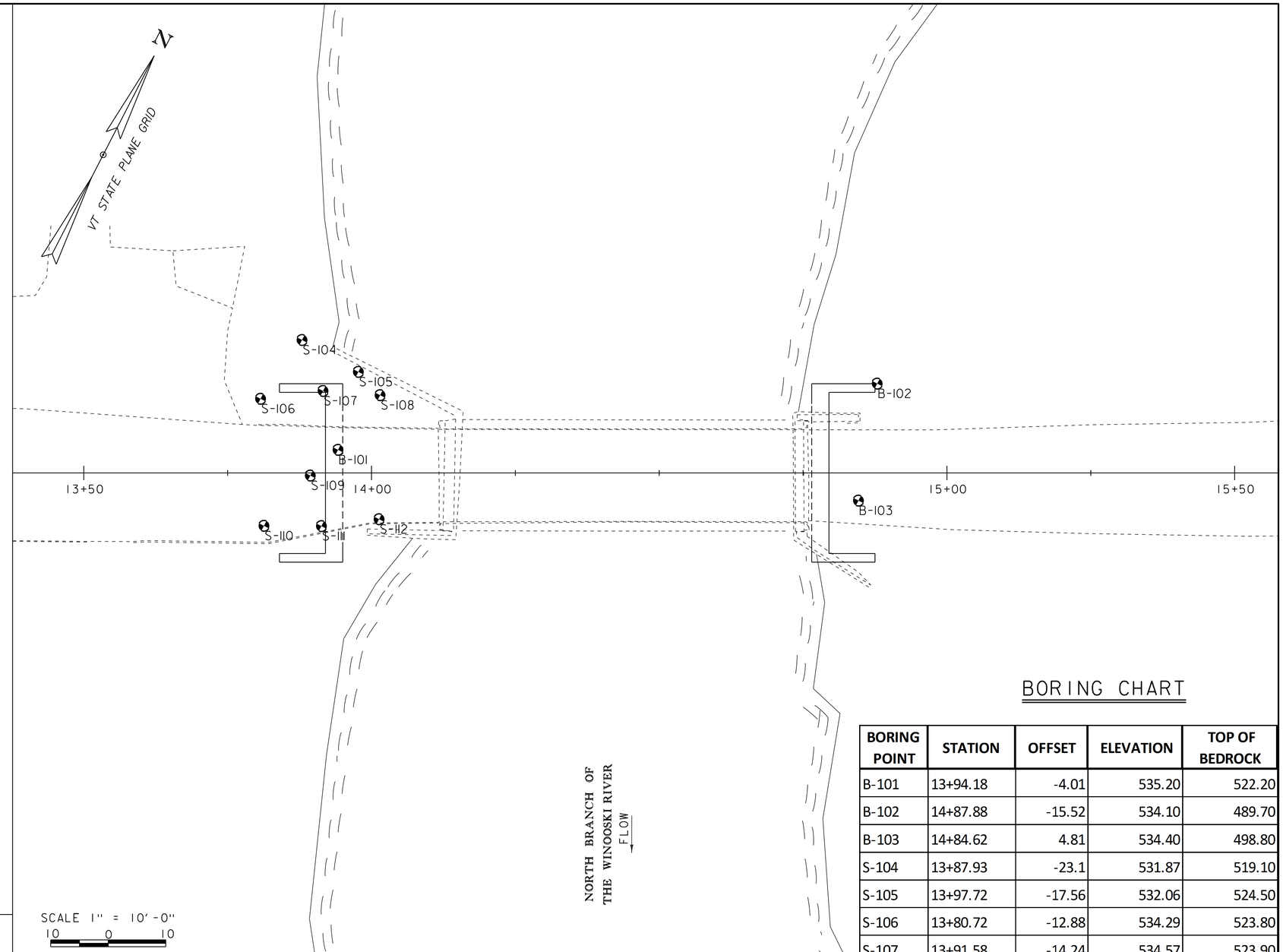

SCALE 1" = 10'-0"
10 0 10

BORING CHART

BORING POINT	STATION	OFFSET	ELEVATION	TOP OF BEDROCK
B-101	13+94.18	-4.01	535.20	522.20
B-102	14+87.88	-15.52	534.10	489.70
B-103	14+84.62	4.81	534.40	498.80
S-104	13+87.93	-23.1	531.87	519.10
S-105	13+97.72	-17.56	532.06	524.50
S-106	13+80.72	-12.88	534.29	523.80
S-107	13+91.58	-14.24	534.57	523.90
S-108	14+01.49	-13.51	534.27	529.20
S-109	13+89.36	0.46	534.91	524.20
S-110	13+81.31	9.19	534.55	526.20
S-111	13+91.30	9.24	534.91	525.70
S-112	14+01.32	8.04	535.39	529.80

DEFINITIONS (AASHTO)

BEDROCK (LEDGE) - Rock in its native location of indefinite thickness.

BOULDER - A rock fragment with an average dimension > 12 inches.

COBBLE - Rock fragments with an average dimension between 3 and 12 inches.

GRAVEL - Rounded particles of rock < 3" and > 0.0787" (#10 sieve).

SAND - Particles of rock < 0.0787" (#10 sieve) and > 0.0029" (#200 sieve).

SILT - Soil < 0.0029" (#200 sieve), non or slightly plastic and exhibits no strength when air-dried.

CLAY - Fine grained soil, exhibits plasticity when moist and considerable strength when air-dried.

VARVED - Alternate layers of silt and clay.

HARDPAN - Extremely dense soil, cemented layer, not softened when wet.

MUCK - Soft organic soil (containing > 10% organic material.

MOISTURE CONTENT - Weight of water divided by dry weight of soil.

FLOWING SAND - Granular soil so saturated (loose) that it flows into drill casing during extraction of wash rod.

STRIKE - Angle from magnetic north to line of intersection of bed with a horizontal plane.

DIP - Inclination of bed with a horizontal plane.

GENERAL NOTES

1. The subsurface explorations shown herein were made between 5-12-2014 and 5-20-2014 by the Agency.
2. Soil and rock classifications, properties and descriptions are based on engineering interpretation from available subsurface information by the Agency and may not necessarily reflect actual variations in subsurface conditions that may be encountered between individual boring or sample locations.
3. Observed water levels and/or conditions indicated are as recorded at the time of exploration and may vary according to the prevailing rainfall, methods of exploration and other factors.
4. Engineering judgment was exercised in preparing the subsurface information presented herein. Analysis and interpretation of subsurface data was performed and interpreted for Agency design and estimating purposes. Presentation of the information in the Contract is intended to provide the Contractor access to the same data available to the Agency. The subsurface information is presented in good faith and is not intended as a substitute for personal investigation, independent interpretation, independent analysis or judgment by the Contractor.
5. Pictorial structure details shown on the boring plan layout or soils profile are for illustrative purposes only and may not accurately portray final contract details.
6. Terminology used on boring logs to describe the hardness, degree of weathering, and spacing of fractures, joints and other discontinuities in the bedrock is defined in the AASHTO Manual on Subsurface Investigations, 1988.
7. Northing and Easting coordinates are shown in Vermont State Plane Grid North American Datum 1983 in meters and survey feet.

PROJECT NAME: MONTPELIER
PROJECT NUMBER: BO 1446 (36)

FILE NAME: s13j082boring.dgn
PROJECT LEADER: C. W. CARLSON
DESIGNED BY: H. SALLS
BORING INFORMATION

PLOT DATE: 30-JUL-2015
DRAWN BY: M. LONGSTREET
CHECKED BY: H. SALLS
SHEET 15 OF 44

STATE OF VERMONT
AGENCY OF TRANSPORTATION
MATERIALS & RESEARCH SECTION
SUBSURFACE INFORMATION

BORING LOG

MONTPELIER
BO 1446(36)
TH-130 BR-13

Boring No.: **B-101**
Page No.: 1 of 1
Pin No.: 13J082
Checked By: MLM

Boring Crew: DAIGNEAULT, NIETO, MEYERS
Date Started: 5/12/14 Date Finished: 5/12/14
VTSPG NAD83: N 645682.03 ft E 1621866.67 ft
Station: 13+94 Offset: -3.50
Ground Elevation: 535.2 ft

	Casing	Sampler
Type:	WB	SS
I.D.:	4 in	1.5 in
Hammer Wt:	N.A.	140 lb.
Hammer Fall:	N.A.	30 in.
Hammer/Rod Type:	Auto/AWJ	
Rig:	CME 45C SKID	C. = 1.33

Groundwater Observations

Date	Depth (ft)	Notes
05/12/14	1.1	While drilling.

TOP OF FTG
EL = 525.5

Depth (ft)	Strata (1)	CLASSIFICATION OF MATERIALS (Description)	Run (Dip deg.)	Core Rec. % (RQD %)	Drill Rate minutes/ft	Blows/6" (N Value)	Moisture Content %	Gravel %	Sand %	Fines %
		Asphalt Pavement, 0.0 ft - 0.48 ft								
		A-1-b, SaGr, Lt/gry, Moist, Rec. = 0.7 ft, Lab Note: Various types of Broken Rock were within sample. Roller coned and cleaned out casing.				11-12-23-11 (35)	11.0	46.3	37.2	16.5
		A-2-4, SiGrSa, brn, MTW, Rec. = 0.4 ft, Lab Note: Broken Rock was within sample. Roller coned and cleaned out casing.				1-4-5-4 (9)	16.4	32.4	39.5	28.1
5		A-4, SiSa, brn, MTW, Rec. = 1.2 ft, Roller coned and cleaned out casing.				6-1-4-1 (5)	25.7	10.3	45.1	44.6
		A-2-4, SiSa, brn, MTW, Rec. = 1.6 ft				4-2-1-1 (3)	26.6	9.4	60.0	30.6
10		Lab Note, Mostly flat brittle fragments of broken rock (Slate)., gry-brn, Moist, Rec. = 0.9 ft				2-18-12-R@3.5" (30)	13.8	50.2	30.7	19.1
		Field Note:, NXDC								
		Field Note:, Mostly flat brittle fragments of broken rock (Slate)., gry, Moist, Rec. = 0.2 ft				R@2.5" (R)	9.2	64.5	17.8	17.7
		Field Note:, NXDC								
15		13.0 ft - 18.0 ft, Dark-gray to silvery-gray, lustrous Phyllite & Slate, Moderately hard, Unweathered, Fair rock, NXMDC, RMR = 59	1 (70)	98 (34)	6 5 10 5 7	Top of Bedrock @ 13.0 ft				
20		18.0 ft - 23.0 ft, Dark-gray to silvery-gray, lustrous Phyllite & Slate, Moderately hard, Unweathered, Good rock, NXMDC, RMR = 64	2 (70)	100 (54)	10 5 5 8 12					
		Hole stopped @ 23.0 ft								
25		Remarks: Hole collapsed at 4.6 ft.								

Notes:
1. Stratification lines represent approximate boundary between material types. Transition may be gradual.
2. N Values have not been corrected for hammer energy. C is the hammer energy correction factor.
3. Water level readings have been made at times and under conditions stated. Fluctuations may occur due to other factors than those present at the time measurements were made.

STATE OF VERMONT
AGENCY OF TRANSPORTATION
MATERIALS & RESEARCH SECTION
SUBSURFACE INFORMATION

BORING LOG

MONTPELIER
BO 1446(36)
TH-130 BR-13

Boring No.: **B-102**
Page No.: 1 of 2
Pin No.: 13J082
Checked By: MLM

Boring Crew: DAIGNEAULT, NIETO
Date Started: 5/13/14 Date Finished: 5/14/14
VTSPG NAD83: N 645735.16 ft E 1621944.70 ft
Station: 14+88 Offset: -15.20
Ground Elevation: 534.1 ft

	Casing	Sampler
Type:	WB	SS
I.D.:	4 in	1.5 in
Hammer Wt:	N.A.	140 lb.
Hammer Fall:	N.A.	30 in.
Hammer/Rod Type:	Auto/AWJ	
Rig:	CME 45C SKID	C. = 1.33

Groundwater Observations

Date	Depth (ft)	Notes
05/14/14	10.1	AM

BOT OF CAP
EL = 524.00

Depth (ft)	Strata (1)	CLASSIFICATION OF MATERIALS (Description)	Run (Dip deg.)	Core Rec. % (RQD %)	Drill Rate minutes/ft	Blows/6" (N Value)	Moisture Content %	Gravel %	Sand %	Fines %
		A-2-4, SiGrSa with roots & wood pieces, brn, Moist, Rec. = 1.0 ft, Lab Note: Broken Rock (Slate) fragments were within sample.				1-2-2-3 (4)	12.8	31.6	41.1	27.3
		A-1-a, SaGr, brn, Moist, Rec. = 1.1 ft, Lab Note: Broken Rock was within sample.				3-4-4-6 (8)	6.6	50.9	35.4	13.7
5		A-1-b, SiSaGr, Lt/brn, Moist, Rec. = 0.8 ft, Lab Note: Broken Rock was within sample.				6-4-3-4 (7)	12.3	42.2	36.9	20.9
		A-2-4, SiGrSa, Lt/brn, MTW, Rec. = 0.7 ft, NXDC, Cleaned out casing. Lab Note: Orange clay tile pieces & wood were within sample.				6-2-2-2 (4)	22.9	35.8	37.8	26.4
		A-1-b, SiSaGr, brn, MTW, Rec. = 0.5 ft, Roller coned ahead. Lab Note: Wood pieces were within sample.				4-21-7-2 (28)	37.1	41.1	38.6	20.3
10		Lab Note, Wood core (solid 9 inches), Lt/brn, MTW, Rec. = 0.75 ft, Roller coned and cleaned out casing.				2-5-4-4 (9)	47.8	4.3	45.0	50.7
		A-4, SaSi, Lt/gry, MTW, Rec. = 0.65 ft, Lab Note: Small pieces of wood were within sample.								
		A-4, SiSa, gry, MTW, Rec. = 0.2 ft, Roller coned and cleaned out casing. Lab Note: Wood pieces were within sample.				5-4-3-3 (7)	42.2		62.2	37.8
15		Field Note:, No Recovery				6-3-4-7 (7)				
		A-1-a, SaGr, gry, MTW, Rec. = 0.7 ft, Roller coned and cleaned out casing. Lab Note: Wood pieces were within sample.				6-2-4-3 (6)	17.0	58.9	32.5	8.6
		Field Note:, No Recovery, Roller coned and cleaned out casing.				3-2-2-4 (4)				
20		Field Note:, No Recovery				12-8-8-8 (16)				
25		A-2-4, SiGrSa, gry, Moist, Rec. = 0.5 ft, Lab Note: Broken Rock was within sample.				7-8-5-4 (13)	16.1	30.2	48.9	20.9

Notes:
1. Stratification lines represent approximate boundary between material types. Transition may be gradual.
2. N Values have not been corrected for hammer energy. C is the hammer energy correction factor.
3. Water level readings have been made at times and under conditions stated. Fluctuations may occur due to other factors than those present at the time measurements were made.

PROJECT NAME: MONTPELIER
PROJECT NUMBER: BO 1446 (36)

FILE NAME: s13j082boring.dgn
PROJECT LEADER: C. W. CARLSON
DESIGNED BY: H. SALLS
BORING LOGS SHEET 1

PLOT DATE: 30-JUL-2015
DRAWN BY: M. LONGSTREET
CHECKED BY: H. SALLS
SHEET 16 OF 44

STATE OF VERMONT
AGENCY OF TRANSPORTATION
MATERIALS & RESEARCH SECTION
SUBSURFACE INFORMATION

BORING LOG

MONTPELIER
BO 1446(36)
TH-130 BR-13

Boring No.: **B-102**
Page No.: 2 of 2
Pin No.: 13J082
Checked By: MLM

Boring Crew: DAIGNEAULT, NIETO
Date Started: 5/13/14 Date Finished: 5/14/14
VTSPG NAD83: N 645735.16 ft E 1621944.70 ft
Station: 14+88 Offset: -15.20
Ground Elevation: 534.1 ft

	Casing	Sampler
Type:	WB	SS
I.D.:	4 in	1.5 in
Hammer Wt:	N.A.	140 lb.
Hammer Fall:	N.A.	30 in.
Hammer/Rod Type:	Auto/AWJ	
Rig:	CME 45C SKID	C. = 1.33

Groundwater Observations

Date	Depth (ft)	Notes
05/14/14	10.1	AM

Depth (ft)	Strata (1)	CLASSIFICATION OF MATERIALS (Description)	Run (Dip deg.)	Core Rec. % (RQD %)	Drill Rate minutes/ft	Blows/6" (N Value)	Moisture Content %	Gravel %	Sand %	Fines %
		A-3, Sa, gry, Moist, Rec. = 0.6 ft				2-4-6-5 (10)	21.5	12.2	78.0	9.8
35		A-2-4, SiSa, gry, Moist, Rec. = 1.0 ft				4-3-4-6 (7)	22.0	0.1	70.2	29.7
40		Field Note:, Roller coned and cleaned out casing. Lab Note: Wood pieces were within sample. A-3, Sa, gry, Moist, Rec. = 0.5 ft, Lab Note: Broken Rock was within sample.				3-4-5-6 (9)	19.2	7.7	82.5	9.8
		Field Note:, Broken & weathered rock								
PILE TIP EL = 489.70' 45		44.4 ft - 49.4 ft, Dark-gray to silvery-gray, lustrous Phyllite & Slate, Moderately hard, Unweathered, Good rock, NXMDC, RMR = 68	1 (60)	100 (76)	4 5 5 6 6	Top of Bedrock @ 44.4 ft				
50		49.4 ft - 54.4 ft, Dark-gray to silvery-gray, lustrous Phyllite & Slate, with quartz veins. Moderately hard, Unweathered, Fair rock, NXMDC, RMR = 59	2 (60)	100 (46)	5 6 6 6 5					
55		Hole stopped @ 54.4 ft								

Remarks:
Hole collapsed at 9.7 ft.

Notes:
1. Stratification lines represent approximate boundary between material types. Transition may be gradual.
2. N Values have not been corrected for hammer energy. C is the hammer energy correction factor.
3. Water level readings have been made at times and under conditions stated. Fluctuations may occur due to other factors than those present at the time measurements were made.

STATE OF VERMONT
AGENCY OF TRANSPORTATION
MATERIALS & RESEARCH SECTION
SUBSURFACE INFORMATION

BORING LOG

MONTPELIER
BO 1446(36)
TH-130 BR-13

Boring No.: **B-103**
Page No.: 1 of 1
Pin No.: 13J082
Checked By: MLM

Boring Crew: DAIGNEAULT, NIETO, HOOK
Date Started: 5/20/14 Date Finished: 5/20/14
VTSPG NAD83: N 645715.60 ft E 1621951.11 ft
Station: 14+85 Offset: 5.10
Ground Elevation: 532.4 ft

	Casing	Sampler
Type:	WB	SS
I.D.:	4 in	1.5 in
Hammer Wt:	N.A.	140 lb.
Hammer Fall:	N.A.	30 in.
Hammer/Rod Type:	Auto/AWJ	
Rig:	CME 45C SKID	C. = 1.33

Groundwater Observations

Date	Depth (ft)	Notes
05/20/14	6.1	After drilling.

Depth (ft)	Strata (1)	CLASSIFICATION OF MATERIALS (Description)	Run (Dip deg.)	Core Rec. % (RQD %)	Drill Rate minutes/ft	Blows/6" (N Value)	Moisture Content %	Gravel %	Sand %	Fines %
		Visual Description:, Recycled Asphalt Pavement, blk, Dry, Rec. = 0.8 ft				5-8-2-3 (10)	8.1			
		A-2-4, GrSa, Dk/brn, Moist, Rec. = 1.2 ft				3-3-3-2 (6)	13.4	24.9	55.2	19.9
		A-1-b, SaGr, Dk/brn, Moist, Rec. = 0.7 ft				3-4-4-8 (8)	10.6	45.3	40.1	14.6
		Visual Description:, Broken Rock with sand and asphalt pavement, Dk/brn, Moist, Rec. = 0.5 ft				2-2-3-2 (5)	5.2			
BOT OF CAP EL = 524.00		A-2-4, GrSa, brn, Moist, Rec. = 0.5 ft				2-R@3.5" (R)	18.2	29.2	54.3	16.5
10		Field Note:, Concrete Footing/Granite Fill								
		Visual Description:, Broken Rock with silty sand, gry, Moist, Rec. = 0.3 ft				R@3.5" (R)	12.0			
		Field Note:, NXDC								
		A-2-4, GrSa, Dk/gry, Moist, Rec. = 0.6 ft				5-3-1-1 (4)	23.1	35.8	48.8	15.4
20		A-1-b, GrSa, brn, MTW, Rec. = 0.6 ft				3-3-5-6 (8)	16.1	39.0	47.8	13.2
		Field Note:, NXDC								
		A-2-4, Sa, Lt/gry, Moist, Rec. = 1.0 ft				5-3-3-4 (6)	19.9	14.5	71.9	13.6
30		Field Note:, No Recovery				4-3-6-9 (9)				
		A-2-4, Sa, gry, Moist, Rec. = 0.6 ft				2-4-8-8 (12)	23.9		87.3	12.7
PILE TIP EL = 494.80' 40		37.6 ft - 42.6 ft, Dark-gray to silvery-gray, lustrous Phyllite & Slate, with quartz vein from 39.4' to 40.8'. Moderately hard, Unweathered, Fair rock, NXMDC, RMR = 59	1 (60)	100 (48)	5 6 7 9 15	Top of Bedrock @ 37.6 ft				
		42.6 ft - 45.9 ft, Dark-gray to silvery-gray, lustrous Phyllite & Slate, Moderately hard, Unweathered, Good rock, NXMDC, RMR = 64	2 (80)	97 (61)	5 6 29 17					
		Hole stopped @ 45.9 ft								

Remarks:
Hole collapsed at 8.0 ft.

Notes:
1. Stratification lines represent approximate boundary between material types. Transition may be gradual.
2. N Values have not been corrected for hammer energy. C is the hammer energy correction factor.
3. Water level readings have been made at times and under conditions stated. Fluctuations may occur due to other factors than those present at the time measurements were made.

PROJECT NAME: MONTPELIER
PROJECT NUMBER: BO 1446 (36)

FILE NAME: s13j082boring.dgn
PROJECT LEADER: C. W. CARLSON
DESIGNED BY: H. SALLS
BORING LOGS SHEET 2

PLOT DATE: 30-JUL-2015
DRAWN BY: M. LONGSTREET
CHECKED BY: H. SALLS
SHEET 17 OF 44

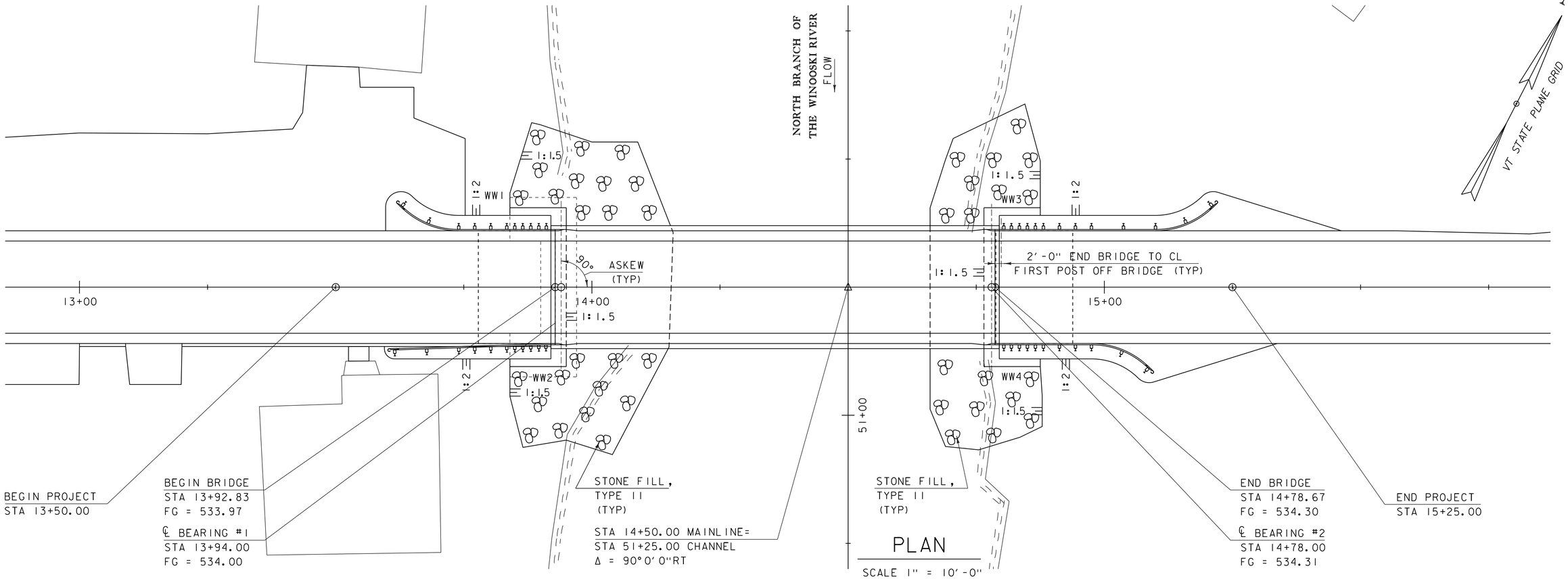

ELEVATION

SCALE 1" = 10'-0"
10 0 10

PROJECT NAME: MONTPELIER	
PROJECT NUMBER: BO 1446 (36)	
FILE NAME: s13j082pe.dgn	PLOT DATE: 30-JUL-2015
PROJECT LEADER: C. W. CARLSON	DRAWN BY: M. LONGSTREET
DESIGNED BY: H. SALLS	CHECKED BY: H. SALLS
PLAN AND ELEVATION	SHEET 18 OF 44

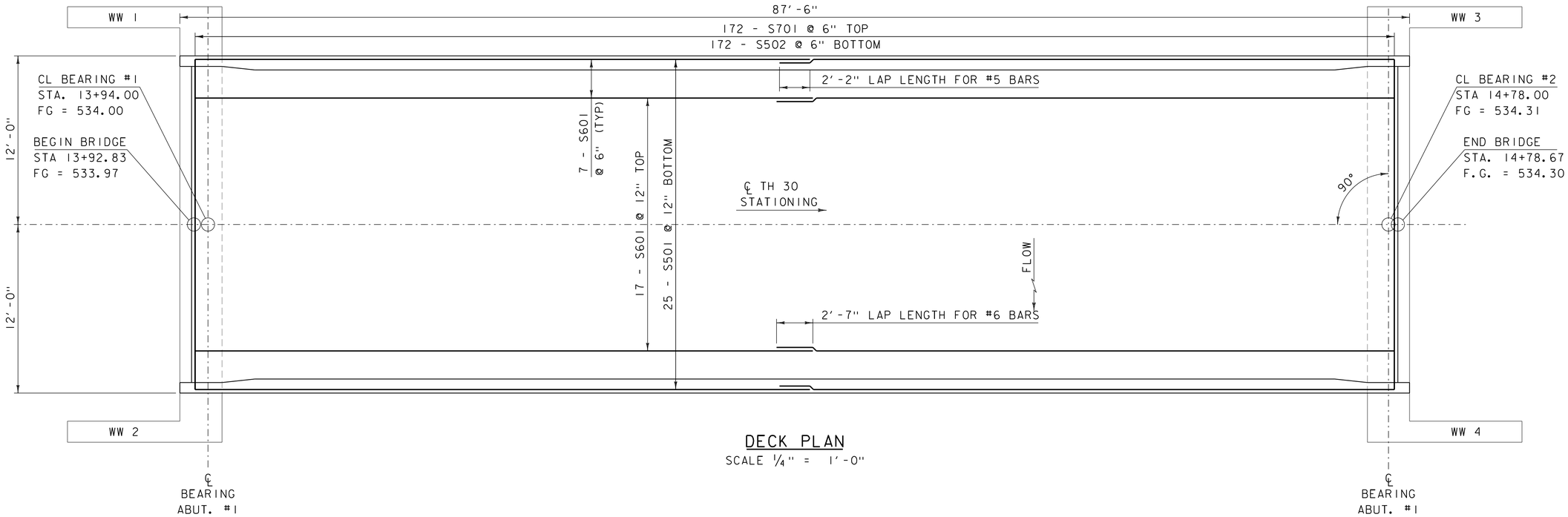

DECK PLAN

SCALE 1/4" = 1'-0"

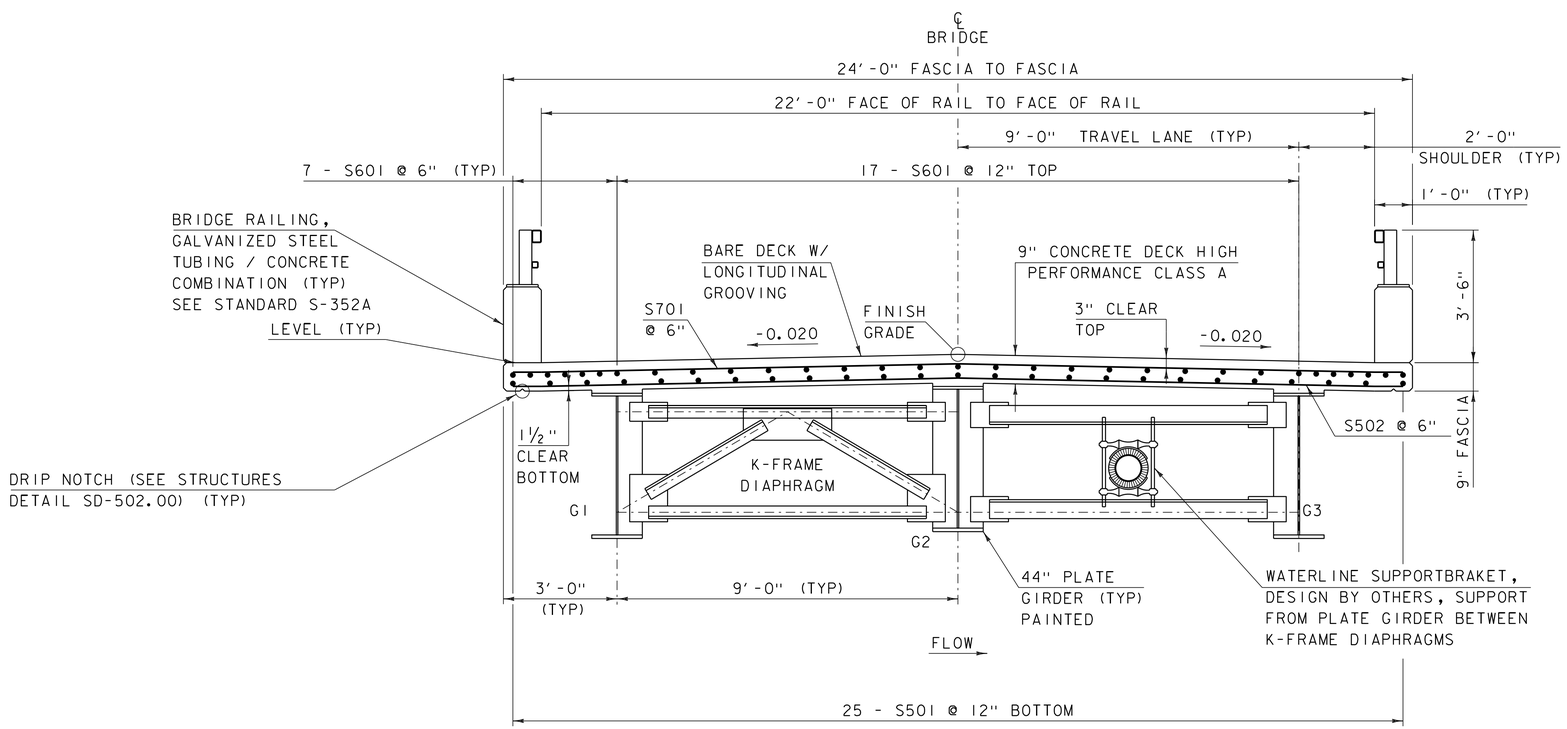

BRIDGE TYPICAL SECTION

SCALE 1/2" = 1'-0"

NOTE:

NF = NEAR FACE
FF = FAR FACE
EF = EACH FACE
▲ = CUT TO FIT IN FIELD
3" CLEAR, UNLESS OTHERWISE SPECIFIED ON THE PLANS.
2'-2" BAR LAP UNLESS OTHERWISE SPECIFIED ON THE PLANS.

PROJECT NAME: MONTPELIER	
PROJECT NUMBER: BO 1446 (36)	
FILE NAME: sl3j082sup.dgn	PLOT DATE: 30-JUL-2015
PROJECT LEADER: C. W. CARLSON	DRAWN BY: R. PELLETT
DESIGNED BY: H. SALLS	CHECKED BY: H. SALLS
BRIDGE DECK PLAN & TYPICAL	SHEET 19 OF 44

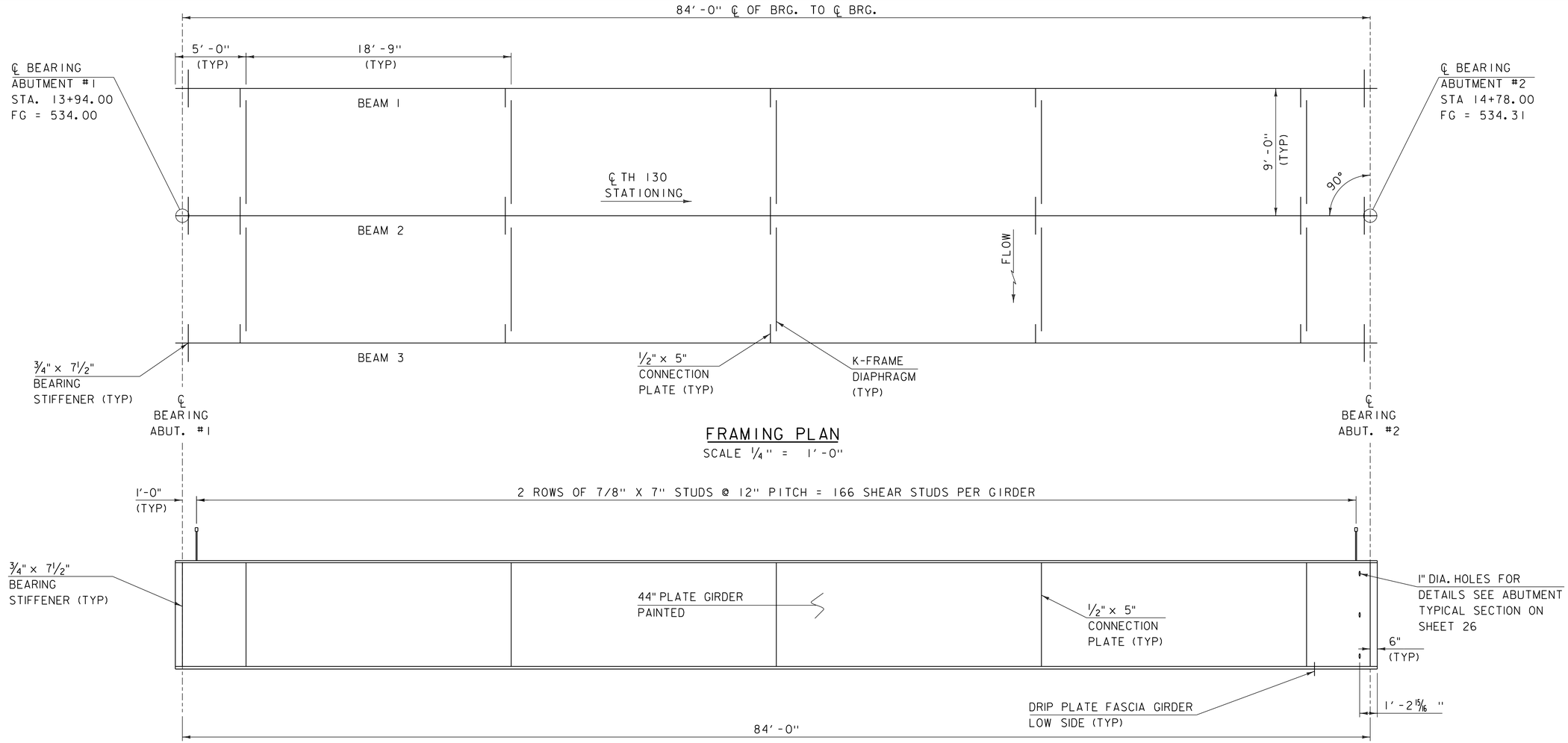

FRAMING PLAN

SCALE 1/4" = 1'-0"

GIRDER ELEVATION

HORIZONTAL SCALE 1/4"=1'-0"
VERTICAL SCALE 1"=1'-0"

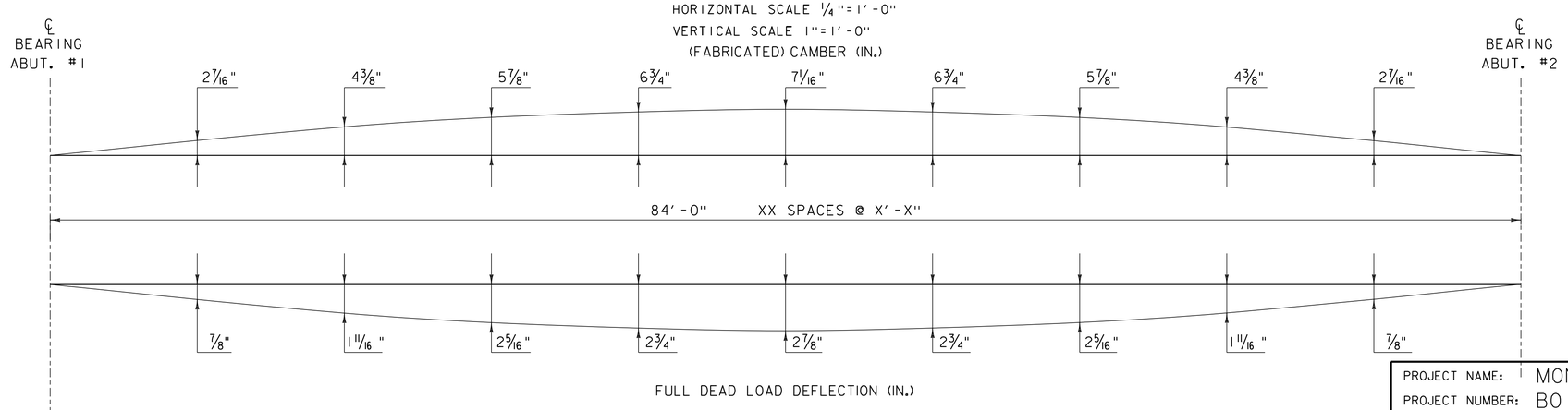

CAMBER AND DEAD LOAD DEFLECTION

HORIZONTAL SCALE 1/4"=1'-0"
VERTICAL SCALE 2"=1'-0"

PROJECT NAME: MONTPELIER	
PROJECT NUMBER: BO 1446 (36)	
FILE NAME: s13j082sup.dgn	PLOT DATE: 30-JUL-2015
PROJECT LEADER: C. W. CARLSON	DRAWN BY: R. PELLETT
DESIGNED BY: F. BARROWS	CHECKED BY: F. BARROWS
FRAMING PLAN	SHEET 20 OF 44

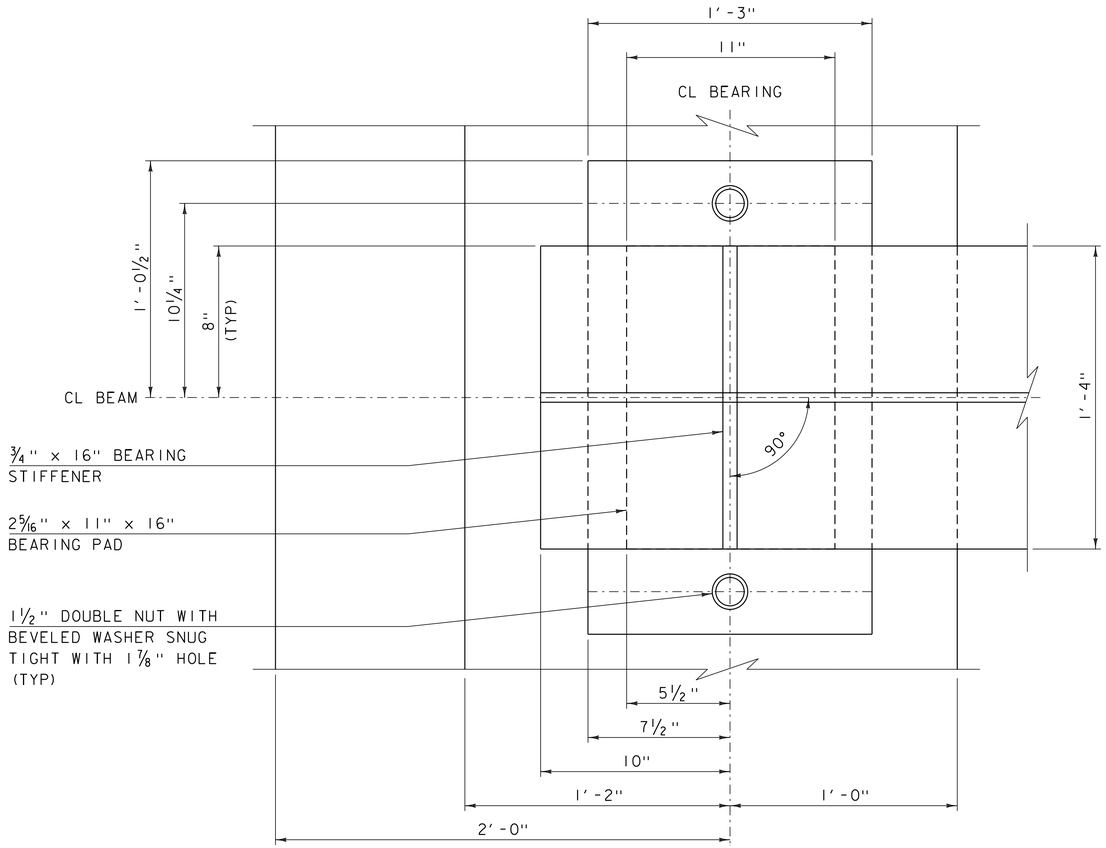

PLAN
SCALE: 3" = 1'-0"

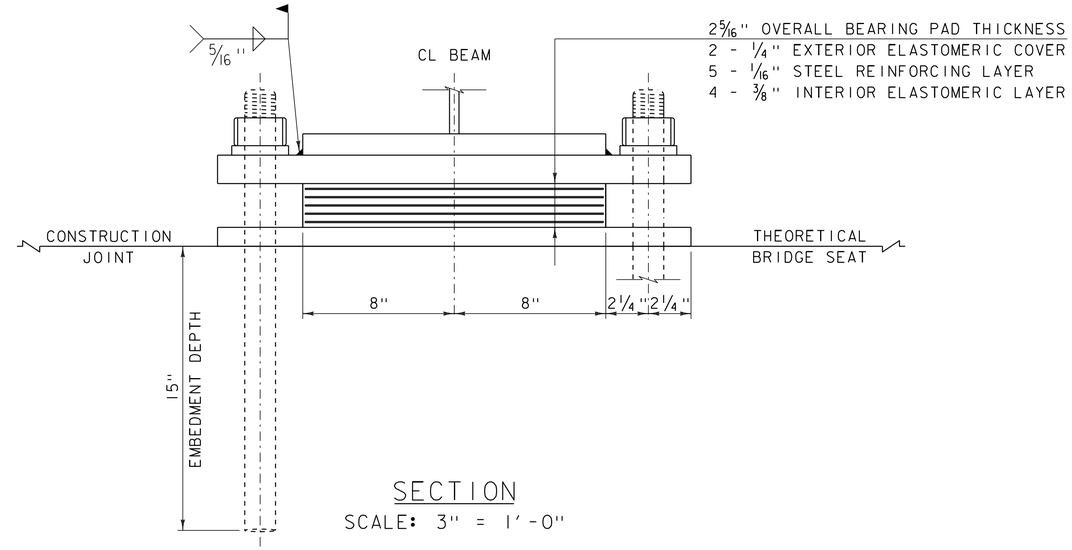

SECTION
SCALE: 3" = 1'-0"

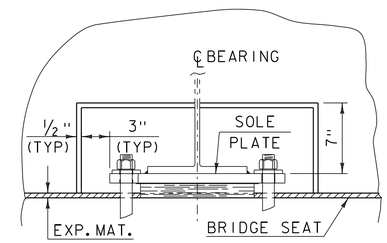

VIEW A - A

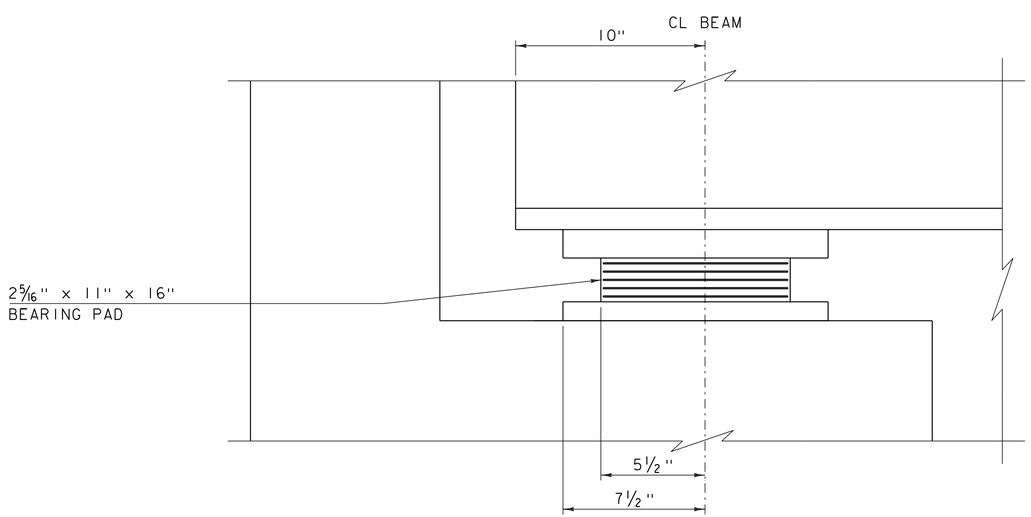

ELEVATION
SCALE: 3" = 1'-0"

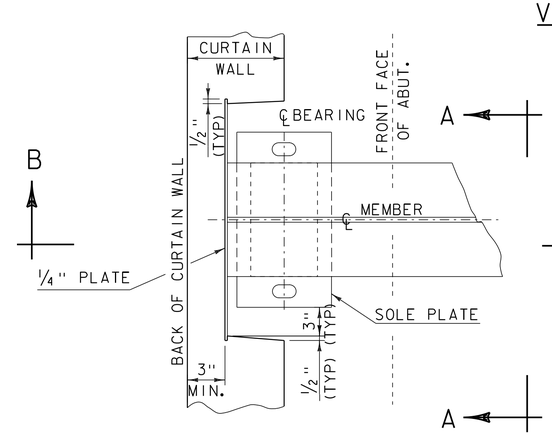

PLAN CONCRETE CURTAIN WALL AROUND BEARING DEVICE

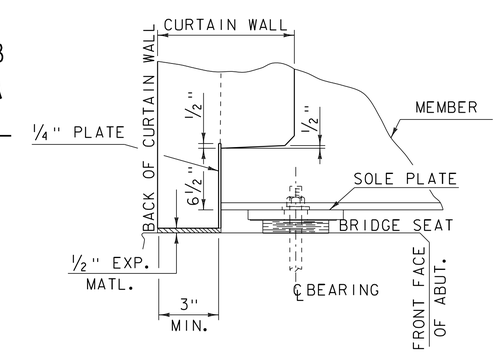

SECTION B-B

PROJECT NAME: MONTPELIER	
PROJECT NUMBER: BO 1446 (36)	
FILE NAME: s13j082sup.dgn	PLOT DATE: 30-JUL-2015
PROJECT LEADER: C. W. CARLSON	DRAWN BY: R. PELLETT
DESIGNED BY: F. BARROWS	CHECKED BY: F. BARROWS
BEARING DETAILS ABUTMENT #1	SHEET 21 OF 44

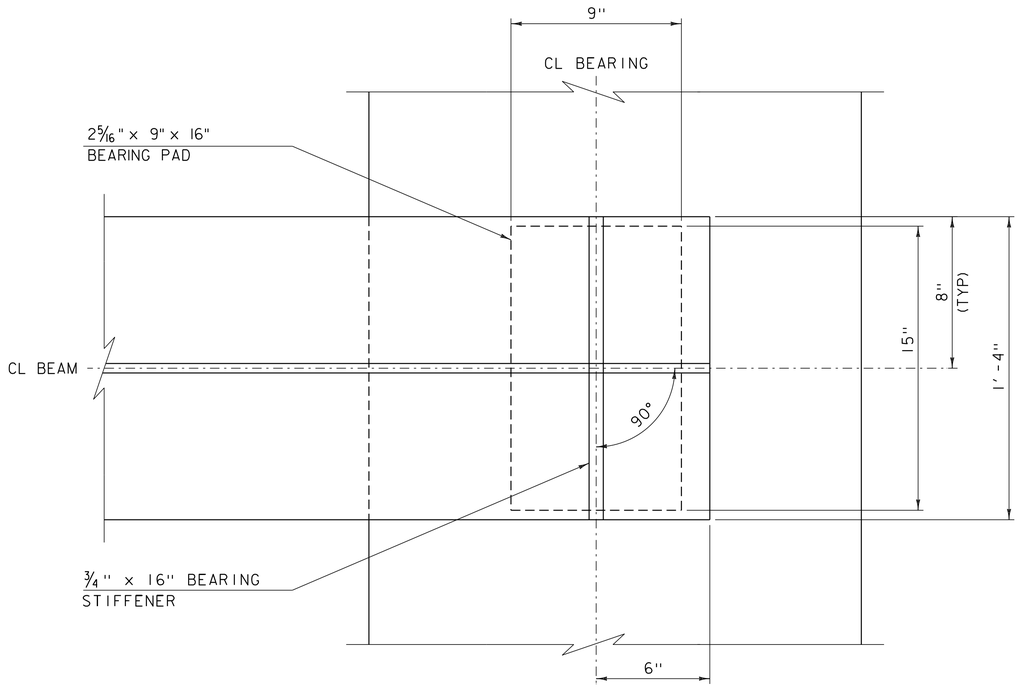

BEARING PLAN

SCALE: 3" = 1'-0"

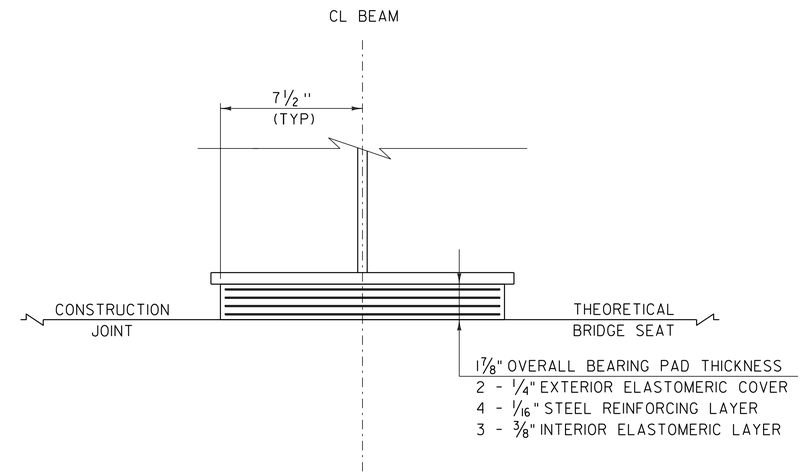

BEARING SECTION

SCALE: 3" = 1'-0"

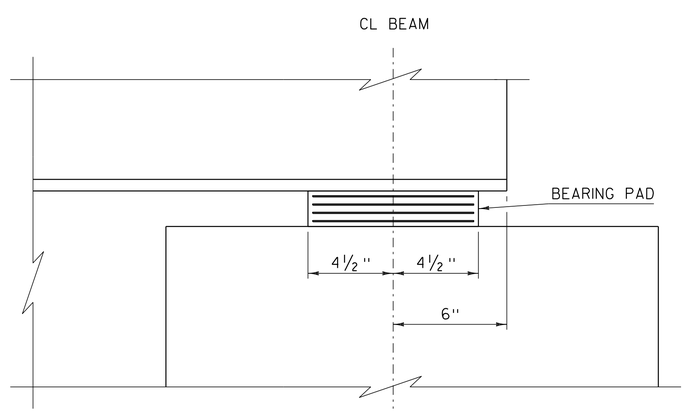

BEARING ELEVATION

SCALE: 3" = 1'-0"

BEARING DEVICE NOTES

1. BEARINGS SHALL BE PAID FOR UNDER ITEM 531.17 "BEARING DEVICE ASSEMBLY, STEEL REINFORCED ELASTOMERIC PAD" AND SHALL CONFORM TO APPLICABLE SUBSECTIONS OF SECTIONS 531 AND 731.

2. ALL REINFORCEMENT BETWEEN LAYERS OF ELASTOMERIC SHALL BE STEEL MEETING ASTM A36. ALL INTERNAL STEEL PLATES SHALL BE SAND BLASTED AND FREE OF COATINGS, RUST, AND MILL SCALE. THE PLATES SHALL BE FREE OF SHARP EDGES AND BURRS.

3. STEEL REINFORCED ELASTOMERIC PAD BEARINGS SHALL HAVE A MINIMUM OF 1/8" EDGE SEAL OF ELASTOMER INTEGRAL WITH THE BEARING OVER ALL INTERNAL PLATES.

PROJECT NAME: MONTPELIER	
PROJECT NUMBER: BO 1446 (36)	
FILE NAME: s13j082sup.dgn	PLOT DATE: 30-JUL-2015
PROJECT LEADER: C. W. CARLSON	DRAWN BY: R. PELLETT
DESIGNED BY: F. BARROWS	CHECKED BY: F. BARROWS
BEARING DETAILS ABUTMENT #2	SHEET 22 OF 44

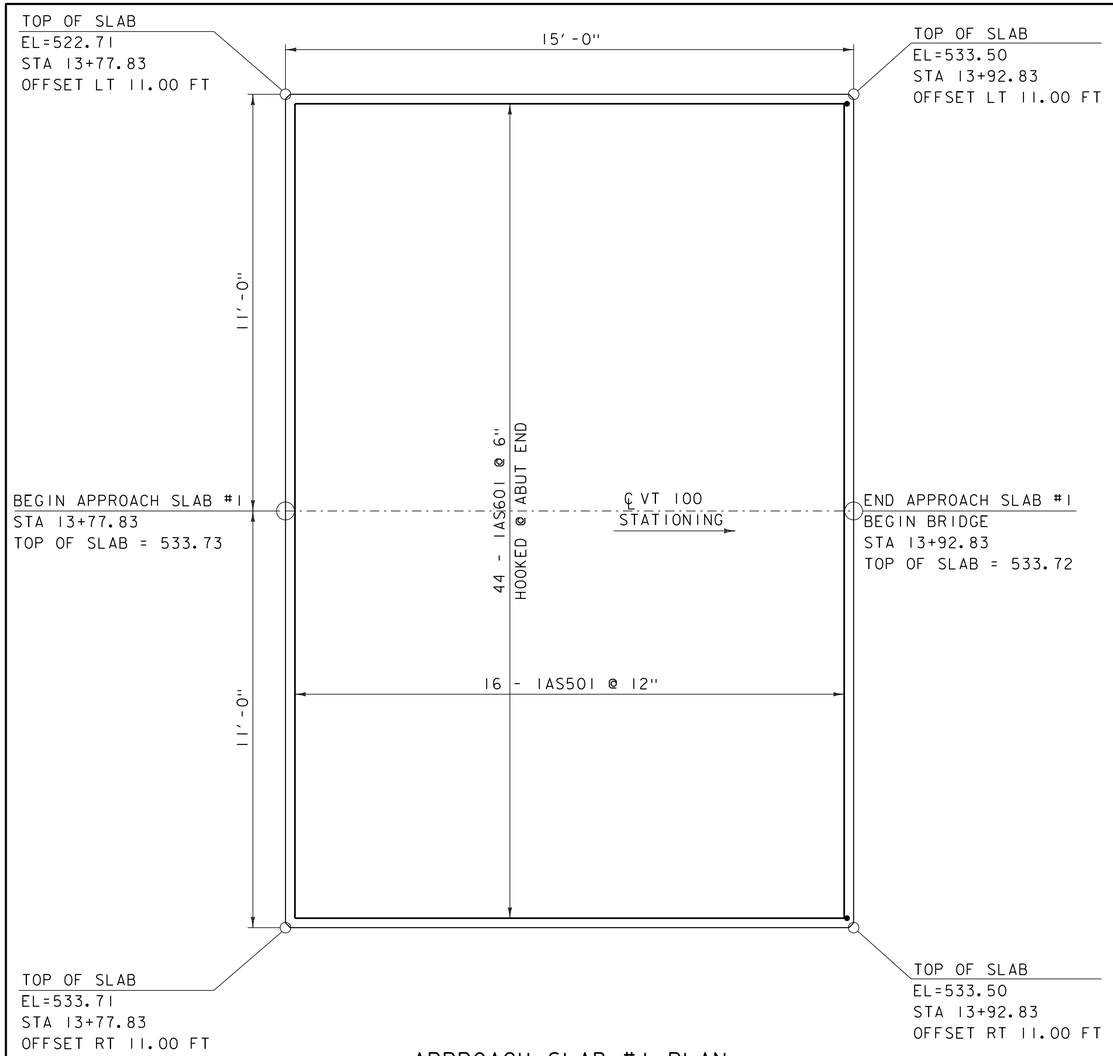

APPROACH SLAB #1 PLAN

SCALE 1/4" = 1'-0"

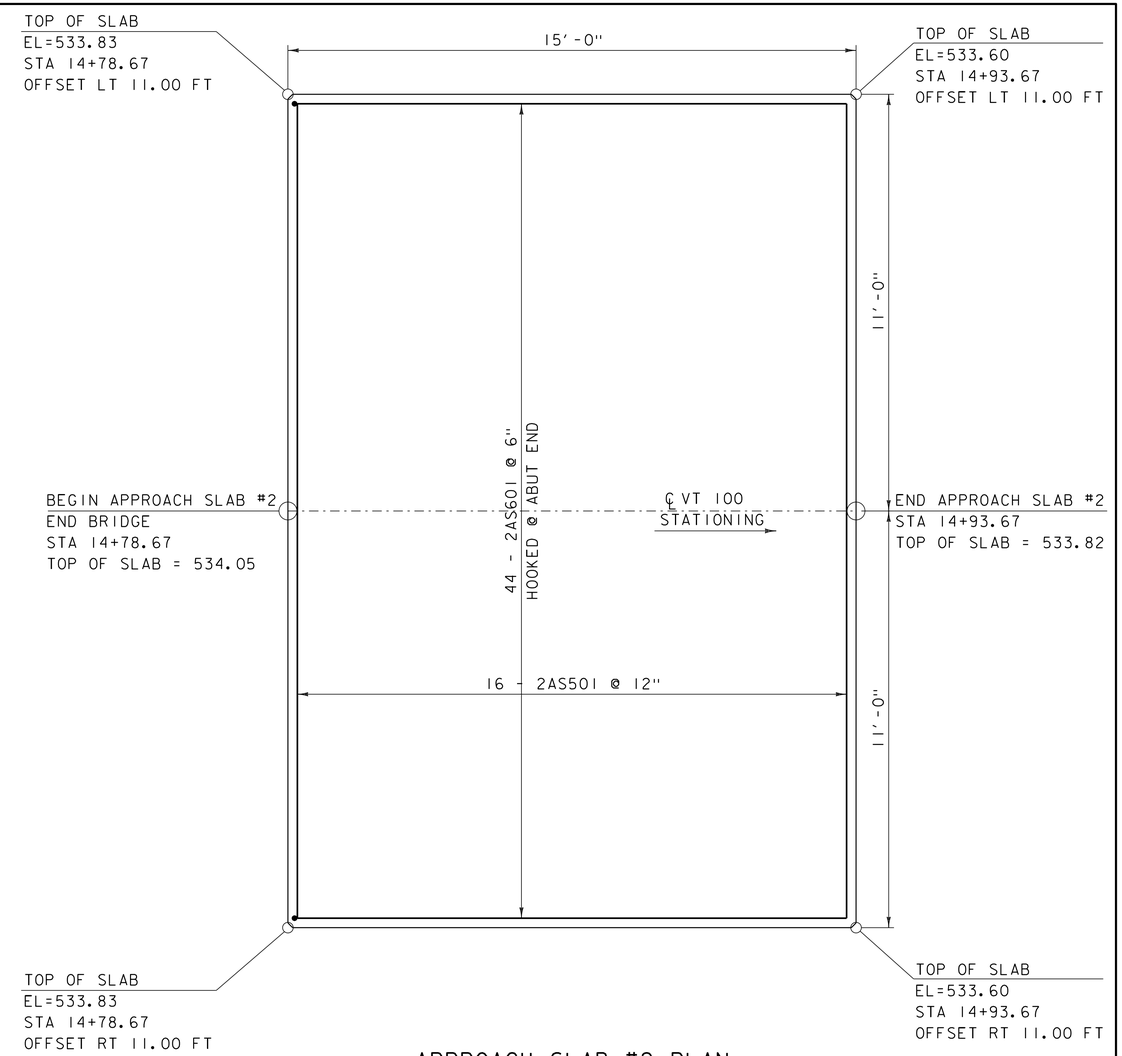

APPROACH SLAB #2 PLAN

SCALE 1/4" = 1'-0"

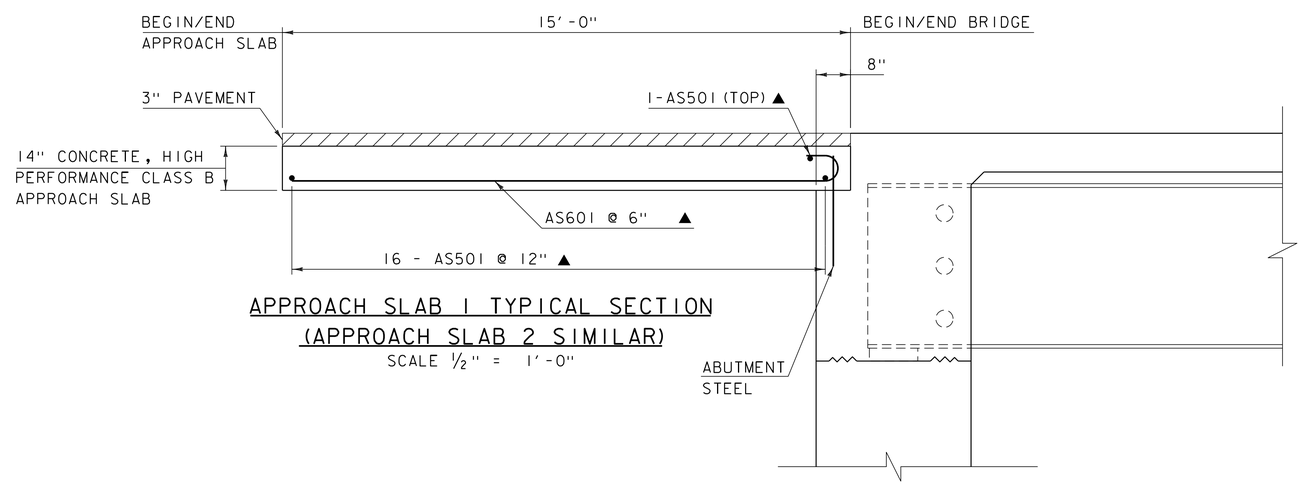

APPROACH SLAB 1 TYPICAL SECTION

(APPROACH SLAB 2 SIMILAR)

SCALE 1/2" = 1'-0"

NOTE:

NF = NEAR FACE
FF = FAR FACE
EF = EACH FACE
▲ = CUT TO FIT IN FIELD
3" CLEAR, UNLESS OTHERWISE SPECIFIED ON THE PLANS.
2'-2" BAR LAP UNLESS OTHERWISE SPECIFIED ON THE PLANS.

PROJECT NAME: MONTPELIER	
PROJECT NUMBER: BO 1446 (36)	
FILE NAME: sl3j082sup.dgn	PLOT DATE: 30-JUL-2015
PROJECT LEADER: C. W. CARLSON	DRAWN BY: R. PELLETT
DESIGNED BY: R. PELLETT	CHECKED BY: F. BARROWS
APPROACH SLAB DETAILS	SHEET 23 OF 44

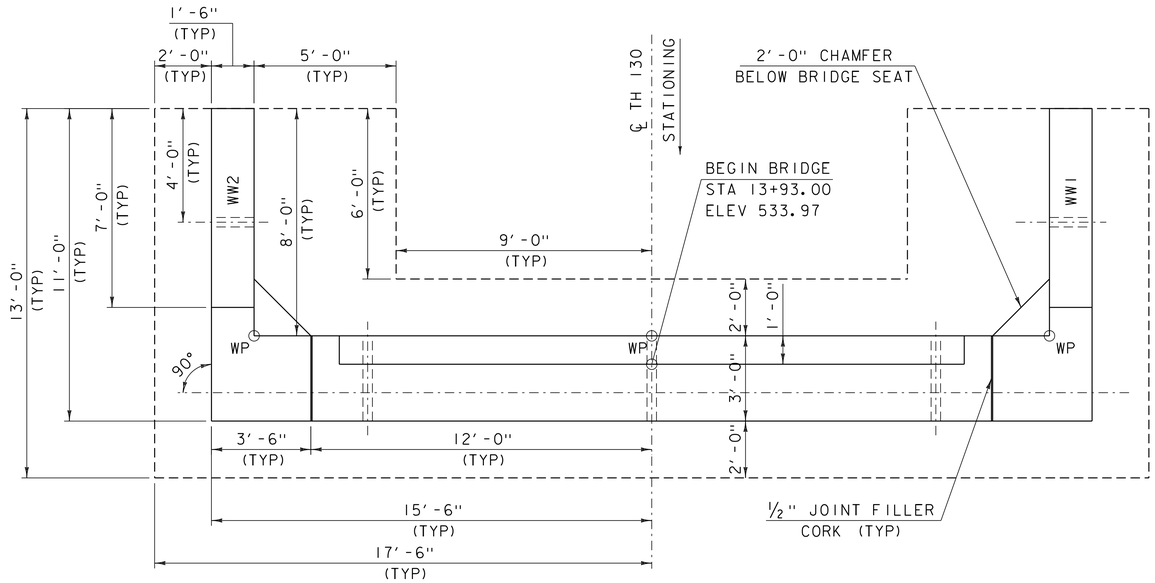

ABUTMENT 1 PLAN

SCALE ⅜" = 1'-0"

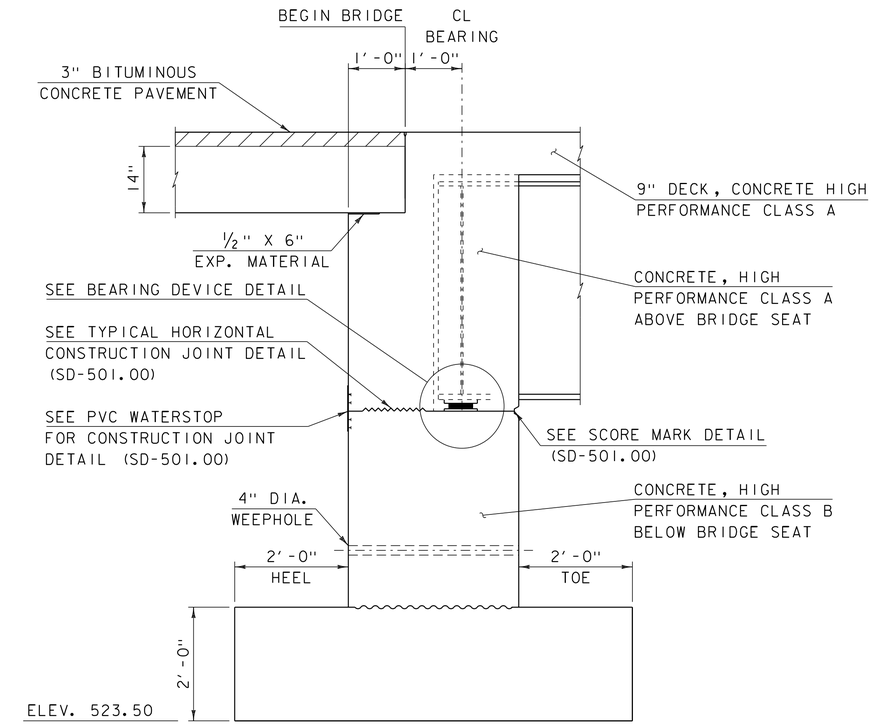

ABUTMENT 1 TYPICAL SECTION

SCALE ¾" = 1'-0"

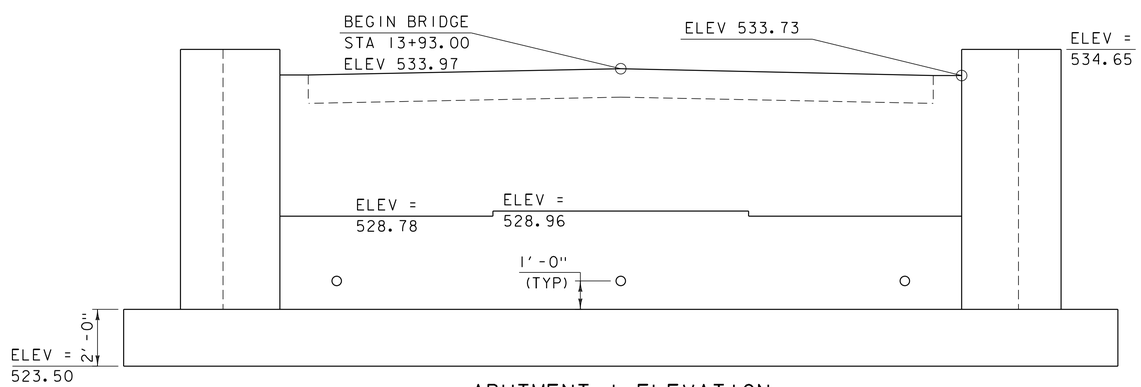

ABUTMENT 1 ELEVATION

SCALE ⅜" = 1'-0"

PROJECT NAME: MONTPELIER	
PROJECT NUMBER: BO 1446 (36)	
FILE NAME: s13j082sub.dgn	PLOT DATE: 30-JUL-2015
PROJECT LEADER: C. W. CARLSON	DRAWN BY: R. PELLETT
DESIGNED BY: F. BARROWS	CHECKED BY: F. BARROWS
ABUTMENT #1	SHEET 24 OF 44

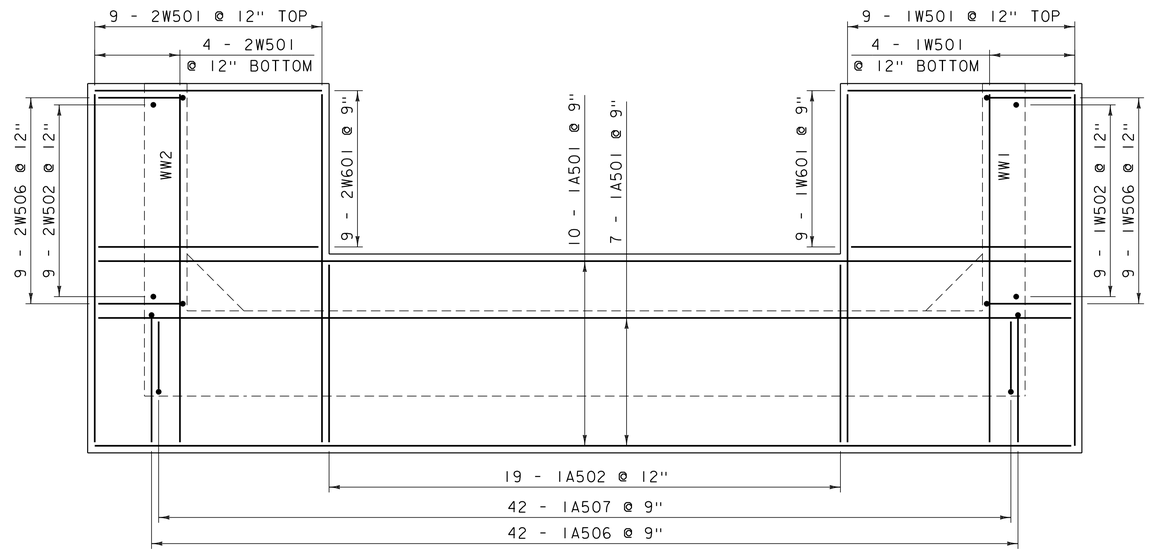

ABUTMENT 1 FOOTING PLAN

SCALE 3/8" = 1'-0"

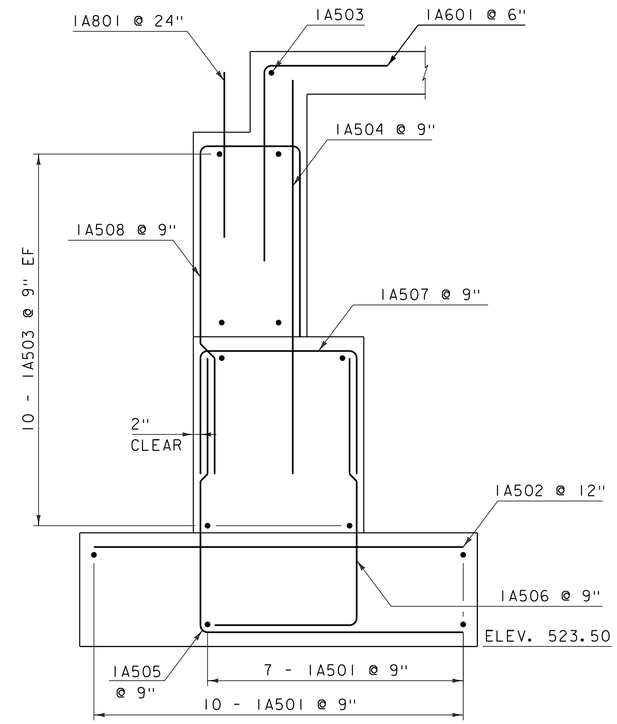

ABUTMENT 1 TYPICAL SECTION

SCALE 3/4" = 1'-0"

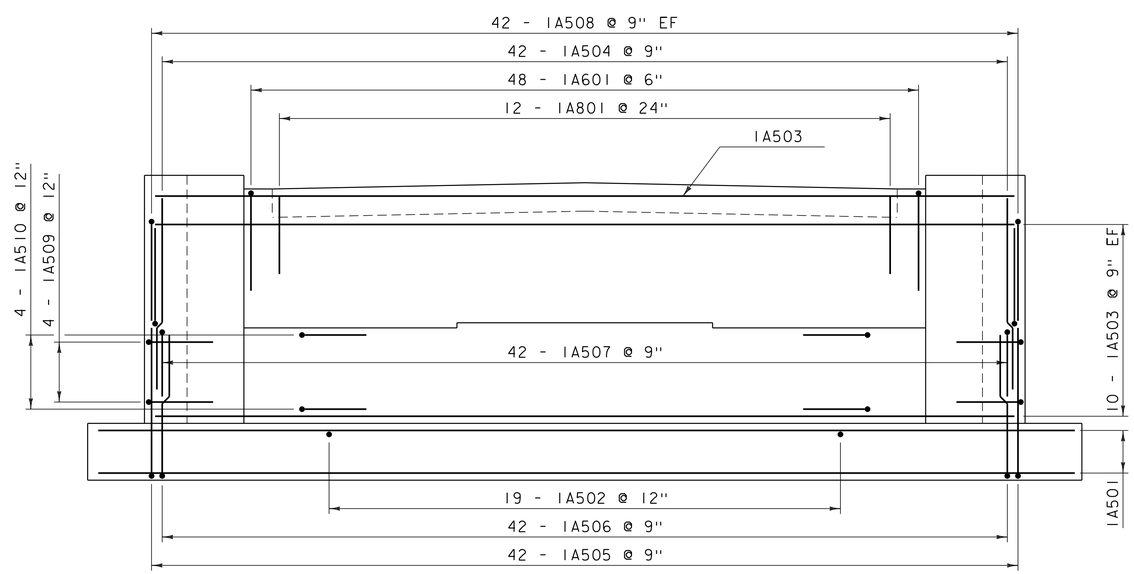

ABUTMENT 1 ELEVATION

SCALE 3/8" = 1'-0"

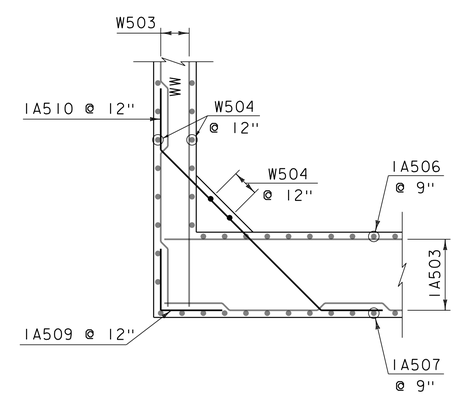

ABUTMENT 1 CORNER DETAIL
(BELOW BRIDGE SEAT)

SCALE 3/8" = 1'-0"

NOTE:

NF = NEAR FACE
FF = FAR FACE
EF = EACH FACE
▲ = CUT TO FIT IN FIELD
3" CLEAR, UNLESS OTHERWISE SPECIFIED ON THE PLANS.
2'-2" BAR LAP UNLESS OTHERWISE SPECIFIED ON THE PLANS.

PROJECT NAME: MONTPELIER	
PROJECT NUMBER: BO 1446 (36)	
FILE NAME: s13j082sub.dgn	PLOT DATE: 30-JUL-2015
PROJECT LEADER: C. W. CARLSON	DRAWN BY: R. PELLETT
DESIGNED BY: F. BARROWS	CHECKED BY: F. BARROWS
ABUTMENT #1 REINFORCING	SHEET 25 OF 44

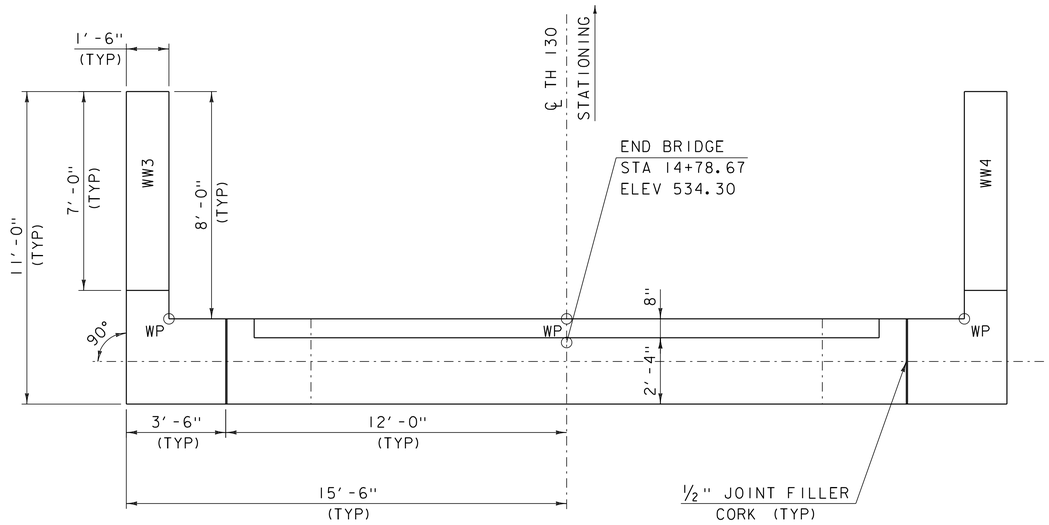

ABUTMENT 2 PLAN

SCALE 3/8" = 1'-0"

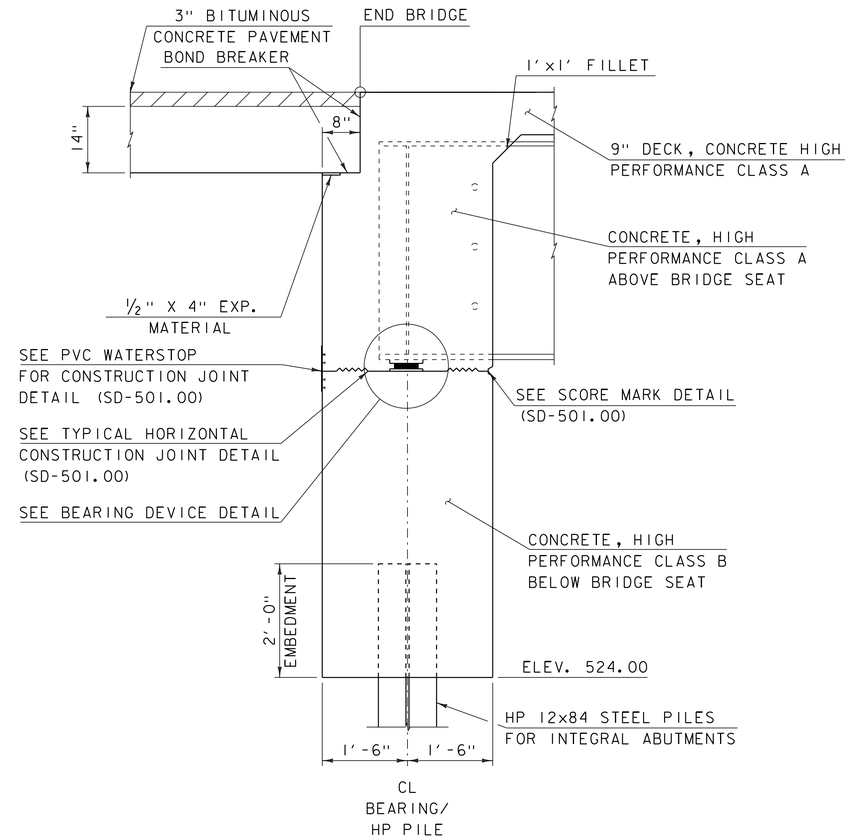

ABUTMENT 2 TYPICAL SECTION

SCALE 3/4" = 1'-0"

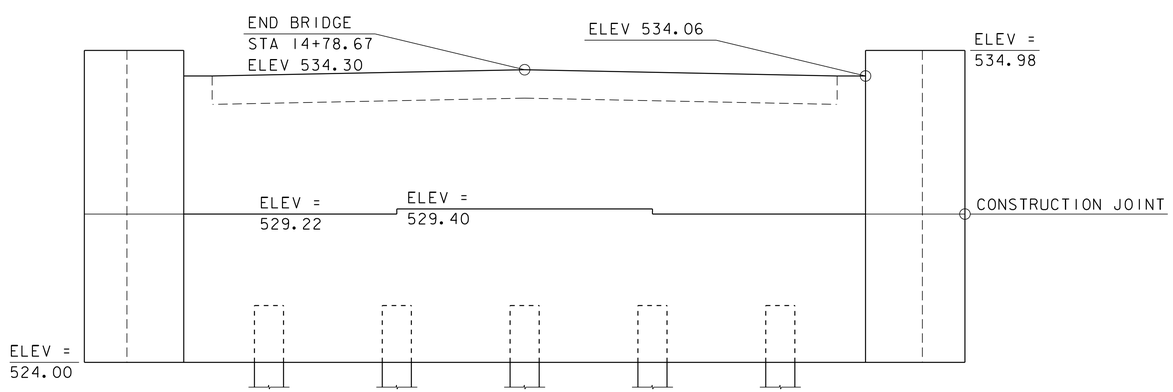

ABUTMENT 2 ELEVATION

SCALE 3/8" = 1'-0"

PROJECT NAME: MONTPELIER	
PROJECT NUMBER: BO 1446 (36)	
FILE NAME: s13j082sub.dgn	PLOT DATE: 30-JUL-2015
PROJECT LEADER: C. W. CARLSON	DRAWN BY: R. PELLETT
DESIGNED BY: F. BARROWS	CHECKED BY: F. BARROWS
ABUTMENT #2	SHEET 26 OF 44

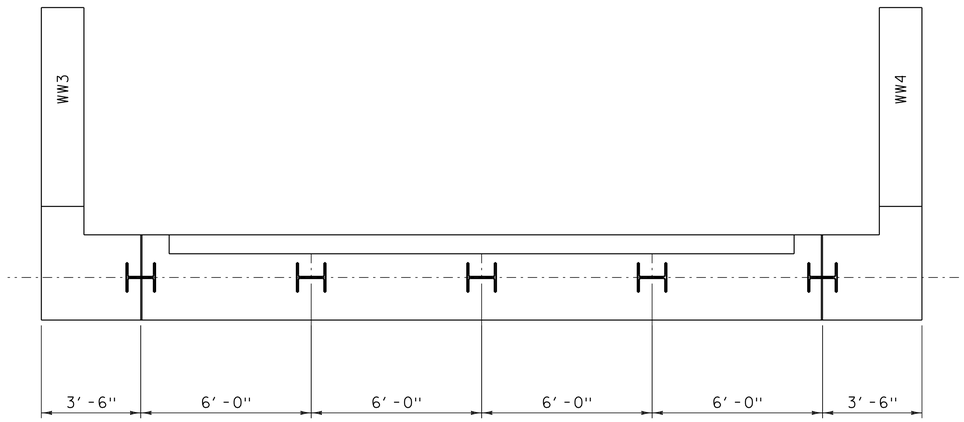

ABUTMENT 2 PLAN

SCALE 3/8" = 1'-0"

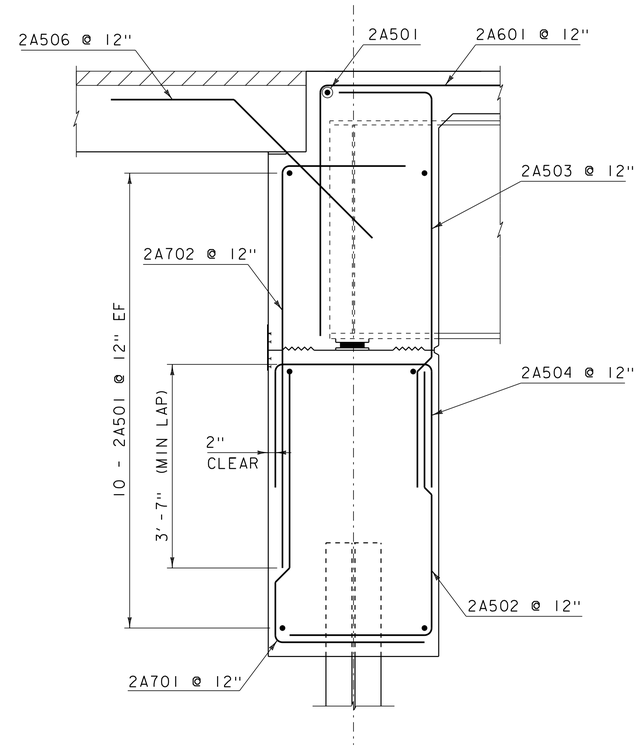

ABUTMENT 2 TYPICAL SECTION

SCALE 3/4" = 1'-0"

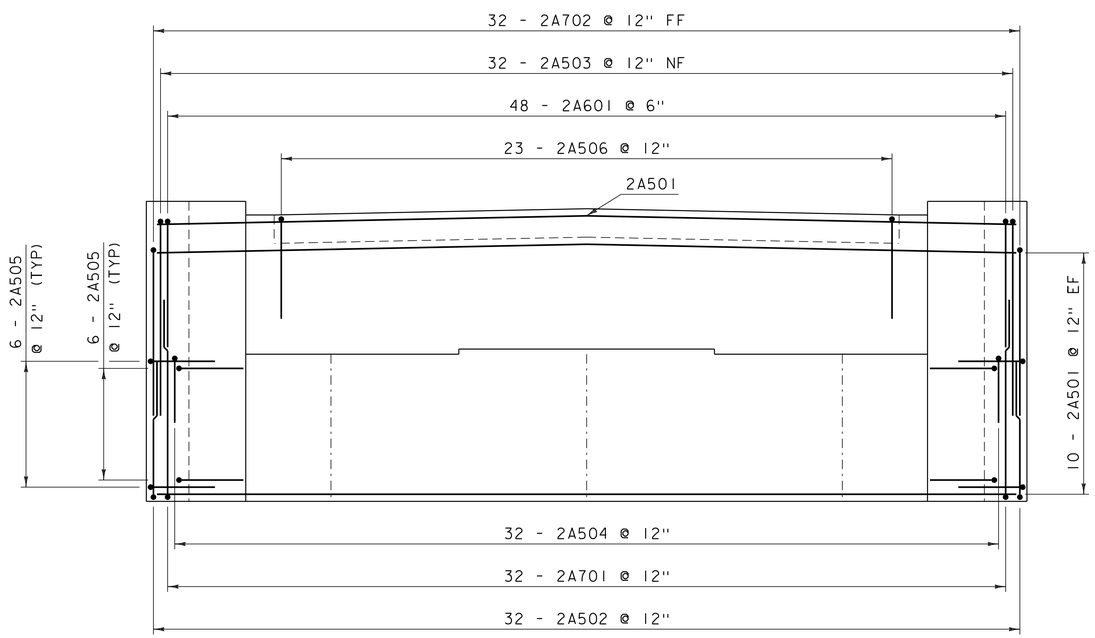

ABUTMENT 2 ELEVATION

SCALE 3/8" = 1'-0"

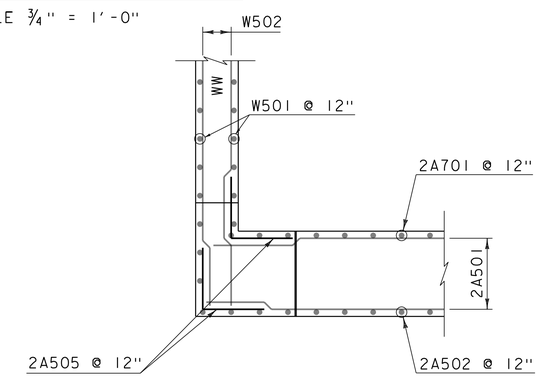

ABUTMENT 2 CORNER DETAIL
(BELOW BRIDGE SEAT)

SCALE 3/8" = 1'-0"

NOTE:

NF = NEAR FACE
FF = FAR FACE
EF = EACH FACE
▲ = CUT TO FIT IN FIELD
3" CLEAR, UNLESS OTHERWISE SPECIFIED ON THE PLANS.
2'-2" BAR LAP UNLESS OTHERWISE SPECIFIED ON THE PLANS.

PROJECT NAME: MONTPELIER	
PROJECT NUMBER: BO 1446 (36)	
FILE NAME: s13j082sub.dgn	PLOT DATE: 30-JUL-2015
PROJECT LEADER: C. W. CARLSON	DRAWN BY: R. PELLETT
DESIGNED BY: F. BARROWS	CHECKED BY: F. BARROWS
ABUTMENT #2 REINFORCING	SHEET 27 OF 44

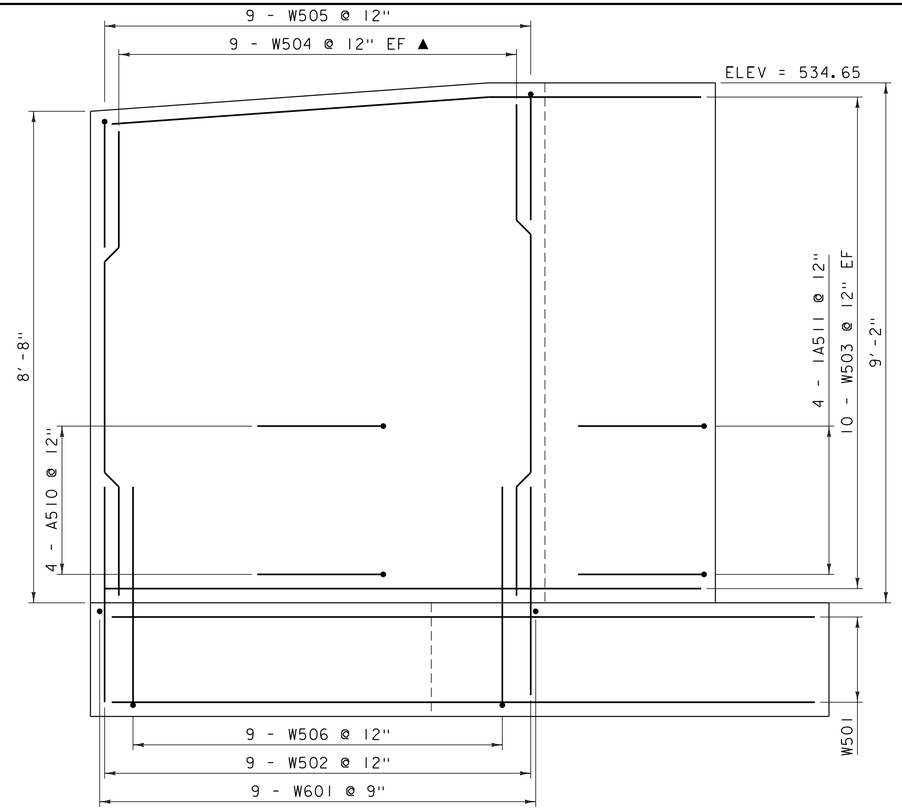

WINGWALL ELEVATION 1 & 2

SCALE ¾" = 1'-0"

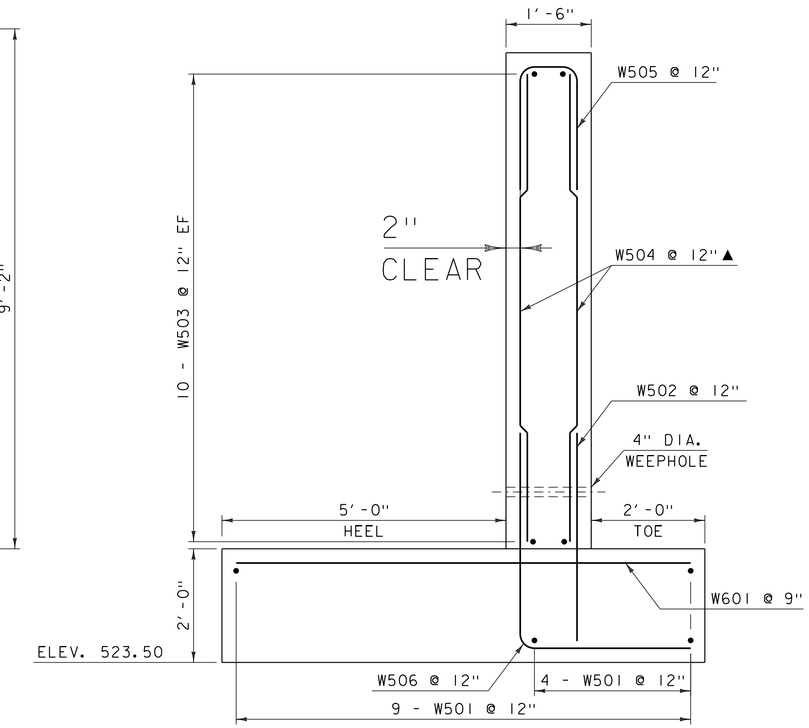

WINGWALL TYPICAL SECTION 1 & 2

SCALE ¾" = 1'-0"

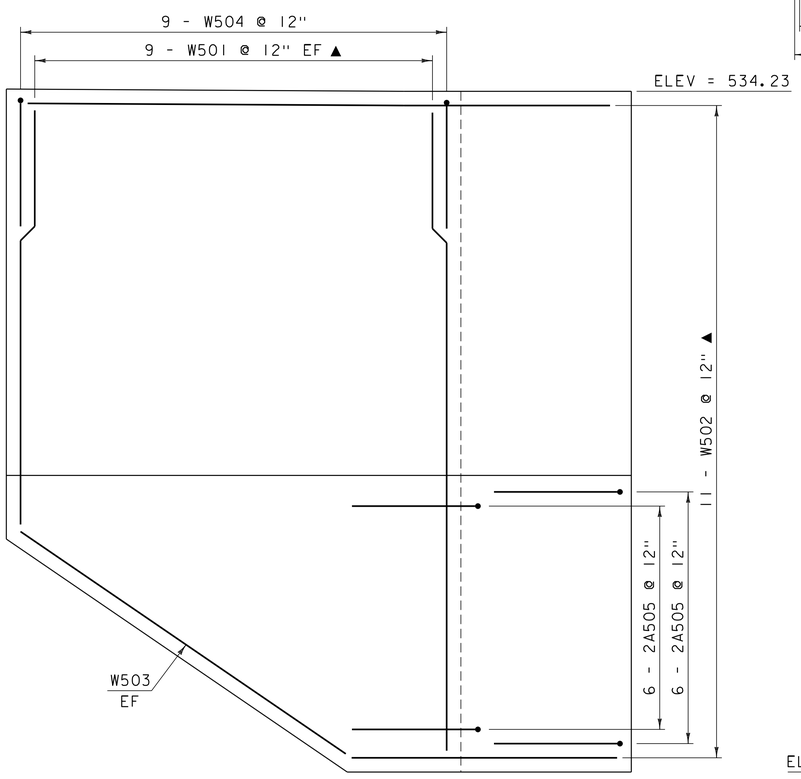

WINGWALL ELEVATION 3 & 4

SCALE ¾" = 1'-0"

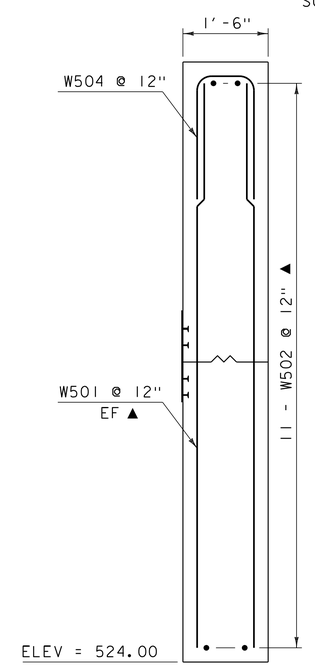

WINGWALL TYPICAL SECTION 3 & 4

SCALE ¾" = 1'-0"

NOTE:

NF = NEAR FACE
FF = FAR FACE
EF = EACH FACE
▲ = CUT TO FIT IN FIELD
3" CLEAR, UNLESS OTHERWISE SPECIFIED ON THE PLANS.
2'-2" BAR LAP UNLESS OTHERWISE SPECIFIED ON THE PLANS.

PROJECT NAME: MONTPELIER	
PROJECT NUMBER: BO 1446 (36)	
FILE NAME: s13j082sub.dgn	PLOT DATE: 30-JUL-2015
PROJECT LEADER: C. W. CARLSON	DRAWN BY: R. PELLETT
DESIGNED BY: F. BARROWS	CHECKED BY: F. BARROWS
WINGWALLS	SHEET 28 OF 44

STATE OF VERMONT
AGENCY OF TRANSPORTATION

REINFORCING STEEL SCHEDULE

ITEM	EACH	SIZE	LENGTH	MARK	TYPE	A	B	C	D	E	F	G	H	J	K	R	O
DECK																	
	50	5	43'- 9"	S501	STR	43'- 9"											
✳	173	5	23'- 6"	S502	STR	23'- 6"											
✳	63	6	44'- 0"	S601	STR	44'- 0"											
✳	173	6	23'- 6"	S701	STR	23'- 6"											
APPROACH SLAB 1																	
✳	18	5	21'- 6"	1AS501	STR	21'- 6"											
✳	45	6	15'- 2"	1AS601	1	0'- 8"	14'- 6"					---		0'- 6"			
APPROACH SLAB 2																	
	17	5	21'- 6"	2AS501	STR	21'- 6"											
	44	6	15'- 2"	2AS601	1	0'- 8"	14'- 6"					---		0'- 6"			
ABUTMENT #1																	
	17	5	34'- 6"	1A501	STR	34'- 6"											
✳	20	5	6'- 6"	1A502	STR	6'- 6"											
	21	5	30'- 6"	1A503	STR	30'- 6"											
	42	5	7'- 1"	1A504	STR	7'- 1"											
✳	13	8	3'- 0"	1A801	STR	3'- 0"											
	42	5	9'- 7"	1A505	17		5'- 0"	4'- 7"	---								
	42	5	7'- 6"	1A506	17		2'- 6"	5'- 0"	---								
	42	5	6'- 11"	1A507	17		2'- 2"	2'- 7"	2'- 2"								
	42	5	10'- 1"	1A508	S10		3'- 9"	2'- 7"	3'- 9"								
	8	5	4'- 4"	1A509	17		2'- 2"	2'- 2"	---								
	8	5	12'- 4"	1A510	22		2'- 2"	8'- 0"	2'- 2"				1'- 6"	1'- 6"	1'- 6"	1'- 6"	
	48	6	25'- 11"	1A601	17		21'- 5"	4'- 6"	---								
WINGWALL #1																	
	13	5	12'- 6"	1W501	STR	12'- 6"											
	9	5	3'- 11"	1W502	STR	3'- 11"											
	20	5	10'- 6"	1W503	STR	10'- 6"											
▲	18	5	8'- 8"	1W504	STR	8'- 8"											
✳	10	6	8'- 0"	1W601	STR	8'- 0"											
	9	5	5'- 5"	1W505	S10		2'- 2"	1'- 1"	2'- 2"								
	9	5	7'- 0"	1W506	17		3'- 11"	3'- 1"	---								
WINGWALL #2																	
	13	5	12'- 6"	2W501	STR	12'- 6"											
	9	5	3'- 11"	2W502	STR	3'- 11"											
	20	5	10'- 6"	2W503	STR	10'- 6"											
	18	5	8'- 8"	2W504	STR	8'- 8"											
	9	6	8'- 0"	2W601	STR	8'- 0"											
	9	5	5'- 5"	2W505	S10		2'- 2"	1'- 1"	2'- 2"								
	9	5	7'- 0"	2W506	17		3'- 11"	3'- 1"	---								
ABUTMENT #2																	
	21	5	30'- 6"	2A501	STR	30'- 6"											
	32	5	7'- 6"	2A502	22		4'- 11"	2'- 7"	---								
	32	5	8'- 10"	2A503	22		1'- 10"	7'- 0"	---								
	32	5	6'- 11"	2A504	S10		2'- 2"	2'- 7"	2'- 2"								
	24	5	4'- 4"	2A505	17		2'- 2"	2'- 2"	---								
	23	5	7'- 4"	2A506	22		2'- 2"	5'- 2"	---				1'- 6"	1'- 6"	---	---	
	48	6	25'- 11"	2A601	17		21'- 5"	4'- 6"	---								
	32	7	7'- 6"	2A701	17		4'- 11"	2'- 7"	---								
	32	7	9'- 5"	2A702	17		2'- 2"	7'- 3"	---								

ITEM	EACH	SIZE	LENGTH	MARK	TYPE	A	B	C	D	E	F	G	H	J	K	R	O
WINGWALL #3																	
▲	18	5	9'- 9"	3W501	STR		9'- 9"										
	22	5	10'- 6"	3W502	STR		10'- 6"										
	2	5	7'- 1"	3W503	STR	7'- 1"											
	9	5	5'- 5"	3W504	S10		2'- 2"	1'- 1"	2'- 2"								
WINGWALL #4																	
▲	18	5	9'- 9"	4W501	STR		9'- 9"										
	22	5	10'- 6"	4W502	STR		10'- 6"										
	2	5	7'- 1"	4W503	STR	7'- 1"											
	9	5	5'- 5"	4W504	S10		2'- 2"	1'- 1"	2'- 2"								

~ NOTES ~

1. UNLESS OTHERWISE DESIGNATED, ALL BAR REINFORCEMENT FOR CONCRETE IN SIZES UP TO AND INCLUDING NO. 18 SHALL CONFORM TO THE REQUIREMENTS OF THE "SPECIFICATIONS FOR DEFORMED BILLET-STEEL BARS FOR CONCRETE REINFORCEMENT", AASHTO M 31 (ASTM A 615-SI). ALL BARS SHALL BE GRADE 60, UNLESS OTHERWISE DESIGNATED.
2. FOR TYPICAL BENDING DETAILS, RECOMMENDED PIN DIAMETER "D" OF BENDS AND HOOKS, AND OTHER STANDARD PRACTICE, SEE CURRENT CONCRETE REINFORCING STEEL INSTITUTE "MANUAL OF STANDARD PRACTICE".
3. BARS WHICH REQUIRE MORE ACCURATE BENDING THAN STANDARD PRACTICES SHOULD HAVE LIMITS INDICATED.
4. ALL DIMENSIONS ARE OUT TO OUT OF BAR EXCEPT "A" AND "G" ON STANDARD 180 DEGREE AND 135 DEGREE HOOKS.
5. "J" DIMENSION ON 180 DEGREE HOOKS TO BE SHOWN ONLY WHERE NECESSARY TO RESTRICT HOOK SIZE. OTHERWISE, STANDARD HOOKS ARE TO BE USED.
6. "H" DIMENSION ON STIRRUPS TO BE SHOWN ONLY WHEN NECESSARY TO MAINTAIN CLEARANCES.
7. WHERE SLOPE DIFFERS FROM 45 DEGREES, DIMENSIONS "H" AND "K" MUST BE SHOWN.
8. ▲ DENOTES BARS TO BE CUT IN FIELD.
9. ✳ DENOTES ONE EXTRA BAR ADDED FOR TESTING PURPOSES.
10. △ DENOTES TWO EXTRA BARS ADDED FOR TESTING PURPOSES.
11. E IN BAR MARK PREFIX DENOTES EPOXY COATED REINFORCING STEEL.

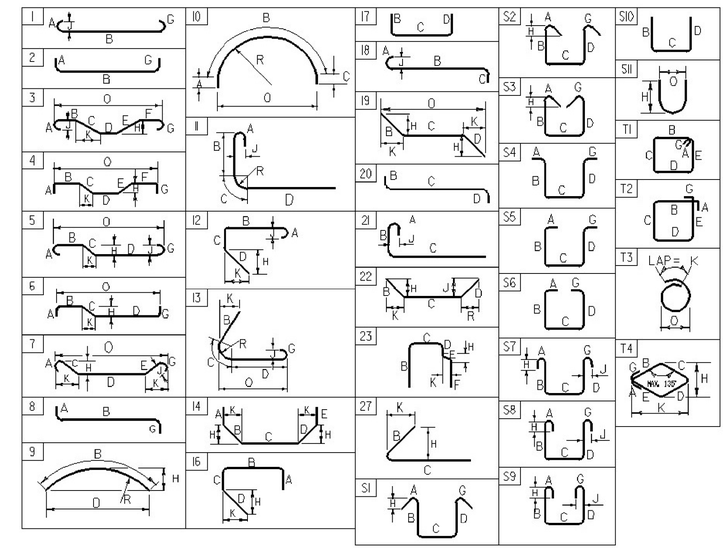

ASTM STANDARD REINFORCING BARS

BAR SIZE DESIGNATION	WEIGHT POUNDS PER FOOT	NOMINAL DIMENSIONS ROUND SECTION		
		DIAMETER INCHES	AREA INCHES2	PERIMETER INCHES
#3	0.376	0.375	0.11	1.178
#4	0.668	0.500	0.20	1.571
#5	1.043	0.625	0.31	1.963
#6	1.502	0.750	0.44	2.356
#7	2.04	0.875	0.60	2.749
#8	2.670	1.000	0.79	3.14
#9	3.400	1.13	1.00	3.54
#10	4.3	1.270	1.27	3.990
#11	5.31	1.410	1.56	4.430
#14	7.65	1.69	2.25	5.32
#18	13.60	2.26	4.00	7.09

~ REINFORCING STEEL CORROSION RESISTANCE LEVEL ~

THE REINFORCING STEEL MARKS IN THIS SCHEDULE INDICATE THE REQUIRED BAR CORROSION RESISTANCE LEVEL. CORROSION RESISTANCE LEVEL IS DENOTED WITH A .2 FOR LEVEL TWO SUFFIX OR .3 FOR LEVEL THREE SUFFIX .1 FOR LEVEL ONE IS TO BE OMITTED. THE BAR MATERIAL TYPE AND BAR STEEL GRADE PROVIDED FOR EACH CORROSION LEVEL WILL BE RECORDED ON THE PLAN SET PI SHEET FOR AS-BUILT RECORD PLAN ARCHIVES.

PROJECT NAME: MONTPELIER
PROJECT NUMBER: BO 1446 (36)

FILE NAME: s13j082rss.dgn
PROJECT LEADER: C. W. CARLSON
DESIGNED BY: F. BARROWS
REINFORCING STEEL SCHEDULE

PLOT DATE: 30-JUL-2015
DRAWN BY: R. PELLETT
CHECKED BY: F. BARROWS
SHEET 29 OF 44

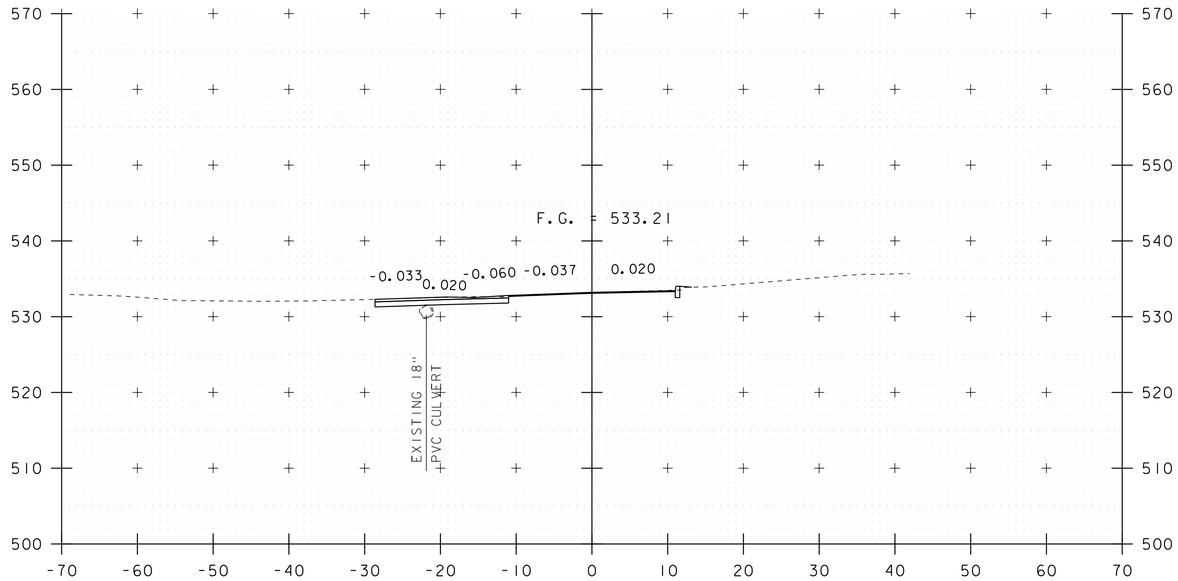

12+75

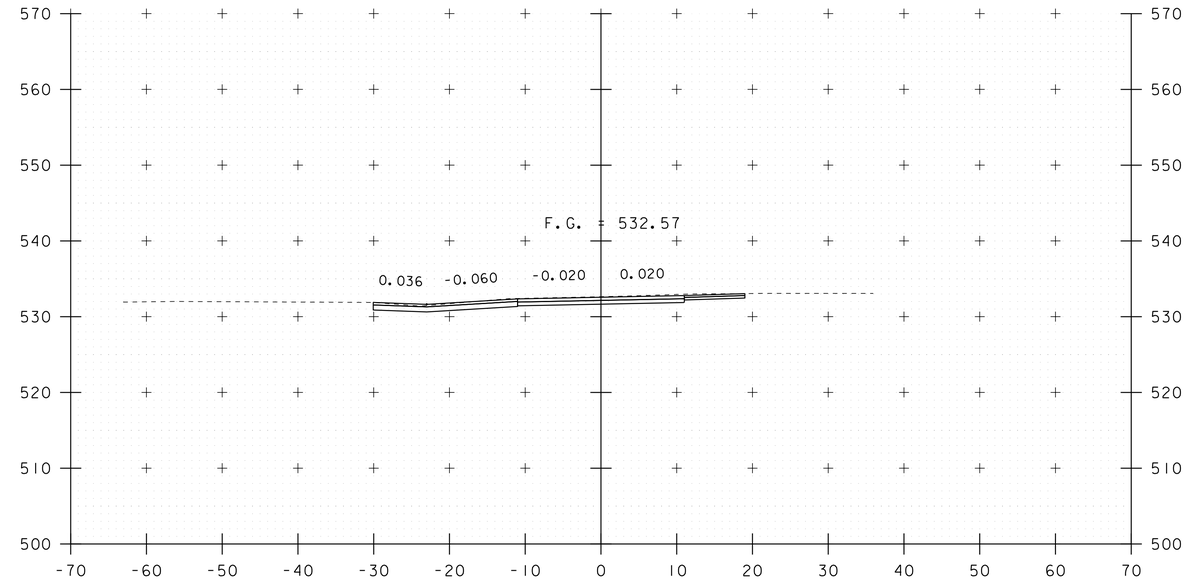

13+13

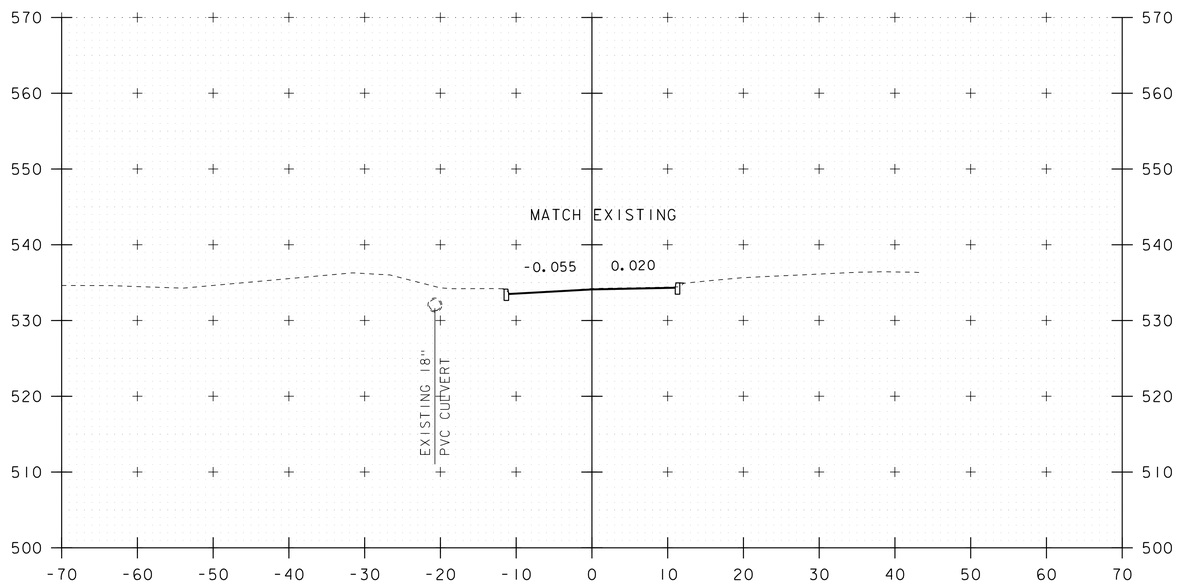

BEGIN APPROACH 12+50

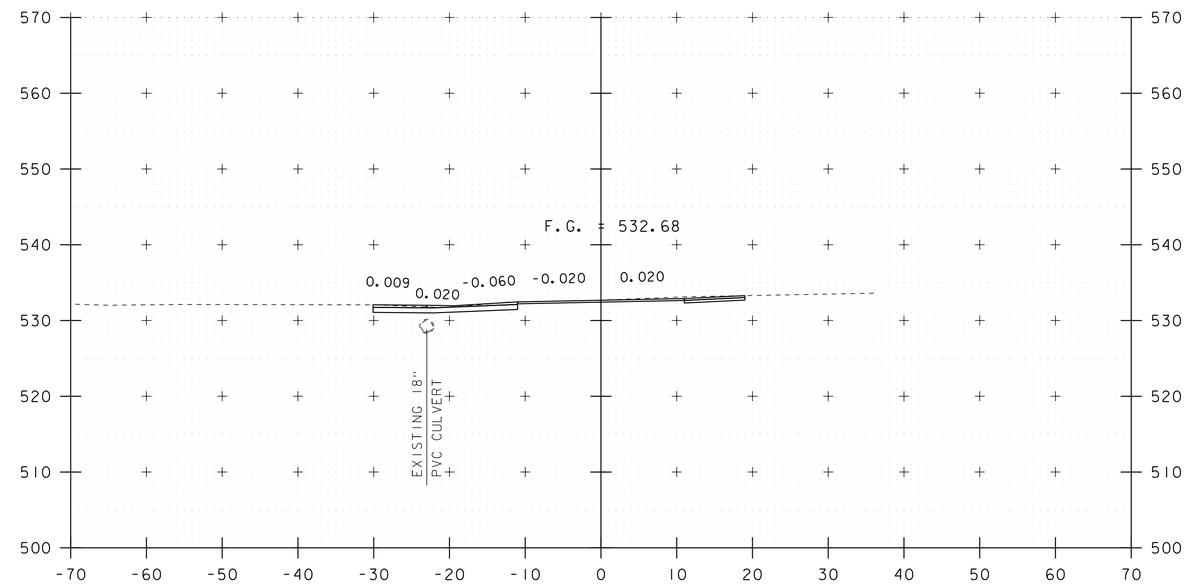

13+00

STA. 12+50 TO STA. 13+13

PROJECT NAME: MONTPELIER	
PROJECT NUMBER: BO 1446 (36)	
FILE NAME: sl3j082xsl.dgn	PLOT DATE: 30-JUL-2015
PROJECT LEADER: C. W. CARLSON	DRAWN BY: M. LONGSTREET
DESIGNED BY: H. SALLS	CHECKED BY: H. SALLS
TH 130 CROSS SECTIONS 1	SHEET 30 OF 44

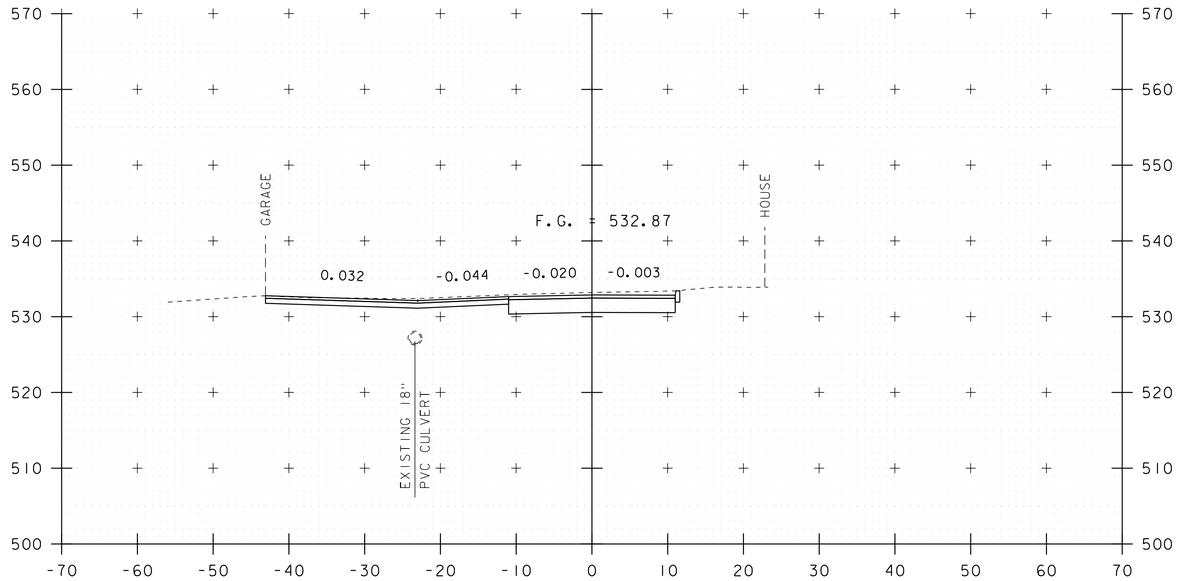

BEGIN PROJECT 13+50

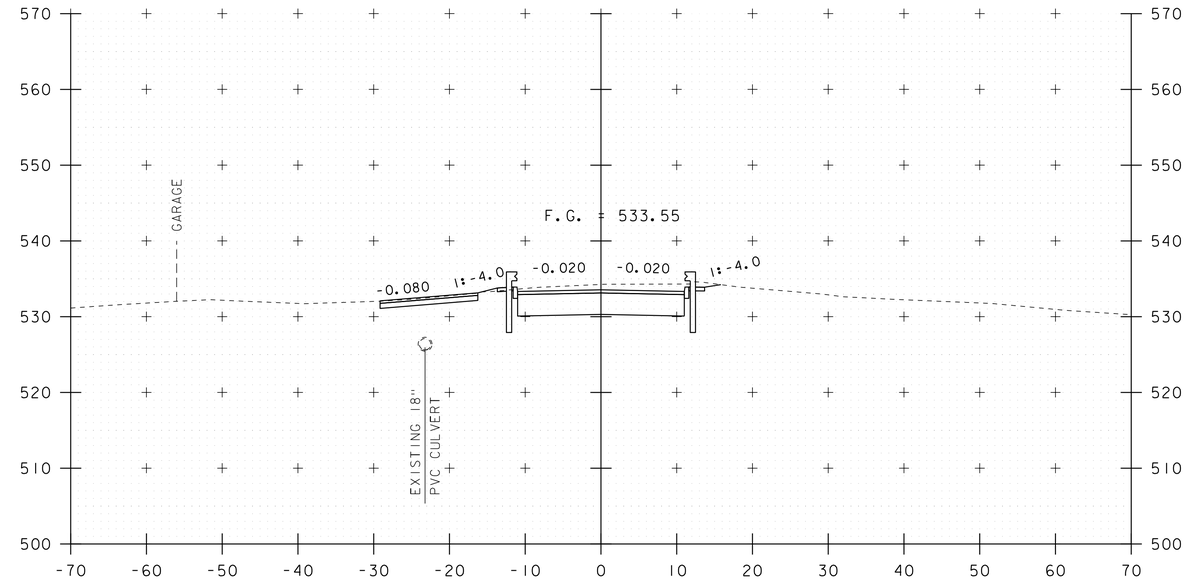

13+75

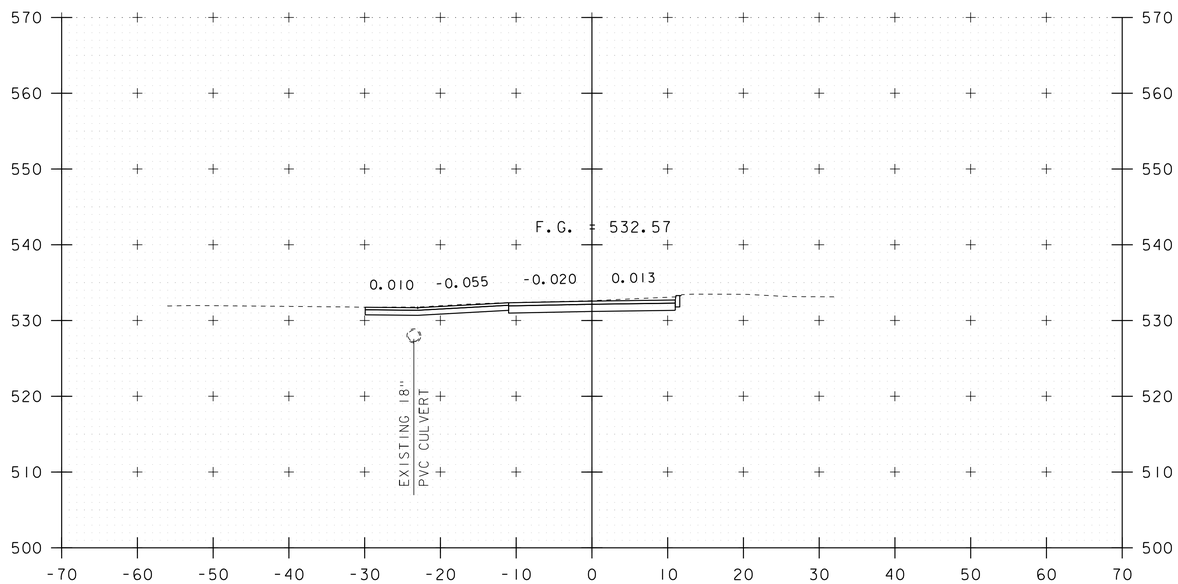

13+25

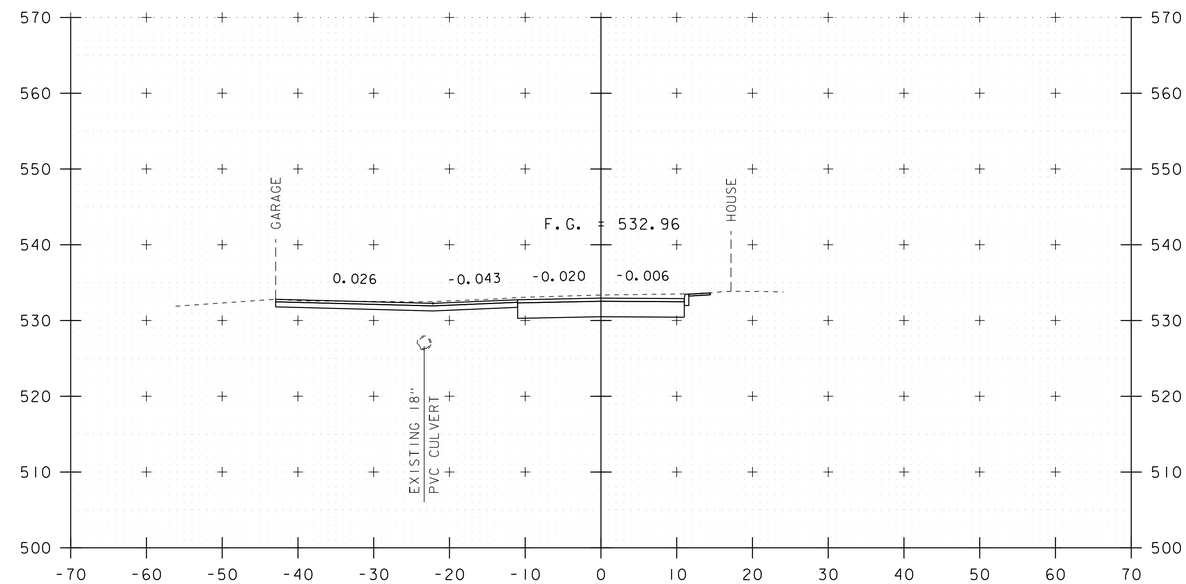

13+54

STA. 13+25 TO STA. 13+75

PROJECT NAME: MONTPELIER	
PROJECT NUMBER: BO 1446 (36)	
FILE NAME: sl3j082xsl.dgn	PLOT DATE: 30-JUL-2015
PROJECT LEADER: C. W. CARLSON	DRAWN BY: M. LONGSTREET
DESIGNED BY: H. SALLS	CHECKED BY: H. SALLS
TH 130 CROSS SECTIONS 2	SHEET 31 OF 44

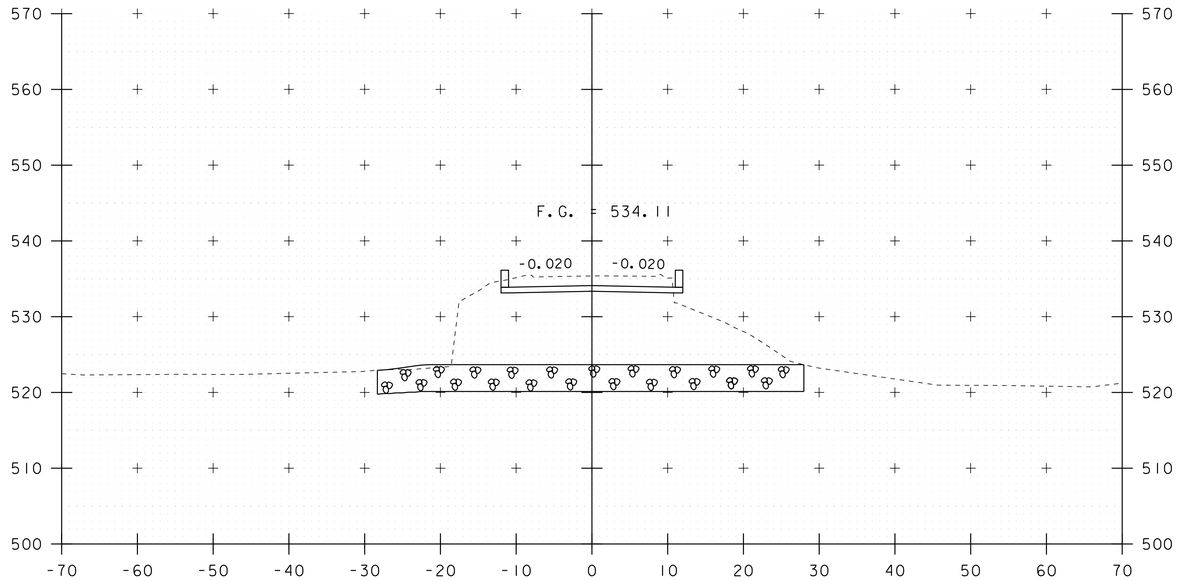

14+00

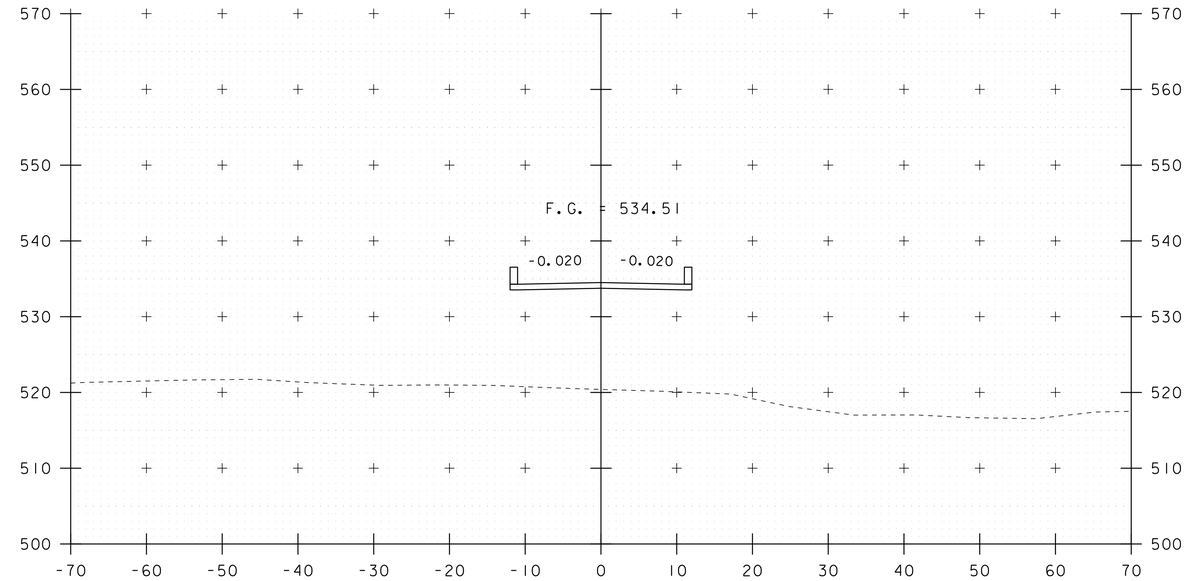

14+50

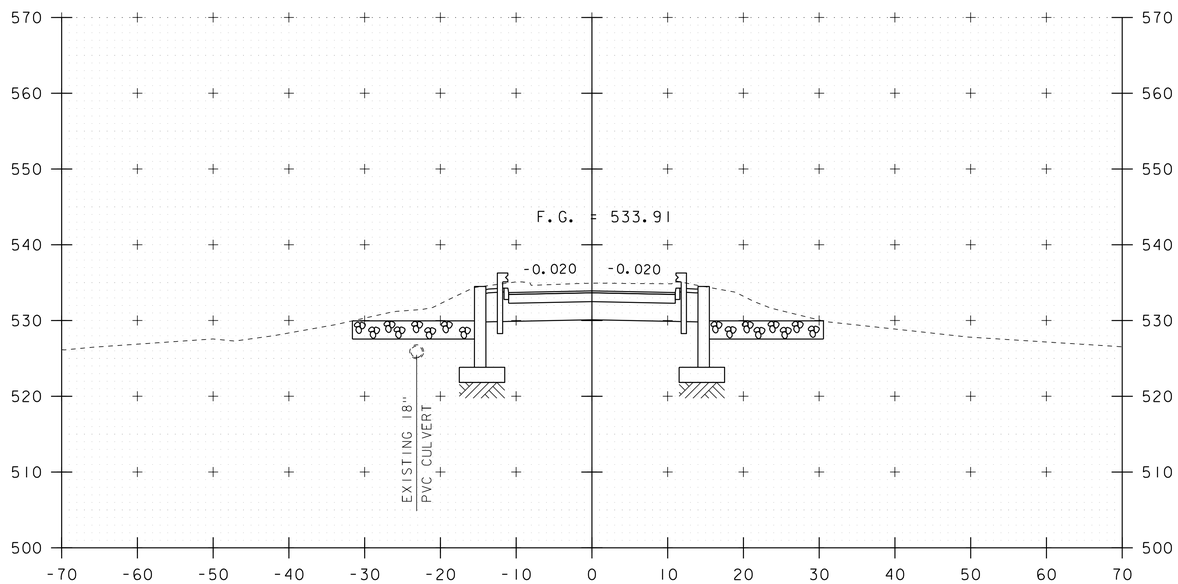

BEGIN BRIDGE
STA 13+92.83

13+90

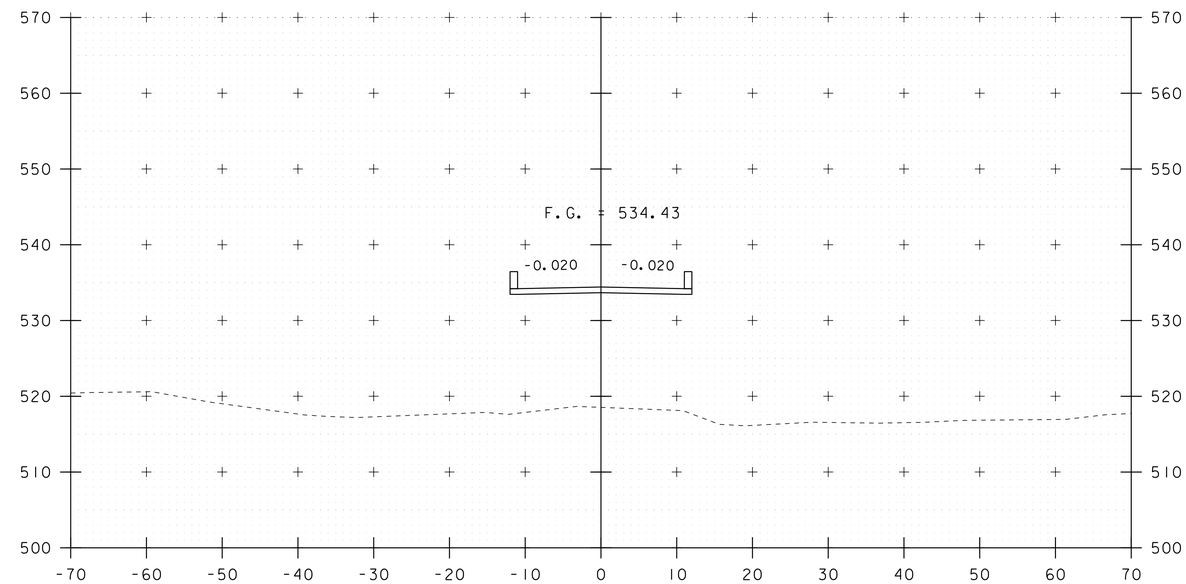

14+25

STA. 13+90 TO STA. 14+50

PROJECT NAME: MONTPELIER	
PROJECT NUMBER: BO 1446 (36)	
FILE NAME: sl3j082xsl.dgn	PLOT DATE: 30-JUL-2015
PROJECT LEADER: C. W. CARLSON	DRAWN BY: M. LONGSTREET
DESIGNED BY: H. SALLS	CHECKED BY: H. SALLS
TH 130 CROSS SECTIONS 3	SHEET 32 OF 44

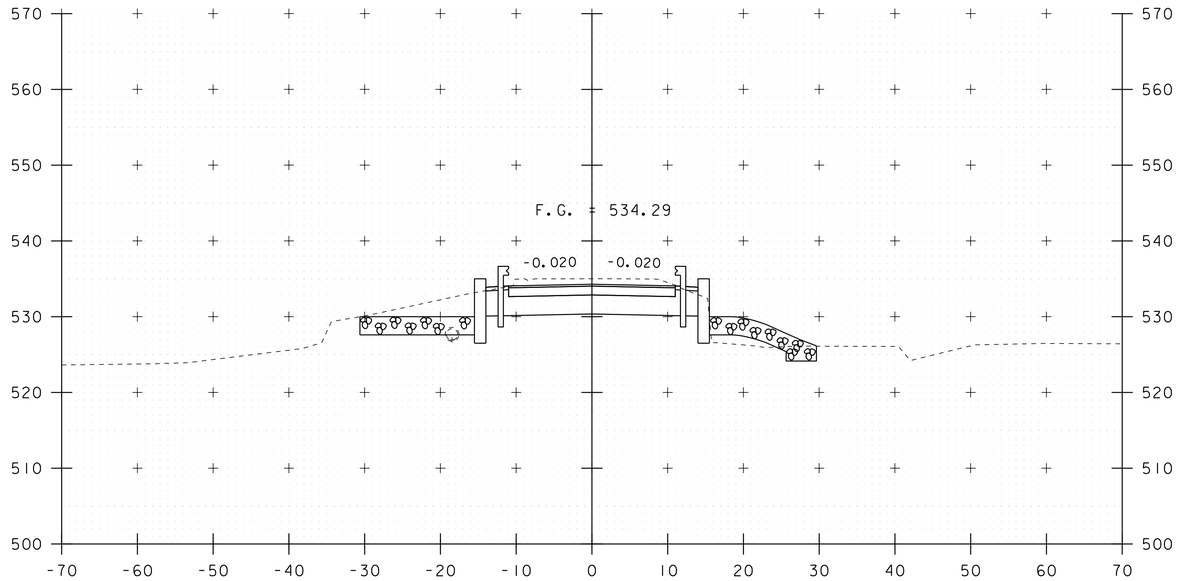

END BRIDGE
STA 14+78.67

14+80

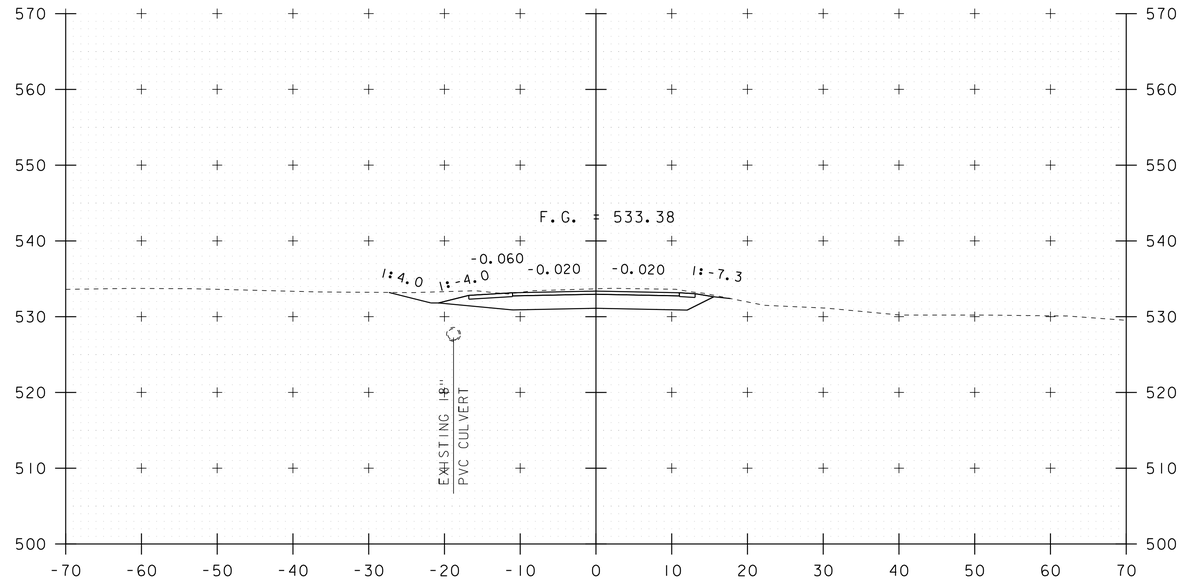

15+25

END PROJECT

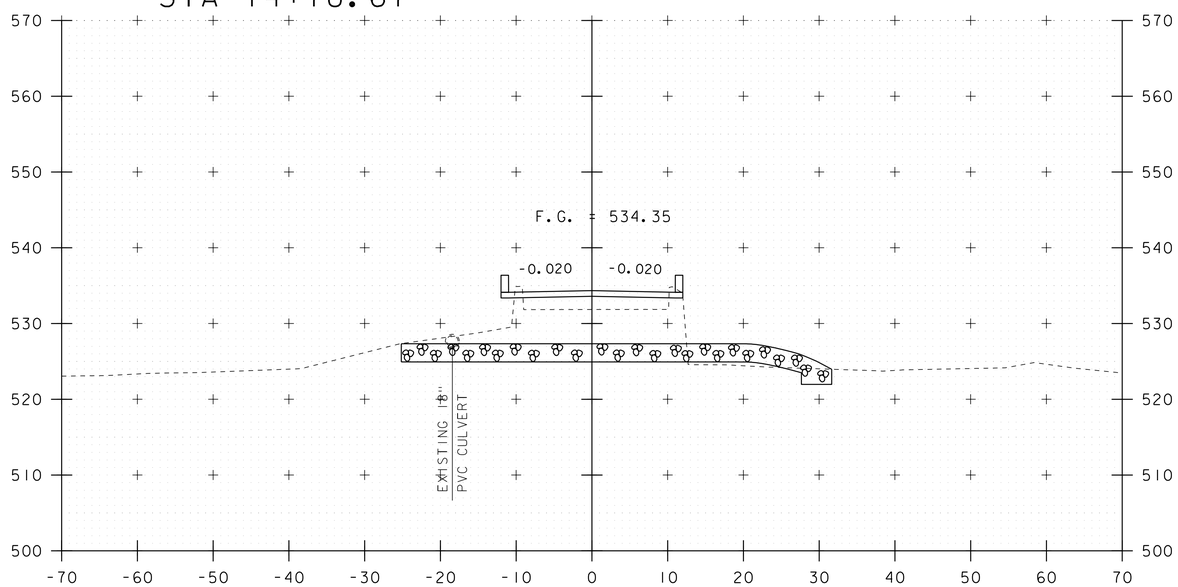

14+75

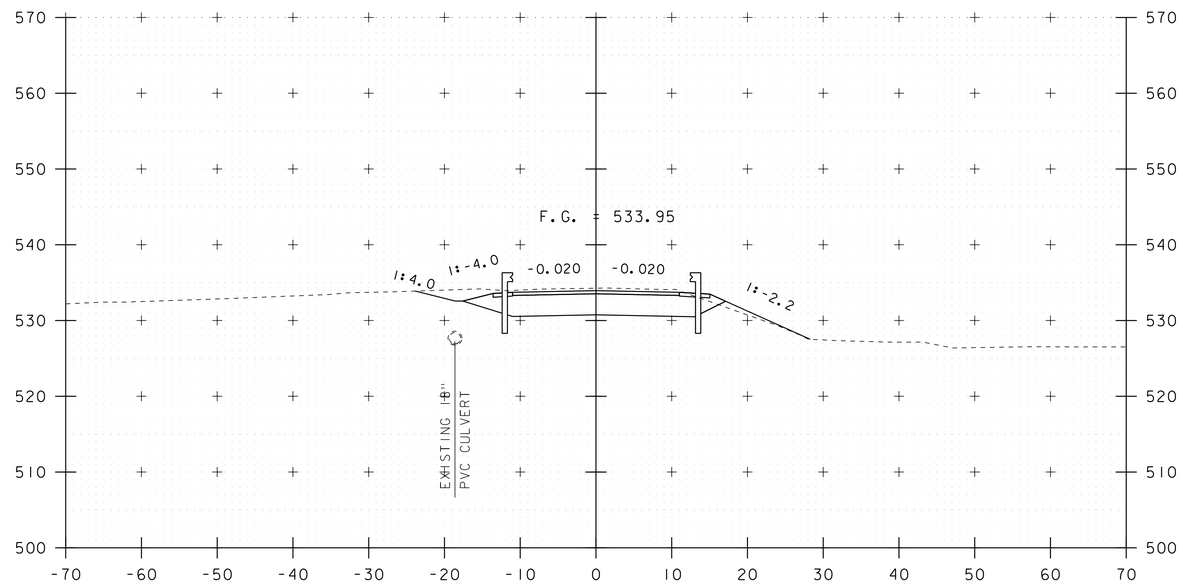

15+00

STA. 14+75 TO STA. 15+25

PROJECT NAME: MONTPELIER	
PROJECT NUMBER: BO 1446 (36)	
FILE NAME: sl3j082xsl.dgn	PLOT DATE: 30-JUL-2015
PROJECT LEADER: C. W. CARLSON	DRAWN BY: M. LONGSTREET
DESIGNED BY: H. SALLS	CHECKED BY: H. SALLS
TH 130 CROSS SECTIONS 4	SHEET 33 OF 44

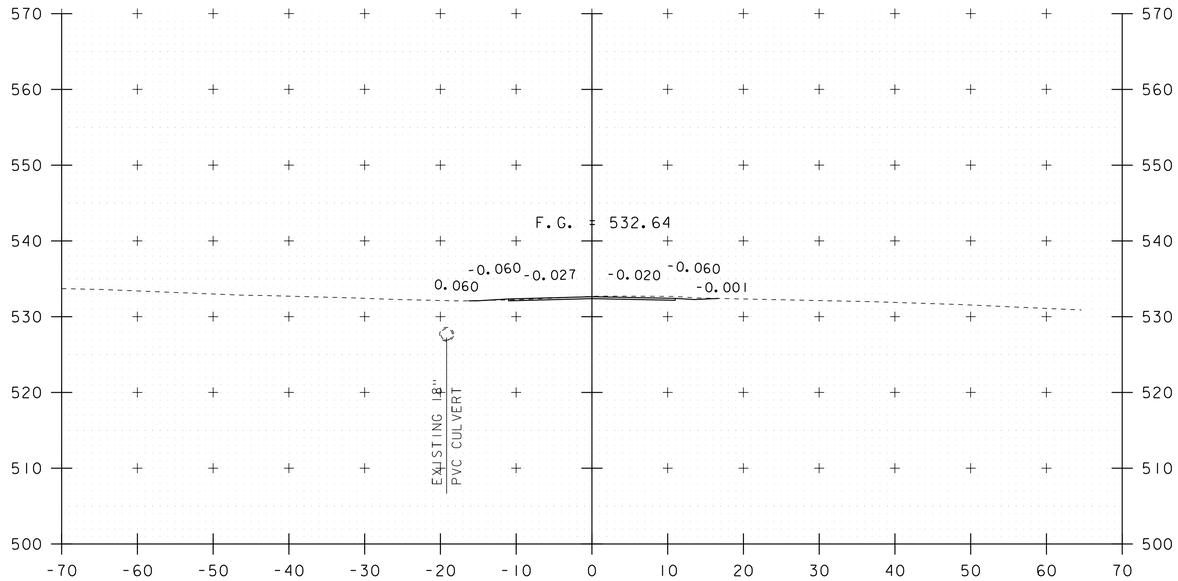

15+75

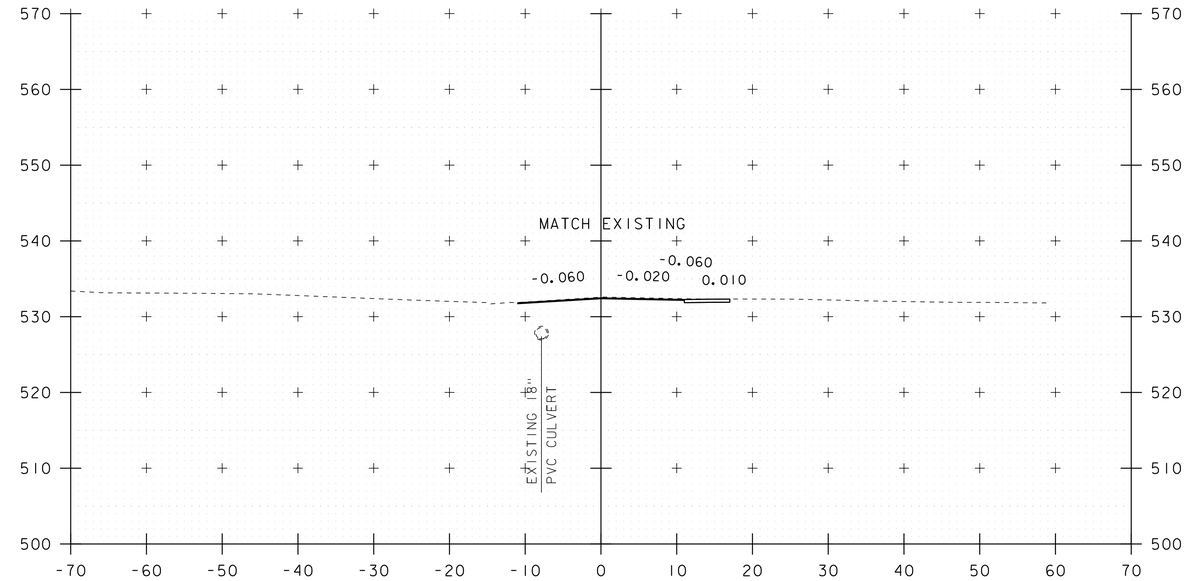

16+25 END APPROACH

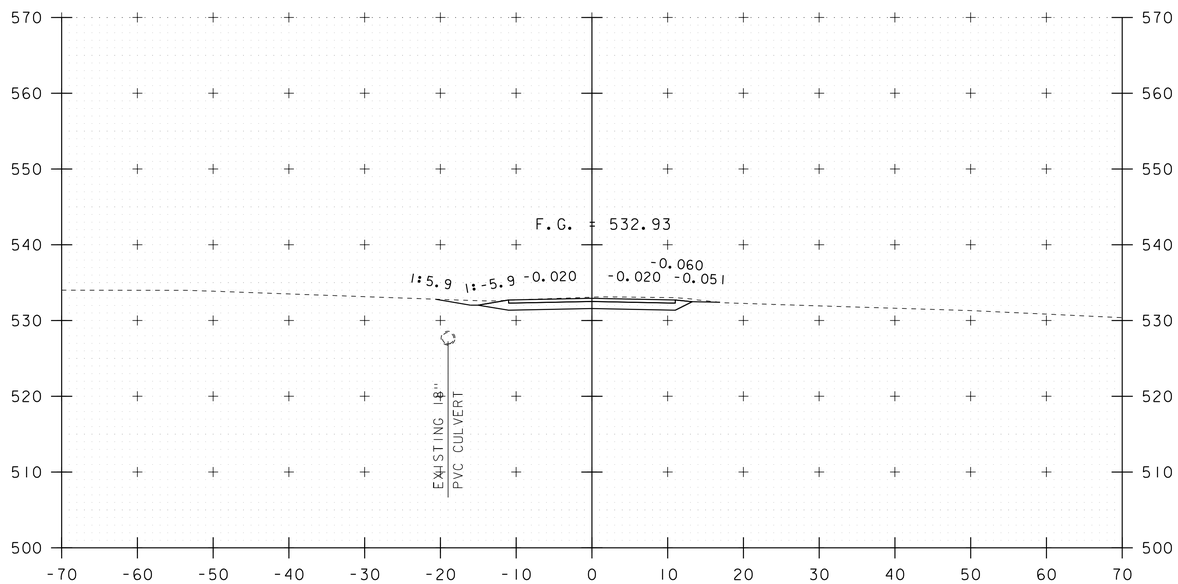

15+50

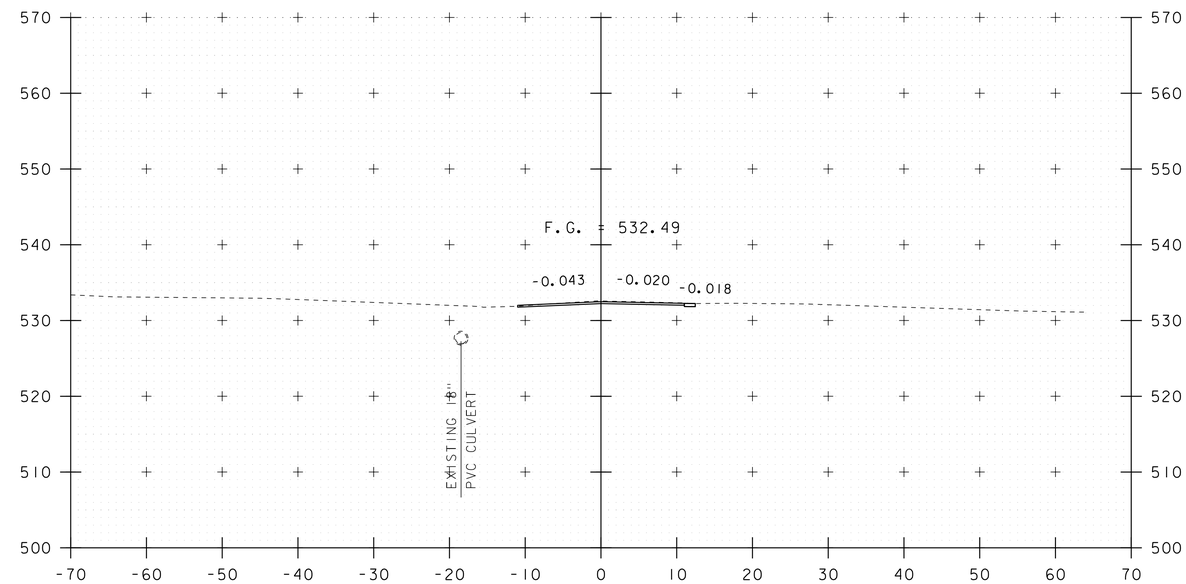

16+00

STA. 15+50 TO STA. 16+25

PROJECT NAME: MONTPELIER	
PROJECT NUMBER: BO 1446 (36)	
FILE NAME: sl3j082xsl.dgn	PLOT DATE: 30-JUL-2015
PROJECT LEADER: C. W. CARLSON	DRAWN BY: M. LONGSTREET
DESIGNED BY: H. SALLS	CHECKED BY: H. SALLS
TH 130 CROSS SECTIONS 5	SHEET 34 OF 44

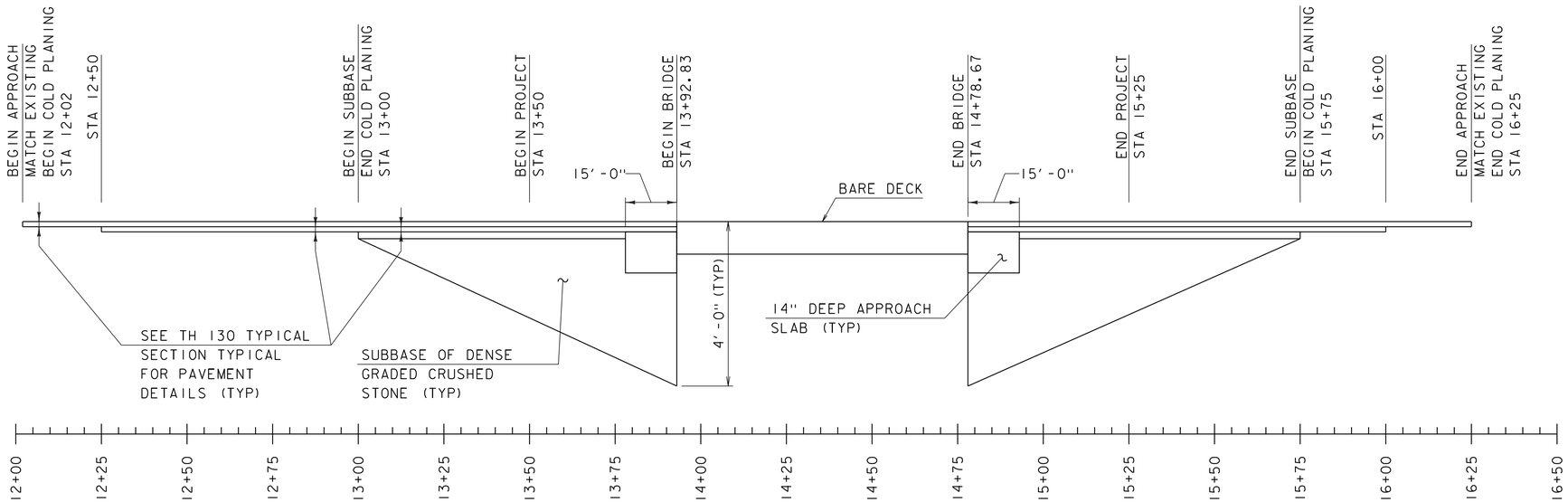

MATERIAL TRANSITION DETAIL

SCALE: HORIZONTAL 1" = 20'-0"
VERTICAL 12 (TIMES EXAGGERATED)

PROJECT NAME: MONTPELIER	
PROJECT NUMBER: BO 1446 (36)	
FILE NAME: sl3j082pro.dgn	PLOT DATE: 30-JUL-2015
PROJECT LEADER: C. W. CARLSON	DRAWN BY: M. LONGSTREET
DESIGNED BY: H. SALLS	CHECKED BY: H. SALLS
MATERIAL TRANSITION DETAIL	SHEET 35 OF 44

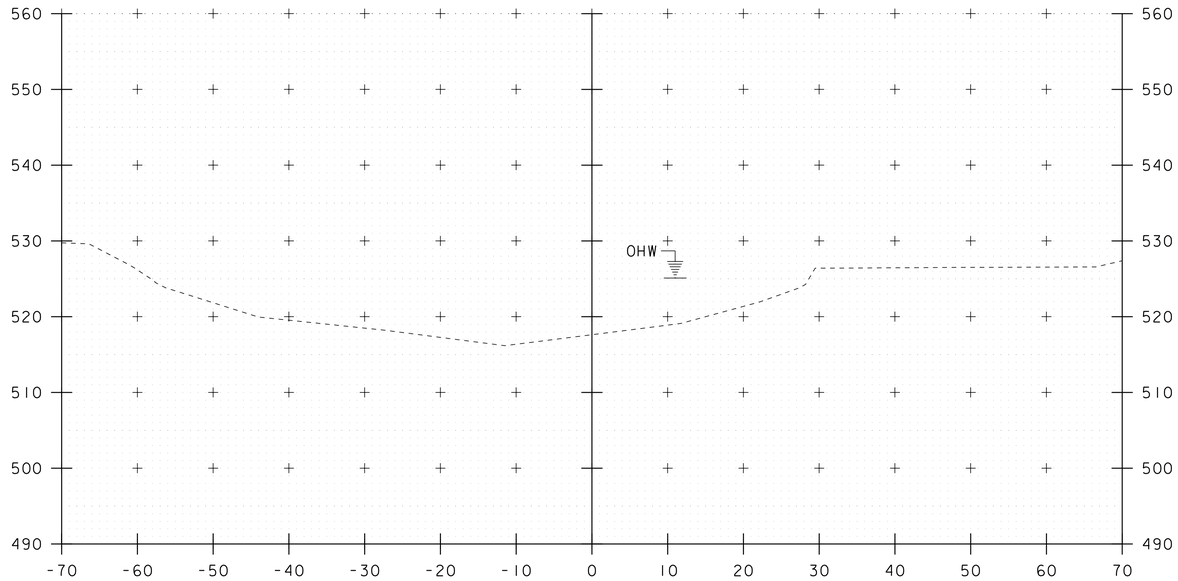

50+50

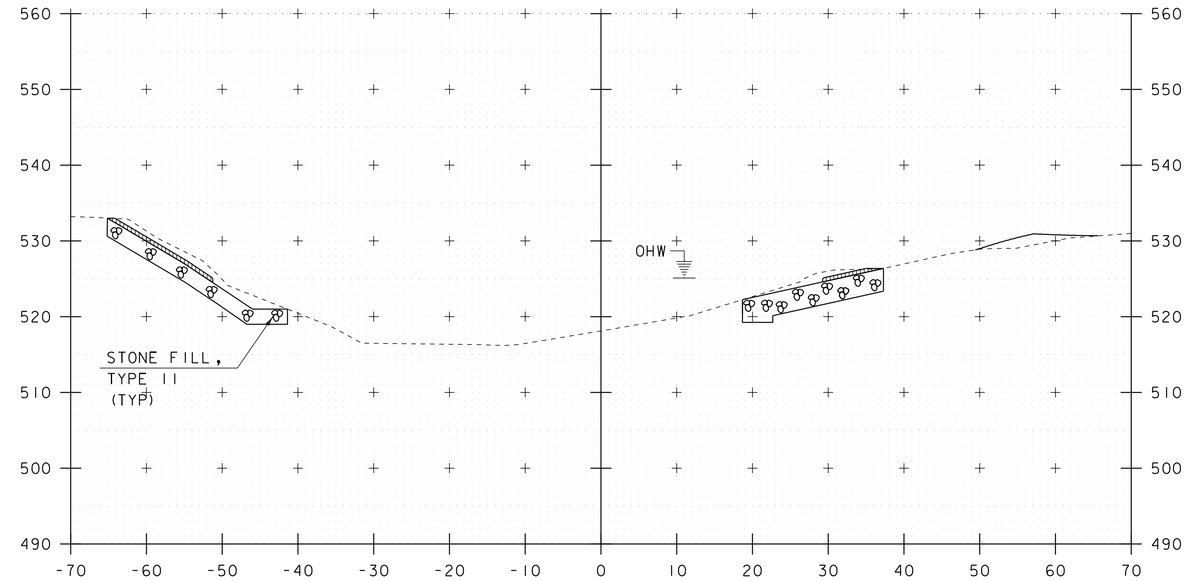

51+00

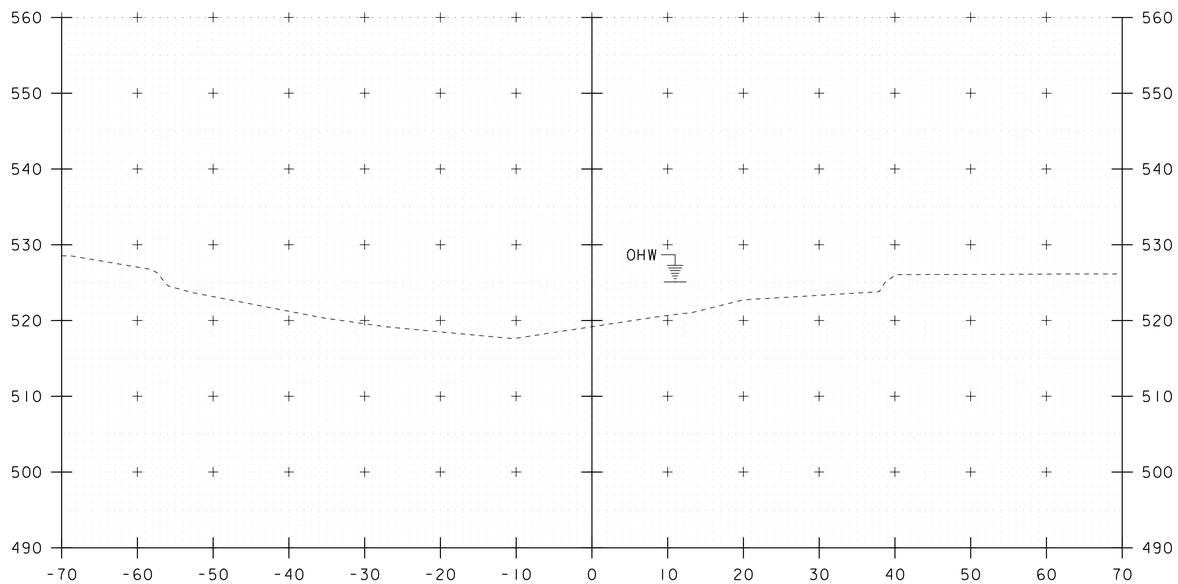

50+25

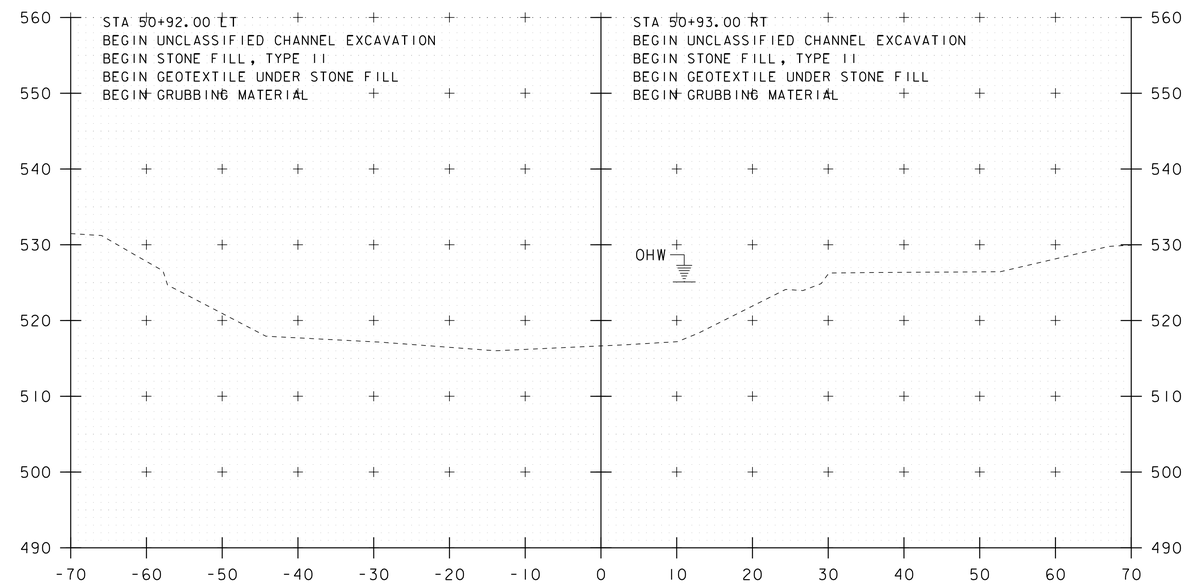

50+75

STA. 50+25 TO STA. 51+00

PROJECT NAME: MONTPELIER	
PROJECT NUMBER: BO 1446 (36)	
FILE NAME: sl3j082xsl.dgn	PLOT DATE: 30-JUL-2015
PROJECT LEADER: C. W. CARLSON	DRAWN BY: M. LONGSTREET
DESIGNED BY: H. SALLS	CHECKED BY: H. SALLS
CHANNEL CROSS SECTIONS 1	SHEET 36 OF 44

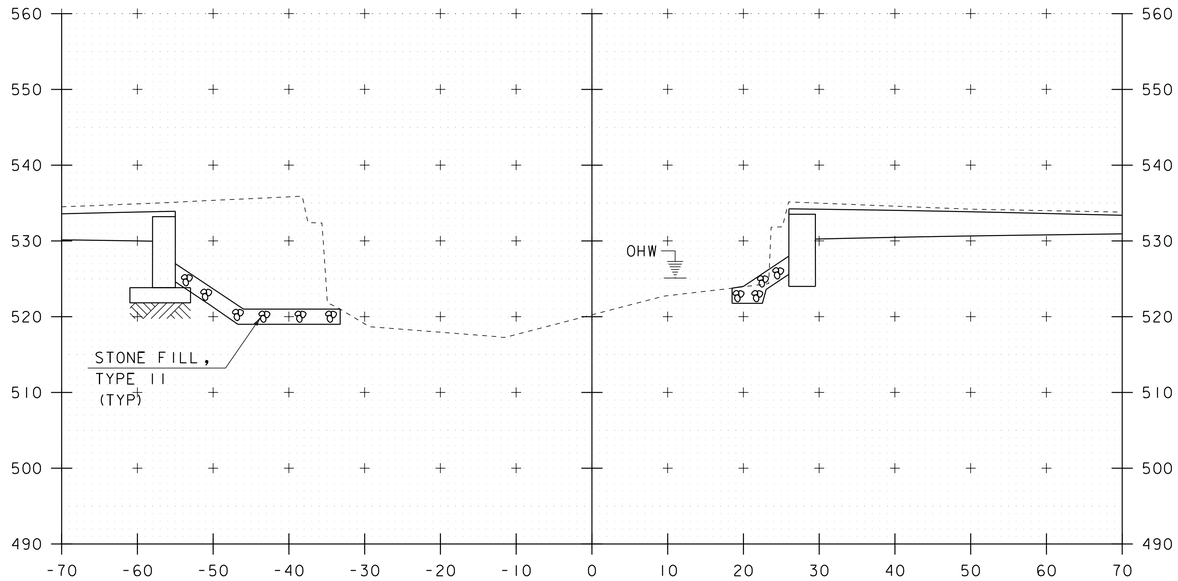

51+20

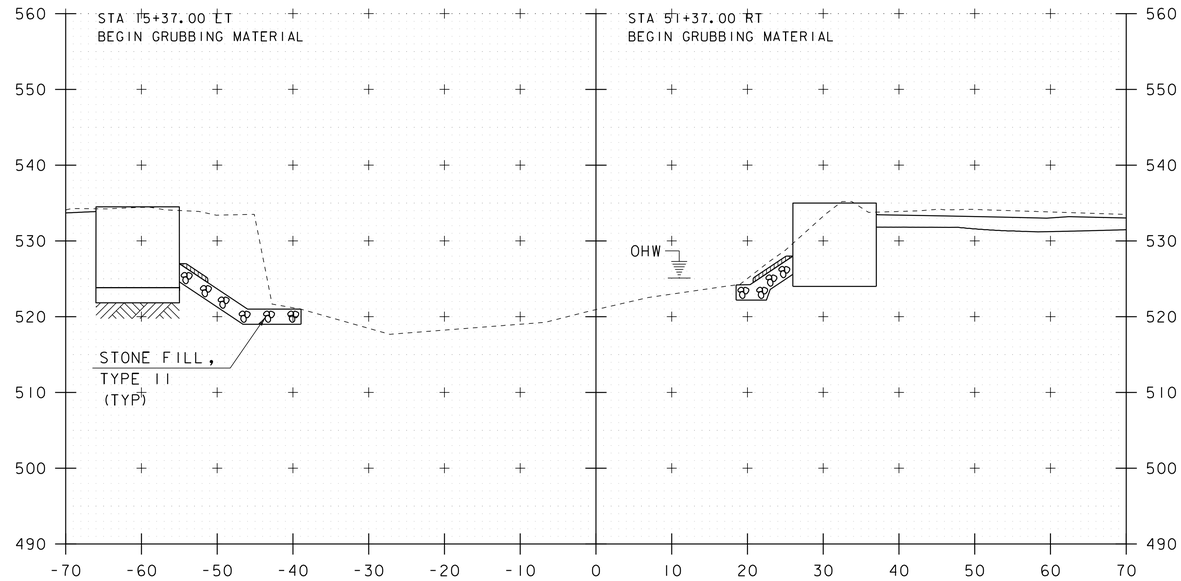

51+40

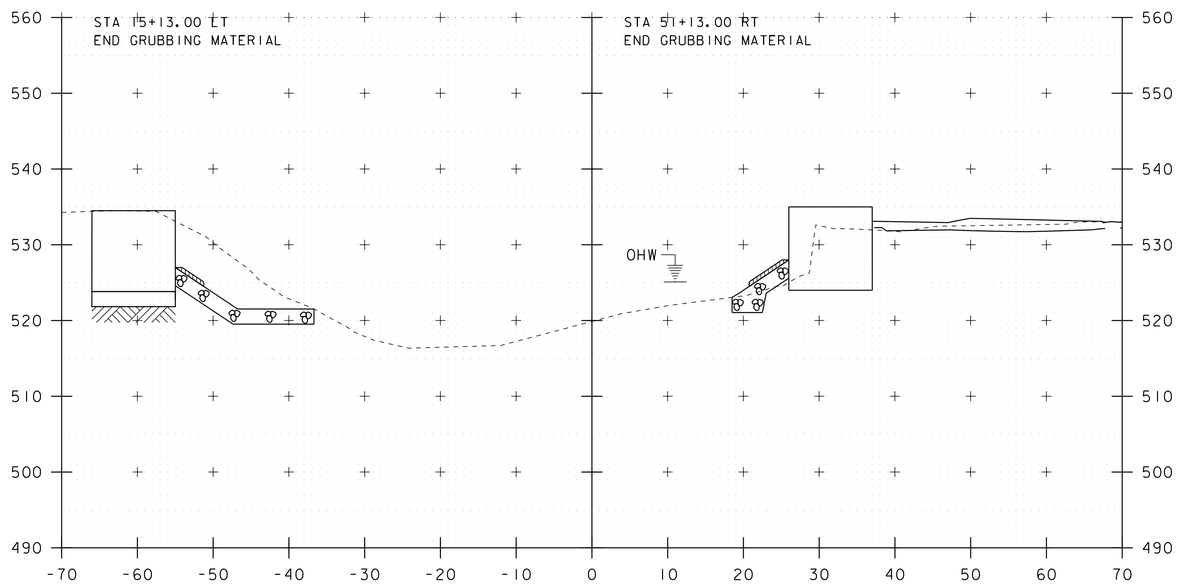

51+10

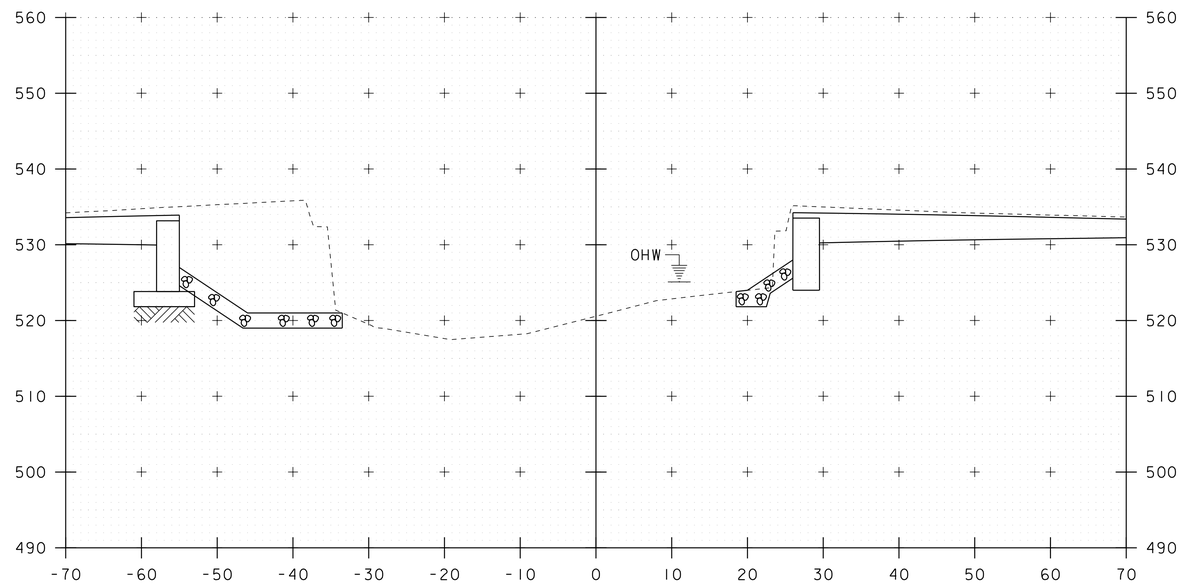

51+30

STA. 51+10 TO STA. 51+40

PROJECT NAME: MONTPELIER	
PROJECT NUMBER: BO 1446 (36)	
FILE NAME: sl3j082xsl.dgn	PLOT DATE: 30-JUL-2015
PROJECT LEADER: C. W. CARLSON	DRAWN BY: M. LONGSTREET
DESIGNED BY: H. SALLS	CHECKED BY: H. SALLS
CHANNEL CROSS SECTIONS 2	SHEET 37 OF 44

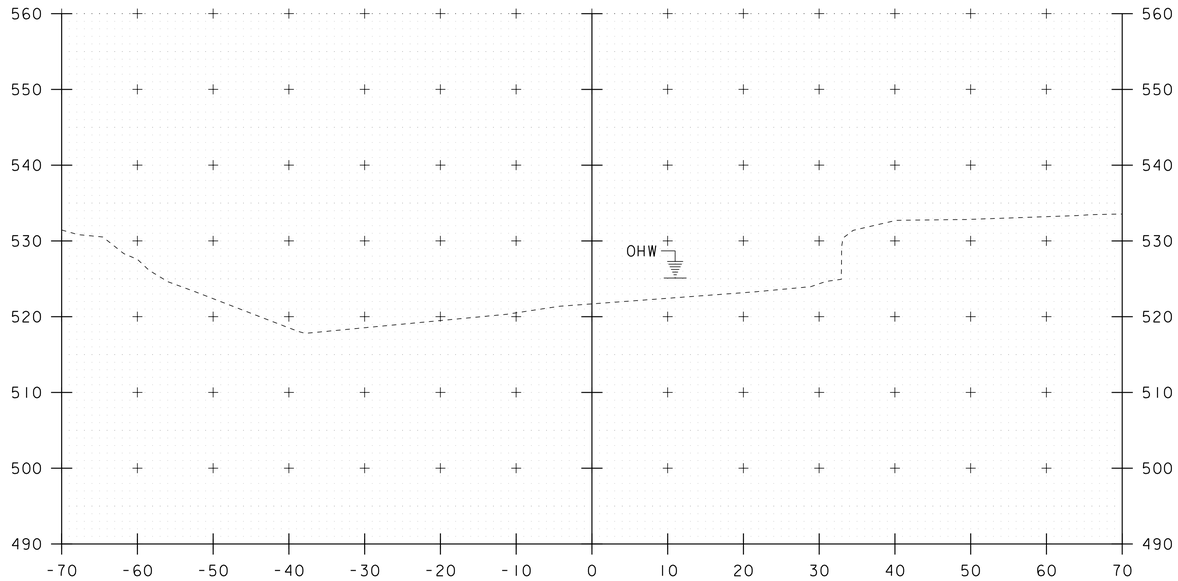

51+75

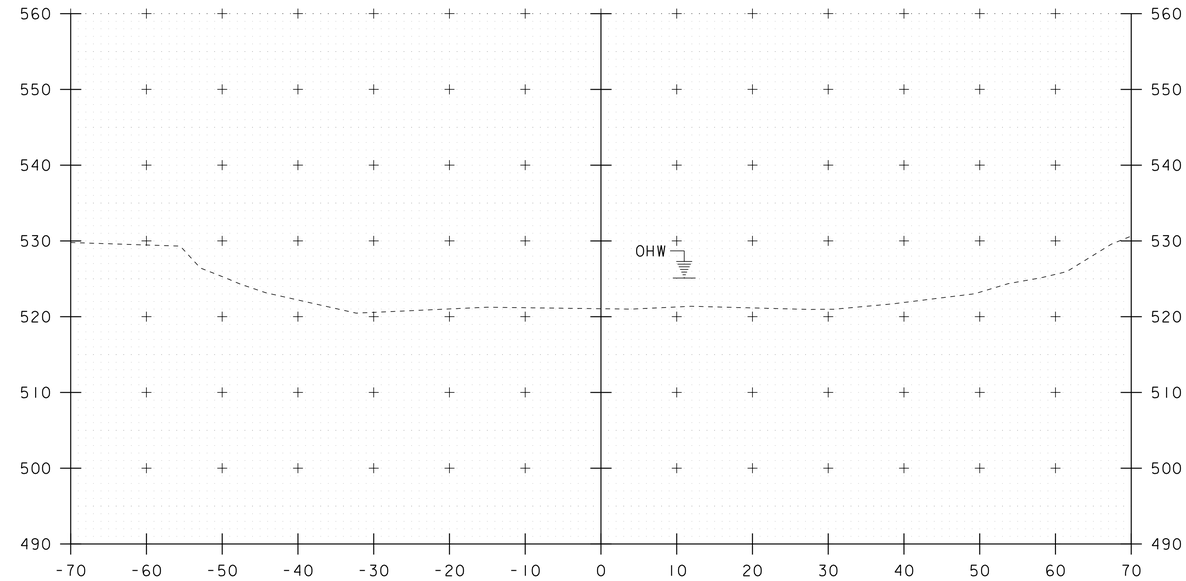

52+25

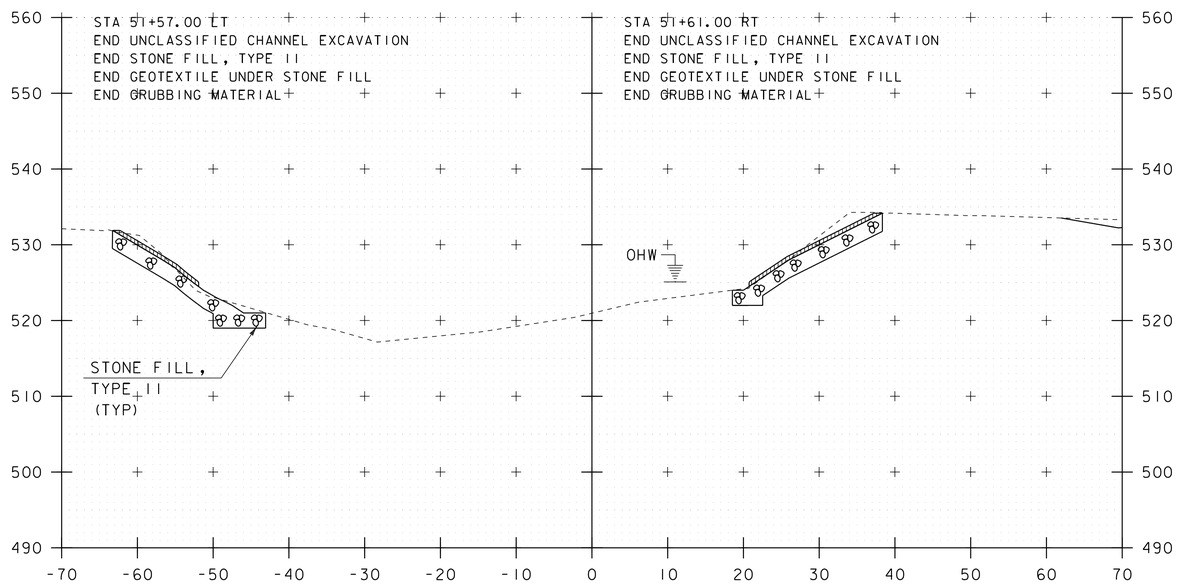

51+50

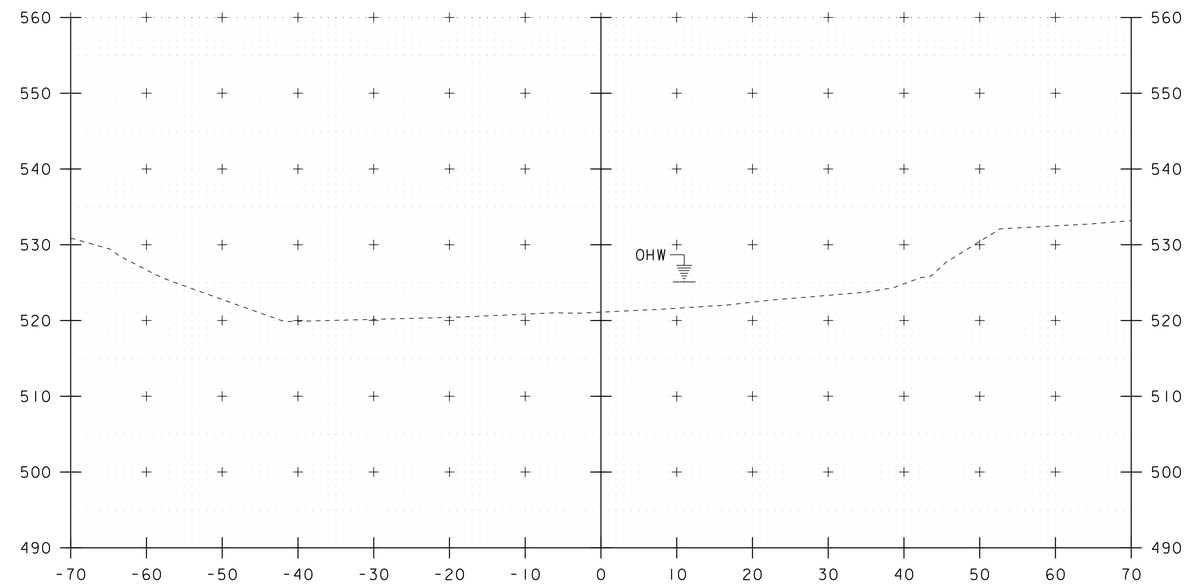

52+00

STA. 51+50 TO STA. 52+25

PROJECT NAME: MONTPELIER	
PROJECT NUMBER: BO 1446 (36)	
FILE NAME: sl3j082xsl.dgn	PLOT DATE: 30-JUL-2015
PROJECT LEADER: C. W. CARLSON	DRAWN BY: M. LONGSTREET
DESIGNED BY: H. SALLS	CHECKED BY: H. SALLS
CHANNEL CROSS SECTIONS 3	SHEET 38 OF 44

EPSC PLAN NARRATIVE

1.1 PROJECT DESCRIPTION

THIS PROJECT INVOLVES THE REMOVAL OF BRIDGE No 13 ON TOWN HIGHWAY 130, CUMMINGS STREET IN MONTPELIER. THE PROPOSED BRIDGE WILL BE A CONCRETE AND STEEL COMPOSITE STRUCTURE SPANNING 85 FEET OVER THE NORTH BRANCH OF THE WINOOSKI RIVER. THE PROJECT IS LOCATED APPROXIMATELY 200 FEET FROM TH-5 (VT-12) IN MONTPELIER. THE PROPOSED SPAN IS APPROXIMATELY 15 FEET LONGER THEN THE EXISTING STRUCTURE.

NOTE: AREA OF DISTURBANCE INCLUDES LIMITS OF EARTH DISTURBANCE WITHIN THE PROJECT AREA, AS WELL AS WASTE, BORROW AND STAGING AREAS, AND OTHER EARTH DISTURBING ACTIVITIES WITHIN OR DIRECTLY ADJACENT TO THE PROJECT LIMITS AS SHOWN ON THE ATTACHED EPSC PLAN.

TOTAL AREA OF DISTURBANCE AS SHOWN ON THE ATTACHED EPSC PLAN IS APPROXIMATELY 0.40 ACRES.

IT IS ANTICIPATED THAT THIS PROJECT WILL LAST ONE CONSTRUCTION SEASON.

1.2 SITE INVENTORY

1.2.1 TOPOGRAPHY
THE TOPOGRAPHY OF THE AREA IS A SHALLOW RIVER VALLEY THAT IS MOSTLY WELL ESTABLISHED FOREST WITH OCCASIONAL OPEN AREAS AND RESIDENTIAL USAGE. CUMMINGS STREET CONTAINS RESIDENTIAL HOUSES ALONG WITH DRIVES, PARKING AREAS, AND LAWN ALONG THE PROJECT SITE. THERE ARE RESIDENCES IN VERY CLOSE PROXIMITY TO THE PROJECT ON THE SOUTH SIDE OF THE BRIDGE.

1.2.2 DRAINAGE, WATERWAYS, BODIES OF WATER, AND PROXIMITY TO NATURAL OR MAN-MADE WATER FEATURES
THE WEST BRACH OF THE WINOOSKI IS THE ONLY WATER SOURCE ON THE PROJECT SITE. THE RIVER IS CLASSIFIED AS STEEP, SINUOUS, NARROW, WITH A CONFINED AND ARMORED CHANNEL AT THE SITE. THE STREAM BED CONSISTS OF GRAVEL, COBBLES AND BOULDERS. THE TRIBUTARY AREA AT THE BRIDGE CROSSING IS 76.9 MILES^2. THERE ARE A NUMBER OF DROP INLETS ON SITE DRAINING FROM THE ROADWAY TO THE RIVER.

1.2.3 VEGETATION
THE VEGETATION IN THE PROJECT AREA CONSISTS OF HARDWOOD TREES AND UNDERGROWTH. THE IMPACT TO VEGETATION WILL BE LIMITED TO THAT WHICH IS DIRECTLY AFFECTED BY REPLACEMENT OF THE PROPOSED BRIDGE. UPON PROJECT COMPLETION, THE CHANNEL WILL BE ARMORED WITH STONE FILL TYPE II AS SPECIFIED ON THE PLANS. DISTURBED VEGETATION WILL BE REESTABLISHED WITH STANDARD SEED AND MULCH PRACTICES.

1.2.4 SOILS
ALL SOIL DATA CAME FROM THE U.S. DEPARTMENT OF AGRICULTURE SOIL CONSERVATION SERVICE FOR THE COUNTY OF WASHINGTON, VERMONT. SOILS ON THE PROJECT SITE ARE:

- LAMOINE SILT LOAM 3%-8% SLOPES POTENTIALLY HIGHLY ERODIBLE, K = 0.32
- RUMNEY FINE SANDY LOAM 0%-2% SLOPES NOT HIGHLY ERODIBLE, K = 0.24
- SUNDAY FINE SAND 0%-3% SLOPES NOT HIGHLY ERODIBLE, K = 0.15
- URBAN LAND-UDIPSAMMENTS COMPLEX, OCCASIONALLY FLOODED,
- UNKNOWN SLOPES NOT HIGHLY ERODIBLE, K = 0.15

1.2.5 SENSITIVE RESOURCE AREAS
CRITICAL HABITATS: NO
HISTORICAL OR ARCHEOLOGICAL AREAS: YES (SEE EPSC EXISTING LAYOUT FOR LOCATIONS)
PRIME AGRICULTURAL LAND: NO
THREATENED AND ENDANGERED SPECIES: NO
WATER RESOURCE: WEST BRANCH OF THE WINOOSKI RIVER
WETLANDS: YES (SEE EPSC EXISTING LAYOUT FOR LOCATION)

1.3 RISK EVALUATION

THIS PROJECT DOES NOT FALL UNDER THE JURISDICTION OF GENERAL PERMIT 3-9020 FOR STORM WATER RUNOFF FROM CONSTRUCTION SITES FOR LOW RISK PROJECTS. ANY MODIFICATIONS TO THE PROJECT THAT INCREASE THE RISK TO ENVIRONMENTAL RESOURCES SHALL BE EVALUATED IN ACCORDANCE WITH THE PERMIT REQUIREMENTS. THE CONTRACTOR WILL BE RESPONSIBLE FOR ANY ADDITIONAL PERMITTING.

1.4 EROSION PREVENTION AND SEDIMENT CONTROL

THE EROSION CONTROL PLANS ARE MEANT AS A GUIDELINE FOR PREVENTING EROSION AND CONTROLLING SEDIMENT TRANSPORT. THE PRINCIPLES OUTLINED IN THIS NARRATIVE CONSIST OF APPLYING MEASURES THROUGHOUT CONSTRUCTION OF THE PROJECT IN ORDER TO MINIMIZE SEDIMENT TRANSPORT TO THE RECEIVING WATERS. THE MEASURES INCLUDE STABILIZATION AND STRUCTURAL PRACTICES, STORM WATER CONTROLS AND OTHER POLLUTION PREVENTION PRACTICES. THEY HAVE BEEN PROPOSED BY THE DESIGNER AS A BASIS FOR PROTECTING RESOURCES AND WILL NEED TO BE BUILT UPON BASED ON THE SPECIFIC MEANS AND METHODS OF THE CONTRACTOR. REFER TO THE LOW RISK SITE HANDBOOK AND APPROPRIATE DETAIL SHEETS FOR SPECIFIC GUIDANCE AND CONSTRUCTION DETAILING.

ALL MEASURES SHALL BE REGULARLY MAINTAINED AND SHALL BE CHECKED FOR SEDIMENT BUILD-UP. SEDIMENT SHALL BE DISPOSED OF AT AN APPROVED SITE WHERE IT WILL NOT BE SUBJECT TO EROSION.

1.4.1 MARK SITE BOUNDARIES
SITE BOUNDARIES AND AREAS CONSTRUCTION EQUIPMENT CAN ACCESS SHALL BE DELINEATED.

PROJECT DEMARCATION FENCING (PDF) SHALL BE USED TO PHYSICALLY MARK SITE BOUNDARIES.

1.4.2 LIMIT DISTURBANCE AREA
PREVENTING INITIAL SOIL EROSION BY MINIMIZING THE EXPOSED AREA IS MUCH MORE EFFECTIVE THAN TREATING ERODED SEDIMENT. EARTH DISTURBANCE CAN BE MINIMIZED THROUGH CONSTRUCTION PHASING BY ONLY OPENING UP EARTH AS NECESSARY. THIS CAN LIMIT THE AREA THAT WILL BE DISTURBED AND EXPOSED TO EROSION. EMPLOY TEMPORARY CONSTRUCTION STABILIZATION PRACTICES IN INCREMENTAL STAGES AS PHASES CHANGE. FOR PROJECTS WHICH FALL UNDER THE CONSTRUCTION GENERAL PERMIT, ONLY THE ACREAGE LISTED ON THE PERMIT AUTHORIZATION MAY BE EXPOSED AT ANY GIVEN TIME.

MAINTAINING VEGETATED BUFFERS ALONG STREAM BANKS, WETLANDS OR OTHER SENSITIVE AREAS IS A CRUCIAL EROSION AND SEDIMENT CONTROL MEASURE THAT SHOULD BE ESTABLISHED WHEREVER POSSIBLE.

1.4.3 SITE ENTRANCE/EXIT STABILIZATION
TRACKING OF SEDIMENT ONTO PUBLIC HIGHWAYS SHALL BE MINIMIZED TO REDUCE THE POTENTIAL FOR RUNOFF ENTERING RECEIVING WATERS. INSTALLATION SHALL COINCIDE WITH THE CONTRACTORS PROGRESS SCHEDULE.

STABILIZED CONSTRUCTION ENTRANCES SHALL BE INSTALLED AS PROPOSED ON THE EPSC PLAN AND ANYWHERE EQUIPMENT WILL BE GOING FROM AREAS OF EXPOSED SOILS TO PAVED SURFACES.

1.4.4 INSTALL SEDIMENT BARRIERS
SEDIMENT BARRIERS SHALL BE UTILIZED TO INTERCEPT RUNOFF AND ALLOW SUSPENDED SEDIMENT TO SETTLE OUT. THEY SHALL BE INSTALLED PRIOR TO ANY UP SLOPE WORK.

SILT FENCE, FILTER CURTAIN AND DROP INLET PROTECTION WILL BE INSTALLED AS PROPOSED ON THE EPSC PLAN.

1.4.5 DIVERT UPLAND RUNOFF
DIVERSIONARY MEASURES SHALL BE USED TO INTERCEPT RUNOFF FROM ABOVE THE CONSTRUCTION AND DIRECT IT AROUND THE DISTURBED AREA SO THAT CLEAN WATER DOES NOT BECOME MUDDIED WHILE TRAVELING OVER EXPOSED SOILS ON THE CONSTRUCTION SITE.

THE PROJECT AREA IS RELATIVELY FLAT. THEREFORE IT IS NOT ANTICIPATED THAT DIVERSION MEASURES WILL BE NECESSARY.

1.4.6 SLOW DOWN CHANNELIZED RUNOFF
CHECK STRUCTURES SHALL BE UTILIZED TO REDUCE THE VELOCITY, AND THUS THE EROSIVE POTENTIAL, OF CONCENTRATED FLOW IN CHANNELS.

1.4.7 CONSTRUCT PERMANENT CONTROLS
PERMANENT STORM WATER TREATMENT DEVICES SHALL BE INSTALLED AS SHOWN ON THE PLANS AND IN ACCORDANCE WITH PERMIT CONDITIONS.

1.4.8 STABILIZE EXPOSED SOILS DURING CONSTRUCTION
ALL AREAS OF DISTURBANCE MUST HAVE TEMPORARY STABILIZATION IN PLACE WITHIN 48 HOURS OF DISTURBANCE OR IN ACCORDANCE WITH THE CONSTRUCTION GENERAL PERMIT 3-9020 AUTHORIZATION.

SURFACE ROUGHENING OF ALL EXPOSED SLOPES, COMBINED WITH TEMPORARY MULCHING, SHALL BE UTILIZED ON A REGULAR BASIS. BIODEGRADABLE EROSION CONTROL MATTING OR AN EQUIVALENT SHALL BE USED TO STABILIZE ALL SLOPES STEEPER THAN 1:3.

THE FORECAST OF RAINFALL EVENTS SHALL TRIGGER IMMEDIATE PROTECTION OF EXPOSED SOILS.

1.4.9 WINTER STABILIZATION
VARIOUS MEASURES SPECIFIC TO WINTER MAY BE NECESSARY SHOULD THE PROJECT EXTEND INTO WINTER (OCTOBER 15 THROUGH APRIL 15). REFER TO THE LOW RISK SITE HANDBOOK FOR GUIDANCE.

1.4.10 STABILIZE SOIL AT FINAL GRADE
EXPOSED SOIL MUST BE STABILIZED WITHIN 48 HOURS OF REACHING FINAL GRADE.

SEED, MULCH, FERTILIZER AND LIME SHALL BE USED TO ESTABLISH PERMANENT VEGETATION. FOR SLOPES STEEPER THAN 1:3, BIODEGRADABLE EROSION CONTROL MATTING OR AN EQUIVALENT SHALL BE USED INSTEAD OF MULCH.

1.4.12 INSPECT YOUR SITE
INSPECT THE PROJECT SITE BASED ON SPECIAL PROVISION REQUIREMENTS OR CONSTRUCTION GENERAL PERMIT AUTHORIZATION STIPULATIONS.

1.5 SEQUENCE AND STAGING

THIS SECTION WILL BE DEVELOPED BY THE CONTRACTOR USING THE GUIDANCE OUTLINED IN THE VTRANS EPSC PLAN CONTRACTOR CHECKLIST.

1.5.1 CONSTRUCTION SEQUENCE

1.5.2 OFF-SITE ACTIVITIES
IN ADDITION TO THE CONTRACTOR CHECKLIST ANY ACTIVITIES OUTSIDE THE CONSTRUCTION LIMITS SHALL FOLLOW SPECIFICATION 105.25- 105.29 OF THE STANDARD SPECIFICATIONS FOR CONSTRUCTION.

1.5.3 UPDATES

LAMOINE SILT LOAM
3%-8% SLOPES
POTENTIALLY HIGHLY ERODIBLE
K = 0.32

RUMNEY FINE SANDY LOAM
0%-2% SLOPES
NOT HIGHLY ERODIBLE
K = 0.24

SUNDAY FINE SAND
0%-3% SLOPES
NOT HIGHLY ERODIBLE
K = 0.15

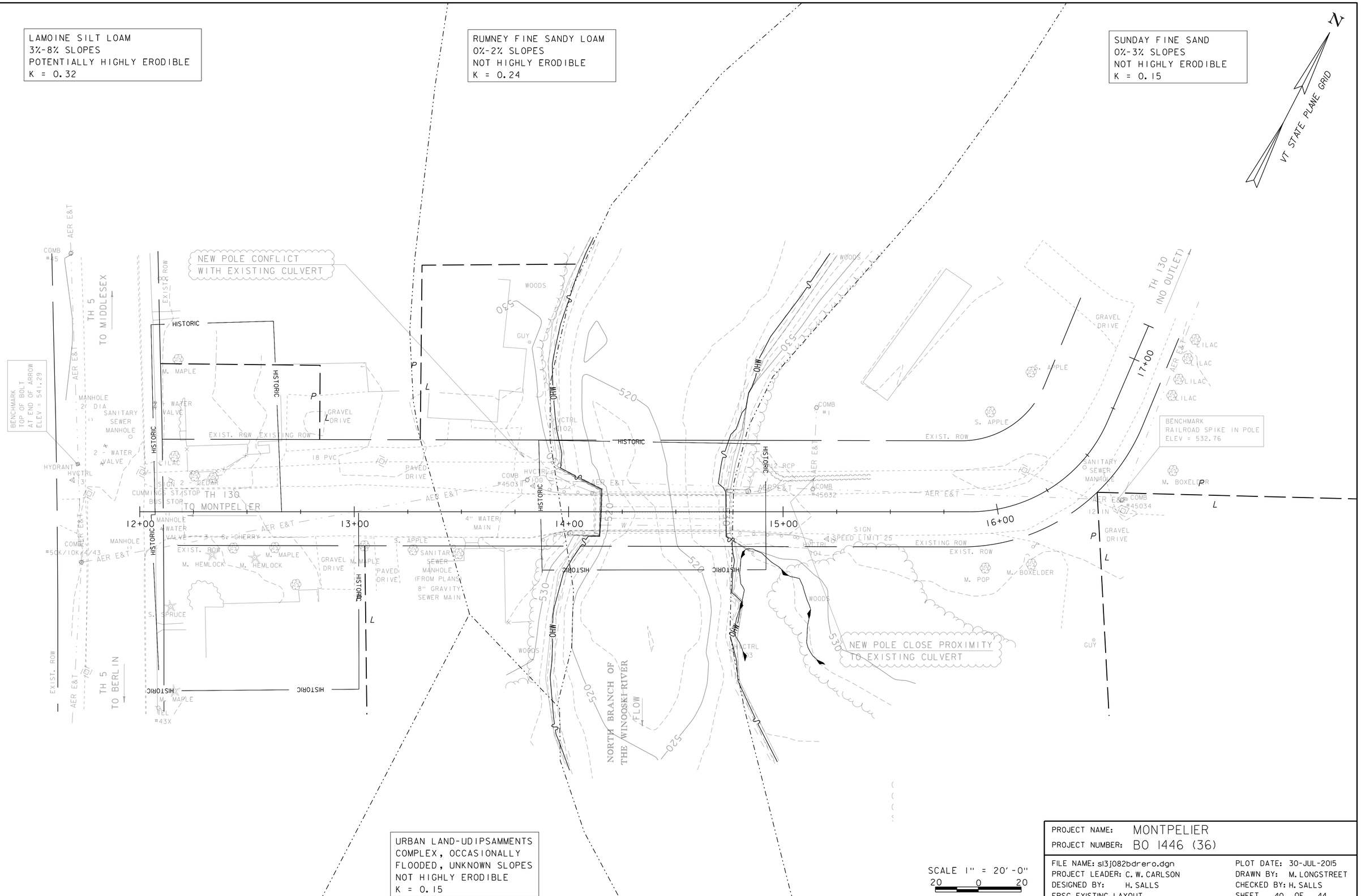

URBAN LAND-UDIPSAMMENTS
COMPLEX, OCCASIONALLY
FLOODED, UNKNOWN SLOPES
NOT HIGHLY ERODIBLE
K = 0.15

SCALE 1" = 20'-0"
20 0 20

PROJECT NAME: MONTPELIER	
PROJECT NUMBER: BO 1446 (36)	
FILE NAME: sl3j082bdrero.dgn	PLOT DATE: 30-JUL-2015
PROJECT LEADER: C. W. CARLSON	DRAWN BY: M. LONGSTREET
DESIGNED BY: H. SALLS	CHECKED BY: H. SALLS
EPSC EXISTING LAYOUT	SHEET 40 OF 44

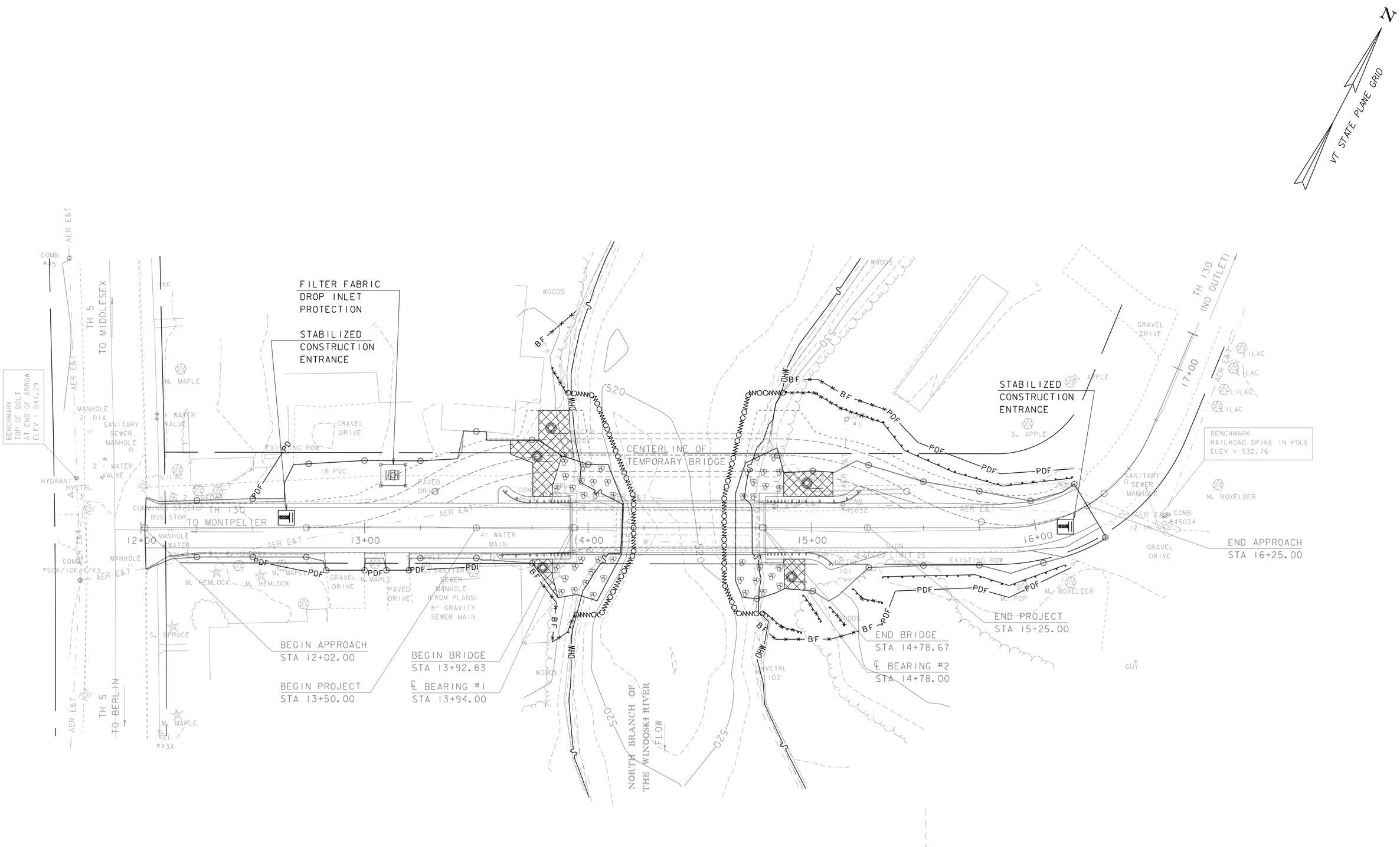

SCALE 1" = 20'-0"
20 0 20

PROJECT NAME: MONTPELIER	
PROJECT NUMBER: BO 1446 (36)	
FILE NAME: sl3j082bdrero.dgn	PLOT DATE: 30-JUL-2015
PROJECT LEADER: C. W. CARLSON	DRAWN BY: M. LONGSTREET
DESIGNED BY: H. SALLS	CHECKED BY: H. SALLS
EPSC CONSTRUCTION LAYOUT	SHEET 41 OF 44

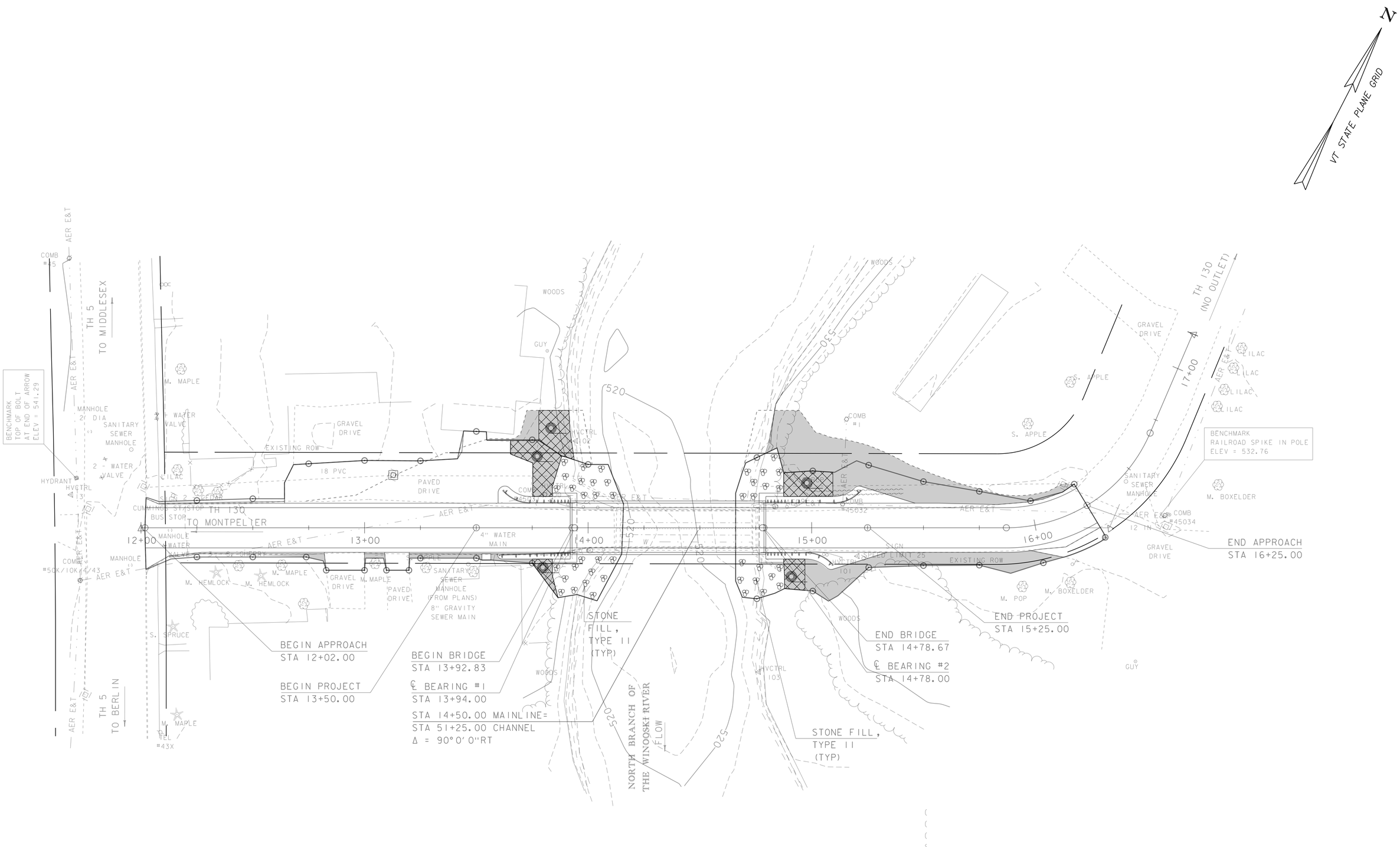

SCALE 1" = 20'-0"
20 0 20

PROJECT NAME: MONTPELIER	
PROJECT NUMBER: BO 1446 (36)	
FILE NAME: sl3j082bdrero.dgn	PLOT DATE: 30-JUL-2015
PROJECT LEADER: C. W. CARLSON	DRAWN BY: M. LONGSTREET
DESIGNED BY: H. SALLS	CHECKED BY: H. SALLS
EPSC FINAL LAYOUT	SHEET 42 OF 44

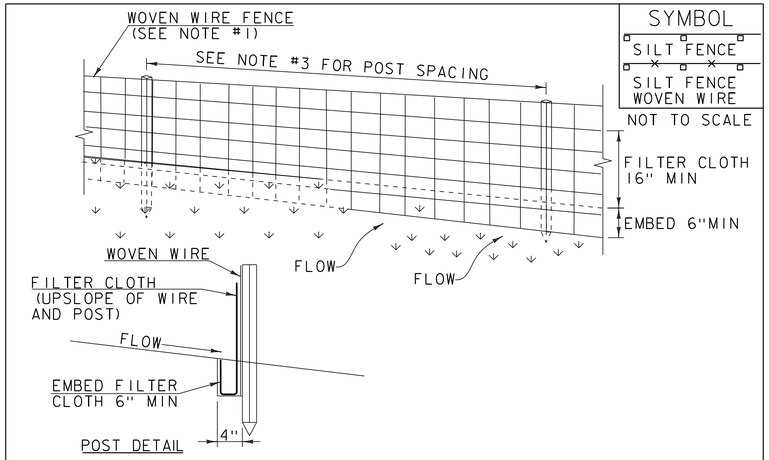

SYMBOL

SILT FENCE

SILT FENCE WOVEN WIRE

NOT TO SCALE

CONSTRUCTION SPECIFICATIONS

1. WOVEN WIRE REINFORCED FENCE IS REQUIRED WITHIN 100' UPSLOPE OF RECEIVING WATERS WHEN THE PROJECT FALLS UNDER A CONSTRUCTION STORMWATER PERMIT. WOVEN WIRE SHALL BE A MIN. 14 GAUGE WITH A 6" MAX. MESH OPENING.
2. FILTER CLOTH SHALL BE EITHER FILTER X, MIRAFI100X, STABILINKA T140N OR APPROVED EQUIVALENT.
3. POST SPACING FOR WIRE-BACKED FENCE SHALL BE 10' MAXIMUM. FOR FILTER-CLOTH FENCE, WHEN ELONGATION IS >50%, POST SPACING SHALL NOT EXCEED 4' AND WHEN ELONGATION IS <50%, POST SPACING SHALL NOT EXCEED 6'.
4. WOVEN WIRE FENCE IS TO BE FASTENED SECURELY TO FENCE POSTS WITH WIRE TIES. FILTER CLOTH IS TO BE FASTENED SECURELY TO WOVEN WIRE FENCE WITH TIES SPACED EVERY 24" AT TOP AND MID SECTION.
5. WHEN TWO SECTIONS OF FILTER CLOTH ADJOIN EACH OTHER THEY SHALL BE OVER-LAPPED BY 6" AND FOLDED.
6. MAINTENANCE SHALL BE PERFORMED AS NEEDED AND MATERIAL REMOVED WHEN SEDIMENT REACHES HALF OF FABRIC HEIGHT.

ADAPTED FROM DETAILS PROVIDED BY: NEW YORK STATE DEC
ORIGINALLY DEVELOPED BY USDA-NRCS
VERMONT DEPARTMENT OF ENVIRONMENTAL CONSERVATION

SILT FENCE

NOTES:
REFER TO "THE VERMONT STANDARDS & SPECIFICATIONS FOR EROSION PREVENTION & SEDIMENT CONTROL -2006- " FROM THE VT AGENCY OF NATURAL RESOURCES FOR ADDITIONAL GUIDANCE.

THIS WORK SHALL BE PERFORMED IN ACCORDANCE WITH SECTION 649 AND AS SHOWN IN THE PLANS FOR GEOTEXTILE FOR SILT FENCE (PAY ITEM 649.51) OR GEOTEXTILE FOR SILT FENCE, WOVEN WIRE REINFORCED (PAY ITEM 649.515).

REVISIONS	
MARCH 21, 2008	WHF
DECEMBER 11, 2008	WHF
JANUARY 13, 2009	WHF

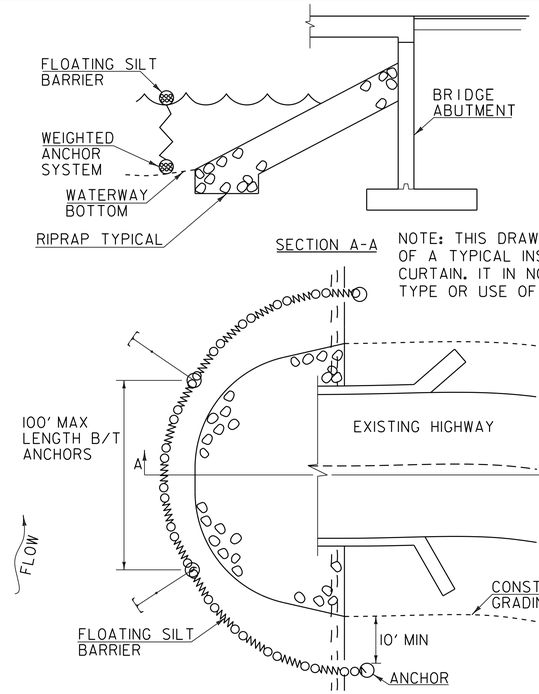

NOTE: THIS DRAWING IS A DEPICTION OF A TYPICAL INSTALLATION OF FILTER CURTAIN. IT IN NO WAY DEFINES THE TYPE OR USE OF COFFERDAM IF USED.

SYMBOL

NOT TO SCALE

CONSTRUCTION SPECIFICATIONS

1. FILTER CURTAIN SHALL NOT BE PLACED ACROSS A FLOWING WATERWAY, OR IN A WATERWAY WITH STREAM VELOCITIES GREATER THAN 1.5 FEET/SECOND.
2. MAXIMUM 100' LENGTH BETWEEN ANCHORS.
3. LAST SECTION SHALL TERMINATE A MINIMUM OF 10' BEYOND LIMIT OF DISTURBANCE.
4. THE WEIGHTED ANCHOR SYSTEM SHALL BE A TYPE WHICH ALLOWS THE CURTAIN TO CONFORM TO THE BOTTOM OF THE WATERWAY.
5. THE CURTAIN SHALL BE REMOVED BY SLOWLY PULLING TOWARD THE SHORE MINIMIZING THE ESCAPE OF SEDIMENTS INTO WATERWAY.

FILTER CURTAIN

THIS WORK SHALL BE PERFORMED IN ACCORDANCE WITH SECTION 649 FOR GEOTEXTILE FOR FILTER CURTAIN (PAY ITEM 649.61).

REVISIONS	
APRIL 1, 2008	WHF
JANUARY 13, 2009	WHF
SEPTEMBER 4, 2009	WHF

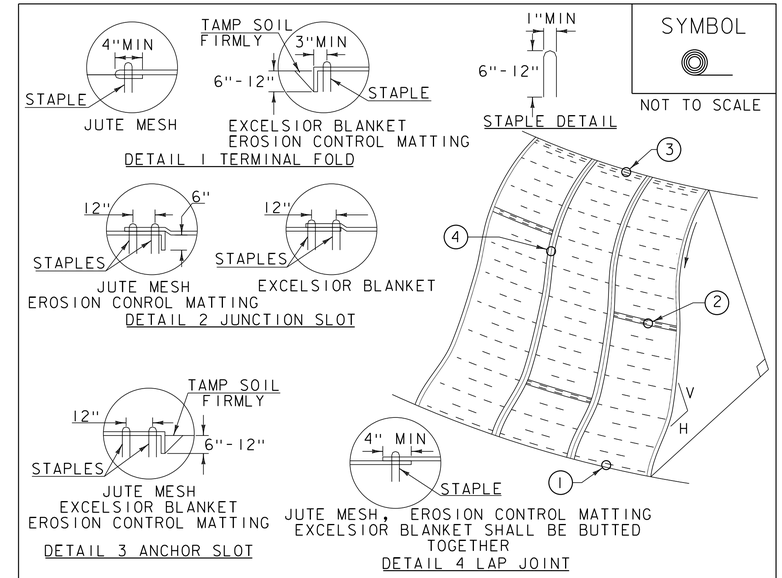

SYMBOL

NOT TO SCALE

CONSTRUCTION SPECIFICATIONS

1. APPLY TO SLOPES GREATER THAN 3H:1V OR WHERE NECESSARY TO AID IN ESTABLISHING VEGETATION.
2. APPLY FERTILIZER, LIME SEED PRIOR TO PLACING MATTING.
3. STAPLES ARE TO BE PLACED ALTERNATELY, IN COLUMNS APPROXIMATELY 2' APART AND IN ROWS APPROXIMATELY 3' APART. APPROXIMATELY 175 STAPLES ARE REQUIRED PER 4'X225' ROLL OF MATERIAL AND 125 STAPLES ARE REQUIRED PER 4'X150' ROLL OF MATERIAL.
4. DISTURBED AREAS SHALL BE SMOOTHLY GRADED. EROSION CONTROL MATERIAL SHALL BE PLACED LOOSELY OVER GROUND SURFACE. DO NOT STRETCH.
5. ALL TERMINAL ENDS AND TRANSVERSE LAPS SHALL BE STAPLED AT APPROXIMATELY 12" INTERVALS.

ADAPTED FROM DETAILS PROVIDED BY: NEW YORK STATE DEC
ORIGINALLY DEVELOPED BY USDA-NRCS
VERMONT DEPARTMENT OF ENVIRONMENTAL CONSERVATION

ROLLED EROSION CONTROL PRODUCT (RECP) SIDE SLOPE

NOTES:
REFER TO "THE VERMONT STANDARDS & SPECIFICATIONS FOR EROSION PREVENTION & SEDIMENT CONTROL -2006- " FROM THE VT AGENCY OF NATURAL RESOURCES FOR ADDITIONAL GUIDANCE.
THIS WORK SHALL BE PERFORMED IN ACCORDANCE WITH SECTION 653 AND AS SHOWN IN THE PLANS FOR TEMPORARY EROSION MATTING (PAY ITEM 653.20) OR PERMANENT EROSION MATTING (PAY ITEM 653.21).

REVISIONS	
APRIL 16, 2007	JMF
JANUARY 13, 2009	WHF

PROJECT NAME: MONTPELIER
PROJECT NUMBER: BO 1446 (36)

FILE NAME: s13j082eroDet.dgn
PROJECT LEADER: C. W. CARLSON
DESIGNED BY: H. SALLS
EPSC DETAILS 1

PLOT DATE: 30-JUL-2015
DRAWN BY: M. LONGSTREET
CHECKED BY: H. SALLS
SHEET 43 OF 44

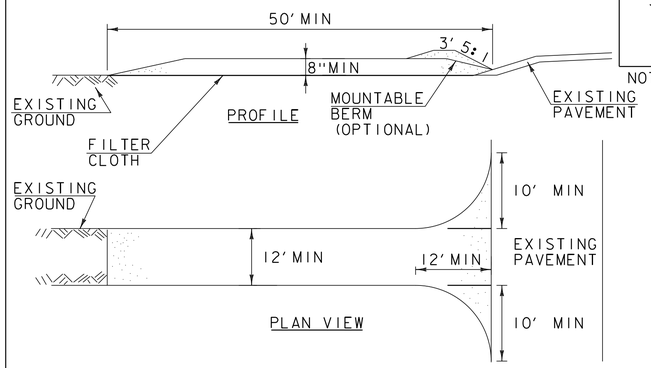

SYMBOL

NOT TO SCALE

CONSTRUCTION SPECIFICATIONS

1. STONE SIZE- USE 1-4" STONE, RECLAIMED OR RECYCLED CONCRETE EQUIVALENT.
2. LENGTH- NOT LESS THAN 50' (EXCEPT ON A SINGLE RESIDENCE LOT WHERE A 30' MINIMUM LENGTH APPLIES).
3. THICKNESS- NOT LESS THAN 8".
4. WIDTH- 12' MINIMUM, BUT NOT LESS THAN THE FULL WIDTH AT POINTS WHERE INGRESS OR EGRESS OCCURS. 24' IF SINGLE ENTRANCE TO SITE.
5. GEOTEXTILE MUST BE PLACED OVER THE ENTIRE AREA PRIOR TO PLACING STONE.
6. SURFACE WATER- ALL SURFACE WATER FLOWING OR DIVERTED TOWARD CONSTRUCTION ENTRANCES SHALL BE PIPED BENEATH THE ENTRANCE. IF PIPING IS IMPRACTICAL, A MOUNTABLE BERM WITH 5:1 SLOPES WILL BE PERMITTED.
7. MAINTENANCE- THE ENTRANCE SHALL BE MAINTAINED IN A CONDITION WHICH WILL PREVENT TRACKING OR FLOWING OF SEDIMENT ONTO PUBLIC RIGHTS-OF-WAY, ALL SEDIMENT SPILLED, DROPPED, WASHED OR TRACKED ONTO PUBLIC RIGHTS-OF-WAY MUST BE REMOVED IMMEDIATELY.
8. WHEN WASHING IS REQUIRED, IT SHALL BE DONE ON AN AREA STABILIZED WITH STONE AND WHICH DRAINS INTO AN APPROVED SEDIMENT TRAPPING DEVICE.
9. PERIODIC INSPECTION AND NEEDED MAINTENANCE SHALL BE PROVIDED ACCORDING TO PERMIT REQUIREMENTS.

ADAPTED FROM DETAILS PROVIDED BY: NEW YORK STATE DEC
ORIGINALLY DEVELOPED BY USDA-NRCS
VERMONT DEPARTMENT OF ENVIRONMENTAL CONSERVATION

STABILIZED CONSTRUCTION ENTRANCE

NOTES:
REFER TO "THE VERMONT STANDARDS & SPECIFICATIONS FOR EROSION PREVENTION & SEDIMENT CONTROL -2006- " FROM THE VT AGENCY OF NATURAL RESOURCES FOR ADDITIONAL GUIDANCE.

THIS WORK SHALL BE PERFORMED IN ACCORDANCE WITH SECTION 653 FOR VEHICLE TRACKING PAD (PAY ITEM 653.35) OR AS SPECIFIED IN THE CONTRACT.

REVISIONS	
MARCH 24, 2008	WHF
JANUARY 13, 2009	WHF

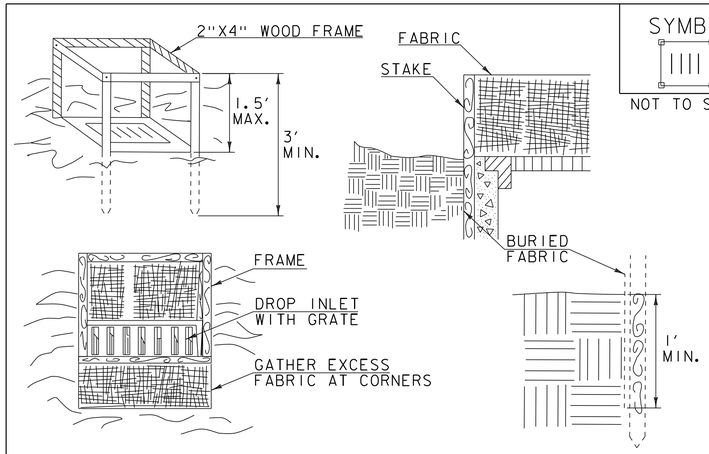

SYMBOL

NOT TO SCALE

CONSTRUCTION SPECIFICATIONS

1. FILTER FABRIC SHALL HAVE AN APPARENT OPENING SIZE OF 40-85. BURLAP MAY BE USED FOR SHORT TERM APPLICATIONS.
2. CUT FABRIC FROM A CONTINUOUS ROLL TO ELIMINATE JOINTS. IF JOINTS ARE NEEDED THEY WILL BE OVERLAPPED TO THE NEXT STAKE.
3. STAKE MATERIALS WILL BE STANDARD 2"x 4" WOOD OR EQUIVALENT METAL WITH A MINIMUM LENGTH OF 3'.
4. SPACE STAKES EVENLY AROUND INLET 3' APART AND DRIVE A MINIMUM 18" DEEP. SPANS GREATER THAN 3' MAY BE BRIDGED WITH THE USE OF WIRE MESH BEHIND THE FILTER FABRIC FOR SUPPORT.
5. FABRIC SHALL BE EMBEDDED 1' MINIMUM BELOW GROUND AND BACKFILLED. IT SHALL BE SECURELY FASTENED TO THE STAKES AND FRAME.
6. A 2" x 4" WOOD FRAME SHALL BE COMPLETED AROUND THE CREST OF THE FABRIC FOR OVER FLOW STABILITY.
7. MAXIMUM DRAINAGE AREA 1 ACRE

ADAPTED FROM DETAILS PROVIDED BY: NEW YORK STATE DEC
ORIGINALLY DEVELOPED BY USDA-NRCS
VERMONT DEPARTMENT OF ENVIRONMENTAL CONSERVATION

FILTER FABRIC DROP INLET PROTECTION

NOTES:
REFER TO "THE VERMONT STANDARDS & SPECIFICATIONS FOR EROSION PREVENTION & SEDIMENT CONTROL -2006- " FROM THE VT AGENCY OF NATURAL RESOURCES FOR ADDITIONAL GUIDANCE.

THIS WORK SHALL BE PERFORMED IN ACCORDANCE WITH SECTION 653 FOR INLET PROTECTION DEVICE, TYPE I (PAY ITEM 653.40).

REVISIONS	
MARCH 7, 2008	WHF
JANUARY 13, 2009	WHF

VAOT LOW GROW/FINE FESCUE MIX

LBS/AC						
WEIGHT	BROADCAST	HYDROSEED	NAME	LATIN NAME	GERM	PURITY
38%	57	95	CREEPING RED FESCUE	FESTUCA RUBRA VAR. RUBRA	90%	98%
29%	43.5	72.5	HARD FESCUE	FESTUCA LONGIFOLIA	85%	95%
15%	22.5	37.5	CHEWINGS FESCUE	FESTUCA RUBRA VAR. COMMUTATA	87%	95%
15%	22.5	37.5	ANNUAL RYEGRASS	LOLIUM MULTIFLORUM	90%	95%
3%	4.5	7.5	INERTS			
100%	150	250				

VAOT RURAL AREA MIX

LBS/AC						
WEIGHT	BROADCAST	HYDROSEED	NAME	LATIN NAME	GERM	PURITY
37.5%	22.5	45	CREEPING RED FESCUE	FESTUCA RUBRA VAR. RUBRA	85%	98%
37.5%	22.5	45	TALL FESCUE	FESTUCA ARUNDINACEA	90%	95%
5.0%	3	6	RED TOP	AGROSTIS GIGANTEA	90%	95%
15.0%	9	18	WHITE FIELD CLOVER	TRIFOLIUM REPENS	85%	98%
5.0%	3	6	ANNUAL RYE GRASS	LOLIUM MULTIFLORUM	85%	95%
100%	60	120				

GENERAL AMENDMENT GUIDANCE

FERTILIZER	LIME	
10/20/10	AG LIME	PELLITIZED
500 LBS/AC	2 TONS/AC	1 TONS/AC

CONSTRUCTION GUIDANCE

1. SEED MIX: THE CONTRACTOR SHALL COORDINATE WITH THE RESIDENT ENGINEER ON WHICH SEED MIX TO USE.
2. SEED MIX: USE AS INDICATED IN THE PLANS AND/OR FOR ALL ESTABLISHED UPLAND (NON WETLAND) AREAS DISTURBED BY THE CONTRACTOR.
3. ALL SEED MIXTURES: SHALL NOT HAVE A WEED CONTENT EXCEEDING 0.40% BY WEIGHT AND SHALL BE FREE OF ALL NOXIOUS SEED.
4. FERTILIZER AND LIMESTONE: SHALL FOLLOW RATES SHOWN ON PLAN OR AS DIRECTED BY THE ENGINEER.
5. HAY MULCH: TO BE PLACED ON EARTH SLOPES AT THE RATE OF 2 TONS/ACRE, ACHIEVE 90% GROUND COVER OR AS DIRECTED BY THE ENGINEER.
6. HYDROSEEDING: ALTHOUGH GUIDANCE IS GIVEN ABOVE THE SITE CONDITIONS AND THE TYPE OF HYDROSEED PROPOSED FOR USE WILL ULTIMATELY DICTATE THE AMOUNTS AND TYPES OF SOIL AMENDMENTS TO BE APPLIED.
7. TURF ESTABLISHMENT: PLACING SEED, FERTILIZER, LIME AND MULCH PRIOR TO SEPTEMBER 15 AND AFTER APRIL 15 CAN BETTER ENSURE A VIGOROUS GROWTH OF GRASS.

ADAPTED FROM VTRANS TECHNICAL LANDSCAPE MANUAL FOR ROADWAYS AND TRANSPORTATION FACILITIES

TURF ESTABLISHMENT

THIS WORK SHALL BE PERFORMED IN ACCORDANCE WITH SECTION 651 FOR SEED (PAY ITEM 651.15)

REVISIONS	
JANUARY 12, 2015	WHF

PROJECT NAME: MONTPELIER
PROJECT NUMBER: BO 1446 (36)

FILE NAME: s13j082eroDet.dgn
PROJECT LEADER: C. W. CARLSON
DESIGNED BY: H. SALLS
EPSC DETAILS 2

PLOT DATE: 30-JUL-2015
DRAWN BY: M. LONGSTREET
CHECKED BY: H. SALLS
SHEET 44 OF 44