STATE OF VERMONT
AGENCY OF TRANSPORTATION

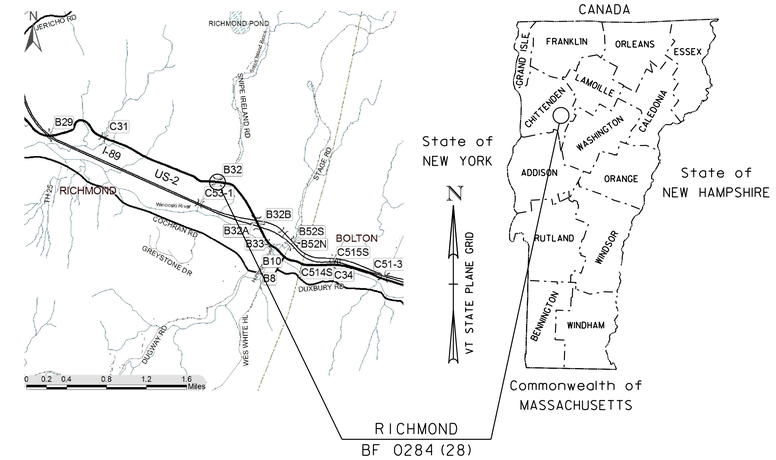

PROPOSED IMPROVEMENT
BRIDGE PROJECT

TOWN OF RICHMOND
COUNTY OF CHITTENDEN

ROUTE NO : US ROUTE 2, RURAL MAJOR COLLECTOR. BRIDGE #32

PROJECT LOCATION: 4.2 MILES EAST OF THE JUNCTION OF US ROUTE 2 AND VT ROUTE 117

PROJECT DESCRIPTION: REPLACEMENT OF THE EXISTING BRIDGE 32 INCLUDING APPROACH WORK

LENGTH OF STRUCTURE: 28.73 FEET
LENGTH OF ROADWAY: 321.27 FEET
LENGTH OF PROJECT: 350.00 FEET

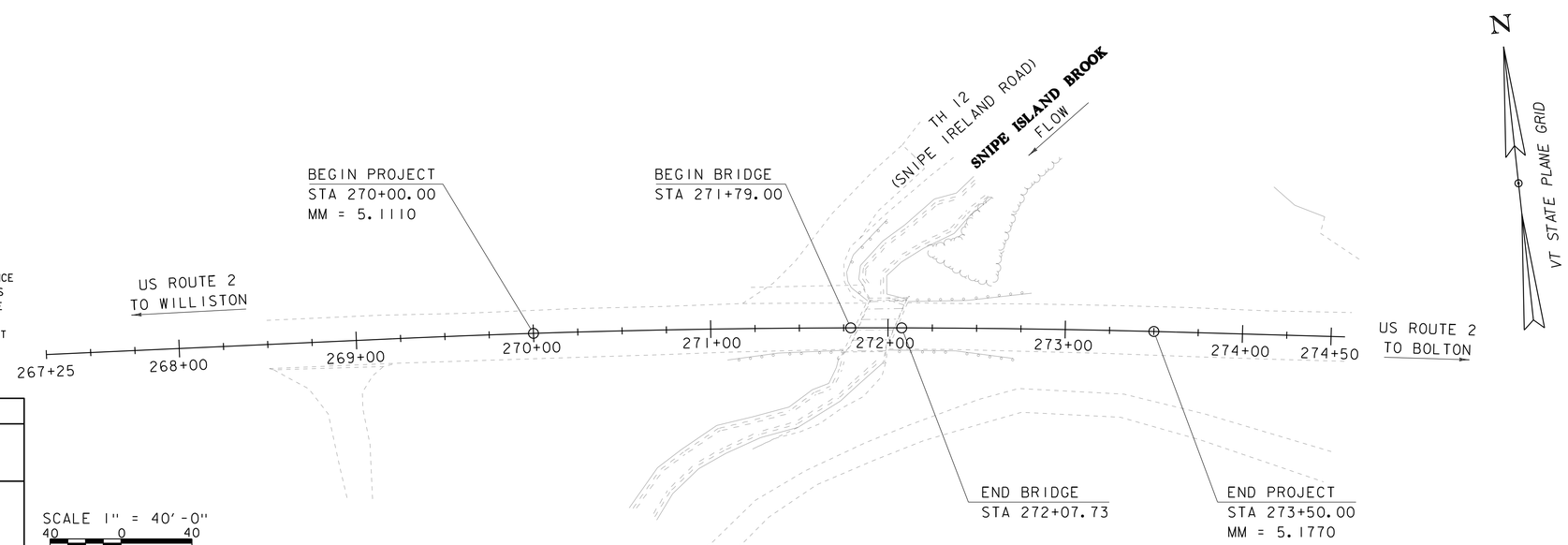

CONSTRUCTION IS TO BE CARRIED ON IN ACCORDANCE WITH THESE PLANS AND THE STANDARD SPECIFICATIONS FOR CONSTRUCTION DATED 2011, AS APPROVED BY THE FEDERAL HIGHWAY ADMINISTRATION ON JULY 20, 2011 FOR USE ON THIS PROJECT, INCLUDING ALL SUBSEQUENT REVISIONS AND SUCH REVISED SPECIFICATIONS AND SPECIAL PROVISIONS AS ARE INCORPORATED IN THESE PLANS.

QUALITY ASSURANCE PROGRAM : LEVEL 2

SURVEYED BY : L. ORVIS
SURVEYED DATE : 06/12/2013

DATUM
VERTICAL NAVD88
HORIZONTAL NAD 83(2011)

FINAL PLANS
16-JUN-2016

DIRECTOR OF PROJECT DELIVERY
APPROVED _____ DATE _____

PROJECT MANAGER : R. S. YOUNG

PROJECT NAME : RICHMOND
PROJECT NUMBER : BF 0284(28)

SHEET 1 OF 51 SHEETS

STATE OF VERMONT
AGENCY OF TRANSPORTATION

PRELIMINARY INFORMATION SHEET (CULVERT)

Version
LRFD

INDEX OF SHEETS

PLAN SHEETS

1	TITLE SHEET
2	PRELIMINARY INFORMATION SHEET
3	GENERAL NOTES
4 - 5	QUANTITY SHEETS
6	SYMBOLOGY LEGEND
7 - 8	TYPICAL SECTIONS
9	TIE SHEET
10	ALIGNMENT SHEET 1
11	ALIGNMENT SHEET 2
12	LAYOUT SHEET
13	MAINLINE PROFILE AND BANKING DIAGRAM
14	TH 12 PROFILE AND TYPICAL SECTION
15 - 16	UTILITY RELOCATION PLANS
17	SIGN AND PAVEMENT MARKINGS SHEET
18	TRAFFIC SIGN SUMMARY SHEET
19	RAIL LAYOUT SHEET
20	BORING INFORMATION SHEET
21 - 22	BORING LOGS
23	PILE CAP LAYOUT
24	PILE CAP 1 PLAN
25	PILE CAP 2 PLAN
26	PILE CAP REINFORCING PLAN
27	RIGID FRAME ELEVATION
28	APPROACH SLAB DETAILS
29 - 30	DETOUR PLANS
31	MATERIAL TRANSITION DETAIL
32 - 37	ROADWAY CROSS SECTIONS
38 - 41	CHANNEL CROSS SECTIONS
42 - 43	TH 12 CROSS SECTIONS
44	EPSC NARRATIVE
45	EPSC EXISTING SITE PLAN
46	EPSC PLAN
47	EPSC DETAILS
48	R.O.W. LAYOUT SHEET 1 OF 2
49	R.O.W. LAYOUT SHEET 2 OF 2
50	R.O.W. DETAIL SHEET

DETAIL SHEETS

SD-501.00	CONCRETE DETAILS AND NOTES	5/7/2010
SD-502.00	CONCRETE DETAILS AND NOTES	5/7/2010
SD-516.10	BRIDGE JOINT ASHPALTIC PLUG	5/7/2010
HSD-400.01	SAFETY EDGE DETAILS	3/29/2016

STANDARDS LIST

C-10	CURBING	02-11-2008
E-121	STANDARD SIGN PLACEMENT - CONVENTIONAL ROAD	08-08-1995
E-193	PAVEMENT MARKING DETAILS	08-18-1995
G-1	STEEL BEAM GUARDRAIL DETAILS (POST, DELINEATOR, TYPICALS)	02-10-2014
G-1D	STEEL BEAM GUARDRAIL DETAILS (END TERMINAL, ANCHOR, MEDIAN)	02-10-2014
S-360A	BRIDGE RAILING, GALVANIZED 2 RAIL BOX BEAM	04-23-2012
S-360B	GUARDRAIL APPROACH SECTION, GALVANIZED 2 RAIL BOX BEAM	04-23-2012
T-56	STANDARD SIGN PLACEMENT	10-26-2015
T-29	CONSTRUCTION SIGN DETAILS	08-06-2012
T-30	CONSTRUCTION SIGN DETAILS	08-06-2012
T-31	CONSTRUCTION SIGN DETAILS	08-06-2012
T-40	DELINEATORS AND MILEPOSTS	01-02-2013
T-42	BRIDGE NUMBER PLAQUE	04-09-2014
T-45	SQUARE TUBE SIGN POST AND ANCHOR	01-02-2013
T-70	VERMONT REGULATORY SIGN DETAILS	04-25-2016

FINAL HYDRAULIC REPORT

HYDROLOGIC DATA

Date: May 2015

DRAINAGE AREA : 5.2 sq. mi.
CHARACTER OF TERRAIN : Rural, mostly wooded, small ponds
STREAM CHARACTERISTICS : Sinuous and alluvial
NATURE OF STREAMBED : Gravel and sand

PEAK FLOW DATA

Q 2.33 =	200 cfs	Q 50 =	750 cfs
Q 10 =	450 cfs	Q 100 =	900 cfs
Q 25 =	600 cfs	Q 500 =	1260 cfs

DATE OF FLOOD OF RECORD: Unknown
ESTIMATED DISCHARGE: Unknown
WATER SURFACE ELEV.: Unknown
NATURAL STREAM VELOCITY : @ Q50 = 10.8 fps
ICE CONDITIONS : Light to moderate
DEBRIS: Light
DOES THE STREAM REACH MAXIMUM HIGHWATER ELEV. RAPIDLY? Yes
IS ORDINARY RISE RAPID? Yes
IS STAGE AFFECTED BY UPSTREAM OR DOWNSTREAM CONDITIONS? No
IF YES, DESCRIBE:

WATERSHED STORAGE: 2%
HEADWATERS:
UNIFORM: X
IMMEDIATELY ABOVE SITE:

EXISTING STRUCTURE INFORMATION

STRUCTURE TYPE: Concrete t-beam
YEAR BUILT: 1929
CLEAR SPAN(NORMAL TO STREAM): 22'
VERTICAL CLEARANCE ABOVE STREAMBED: 6'
WATERWAY OF FULL OPENING: 100 sq. ft.
DISPOSITION OF STRUCTURE: Remove and replace
TYPE OF MATERIAL UNDER SUBSTRUCTURE: See borings

WATER SURFACE ELEVATIONS AT:

Q2.33 =	313.8'	VELOCITY =	5.4 fps
Q10 =	316.0'	"	5.7 fps
Q25 =	316.4'	"	7.1 fps
Q50 =	317.0'	"	7.7 fps
Q100 =	318.5'	"	8.5 fps

LONG TERM STREAMBED CHANGES: None noted

IS THE ROADWAY OVERTOPPED BELOW Q100: Yes
FREQUENCY: Q100
RELIEF ELEVATION: 317.6'
DISCHARGE OVER ROAD @Q100: 55 cfs

UPSTREAM STRUCTURE

TOWN:	Richmond	DISTANCE:	4400'
HIGHWAY # :	TH 12	STRUCTURE #:	16
CLEAR SPAN:	12.3'	CLEAR HEIGHT:	7.8'
YEAR BUILT:	1969	FULL WATERWAY:	
STRUCTURE TYPE:	CGMPPA		

DOWNSTREAM STRUCTURE

TOWN:	Richmond	DISTANCE:	1500'
HIGHWAY # :	I-89	STRUCTURE #:	53-1
CLEAR SPAN:	18'	CLEAR HEIGHT:	11'
YEAR BUILT:	1964	FULL WATERWAY:	198 sq. ft.
STRUCTURE TYPE:	Concrete box		

PROPOSED STRUCTURE

STRUCTURE TYPE: Rigid Frame

CLEAR SPAN(NORMAL TO STREAM): 23'
VERTICAL CLEARANCE ABOVE STREAMBED: 8'
WATERWAY OF FULL OPENING: 185 sq. ft.

WATER SURFACE ELEVATIONS AT:

Q2.33 =	313.8'	VELOCITY=	5.4 fps
Q10 =	315.4'	"	7.4 fps
Q25 =	316.1'	"	7.8 fps
Q50 =	316.8'	"	8.2 fps
Q100 =	318.0'	"	9.1 fps

IS THE ROADWAY OVERTOPPED BELOW Q100: No
FREQUENCY: N/A
RELIEF ELEVATION: 317.7'
DISCHARGE OVER ROAD @Q100: N/A

AVERAGE LOW ELEVATION OF SUPERSTRUCTURE: 318.4' (on upstream side)
VERTICAL CLEARANCE: @ Q50 = 1.6'

SCOUR: Minimum required depth for foundation design is 6' below streambed

REQUIRED CHANNEL PROTECTION: Stone Fill Type III

PERMIT INFORMATION

AVERAGE DAILY FLOW:		DEPTH OR ELEVATION:
ORDINARY LOW WATER:		
ORDINARY HIGH WATER:		

TEMPORARY BRIDGE REQUIREMENTS

STRUCTURE TYPE: None required
CLEAR SPAN (NORMAL TO STREAM):
VERTICAL CLEARANCE ABOVE STREAMBED:
WATERWAY AREA OF FULL OPENING:

ADDITIONAL INFORMATION

The hydraulics for this site were calculated without any backwater from the Winooski River.

TRAFFIC MAINTENANCE NOTES

1. MAINTAIN TRAFFIC ON AN OFF SITE DETOUR.
2. TRAFFIC SIGNALS ARE NOT NECESSARY.
3. SIDEWALKS ARE NOT NECESSARY

DESIGN VALUES

1.	DESIGN LIVE LOAD		HL-93
2.	FUTURE PAVEMENT	d_p:	3.0 INCH
3.	CULVERT OPENING	D:	23.00 FT
4.	MIN. MID-SPAN POS. CAMBER @ RELEASE (PRESTRESSED UNITS)	Δ:	- - -
5.	PRESTRESSING STRAND	f_y:	- - -
6.	PRESTRESSED CONCRETE STRENGTH	f'_c:	- - -
7.	PRESTRESSED CONCRETE RELEASE STRENGTH	f'_{ci}:	- - -
8.	CONCRETE, HIGH PERFORMANCE CLASS AA	f'_c:	- - -
9.	CONCRETE, HIGH PERFORMANCE CLASS A	f'_c:	4.0 KSI
10.	CONCRETE, HIGH PERFORMANCE CLASS B	f'_c:	3.5 KSI
11.	CONCRETE, CLASS C	f'_c:	- - -
12.	REINFORCING STEEL	f_y:	60 KSI
13.	STRUCTURAL STEEL AASHTO M270	f_y:	- - -
14.	NOMINAL BEARING RESISTANCE OF SOIL	q_n:	- - -
15.	SOIL BEARING RESISTANCE FACTOR (REFER TO AASHTO LRFD)	ϕ:	- - -
16.	NOMINAL BEARING RESISTANCE OF ROCK	q_n:	- - -
17.	ROCK BEARING RESISTANCE FACTOR (REFER TO AASHTO LRFD)	ϕ:	- - -
18.	PILE RESISTANCE FACTOR	ϕ:	- - -
19.	LATERAL PILE DEFLECTION	Δ:	- - -
20.	BASIC WIND SPEED	V_{3s}:	- - -
21.	MINIMUM GROUND SNOW LOAD	p_g:	- - -
22.	SEISMIC DATA PGA: 0	S_s:	- - -
		S_1:	- - -
23.			
24.			- - -
25.			- - -
26.			- - -

LRFR LOAD RATING FACTORS

LOADING LEVELS	TRUCK						
	H-20	HL-93	3S2	6 AXLE	3A. STR.	4A. STR.	5A. SEM
TONNAGE	20	36	36	66	30	34.5	38
INVENTORY							
POSTING							
OPERATING							
COMMENTS:	TABLE TO BE COMPLETED BY CONTRACTOR'S DESIGNER						

AS BUILT "REBAR" DETAIL

LEVEL I	LEVEL II	LEVEL III
TYPE:	TYPE:	TYPE:
GRADE:	GRADE:	GRADE:

FRAME DESIGN CRITERIA

1. PROPOSED FRAME IS A PRECAST CONCRETE STRUCTURE (25'-0" X 0'-0" X 0'-0" RIGID FRAME).
2. FRAME ENDS ARE SKEWED BY AN ANGLE OF 20°
3. FRAME WILL BE SET AT A SLOPE OF 0.25 IN. ON 1 FT.
4. FRAME WILL NOT REQUIRE FISH PASSAGE ACCOMODATIONS
5. FRAME CONSTRUCTION WILL NOT REQUIRE A TEMPORARY PIPE

TRAFFIC DATA

YEAR	ADT	DHV	% D	% T	ADTT
2016	3500	410	63	1.8	310
2036	3700	430	63	2.8	510

20 year ESAL for flexible pavement from 2016 to 2036 : 2286000
40 year ESAL for flexible pavement from 2016 to 2056 : 5501000
Design Speed : 50 mph

PROJECT NAME: **RICHMOND**
PROJECT NUMBER: **BF 0284(28)**

FILE NAME: s13c070pi.dgn
PROJECT LEADER: R. S. YOUNG
DESIGNED BY: W. LAMMER
PRELIMINARY INFORMATION SHEET

PLOT DATE: 16-JUN-2016
DRAWN BY: W. LAMMER
CHECKED BY: S. COLEY
SHEET 2 OF 50

GENERAL

1. ALL MATERIALS AND CONSTRUCTION SHALL CONFORM TO THE VERMONT AGENCY OF TRANSPORTATION 2011 STANDARD SPECIFICATIONS FOR CONSTRUCTION, THE 2012 AASHTO LFRD BRIDGE DESIGN SPECIFICATIONS, AND THEIR LATEST REVISIONS.

2. ALL PRECAST CONCRETE ELEMENTS TO BE FABRICATED TO THE SPECIFIED DIMENSIONS WITHIN THE TOLERANCES DICTATED IN THE PRECAST/ PRESTRESSED CONCRETE INSTITUTE TOLERANCE MANUAL FOR PRECAST AND PRESTRESSED CONCRETE CONSTRUCTION, MNL 135-00, AND ITS LATEST REVISIONS.

3. ALL DIMENSIONS SHOWN IN THE PLANS ARE HORIZONTAL OR VERTICAL AND ARE GIVEN AT 68 DEGREES FARENHEIT UNLESS NOTED OTHERWISE.

4. NO ADJUSTMENTS TO THE BITUMINOUS WEARING SURFACE ON THE BRIDGE SHALL BE MADE TO ACCOUNT FOR THE DIFFERENCE BETWEEN BEAM CAMBER AND THE THEORETICAL ROADWAY PROFILE. THE WEARING SURFACE SHALL BE SHIMMED TRANSVERSELY AS NECESSARY TO ACCOUNT FOR POTENTIAL DIFFERENTIAL CAMBER OF THE ADJACENT BEAMS.

5. THE REMOVAL OF EXISTING STRUCTURES WILL BE PAID FOR UNDER ITEM 529.15, 'REMOVAL OF STRUCTURE'. THIS WORK SHALL INCLUDE REMOVAL OF THE ENTIRE SUPERSTRUCTURE AND ANY PORTIONS OF THE EXISTING ABUTMENTS THAT FALL OUTSIDE THE LIMITS OF STRUCTURE EXCAVATION OR UNCLASSIFIED CHANNEL EXCAVATION.

TRAFFIC CONTROL

6. TRAFFIC MANAGEMENT WILL BE ACCOMPLISHED USING AN OFF-SITE DETOUR ON I-89 AND A FOUR WEEK CLOSURE. REFER TO THE TRAFFIC CONTROL SHEET FOR ADDITIONAL TRAFFIC CONTROL NOTES.

EARTHWORK

7. THE REMOVAL OF EXISTING STRUCTURES WILL BE PAID FOR UNDER ITEM 529.15, 'REMOVAL OF STRUCTURE'. THIS WORK SHALL INCLUDE REMOVAL OF THE ENTIRE SUPERSTRUCTURE AND ANY PORTIONS OF THE EXISTING ABUTMENTS THAT FALL OUTSIDE THE LIMITS OF STRUCTURE EXCAVATION OR UNCLASSIFIED CHANNEL EXCAVATION.

8. THE "STONE FILL, TYPE III" AND "STONE FILL TYPE II" UNDER THE BRIDGE AS SHOWN IN THE PLANS SHALL BE PLACED BEFORE THE NEW RIGID FRAMES ARE SET.

CONCRETE

9. ALL LIFTING POINTS IN THE SUPERSTRUCTURE SHALL BE REMOVABLE TO THE MINIMUM CLEAR COVER FOR REINFORCING STEEL SPECIFIED IN THE PLANS. THE LIFTING POINTS SHALL BE DETAILED IN THE APPROPRIATE FABRICATION DRAWING. PAYMENT FOR THIS WORK WILL BE CONSIDERED INCIDENTAL TO THE APPROPRIATE PRECAST ITEM.

10. ALL RECESSED LIFTING POINTS AND BLOCKOUTS SHALL BE FILLED WITH A TYPE IV MORTAR PER SUBSECTION 707.03 PAYMENT WILL BE CONSIDERED INCIDENTAL TO THE APPROPRIATE PRECAST ITEM.

11. THE METHOD OF FORMING FOR SUBSEQUENT POURS AFTER PLACING PRECAST/PRESTRESSED SUPERSTRUCTURE UNITS SHALL BE DETERMINED BY THE CONTRACTOR. THE CONTRACTOR IS ENCOURAGED TO WORK WITH THE FABRICATOR IF ADDITIONAL SUPPORTS ARE REQUIRED. IN NO CASE SHALL THE CONTRACTOR ATTACH ADDITIONAL FORM OR SCREED SUPPORTS BY DRILLING OR SIMILAR MEANS INTO ANY PRECAST/PRESTRESSED SUPERSTRUCTURE UNIT.

12. WATER REPELLENT, SILANE SHALL BE APPLIED TO ALL EXPOSED CONCRETE SURFACES, EXCEPT THE UNDERSIDE OF THE FRAME ROOF BETWEEN DRIP NOTCHES.

13. ALL EXPOSED EDGES SHALL HAVE A 1"X1" CHAMFER UNLESS OTHERWISE NOTED.

14. HIGH PERFORMANCE CONCRETE, RAPID SET SHALL BE WET-CURED UNTIL IT HAS OBTAINED THE FOLLOWING COMPRESSIVE STRENGTH AS VERIFIED BY TESTING OF FIELD CYLINDERS:
    - FRAME SECTION AND APPROACH SLAB CLOSURE POURS: 4,000 PSI
    - PILE CAVITIES: 24 HOURS OR DESIGN STRENGTH, WHICHEVER OCCURS SOONER
    - PILE CAP CLOSURE POURS: 4,000 PSI

REINFORCING STEEL

15. ALL REINFORCING STEEL SHALL BE DETAILED AND FABRICATED USING PROCEDURES AND TOLERANCES IN ACCORDANCE WITH APPLICABLE PUBLICATIONS OF THE "CONCRETE REINFORCING STEEL INSTITUTE".

16. TEST BARS SHALL BE PROVIDED IN ACCORDANCE WITH THE "VERMONT AGENCY OF TRANSPORTATION MATERIAL SAMPLING MANUAL" AVAILABLE ON THE AGENCY WEBSITE. A MINIMUM OF TWO TEST SECTIONS ARE REQUIRED FOR EACH SIZE, BRAND, AND GRADE OR TYPE OF REINFORCING. SEE THE MANUAL FOR ACCEPTABLE DIMENSIONS OF TEST SECTIONS. ALL COSTS ASSOCIATED WITH PROVIDING BARS FOR TESTING WILL BE INCLUDED IN THE UNIT PRICE BID FOR THE APPROPRIATE PRECAST ITEM.

17. ALL REINFORCING STEEL IN THE RIGID FRAME AND THE APPROACH SLABS SHALL MEET THE REQUIREMENTS OF SECTION 507 FOR "RIENFORCING STEEL LEVEL II" AND WILL BE INCLUDED IN THE UNIT PRICE BID FOR THE APPROPRIATE PRECAST ITEM.

18. ALL PILE CAP REINFORCING STEEL SHALL MEET THE REQUIREMENTS OF SECTION 507 FOR "REINFORCING STEEL, LEVEL I" AND WILL BE INCLUDED IN THE UNIT PRICE BID FOR THE APPROPRIATE PILE CAP OPTION.

19. CUTTING AND REPAIRING DAMAGED AREAS OF COATED REINFORCING STEEL SHALL BE PERFORMED IN ACCORDANCE WITH SUBSECTION 507.04.

20. REINFORCING STEEL PLACEMENT TOLERANCES SHALL BE:
    SPACING: +/- 1 INCH
    CLEARANCE: +/- 1/4 INCH

PRECAST PILE CAPS

21. IF A VERTICAL CONSTRUCTION JOINT IS REQUIRED BY THE CONTRACTOR FOR SHIPMENT OF THE PILE CAPS, THE SECTIONS SHALL BE JOINED WITH CLOSURE POUR DETAILED ON THE PILE CAP REINFORCING PLAN SHEET.

22. ITEM 524.21, JOINT SEALER, POLYURETHANE, SHALL BE APPLIED TO THE FAR FACE OF ALL VERTICAL CONSTRUCTION JOINTS.

PRECAST RIGID FRAME

23. THE PILE CAPS ARE DESIGNED FOR THE REACTIONS AND BEHAVIOR SUMMARIZED BELOW. IF THE PROPOSED FRAME REACTIONS AND GEOMETRY VARY BEYOND THE LIMITS DEFINED BELOW, THE FABRICATOR SHALL ASSUME DESIGN RESPONSIBILITY OF THE FOUNDATION, DESIGN THE NECESSARY REVISIONS TO THE FOUNDATION, AND SUBMIT STRUCTURAL CALCULATIONS FOR THE REVISED DESIGN IN ACCORDANCE WITH SECTION 540.04.

    a. FRAME STIFFNESS: WHEN MODELING THE STIFFNESS OF THE FRAME FOR PURPOSES OF DESIGNING THE PILES AND PILE CAPS, THE FRAME LEG WAS ASSUMED TO HAVE A MINIMUM THICKNESS OF 12 INCHES. IF THE FABRICATOR'S PROPOSED LEG THICKNESS IS LESS THAN 12 INCHES, THE FABRICATOR SHALL ASSUME DESIGN RESPONSIBILITY OF THE PILES AND PILE CAP.

    b. FRAME REACTIONS AT TOP OF PEDESTAL: THE FOUNDATION WAS DESIGNED FOR A MAXIMUM UN-FACTORED REACTIONS OF:
    – DEAD LOAD: 6.4 KIPS PER FOOT OF FRAME
    – LIVE LOAD: 5.5 KIPS PER FOOT OF FRAME

    c. TOP OF PILE CAP: THE PILE CAP IS DESIGNED FOR THE DIMENSIONS SHOWN IN THE PLANS. IF THE PROPOSED FABRICATOR'S DESIGN REQUIRES A HIGHER PEDESTAL ELEVATION, THE FABRICATOR SHALL ASSUME DESIGN RESPONSIBILITY OF THE PILE CAP.

24. THE PRECAST FRAME AND WINGWALLS SHALL BE DSIGNED BY THE PRECAST FABRICATOR, INLCUDING THE ANCHORAGE AND CONNETIONS BETWEEEN ELEMENTS. ALL ELEMENTS SHALL BE INSTALLED IN ACCORDANCE WITH THE FABRICATOR'S RECOMMENDATIONS. THE CONTRACTOR SHALL SUBMIT FABRICATION DRAWINGS AND CALCULATIONS TO THE ENGINEER IN ACCORDANCE WITH SECTION 105.

25. DESIGN CRITERIA:
    - LIVE LOAD = HL-93
    - UNIT WEIGHT OF BACKFILL = 140 LBS/CF
    - ACTIVE EARTH PRESSURE COEFFICIENT FOR BACKFILL Ka = 0.28
    - AT REST EARTH PRESSURE COEFFICIENT FOR BACKFILL Ko = 0.44
    - PASSIVE EARTH PRESSURE COEFFICIENT FOR BACKFILL Kp = 3.53

26. THE FABRICATOR SHALL SUPPLY THE STATE WITH THE LRFR LOAD RATING FACTORS FOR THE FRAME TO COMPLETE THE LOAD RATING TABLE ON THE PRELIMINARY INFORMATION SHEET.

27. CLEAR COVER ON THE REINFORCING STEEL SHALL BE ACCORDING TO THE FOLLOWING TABLE UNLESS NOTED OTHERWISE:

LOCATION	CLEAR COVER (INCHES)
UNDERSIDE OF FRAME ROOF	1.5
EXPOSED TO EARTH OR WEATHER	2.0
TOP OF FRAME AND APPROACH SLABS	2.5
DIRECT EXPOSURE TO DEICING SALTS (FRAME FASCIA AND CURB)	3.0
CAST AGAINST EARTH	3.0

28. THE LUMP SUM COST FOR ITEM 540.10 "PRECAST CONCRETE STRUCTURE (SUPERSTRUCTURE FRAME AND WINGWALLS)" SHALL INCLUDE THE PRECAST RIGID FRAME, WINGWALLS, AND MECHANICAL CONNECTIONS.

29. THE PRECAST STRUCTURE DETAILS ARE SHOWN FOR REFERENCE ONLY. THE ACTUAL DIMENSIONS AND CONFIGURATION WILL BE DEPENDENT ON THE FABRICATOR. THE INSIDE CLEAR DIMENSION OF THE FRAME SHALL BE A MINIMUM OF 23 FEET AND THE THICKNESS OF THE ROOF SLAB SHALL BE NO MORE THAN 18 INCHES.

30. THE USE OF EQUIPMENT AND THE METHOD OF BACKFILLING AROUND THE BURIED STRUCTURE SHALL BE IN ACCORDANCE WITH THE FABRICATOR'S RECOMMENDATIONS. CARE SHALL BE TAKEN WHEN BACKFILLING AGAINST JOINT SEALING MATERIALS.

31. NO HOLES SHALL BE DRILLED IN THE RIGID FRAME OR ARCH WITHOUT THE APPROVAL OF THE FABRICATOR AND THE AGENCY.

32. JOINTS BETWEEN ALL ABUTING PRECAST UNITS SHALL BE WATERTIGHT AND MECHANICALLY CONNECTED.

APPROACH SLAB AND SUPERSTRUCTURE LONGITUDINAL CLOSURE POURS

33. THE CONCRETE EDGES ALONG THE LONGITUDINAL CLOSURE POURS SHALL BE TREATED TO PROVIDE A ROUGHENED/ EXPOSED AGGERGATE SURFACE. THAT AMPLITUDE OF THE EXPOSED AGGREGATE SHALL BE A MINIMUM OF 1/8" AND BE COMPLETED PRIOR TO ERECTION OF THE BEAMS. THE FABRICATOR SHALL INDICATE THE METHOD USED TO ACHIEVE THIS PROFILE ON THE FABRICATION DRAWING AND METHOD USED TO PROTECT THE REINFORCING STEEL.

34. THE CONCRETE FOR LONGITUDINAL CLOSURE POURS SHALL BE ITEM 900.608 "SPECIAL PROVISION (HIGH PERFORMANCE CONCRETE, RAPID SET) (FPQ)" AND WILL BE PAID UNDER ITEM 900.608 "SPECIAL PROVISION (HIGH PERFORMANCE CONCRETE, RAPID SET) (FPQ)" FOR THE APPROPRIATE SUPERSTRUCTURE ALTERNATE. SEE SPECIAL PROVISIONS FOR REQUIREMENTS.

35. THE LONGITUDINAL CLOSURE POUR CONCRETE SHALL OBTAIN A STRENGTH OF 4,000 PSI PRIOR TO ANY VEHICULAR LOADING.

APPROACH SLABS

36. APPROCH SLAB CONCRETE STRENGTH: f'c = 5,000 PSI.

37. CORRUGATED POST-TENSIONING DUCTS IN THE PRECAST APPROACH SLABS FOR DOWEL CONNECTIONS SHALL BE CONSTRUCTED FROM EITHER POLYETHYLENE OR POLYPROPYLENE. THE DUCT SHALL HAVE A MINIMUM MATERIAL THICKNESS OF 0.080 IN. +/- 0.010 IN. AND SHALL HAVE A WHITE COATING ON THE OUTSIDE OR SHALL BE OF WHITE MATERIAL WITH UNTRAVIOLET STABILIZERS ADDED. POLYETHYLENE DUCT SHALL BE FABRICATED FROM RESINS MEETING OR EXCEEDING THE REQUIREMENTS OF ASTM D 3350 WITH A CELL CLASSIFICATION OF 345464A. POLYPROPYLENE DUCT SHALL BE FABRICATED FROM RESINS MEETING OR EXCEEDING THE REQUIREMENTS OF ASTM D 4101 WITH A CELL CLASSIFICATION RANGE OF PP0340B44544 TO PP340B65884. ALL COSTS ASSOCIATED WITH PLACING THE DUCT WILL BE INCLUDED IN THE BID PRICE FOR THE APPROPRIATE PRECAST APPROACH SLAB OPTION.

38. GROUT USED TO FILL DOWEL DUCTS IN THE PRECAST APPROACH SLABS FOR DOWEL CONNECTIONS SHALL BE MORTAR, TYPE IV IN ACCORDANCE WITH SECTION 540 – PRECAST CONCRETE. ALL COSTS ASSOCIATED WITH PROVIDING AND PLACING GROUT FOR THE APPROACH SLAB DOWEL CONNECTIONS WILL BE INCLUDED IN THE BID PRICE FOR THE APPROPRIATE PRECAST APPROACH SLAB OPTION.

H-PILES

39. FOR ESTIMATING PURPOSES, THE PILE TIP ELEVATIONS WERE ASSUMED AS SHOWN ON THE BORING LOGS. THE ACTUAL IN PLACE LENGTHS MAY VARY. *[Currently showing 100' at each location. Additional boring to be completed July 2016 to evaluate the presence of bedrock. This may reduce estimated pile lengths.]*

40. THE PILES SHALL BE HP 12 X 63 ORIENTED FOR STRONG AXIS BENDING AT BOTH ABUTMENTS.

41. TO PREVENT DAMAGE TO THE PILES, PILE SHOES ARE REQUIRED FOR DRIVEN PILES AND SHALL CONFORM TO SUBSECTION 505.04 (f).

42. THE PILES AT BOTH ABUTMENTS SHALL BE DRIVEN TO A NOMINAL AXIAL PILE DRIVING RESISTANCE (RNDR) OF 219 KIPS, PROVIDED A MINIMUM PENETRATION OF 25 FEET BELOW THE BOTTOM OF PILE CAP HAS BEEN ACHIEVED.

43. A MINIMUM OF ONE DYNAMIC PILE TEST SHALL BE CONDUCTED ON PILES AT EACH ABUTMENT.

44. THE TOPS OF THE PILES AFTER DRIVING OR PLACEMENT SHALL NOT VARY FROM THE POSITION SHOWN ON THE PLANS BY MORE THAN 3 INCHES. THE PILE ORIENTATION SHALL NOT VARY BY MORE THAN 5 DEGREES. THE CONTRACTOR SHALL DEMONSTRATE HOW THE TOLERANCES WILL BE MET TO THE SATISFACTION OF THE ENGINEER. THESE MEASURES SHALL BE DEMONSTRATED IN A SUBMITTAL TO BE ACCEPTED BEFORE PILE DRIVING COMMENCES.

MISCELLANEOUS

45. EPSC EXISTING CONDITIONS SHEET AND EPSC PLAN SHEET HAVE BEEN INCLUDED AS A REFERENCE FOR SUBMITTALS.

46. ITEM 404.65 "EMULSIFIED ASPHALT" IS TO BE APPLIED AT A RATE OF 0.080 GAL/SY BETWEEN SUCCESSIVE COURSES OF PAVEMENT AND ON ALL COLD PLANED SURFACES OR AS DIRECTED BY THE ENGINEER.

47. ITEM 520.10, "MEMBRANE WATERPROOFING, SPRAY APPLIED" SHALL BE APPLIED TO THE BRIDGE DECK AS PER THE MANUFACTURER'S INSTRUCTIONS AND EXTEND ONTO THE APPROACH SLABS 2 FEET BEYOND THE BEGIN BRIDGE/END OF BRIDGE.

STATE OF VERMONT
AGENCY OF TRANSPORTATION

QUANTITY SHEET

SUMMARY OF ESTIMATED QUANTITIES / TOTALS / DESCRIPTIONS

SUMMARY OF ESTIMATED QUANTITIES		TOTALS: GRAND TOTAL	TOTALS: FINAL	UNIT	ITEMS	ITEM NUMBER	ROUND
1		1		LS	CLEARING AND GRUBBING, INCLUDING INDIVIDUAL TREES AND STUMPS	201.10	
1380		1380		CY	COMMON EXCAVATION	203.15	
	550	550		CY	UNCLASSIFIED CHANNEL EXCAVATION	203.27	
30		30		CY	TRENCH EXCAVATION OF EARTH	204.20	
1		1		CY	TRENCH EXCAVATION OF EARTH, EXPLORATORY (N.A.B.I.)	204.22	
	240	240		CY	STRUCTURE EXCAVATION	204.25	
	170	170		CY	GRANULAR BACKFILL FOR STRUCTURES	204.30	
310		310		SY	COLD PLANING, BITUMINOUS PAVEMENT	210.10	
1720		1720		CY	SUBBASE OF DENSE GRADED CRUSHED STONE	301.35	
70		70		TON	AGGREGATE SHOULDERS	402.12	
18		18		CWT	EMULSIFIED ASPHALT	404.65	
713		713		TON	SUPERPAVE BITUMINOUS CONCRETE PAVEMENT	490.30	
	1	1		LS	FURNISHING EQUIPMENT FOR DRIVING PILING	504.10	
	1020	1020		LF	STEEL PILING, HP 12 X 63 (ABUTMENT # 1)	505.155	
	2	2		EACH	DYNAMIC PILE LOADING TEST	505.45	
	8	8		GAL	WATER REPELLENT, SILANE	514.10	
	120	120		SY	MEMBRANE WATERPROOFING, SPRAY APPLIED	520.10	
	1	1		EACH	REMOVAL OF STRUCTURE (680 SF - EST.)	529.15	
	1	1		LS	PRECAST CONCRETE STRUCTURE (APPROACH SLAB #1)	540.10	
	1	1		LS	PRECAST CONCRETE STRUCTURE (APPROACH SLAB #2)	540.10	
	1	1		LS	PRECAST CONCRETE STRUCTURE (PILE CAP ABUT #1)	540.10	
	1	1		LS	PRECAST CONCRETE STRUCTURE (PILE CAP ABUT #2)	540.10	
	1	1		LS	PRECAST CONCRETE STRUCTURE RIGID FRAME OR ARCH TYPE	540.10	
					BEGIN OPTION AA		
70		70		LF	18" CSP .064 (2-2/3 X 1/2)	601.0015	
70		70		LF	18" CAAP .060 (2-2/3 X 1/2)	601.0215	
70		70		LF	18" PCCSP .079 (2-2/3 X 1/2)	601.0416	
70		70		LF	18" RCP CLASS III	601.0815	
70		70		LF	18" CPEP	601.0915	
70		70		LF	18" CPPP (SL)	601.2815	
					END OPTION AA		
	100	100		CY	STONE FILL, TYPE II (STREAM BED MATERIAL, TYPE 1)	613.11	
	260	260		CY	STONE FILL, TYPE III	613.12	
					BEGIN OPTION BB		
160		160		LF	PRECAST REINFORCED CONCRETE CURB, TYPE B	616.26	
160		160		LF	CAST-IN-PLACE CONCRETE CURB, TYPE B	616.28	
					END OPTION BB		
75		75		LF	STEEL BEAM GUARDRAIL, GALVANIZED	621.20	
4		4		EACH	GUARDRAIL APPROACH SECTION, GALVANIZED 2 RAIL BOX BEAM (GUARDRAIL APPROACH SECTION)	621.72	
270		270		LF	REMOVAL AND DISPOSAL OF GUARDRAIL	621.80	

DETAILED SUMMARY OF QUANTITIES

QUANTITIES	UNIT	ITEMS
		EARTHWORK SUMMARY
		FILL AVAILABLE
1380	CY	COMMON EXCAVATION (1380 X 1.0)
165	CY	CHANNEL EXCAVATION (550 X 0.3)
72	CY	STRUCTURE EXCAVATION, EARTH (240 X 0.3)
28	CY	TRENCH EXCAVATION (31X 0.9)
5	CY	ROUNDING
1650	CY	TOTAL FILL AVAILABLE
		FILL REQUIRED
110	CY	FILL (CY EARTH)
127	CY	FACTORED FILL (X 1.15)
3	CY	ROUNDING
1520	CY	TOTAL WASTE
		SUPERPAVE BITUMINOUS CONCRETE PAVEMENT
384	TONS	TYPE IIS
329	TONS	TYPE IVS
713	TONS	TOTAL

PROJECT NAME: RICHMOND	
PROJECT NUMBER: BF 0284(28)	
FILE NAME: s13c070qs	PLOT DATE: 16-JUN-2016
PROJECT LEADER: R. YOUNG	DRAWN BY: S. COLEY
DESIGNED BY: S. COLEY	CHECKED BY: ------
QUANTITY SHEET 1	SHEET 4 OF 51

STATE OF VERMONT
AGENCY OF TRANSPORTATION

QUANTITY SHEET

SUMMARY OF ESTIMATED QUANTITIES										TOTALS		DESCRIPTIONS			
										GRAND TOTAL	FINAL	UNIT	ITEMS	ITEM NUMBER	ROUND
									1	1		LS	FIELD OFFICE, ENGINEERS	631.10	
									1	1		LS	TESTING EQUIPMENT, CONCRETE	631.16	
									1	1		LS	TESTING EQUIPMENT, BITUMINOUS	631.17	
									3000	3000		DL	FIELD OFFICE TELEPHONE (N.A.B.I.)	631.26	
						1				1		LS	MOBILIZATION/DEMOBILIZATION	635.11	
						1150				1150		LF	DURABLE 4 INCH WHITE LINE, POLYUREA	646.404	
						1070				1070		LF	DURABLE 4 INCH YELLOW LINE, POLYUREA	646.414	
						17				17		LF	DURABLE 24 INCH STOP BAR, POLYUREA	646.484	
						4				4		EACH	DURABLE LETTER OR SYMBOL, POLYUREA	646.494	
						1870				1870		SY	GEOTEXTILE FOR ROADBED SEPARATOR	649.11	
								520		520		SY	GEOTEXTILE UNDER STONE FILL	649.31	
							480			480		SY	GEOTEXTILE FOR SILT FENCE	649.51	
							150			150		SY	GEOTEXTILE FOR FILTER CURTAIN	649.61	
							20			20		LB	SEED	651.15	
							100			100		LB	FERTILIZER	651.18	
							1			1		TON	AGRICULTURAL LIMESTONE	651.20	
							1			1		TON	HAY MULCH	651.25	
							100			100		CY	TOPSOIL	651.35	
								200		200		SY	GRUBBING MATERIAL	651.40	
							1			1		LS	EPSC PLAN	652.10	
							10			10		HR	MONITORING EPSC PLAN	652.20	
							1			1		LU	MAINTENANCE OF EPSC PLAN (N.A.B.I.)	652.30	
							880			880		SY	TEMPORARY EROSION MATTING	653.20	
							30			30		CY	VEHICLE TRACKING PAD	653.35	
							1080			1080		LF	BARRIER FENCE	653.50	
						6.92				6.92		SF	TRAFFIC SIGNS, TYPE A	675.20	
						76				76		LF	SQUARE TUBE SIGN POST AND ANCHOR	675.341	
						5				5		EACH	REMOVING SIGNS	675.50	
						4				4		EACH	DELINEATOR WITH STEEL POST	676.10	
								17		17		CY	SPECIAL PROVISION (HIGH PERFORMANCE CONCRETE, RAPID SET)	900.608	
						35000				35000		DL	SPECIAL PROVISION (INCENTIVE/DISINCENTIVE)(N.A.B.I.)	900.615	
						1				1		EACH	SPECIAL PROVISION (CPM SCHEDULE)	900.620	
						4				4		EACH	SPECIAL PROVISION (TYPE IIA END ASSEMBLY)	900.620	
						1				1		LS	SPECIAL PROVISION (TRAFFIC CONTROL ALL INCLUSIVE)	900.645	

DETAILED SUMMARY OF QUANTITIES		
QUANTITIES	UNIT	ITEMS

PROJECT NAME: RICHMOND
PROJECT NUMBER: BF 0284(28)

FILE NAME: s13c070qs
PROJECT LEADER: R. YOUNG
DESIGNED BY: S. COLEY
QUANTITY SHEET 2

PLOT DATE: 16-JUN-2016
DRAWN BY: S. COLEY
CHECKED BY: ------

GENERAL INFORMATION

SYMBOLOGY LEGEND NOTE

THE SYMBOLOGY ON THIS SHEET IS INTENDED TO COVER STANDARD CONVENTIONAL SYMBOLOGY. THE SYMBOLOGY IS USED FOR EXISTING & PROPOSED FEATURES WITH HEAVIER LINEWEIGHT, IN COMBINATION WITH PROJECT ANNOTATION, AS NOTED ON PROJECT PLAN SHEETS. THIS LEGEND SHEET COVERS THE BASICS. SYMBOLOGY ON PLANS MAY VARY, PLAN ANNOTATIONS AND NOTES SHOULD BE USED TO CLARIFY AS NEEDED.

R.O.W. ABBREVIATIONS (CODES) & SYMBOLS

POINT	CODE	DESCRIPTION
	CH	CHANNEL EASEMENT
	CONST	CONSTRUCTION EASEMENT
	CUL	CULVERT EASEMENT
	D&C	DISCONNECT & CONNECT
	DIT	DITCH EASEMENT
	DR	DRAINAGE EASEMENT
	DRIVE	DRIVEWAY EASEMENT
	EC	EROSION CONTROL
	HWY	HIGHWAY EASEMENT
	I&M	INSTALL & MAINTAIN EASEMENT
	LAND	LANDSCAPE EASEMENT
	R&RES	REMOVE & RESET
	R&REP	REMOVE & REPLACE
	SR	SLOPE RIGHT
	UE	UTILITY EASEMENT
	(P)	PERMANENT EASEMENT
	(T)	TEMPORARY EASEMENT
■	BNDNS	BOUND SET
⊡	BNDNS	BOUND TO BE SET
●	IPNS	IRON PIN SET
◎	IPNS	IRON PIN TO BE SET
⊠	CALC	EXISTING ROW POINT
○	PROW	PROPOSED ROW POINT
[LENGTH]		LENGTH CARRIED ON NEXT SHEET

COMMON TOPOGRAPHIC POINT SYMBOLS

POINT	CODE	DESCRIPTION
	APL	BOUND APPARENT LOCATION
	BM	BENCHMARK
	BND	BOUND
	CB	CATCH BASIN
	COMB	COMBINATION POLE
	DITHR	DROP INLET THROATED DNC
	EL	ELECTRIC POWER POLE
	FPOLE	FLAGPOLE
	GASFIL	GAS FILLER
	GP	GUIDE POST
	GSO	GAS SHUT OFF
	GUY	GUY POLE
	GUYW	GUY WIRE
	GV	GATE VALUE
	H	TREE HARDWOOD
	HCTRL	CONTROL HORIZONTAL
	HVCTRL	CONTROL HORIZ. & VERTICAL
	HYD	HYDRANT
	IP	IRON PIN
	IPIPE	IRON PIPE
	LI	LIGHT - STREET OR YARD
	MB	MAILBOX
	MH	MANHOLE (MH)
	MM	MILE MARKER
	PM	PARKING METER
	PMK	PROJECT MARKER
	POST	POST STONE/WOOD
	RRSIG	RAILROAD SIGNAL
	RRSL	RAILROAD SWITCH LEVER
	S	TREE SOFTWOOD
	SAT	SATELLITE DISH
	SHRUB	SHRUB
	SIGN	SIGN
	STUMP	STUMP
	TEL	TELEPHONE POLE
	TIE	TIE
	TSIGN	SIGN W/DOUBLE POST
	VCTRL	CONTROL VERTICAL
	WELL	WELL
	WSO	WATER SHUT OFF

THESE ARE COMMON VAOT SURVEY POINT SYMBOLS FOR EXISTING FEATURES, ALSO USED FOR PROPOSED FEATURES WITH HEAVIER LINEWEIGHT, IN COMBINATION WITH PROPOSED ANNOTATION.

PROPOSED GEOMETRY CODES

CODE	DESCRIPTION
PC	POINT OF CURVATURE
PI	POINT OF INTERSECTION
CC	CENTER OF CURVE
PT	POINT OF TANGENCY
PCC	POINT OF COMPOUND CURVE
PRC	POINT OF REVERSE CURVE
POB	POINT OF BEGINNING
POE	POINT OF ENDING
STA	STATION PREFIX
AH	AHEAD STATION SUFFIX
BK	BACK STATION SUFFIX
D	CURVE DEGREE OF (100FT)
R	CURVE RADUIS OF
T	CURVE TANGENT LENGTH
L	CURVE LENGTH OF
E	CURVE EXTERNAL DISTANCE

UTILITY SYMBOLOGY

UNDERGROUND UTILITIES

UGU	UTILITY (GENERIC-UNKNOWN)
UT	TELEPHONE
UE	ELECTRIC
UC	CABLE (TV)
UEC	ELECTRIC+CABLE
UET	ELECTRIC+TELEPHONE
UCT	CABLE+TELEPHONE
UECT	ELECTRIC+CABLE+TELEP.
G	GAS LINE
W	WATER LINE
S	SANITARY SEWER (SEPTIC)

ABOVE GROUND UTILITIES (AERIAL)

AGU	UTILITY (GENERIC-UNKNOWN)
T	TELEPHONE
E	ELECTRIC
C	CABLE (TV)
EC	ELECTRIC+CABLE
ET	ELECTRIC+TELEPHONE
AER E&T	ELECTRIC+TELEPHONE
CT	CABLE+TELEPHONE
ECT	ELECTRIC+CABLE+TELEP.
	UTILITY POLE GUY WIRE

PROJECT CONSTRUCTION SYMBOLOGY

PROJECT DESIGN & LAYOUT SYMBOLOGY

CZ	CLEAR ZONE
	PLAN LAYOUT MATCHLINE

PROJECT CONSTRUCTION FEATURES

	TOP OF CUT SLOPE
	TOE OF FILL SLOPE
	STONE FILL
	BOTTOM OF DITCH ℄
	CULVERT PROPOSED
	STRUCTURE SUBSURFACE
PDF	PROJECT DEMARCATION FENCE
BF	BARRIER FENCE
	TREE PROTECTION ZONE (TPZ)
	STRIPING LINE REMOVAL
	SHEET PILES

CONVENTIONAL BOUNDARY SYMBOLOGY

BOUNDARY LINES

TOWN LINE	TOWN BOUNDARY LINE
COUNTY LINE	COUNTY BOUNDARY LINE
STATE LINE	STATE BOUNDARY LINE
	PROPOSED STATE R.O.W. (LIMITED ACCESS)
	PROPOSED STATE R.O.W.
	STATE ROW (LIMITED ACCESS)
	STATE ROW
	TOWN ROW
	PERMANENT EASEMENT LINE (P)
	TEMPORARY EASEMENT LINE (T)
	SURVEY LINE
P / L	PROPERTY LINE (P/L)
SR	SLOPE RIGHTS
6f	6F PROPERTY BOUNDARY
4f	4F PROPERTY BOUNDARY
HAZ	HAZARDOUS WASTE

EPSC LAYOUT PLAN SYMBOLOGY

EPSC MEASURES

	FILTER CURTAIN
	SILT FENCE
	SILT FENCE WOVEN WIRE
	CHECK DAM
	DISTURBED AREAS REQUIRING RE-VEGETATION
	EROSION MATTING

SEE EPSC DETAIL SHEETS FOR ADDITIONAL SYMBOLOGY

ENVIRONMENTAL RESOURCES

	WETLAND BOUNDARY
	RIPARIAN BUFFER ZONE
	WETLAND BUFFER ZONE
	SOIL TYPE BOUNDARY
T&E	THREATENED & ENDANGERED SPECIES
HAZ	HAZARDOUS WASTE AREA
AG	AGRICULTURAL LAND
HABITAT	FISH & WILDLIFE HABITAT
FLOOD PLAIN	FLOOD PLAIN
OHW	ORDINARY HIGH WATER (OHW)
	STORM WATER
	USDA FOREST SERVICE LANDS
	WILDLIFE HABITAT SUIT/CONN

ARCHEOLOGICAL & HISTORIC

ARCH	ARCHEOLOGICAL BOUNDARY
HISTORIC DIST	HISTORIC DISTRICT BOUNDARY
HISTORIC	HISTORIC AREA
H	HISTORIC STRUCTURE

CONVENTIONAL TOPOGRAPHIC SYMBOLOGY

EXISTING FEATURES

	ROAD EDGE PAVEMENT
	ROAD EDGE GRAVEL
	DRIVEWAY EDGE
	DITCH
	FOUNDATION
	FENCE (EXISTING)
	FENCE WOOD POST
	FENCE STEEL POST
	GARDEN
	ROAD GUARDRAIL
	RAILROAD TRACKS
	CULVERT (EXISTING)
	STONE WALL
	WALL
	WOOD LINE
	BRUSH LINE
	HEDGE
	BODY OF WATER EDGE
	LEDGE EXPOSED

PROJECT NAME: RICHMOND
PROJECT NUMBER: BF 0284(28)

FILE NAME: s13c070legend.dgn
PROJECT LEADER: R. YOUNG
DESIGNED BY:
SYMBOLOGY LEGEND

PLOT DATE: 16-JUN-2016
DRAWN BY: M. LONGSTREET
CHECKED BY: W. LAMMER
SHEET 6 OF 51

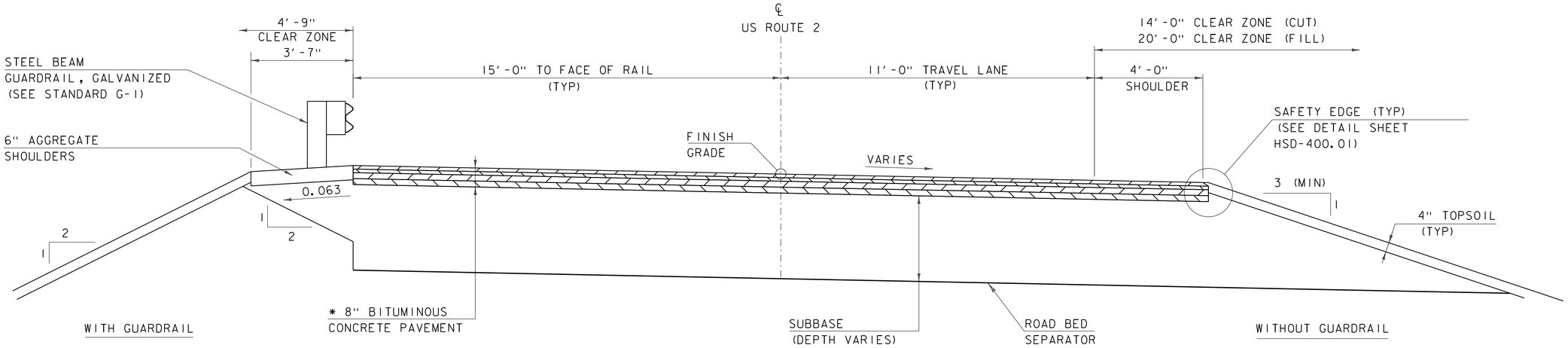

* 1½" SUPERPAVE BITUMINOUS CONCRETE PAVEMENT TYPE IVS OVER
1½" SUPERPAVE BITUMINOUS CONCRETE PAVEMENT TYPE IVS OVER
2½" SUPERPAVE BITUMINOUS CONCRETE PAVEMENT TYPE IIS OVER
2½" SUPERPAVE BITUMINOUS CONCRETE PAVEMENT TYPE IIS

ROADWAY TYPICAL SECTION

SCALE ½" = 1'-0"

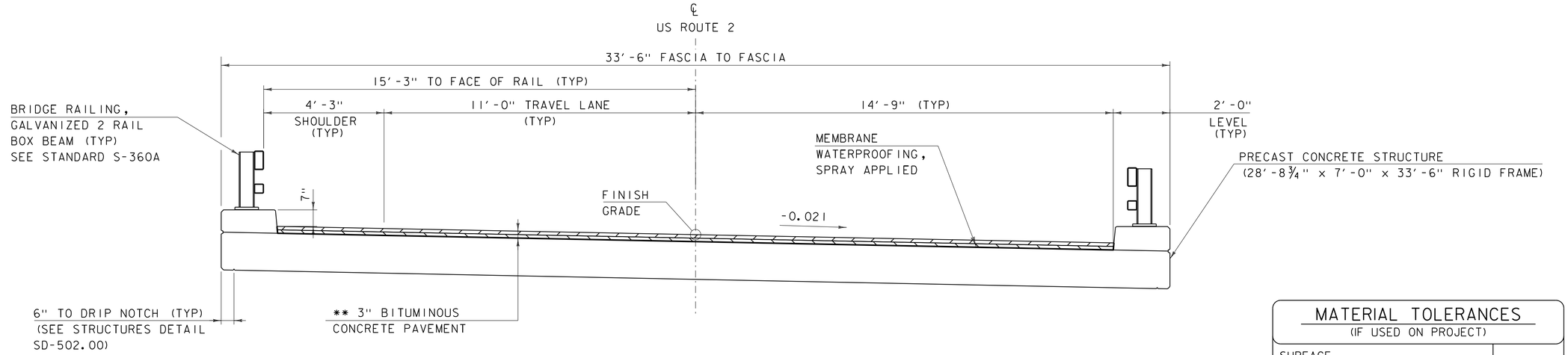

** 1½" SUPERPAVE BITUMINOUS CONCRETE PAVEMENT TYPE IVS OVER
1½" SUPERPAVE BITUMINOUS CONCRETE PAVEMENT TYPE IVS OVER

FRAME TYPICAL SECTION

SCALE ½" = 1'-0"

MATERIAL TOLERANCES
(IF USED ON PROJECT)

SURFACE	
- PAVEMENT (TOTAL THICKNESS)	+/- ¼"
- AGGREGATE SURFACE COURSE	+/- ½"
SUBBASE	+/- 1"
SAND BORROW	+/- 1"

PROJECT NAME: RICHMOND
PROJECT NUMBER: BF 0284(28)

FILE NAME: sl3c070typ.dgn
PROJECT LEADER: R. YOUNG
DESIGNED BY: W. LAMMER
TYPICAL SECTIONS 1

PLOT DATE: 16-JUN-2016
DRAWN BY: S. COLEY
CHECKED BY: W. LAMMER
SHEET 7 OF 51

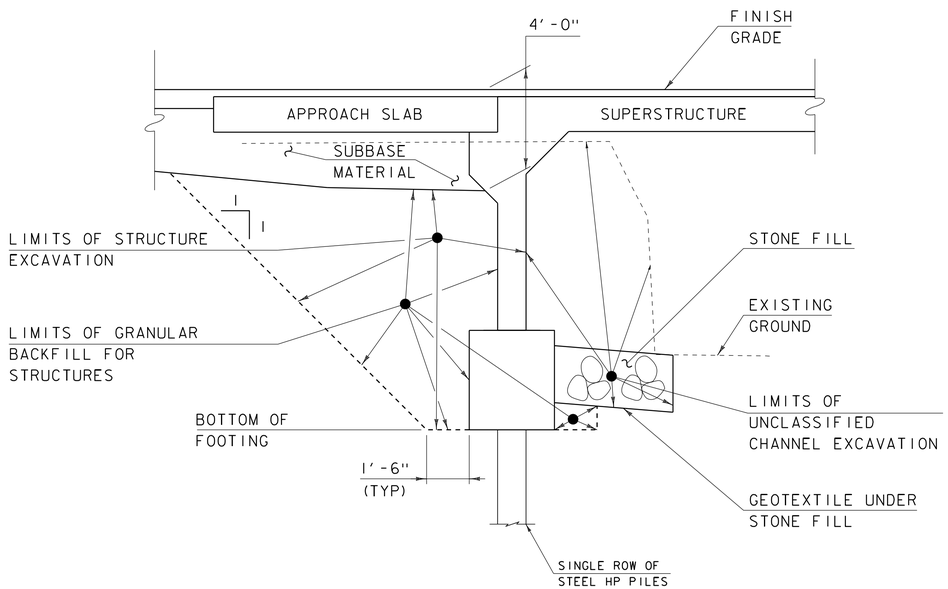

TYPICAL ABUTMENT SECTION

NOT TO SCALE

ACTUAL LIMITS OF STRUCTURE EXCAVATION SHALL BE DETERMINED BY CONTRACTOR. HOWEVER, ONLY EXCAVATION BETWEEN THE LIMITS SHOWN WILL BE PAID FOR UNDER ITEM 204.25 "STRUCTURE EXCAVATION". EXCAVATION BY THE CONTRACTOR OUTSIDE OF THESE LIMITS WILL BE AT THE EXPENSE OF THE CONTRACTOR.

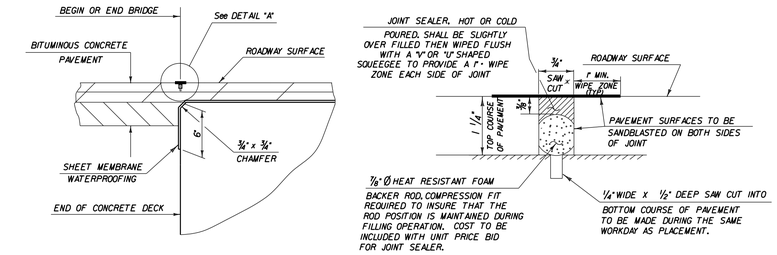

DETAIL FOR JOINT IN PAVEMENT AND SHEET MEMBRANE AT END OF BRIDGE

NOT TO SCALE

DETAIL "A"

* JOINT IS TO BE LOCATED ACCURATELY BY STRING LINING, OR OTHER MEANS, PRIOR TO PAVING, SO THAT THE SAW CUTS WILL BE MADE DIRECTLY OVER THE END OF CONCRETE DECK. JOINT SHALL BE CUT DRY IN A SINGLE PASS AND BE SEALED WITHIN 24 HOURS OR PRIOR TO EXPOSURE TO TRAFFIC. JOINT SHALL BE CLEANED PRIOR TO APPLYING THE JOINT SEALER. SEE VT. SPECIFICATION 524 AND SPECIAL PROVISIONS.

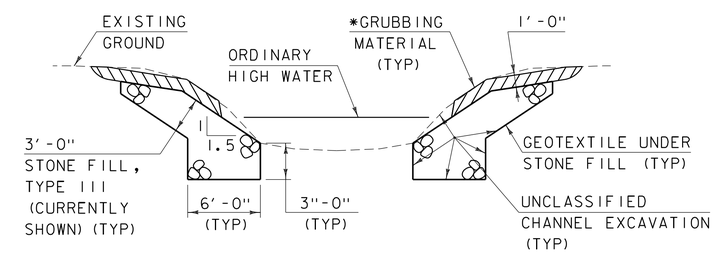

TYPICAL CHANNEL SECTION

(NOT TO SCALE)

* GRUBBING MATERIAL SHALL NOT BE PLACED ON THE STONE FILL IN THE AREA UNDER THE BRIDGE. WHENEVER CHANNEL SLOPE INTERSECTS ROADWAY SUBBASE, GRUBBING MATERIAL SHALL BEGIN AT THE BOTTOM OF SUBBASE.

MATERIAL TOLERANCES

(IF USED ON PROJECT)

SURFACE	
- PAVEMENT (TOTAL THICKNESS)	+/- 1/4"
- AGGREGATE SURFACE COURSE	+/- 1/2"
SUBBASE	+/- 1"
SAND BORROW	+/- 1"

PROJECT NAME: RICHMOND	
PROJECT NUMBER: BF 0284(28)	
FILE NAME: sl3c070typ.dgn	PLOT DATE: 16-JUN-2016
PROJECT LEADER: R. YOUNG	DRAWN BY: W. LAMMER
DESIGNED BY: W. LAMMER	CHECKED BY: J. SALVATORI
TYPICAL SECTIONS 2	SHEET 8 OF 51

GPS CONTROL POINTS

SNIPE AZ MK

NORTH = 689236.655
EAST = 1522476.676
ELEV. = 322.130

THE MARK IS LOCATED ON INTERSTATE 89 IN THE SOUTHEAST SIDE OF THE U-TURN BETWEEN MILE MARKERS 74.40 AND 74.45. THIS IS THE MOST NORTHERN OF TWO U-TURNS JUST NORTH OF THE BRIDGES OVER US ROUTE 2 IN JONESVILLE. THE MARK IS SET 20 CM (8 INCHES) BELOW GROUND SURFACE IN THE TOP OF A FENO STYLE MONUMENT. IT IS 7.9 M (25.9 FT) SOUTHEAST OF AND ABOUT 0.6 M (2.0 FT) LOWER THAN THE CENTERLINE OF THE U-TURN, 11.3 M (37.1 FT) SOUTHWEST OF THE SOUTHWEST EDGE OF PAVEMENT OF THE NORTHBOUND LANE, 3.7 M (12.1 FT) NORTHEAST OF THE NORTHEAST EDGE OF PAVEMENT OF THE SOUTHBOUND LANE, 8.3 M (27.2 FT) SOUTHWEST OF THE MOST SOUTHWESTERLY POST FOR A U-TURN SIGN AND 0.3 M (1.0 FT) SOUTHEAST OF A FIBERGLASS WITNESS POST.

SNIPE

NORTH = 690764.170
EAST = 1522549.836
ELEV. = 316.480

TO REACH FROM THE CENTER OF THE I-89 BRIDGES OVER US ROUTE 2 JUST NORTHWEST OF JONESVILLE, GO NORTHERLY ALONG US ROUTE 2 FOR 0.6 MI (1.0 KM) TO THE SITE OF THE MARK ON THE LEFT ABOUT OPPOSITE OF SNIPE IRELAND ROAD. THE MARK IS SET 20 CM (8 INCHES) BELOW GROUND SURFACE IN THE TOP OF A FENO STYLE MONUMENT. IT IS 6.0 M (19.7 FT) SOUTH OF AND ABOUT 0.3 M (1.0 FT) LOWER THAN THE CENTERLINE OF US ROUTE 2, 8.5 M (27.9 FT) WEST OF POLE NO 94-50, 34.6 M (113.5 FT) EAST OF POLE NO 94, 24.3 M (79.7 FT) WEST-SOUTHWEST OF THE SOUTHWEST CORNER OF BRIDGE NO 32 OVER SNIPE IRELAND BROOK AND 4.0 M (13.1 FT) WEST-SOUTHWEST OF THE WEST-SOUTHWEST END OF A STEEL BEAM GUARD RAIL POST.

GPS POINTS SET BY VTrans GSU 5/20/13

TRAVERSE TIES

HVCTRL #3

NORTH = 690829.658
EAST = 1521678.345
ELEV. = 329.394

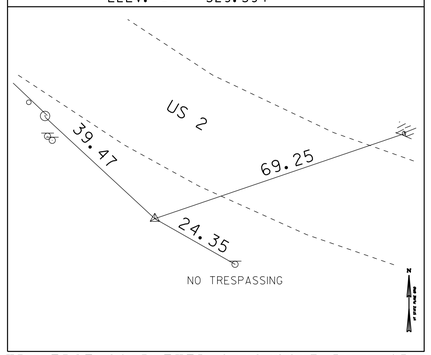

HVCTRL #4

NORTH = 691782.711
EAST = 1519542.675
ELEV. = 350.527

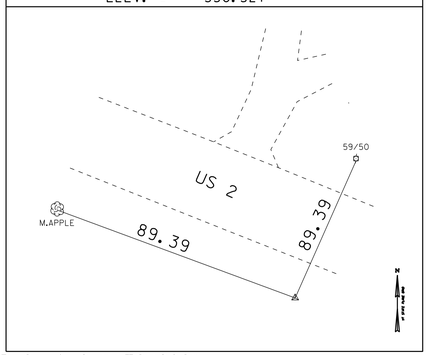

HVCRTL

NORTH =
EAST =
ELEV. =

NORTH =
EAST =
ELEV. =

NORTH =
EAST =
ELEV. =

TRAVERSE COMPLETED 6/12/2013 BY L.ORVIS P.C. & G.HITCHCOCK

ALIGNMENT TIES

NORTH =
EAST =
ELEV. =

NORTH =
EAST =
ELEV. =

NORTH =
EAST =
ELEV. =

NORTH =
EAST =
ELEV. =

NORTH =
EAST =
ELEV. =

DATUM

VERTICAL NAVD 88
HORIZONTAL NAD 83 (2011)
ADJUSTMENT COMPASS

PROJECT NAME: RICHMOND
PROJECT NUMBER: BF 0284(28)

FILE NAME: survey\x13C070ti.dgn
PROJECT LEADER: R. YOUNG
DESIGNED BY: VTRANS
TIE SHEET

PLOT DATE: 16-JUN-2016
DRAWN BY: G. HITCHCOCK
CHECKED BY: P. BEYOR
SHEET 9 OF 51

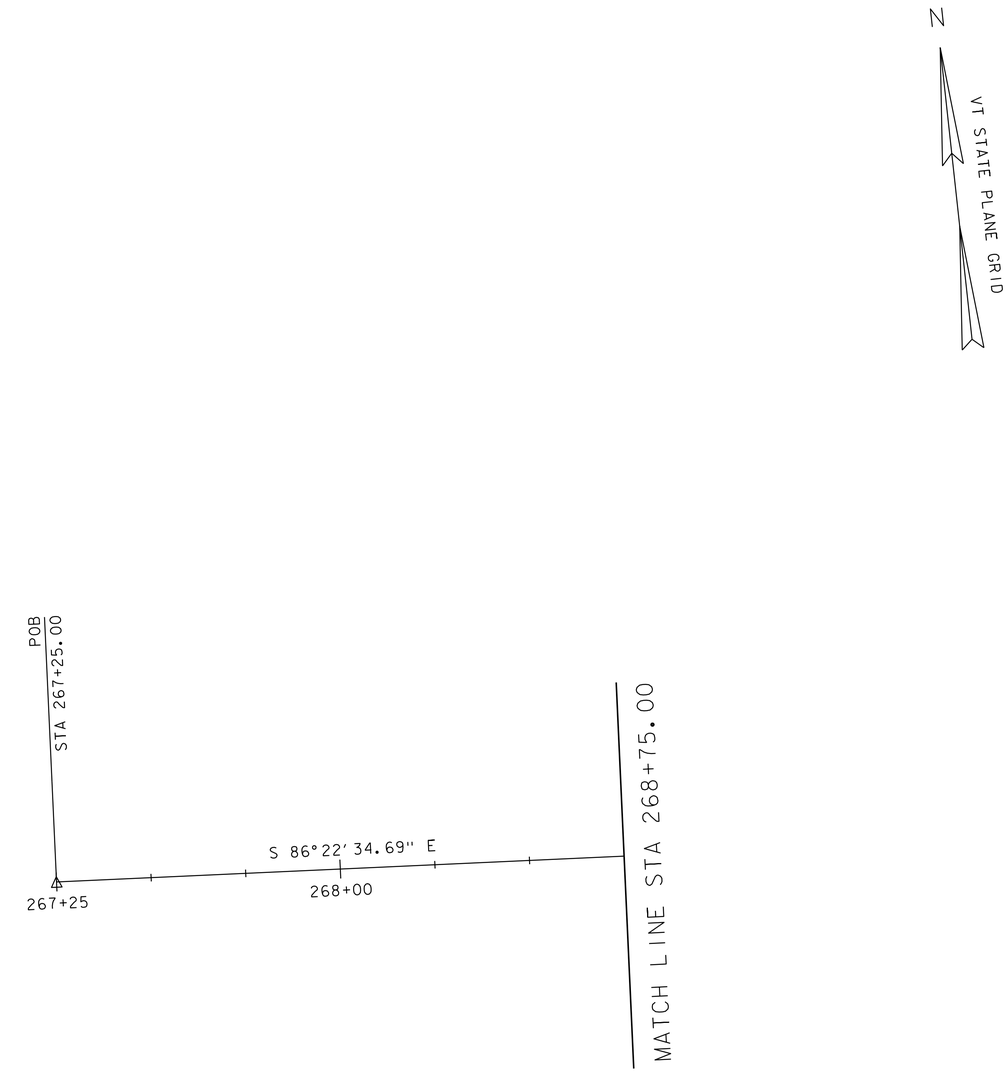

SCALE 1" = 20'-0"
20 0 20

PROJECT NAME: RICHMOND	
PROJECT NUMBER: BF 0284(28)	
FILE NAME: sl3c070bdr_alg.dgn	PLOT DATE: 16-JUN-2016
PROJECT LEADER: R. YOUNG	DRAWN BY: S. COLEY
DESIGNED BY: S. COLEY	CHECKED BY: W. LAMMER
ALIGNMENT SHEET 1	SHEET 10 OF 51

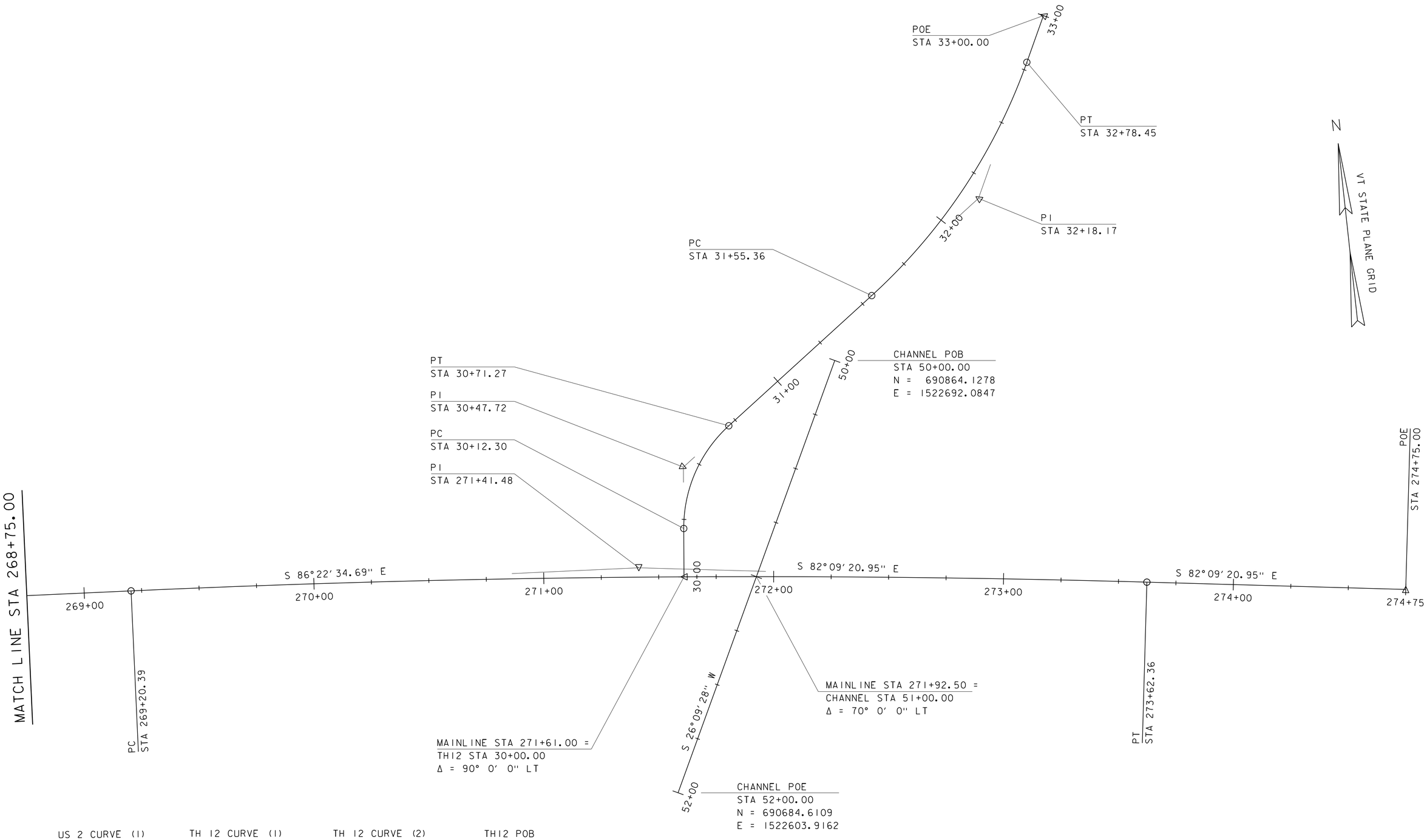

US 2 CURVE (1)
DELTA = 4°13'14"
D = 0°57'18"
R = 6000.00'
T = 221.08'
L = 441.97'
E = 4.07'

TH 12 CURVE (1)
DELTA = 47°58'32"
D = 95°29'35"
R = 60.00'
T = 26.70'
L = 50.24'
E = 5.67'

TH 12 CURVE (2)
DELTA = 28°05'46"
D = 22°49'37"
R = 251.00'
T = 62.81'
L = 123.08'
E = 7.74'

TH12 POB
STA 30+00.00
N = 690777.7008
E = 1522616.6807

SCALE 1" = 20'-0"
20 0 20

PROJECT NAME: RICHMOND	
PROJECT NUMBER: BF 0284(28)	
FILE NAME: sl3c070bdr_alg.dgn	PLOT DATE: 16-JUN-2016
PROJECT LEADER: R. YOUNG	DRAWN BY: S. COLEY
DESIGNED BY: S. COLEY	CHECKED BY: W. LAMMER
ALIGNMENT SHEET 2	SHEET 11 OF 51

COLD PLANING
BITUMINOUS PAVEMENT
STA. 269+00 - 269+50
STA. 274+00 - 274+50

REMOVAL AND DISPOSAL OF GUARDRAIL
STA. 271+09.17 - 271+74.76 RT
STA. 271+99.99 - 272+70.84 RT
STA. 30+15.12 - 30+82.48 RT
STA. 272+11.12 - 272+80.74 LT

REMOVAL OF EXISTING DELINEATOR
STA. 271+09.17 RT
STA. 272+70.84 RT

BITUMINOUS CONCRETE PAVEMENT
STA. 269+00 - 274+50
STA. 30+15 - 31+17

PRECAST REINFORCED CONCRETE
OR CAST-IN-PLACE CURB OPTION
STA. 271+33.52 - 271+73.49 RT
STA. 30+52.39 - 271+84.46 LT
STA. 272+02.29 - 272+42.42 RT
STA. 272+13.12 - 272+53.01 LT

18" OPTION PIPE
STA. 271+22.92 LT - 271+54.02 RT

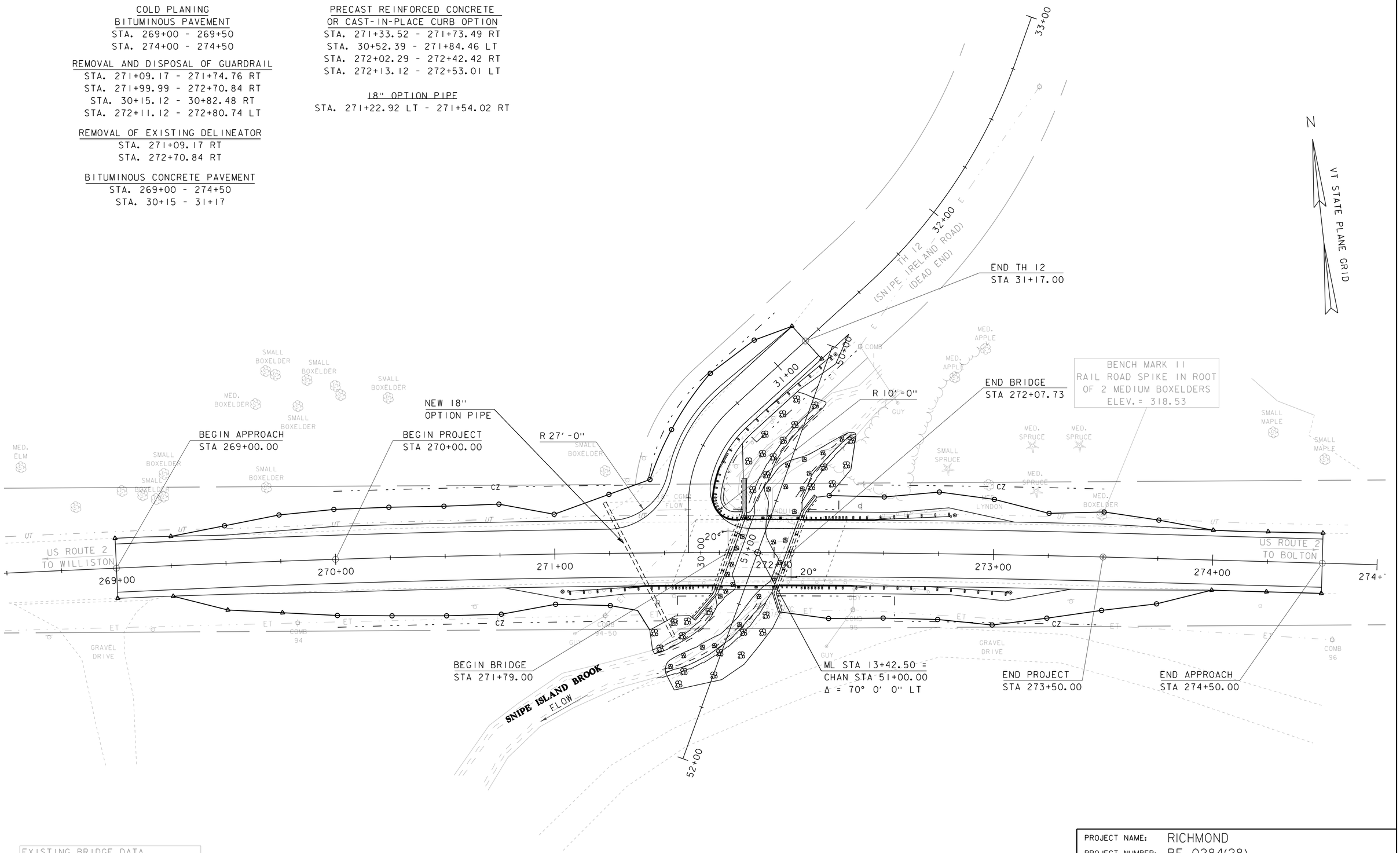

EXISTING BRIDGE DATA
SINGLE SPAN CONCRETE T-BEAM
BUILT 1929
25' LONG, 27'-7" CURB TO CURB

SCALE 1" = 20'-0"
20 0 20

PROJECT NAME: RICHMOND	
PROJECT NUMBER: BF 0284(28)	
FILE NAME: sl3c070bdr.dgn	PLOT DATE: 16-JUN-2016
PROJECT LEADER: R. YOUNG	DRAWN BY: S. COLEY
DESIGNED BY: S. COLEY	CHECKED BY: W. LAMMER
LAYOUT SHEET	SHEET 12 OF 51

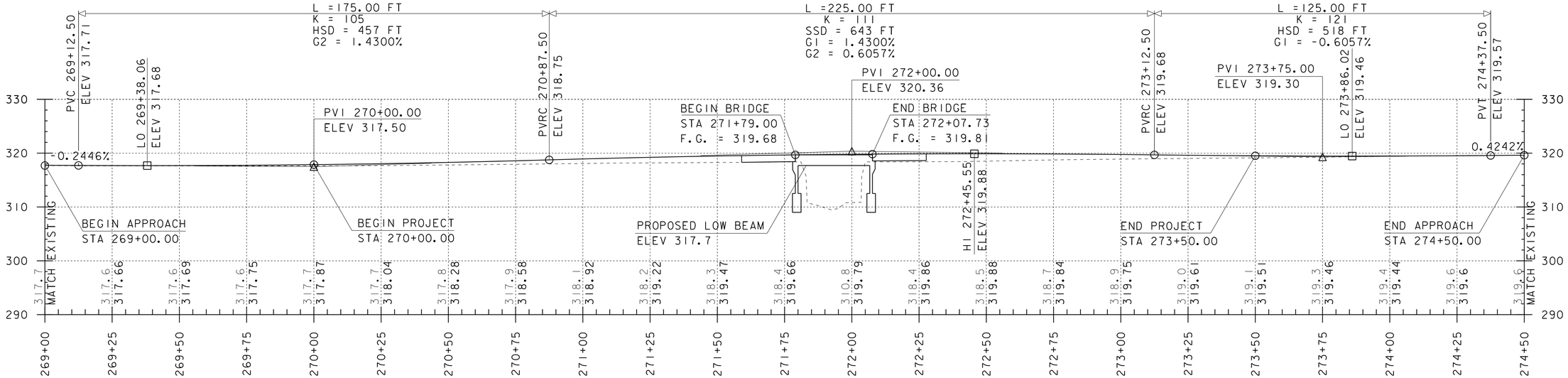

US 2 PROFILE

HOR. SCALE 1" = 20'-0"
VER. SCALE 1" = 10'-0"

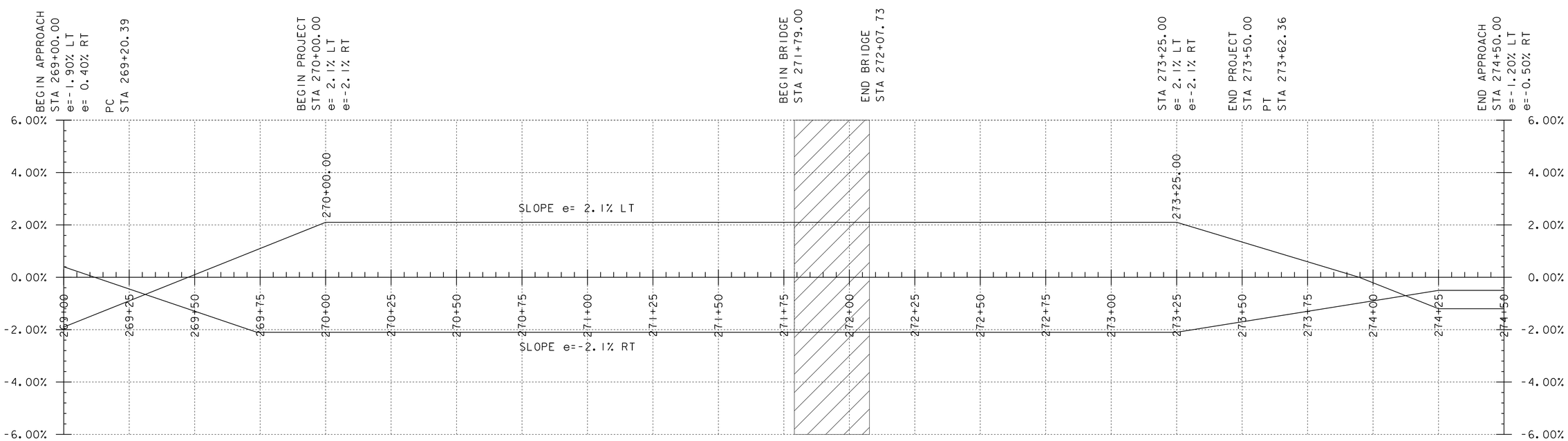

US 2 BANKING DIAGRAM

HOR. 1" = 20'-0"
VER. 1" = 10'-0"

NOTE:

THE GRADES SHOWN TO THE NEAREST TENTH ARE THE EXISTING GROUND ELEVATIONS ALONG THE PROPOSED ALIGNMENT.

THE GRADES SHOWN TO THE NEAREST HUNDREDTH ARE THE FINISHED GROUND ELEVATIONS ALONG THE PROPOSED ALIGNMENT.

PROJECT NAME: RICHMOND	
PROJECT NUMBER: BF 0284(28)	
FILE NAME: 13c070profile.dgn	PLOT DATE: 16-JUN-2016
PROJECT LEADER: R. YOUNG	DRAWN BY: S. COLEY
DESIGNED BY: S. COLEY	CHECKED BY:
MAINLINE PROFILE AND BANKING DIAGRAM	SHEET 13 OF 51

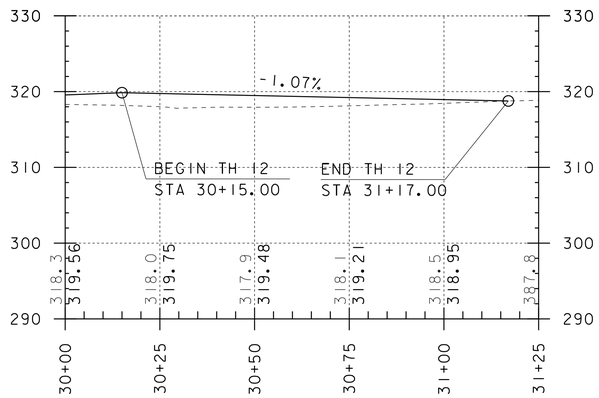

TH-12 PROFILE

HOR. SCALE 1" = 20'-0"
VER. SCALE 1" = 10'-0"

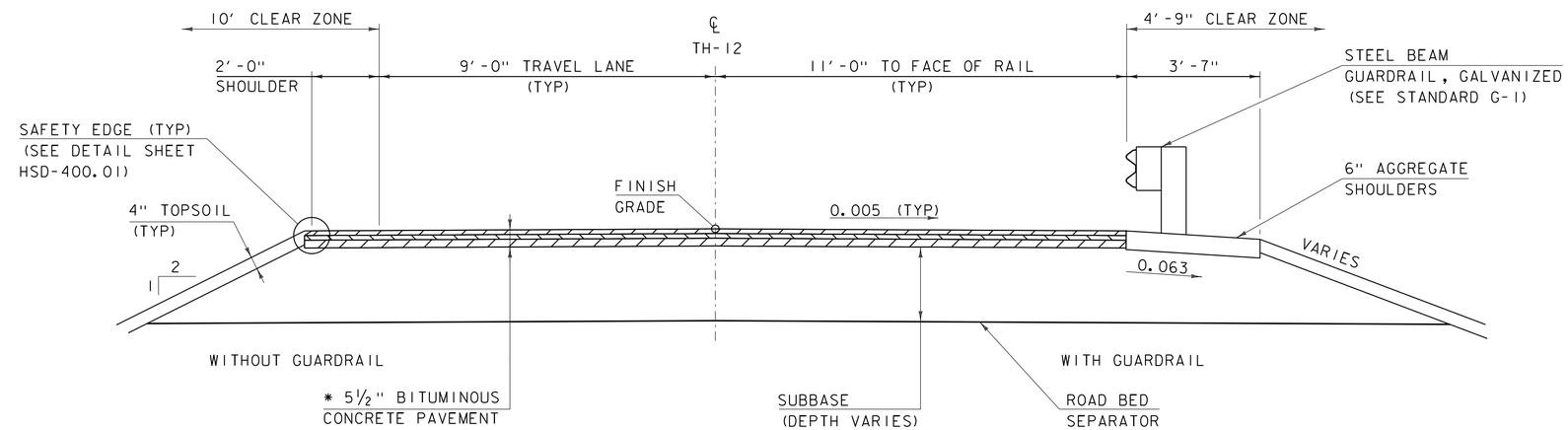

TH-12 TYPICAL SECTION

SCALE ½" = 1'-0"

* 1½" SUPERPAVE BITUMINOUS CONCRETE PAVEMENT TYPE IVS OVER
1½" SUPERPAVE BITUMINOUS CONCRETE PAVEMENT TYPE IVS OVER
2½" SUPERPAVE BITUMINOUS CONCRETE PAVEMENT TYPE IIS

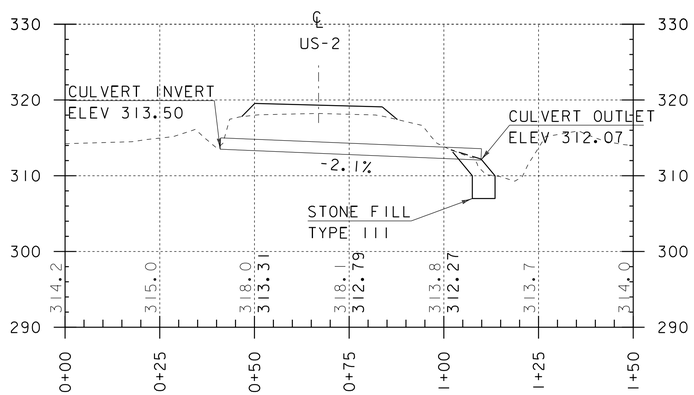

OPTION PIPE

HOR. SCALE 1" = 20'-0"
VER. SCALE 1" = 10'-0"

NOTE:

THE GRADES SHOWN TO THE NEAREST TENTH ARE THE EXISTING GROUND ELEVATIONS ALONG THE PROPOSED ALIGNMENT.

THE GRADES SHOWN TO THE NEAREST HUNDREDTH ARE THE FINISHED GROUND ELEVATIONS ALONG THE PROPOSED ALIGNMENT.

PROJECT NAME: RICHMOND	
PROJECT NUMBER: BF 0284(28)	
FILE NAME: 13c070profile.dgn	PLOT DATE: 16-JUN-2016
PROJECT LEADER: R. YOUNG	DRAWN BY: S. COLEY
DESIGNED BY: S. COLEY	CHECKED BY:
TH 12 PROFILE AND TYPICAL SECTION	SHEET 14 OF 51

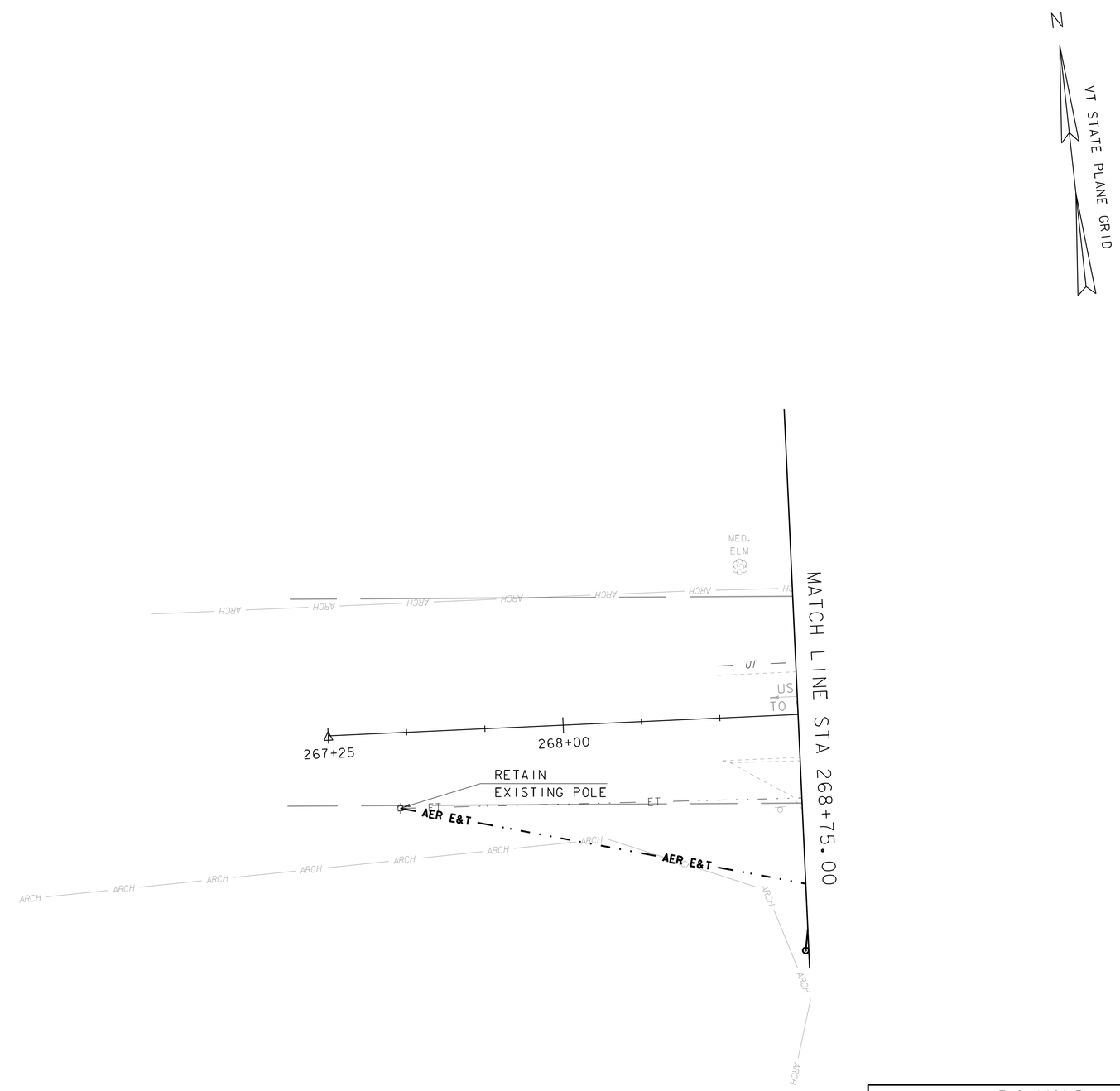

NOTES:

1. UTILITY RELOCATION TO BE DONE BY OTHERS.

2. RETAIN EXISTING POLE AT APPROXIMATELY STA 267+50 AND ADD ANCHORS AS REQUIRED.

SCALE 1" = 20'-0"
20 0 20

PROJECT NAME: RICHMOND	
PROJECT NUMBER: BF 0284(28)	
FILE NAME: sl3c070bdr.dgn	PLOT DATE: 16-JUN-2016
PROJECT LEADER: R. YOUNG	DRAWN BY: S. COLEY
DESIGNED BY: S. COLEY	CHECKED BY: W. LAMMER
UTILITY RELOCATION PLAN 1	SHEET 15 OF 51

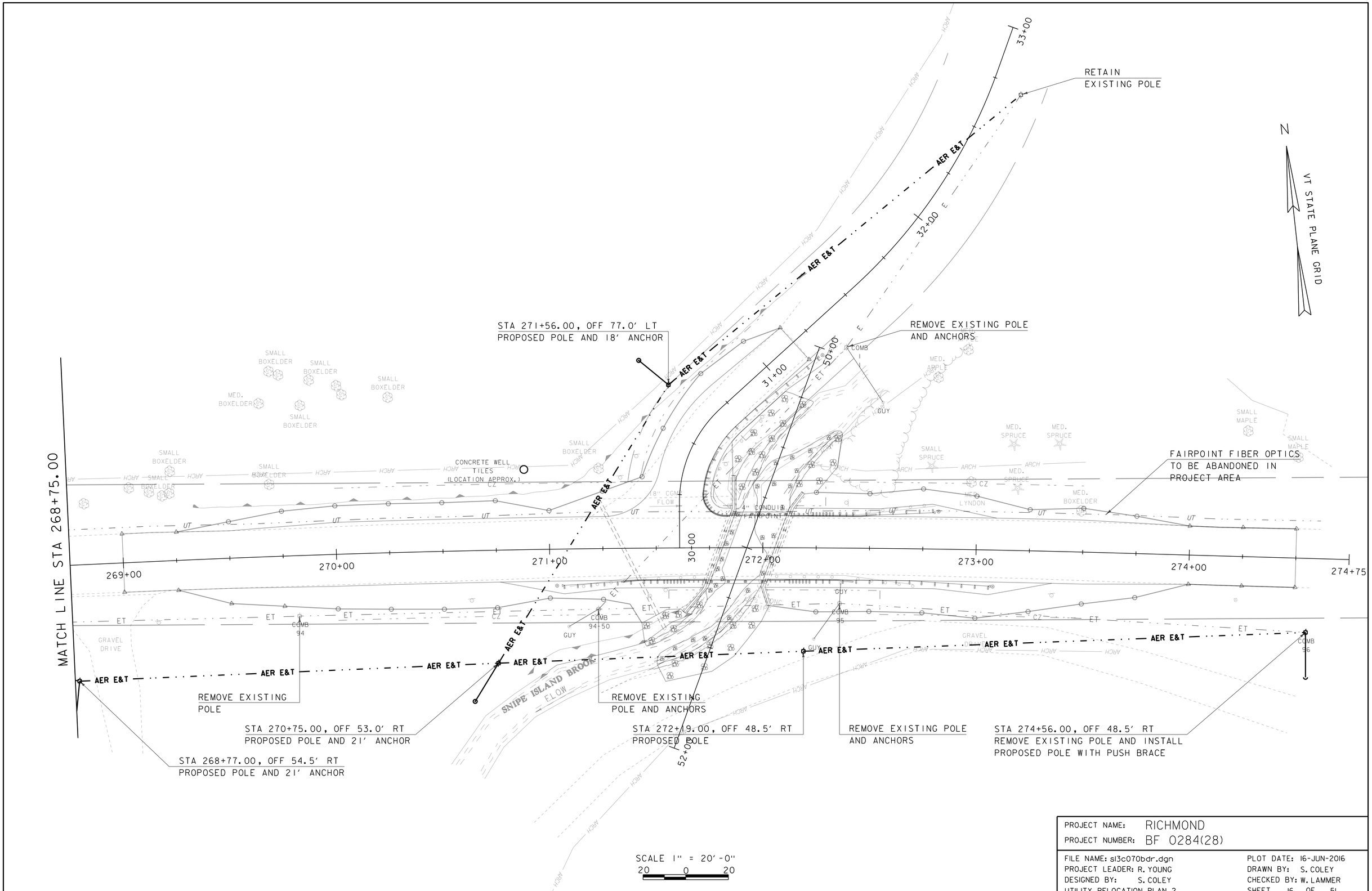

PROJECT NAME: RICHMOND	
PROJECT NUMBER: BF 0284(28)	
FILE NAME: sl3c070bdr.dgn	PLOT DATE: 16-JUN-2016
PROJECT LEADER: R. YOUNG	DRAWN BY: S. COLEY
DESIGNED BY: S. COLEY	CHECKED BY: W. LAMMER
UTILITY RELOCATION PLAN 2	SHEET 16 OF 51

DURABLE 4 INCH WHITE LINE
STA 269+00 - 274+50 RT
STA 269+00 - 30+50 LT
STA 30+50 - 274+50 LT

DURABLE 4 INCH YELLOW LINE (DOUBLE)
STA 269+00 - 271+25 CL
STA 271+75 - 274+50 CL
STA 30+19 - 30+50 CL

DURABLE 24" STOP BAR
STA. 30+19.11 LT

DURABLE LETTER OR SYMBOL (STOP)
STA. 271+49 - 271+59 LT

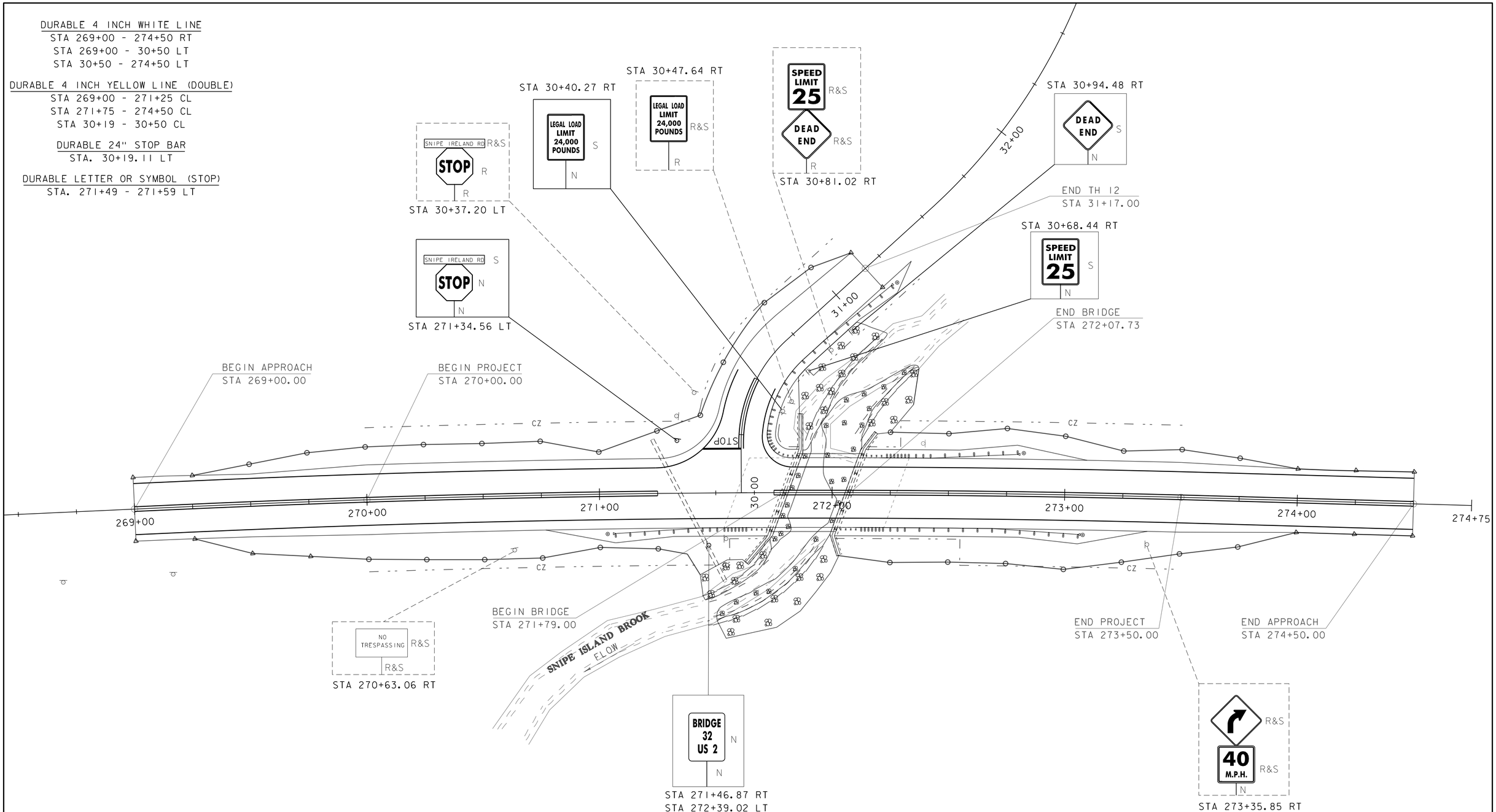

SIGN LEGEND
N = NEW
R = REMOVE
S = SALVAGE
R&S = REMOVE & SALVAGE
RET = RETAIN

SCALE 1" = 20'-0"
20 0 20

PROJECT NAME: RICHMOND	
PROJECT NUMBER: BF 0284 (28)	
FILE NAME: sl3c070sign.dgn	PLOT DATE: 16-JUN-2016
PROJECT LEADER: R. YOUNG	DRAWN BY: S. COLEY
DESIGNED BY: S. COLEY	CHECKED BY: W. LAMMER
SIGN AND PAVEMENT MARKINGS SHEET	SHEET 17 OF 51

STATE OF VERMONT
AGENCY OF TRANSPORTATION

TRAFFIC SIGN SUMMARY SHEET

MILE MARKER, STATION OR SIGN NUMBER	SIGN LEGEND	SIGN DIMENSIONS EACH	WIDTH (in)	HEIGHT (in)	NEW & SALVAGED SIGNS "A"	"B"	SALV SIGN	SALV TIS	EXIST POST RETAIN	SALVAGE	NEW SIGN POSTS NO. OF POST	FLANGED CHANNEL (LB / FT) 1.12	2.00	3.00	SQUARE STEEL (in) (LB / FT) 1.75 1.88	2.00 2.42	2.50 3.35	ANCHOR	SLEEVE	TUBULAR ALUMINUM Ø (IN) (LB / FT) 3.00 1.30	4.00 1.70	4.0 MOD 1.70	FOUNDATION	TUBULAR STEEL Ø (IN) (LB / FT) 3.00 7.60	3.50 9.00	4.00 10.80	5.00 14.60	W-SHAPE STEEL FTG. SIZE 24"	30"	WEIGHT	POST SIZE	SIGN FRAME REQUIRED	REMARKS	SIGN DETAIL DETAIL ON SHEET NUMBER	STANDARD SHEET NUMBER
OPTION ITEMS																																				
271+35 LT	STOP	1	30	30	6.25											15																	R1-1		
	SNIPE IRELAND RD	1	42	12			X																													
271+47 RT	BRIDGE 25 US 2	1	6	8	0.33						1				8			X															VD-701		T-42
272+40 LT	BRIDGE 25 US 2	1	6	8	0.33						1				8			X															VD-701		T-42
273+36 RT		1	30	30			X									15																	W1-2R		E-151
	40 M.P.H.	1	24	24			X																										W13-1		E-155
30+48 RT	LEGAL LOAD LIMIT 24,000 POUNDS	1	24	30			X									15																	VR-017		T-70
30+81 RT	SPEED LIMIT 25	1	24	30			X									15																	R2-1		
	DEAD END	1	30	30			X																													
FINAL POST LENGTHS ARE TO BE DETERMINED IN THE FIELD. POST SIZES ARE COMPUTED BASED ON INFORMATION FURNISHED ON THE STANDARD SHEETS AND THE VTRANS "SIGN POST DESIGN GUIDELINE."												FT .	FT .	FT .	FT 16.	FT 60.	FT .	XXXXX XXXXX XXXXX XXXXX	EA .	LB .	LB .	LB .		LB .	LB .	LB .	LB .							
	TOTALS				SF 6.92	SF .	EA. 6.	SF .	XXXXXXXXXXX XXXXXXXXXXX XXXXXXXXXXX			FT .			FT 76.					LB .			EA. .	LB .			EA. .	EA. .	LB .					

PROJECT NAME: **RICHMOND**
PROJECT NUMBER: **BF 0284(28)**

FILE NAME: **s13c070tss.dgn** PLOT DATE: 16-JUN-2016
PROJECT MANAGER: **R. YOUNG** DRAWN BY: **W. LAMMER**
DESIGNED BY: **S. COLEY** CHECKED **J. SALVATORI**
TRAFFIC SIGN SUMMARY SHEET SHEET 18 OF 51

DELINEATOR WITH STEEL POST (TYPE I)
STA 271+03.28 RT (BLUE)
STA 273+08.06 RT (GREEN)
STA 272+82.17 LT (BLUE)
STA 31+23.03 RT (GREEN)

MANUFACTURED TERMINAL SECTION, FLARED (TYP)
STA 271+05.69 - 271+44.24 RT
STA 30+82.78 - 31+21.23 RT
STA 272+68.94 - 273+06.99 RT
STA 272+42.19 - 272+80.57 LT

STEEL BEAM GUARDRAIL, GALVANIZED
STA 30+39.42 - 30+82.78 RT
STA 272+31.35 - 272+68.94 RT

GUARDRAIL APPROACH SECTION, GALVANIZED 2 RAIL BOX BEAM
STA 271+44.24 - 271+73.39 RT
STA 30+39.42 - 271+84.57 LT
STA 272+02.20 - 272+31.35 RT
STA 272+13.21 - 272+42.19 LT

BRIDGE RAILING, GALVANIZED 2 RAIL BOX BEAM
STA 271+73.39 - 272+02.20 RT
STA 271+84.57 - 272+13.21 LT

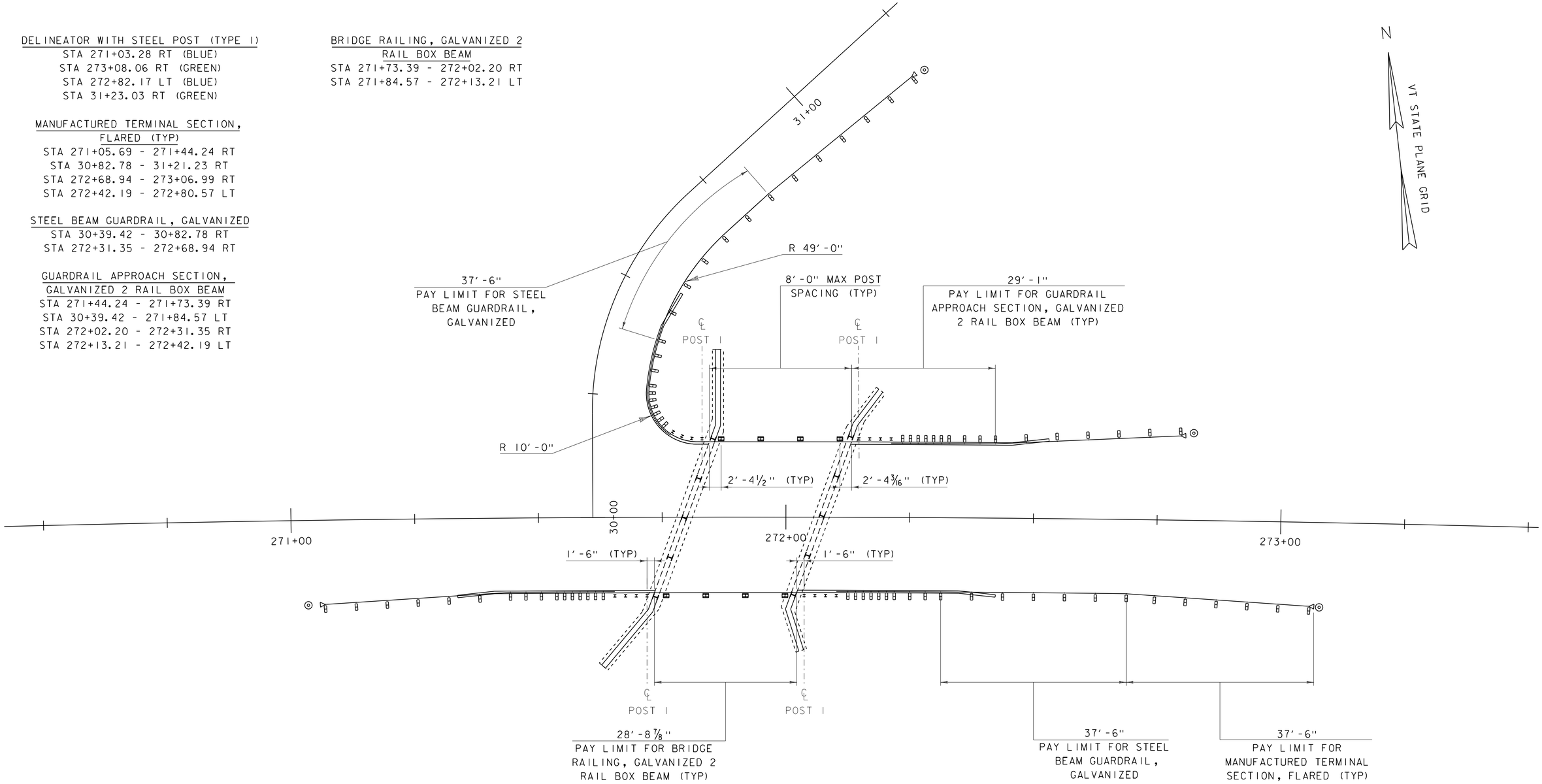

NOTES:

1) ALL DIMENSIONS ARE TAKEN ALONG THE FACE OF THE RAIL

2) SEE STANDARDS G-1, S-360A, S-360B, AND T-40 FOR FURTHER DETAILS

SCALE 1" = 10'-0"
10 0 10

PROJECT NAME: RICHMOND	
PROJECT NUMBER: BF 0284 (28)	
FILE NAME: s13c070rail.dgn	PLOT DATE: 16-JUN-2016
PROJECT LEADER: R. YOUNG	DRAWN BY: S. COLEY
DESIGNED BY: S. COLEY	CHECKED BY: J. SALVATORI
RAIL LAYOUT SHEET	SHEET 19 OF 51

SOIL CLASSIFICATION

AASHTO

A1	Gravel and Sand
A3	Fine Sand
A2	Silty or Clayey Gravel and Sand
A4	Silty Soil - Low Compressibility
A5	Silty Soil - Highly Compressible
A6	Clayey Soil - Low Compressibility
A7	Clayey Soil - Highly Compressible

ROCK QUALITY DESIGNATION

R.Q.D. (%)	ROCK DESCRIPTION
<25	Very Poor
25 to 50	Poor
51 to 75	Fair
76 to 90	Good
>90	Excellent

SHEAR STRENGTH

UNDRAINED SHEAR STRENGTH IN P.S.F.	CONSISTENCY
<250	Very Soft
250-500	Soft
500-1000	Med. Stiff
1000-2000	Stiff
2000-4000	Very Stiff
>4000	Hard

CORRELATION GUIDE OF "N" TO DENSITY/CONSISTENCY

DENSITY (GRANULAR SOILS)		CONSISTENCY (COHESIVE SOILS)	
N	DESCRIPTIVE TERM	N	DESCRIPTIVE TERM
<5	Very Loose	<2	Very Soft
5-10	Loose	2-4	Soft
11-24	Med. Dense	5-8	Med. Stiff
25-50	Dense	9-15	Stiff
>50	Very Dense	16-30	Very Stiff
		31-60	Hard
		>60	Very Hard

COMMONLY USED SYMBOLS

▼	Water Elevation
⊗	Standard Penetration Boring
⊕	Auger Boring
⊙	Rod Sounding
S	Sample
N	Standard Penetration Test Blow Count Per Foot For: 2" O.D. Sampler 1 3/8" I.D. Sampler Hammer Weight Of 140 Lbs. Hammer Fall Of 30"
VS	Field Vane Shear Test
US	Undisturbed Soil Sample
B	Blast
DC	Diamond Core
MD	Mud Drill
WA	Wash Ahead
HSA	Hollow Stem Auger
AX	Core Size 1 1/8"
BX	Core Size 1 5/8"
NX	Core Size 2 1/8"
M	Double Tube Core Barrel Used
LL	Liquid Limit
PL	Plastic Limit
PI	Plasticity Index
NP	Non Plastic
w	Moisture Content (Dry Wgt. Basis)
D	Dry
M	Moist
MTW	Moist To Wet
W	Wet
Sat	Saturated
Bo	Boulder
Gr	Gravel
Sa	Sand
Si	Silt
Cl	Clay
HP	Hardpan
Le	Ledge
NLTD	No Ledge To Depth
CNPF	Can Not Penetrate Further
TLOB	Top of Ledge Or Boulder
NR	No Recovery
Rec.	Recovery
%Rec.	Percent Recovery
RQD	Rock Quality Designation
CBR	California Bearing Ratio
<	Less Than
>	Greater Than
R	Refusal (N > 100)
VTSPG	NAD83 - See Note 7

COLOR

blk	Black	pnk	Pink
bl	Blue	pu	Purple
brn	Brown	rd	Red
dk	Dark	tn	Tan
gry	Gray	wh	White
gn	Green	yel	Yellow
lt	Light	mltc	Multicolored
or	Orange		

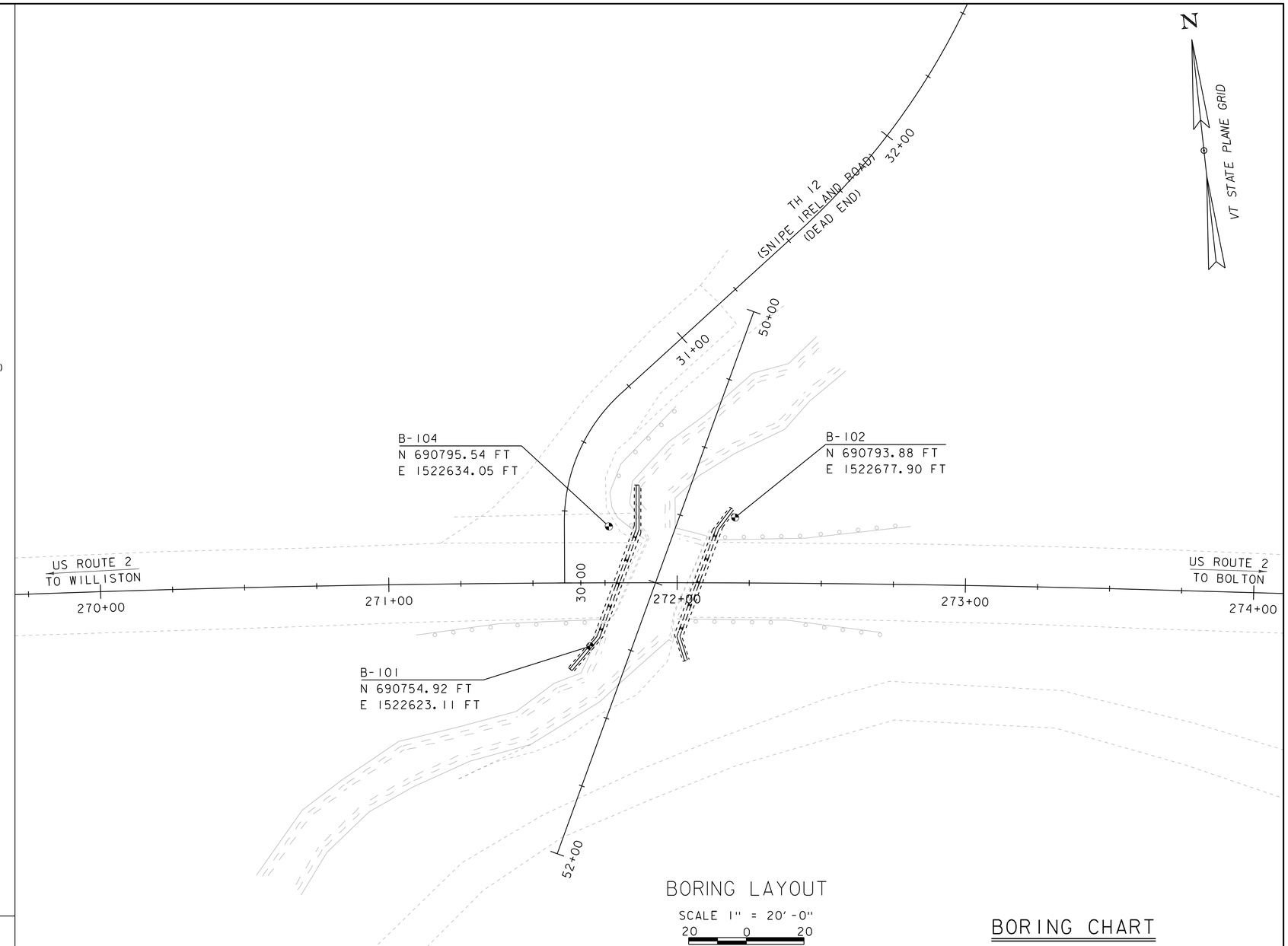

BORING LAYOUT

SCALE 1" = 20'-0"
20 0 20

DEFINITIONS (AASHTO)

BEDROCK (LEDGE) - Rock in its native location of indefinite thickness.

BOULDER - A rock fragment with an average dimension > 12 inches.

COBBLE - Rock fragments with an average dimension between 3 and 12 inches.

GRAVEL - Rounded particles of rock < 3" and > 0.0787" (#10 sieve).

SAND - Particles of rock < 0.0787" (#10 sieve) and > 0.0029" (#200 sieve).

SILT - Soil < 0.0029" (#200 sieve), non or slightly plastic and exhibits no strength when air-dried.

CLAY - Fine grained soil, exhibits plasticity when moist and considerable strength when air-dried.

VARVED - Alternate layers of silt and clay.

HARDPAN - Extremely dense soil, cemented layer, not softened when wet.

MUCK - Soft organic soil (containing > 10% organic material.

MOISTURE CONTENT - Weight of water divided by dry weight of soil.

FLOWING SAND - Granular soil so saturated (loose) that it flows into drill casing during extraction of wash rod.

STRIKE - Angle from magnetic north to line of intersection of bed with a horizontal plane.

DIP - Inclination of bed with a horizontal plane.

GENERAL NOTES

1. The subsurface explorations shown herein were made between _____ and _____ by the Agency.
2. Soil and rock classifications, properties and descriptions are based on engineering interpretation from available subsurface information by the Agency and may not necessarily reflect actual variations in subsurface conditions that may be encountered between individual boring or sample locations.
3. Observed water levels and/or conditions indicated are as recorded at the time of exploration and may vary according to the prevailing rainfall, methods of exploration and other factors.
4. Engineering judgment was exercised in preparing the subsurface information presented herein. Analysis and interpretation of subsurface data was performed and interpreted for Agency design and estimating purposes. Presentation of the information in the Contract is intended to provide the Contractor access to the same data available to the Agency. The subsurface information is presented in good faith and is not intended as a substitute for personal investigation, independent interpretation, independent analysis or judgment by the Contractor.
5. Pictorial structure details shown on the boring plan layout or soils profile are for illustrative purposes only and may not accurately portray final contract details.
6. Terminology used on boring logs to describe the hardness, degree of weathering, and spacing of fractures, joints and other discontinuities in the bedrock is defined in the AASHTO Manual on Subsurface Investigations, 1988.
7. Northing and Easting coordinates are shown in Vermont State Plane Grid North American Datum 1983 in meters and survey feet.

BORING CHART

HOLE NO.	SURV. STATION	OFFSET	GROUND ELEV.	ELEV. TLOB
B-101	271+70.0	22.0 RT	312.3	UNK
B-102	272+20.0	22.7 LT	316.8	UNK
B-104	271+76.3	19.5 LT	317.7	UNK

PROJECT NAME: RICHMOND
PROJECT NUMBER: BF 0284(28)

FILE NAME: s13c070boring.dgn
PROJECT LEADER: R. S. YOUNG
DESIGNED BY: W. LAMMER
BORING INFORMATION SHEET

PLOT DATE: 16-JUN-2016
DRAWN BY: S. COLEY
CHECKED BY: W. LAMMER
SHEET 20 OF 51

STATE OF VERMONT
AGENCY OF TRANSPORTATION
CONSTRUCTION AND
MATERIALS BUREAU
CENTRAL LABORATORY

BORING LOG

Richmond
BF 0284(28)
US-2 Br #32

Boring No.: **B-101**
Page No.: 1 of 1
Pin No.: 13c070
Checked By: CEE

Boring Crew: GARROW, NIETO
Date Started: 9/15/15 Date Finished: 9/15/15
VTSPG NAD83: N 690754.92 ft E 1522623.11 ft
Station: 271+70 Offset: 22.00
Ground Elevation: 312.3 ft

	Casing	Sampler
Type:	WB	SS
I.D.:	4 in	1.5 in
Hammer Wt:	N.A.	140 lb.
Hammer Fall:	N.A.	30 in.
Hammer/Rod Type:	Auto/AWJ	
Rig:	CME 45C SKID	C. = n/a

Groundwater Observations

Date	Depth (ft)	Notes
09/15/15	4.1	After Drilling.

BOTTOM OF PILE CAP
ELEV. 309.00
ESTIMATED PILE
LENGTH OF 100 FT
BELOW PILE CAP

Depth (ft)	Strata (1)	CLASSIFICATION OF MATERIALS (Description)	Blows/6" (N Value)	Moisture Content %	Gravel %	Sand %	Fines %
		A-1-a, SaGr, blk-brn, Moist, Rec. = 1.0 ft, Lab Note: A lot of asphalt pavement and some wood fiber was within sample.	2-9-8-7 (17)	9.4	73.0	24.3	2.7
		A-1-a, SaGr, gry, Moist, Rec. = 0.7 ft	14-7-9-4 (16)	12.4	66.1	26.4	7.5
5		A-1-b, GrSa, brn, Moist, Rec. = 0.6 ft	5-2-1-3 (3)	21.0	24.6	62.9	12.5
		No Recovery, 6.0 ft - 8.0 ft	6-2-2-1 (4)				
		Field Note:, Cleaned out casing.					
		A-2-4, SiSa, gry, Moist, Rec. = 0.8 ft, Lab Note: Sample tested Non-Plastic.	2-2-2-3 (4)	23.4	7.8	68.9	23.3
10		A-1-b, Sa, gry, Moist, Rec. = 0.7 ft	3-2-2-4 (4)	18.9	11.1	80.0	8.9
		A-1-b, Sa, gry, Moist, Rec. = 0.8 ft	2-2-2-3 (4)	18.6	13.8	77.0	9.2
15		No Recovery, 14.0 ft - 16.0 ft	4-4-3-4 (7)				
20		A-1-a, SaGr, gry, Moist, Rec. = 0.6 ft, Lab Note: Broken Rock was within sample.	13-7-10-6 (17)	8.9	67.6	24.3	8.1
25		A-2-4, Sa, Lt/brn-gry, Moist, Rec. = 1.0 ft	5-3-3-4 (6)	20.5	19.5	63.3	17.2
30		A-3, Sa, Lt/brn, Moist, Rec. = 1.0 ft	4-4-5-6 (9)	22.2		92.1	7.9
35		No Recovery, 35.0 ft - 37.0 ft	4-7-4-6 (11)				
		Hole stopped @ 37.0 ft					
40		Remarks: Hole Collapsed at 4.2 feet.					

Notes:
1. Stratification lines represent approximate boundary between material types. Transition may be gradual.
2. N Values have not been corrected for hammer energy. C is the hammer energy correction factor.
3. Water level readings have been made at times and under conditions stated. Fluctuations may occur due to other factors than those present at the time measurements were made.

BORING LOG 2 RICHMOND BF0284(28).GPJ VERMONT AOT.GDT 11/12/15

STATE OF VERMONT
AGENCY OF TRANSPORTATION
CONSTRUCTION AND
MATERIALS BUREAU
CENTRAL LABORATORY

BORING LOG

Richmond
BF 0284(28)
US-2 Br #32

Boring No.: **B-102**
Page No.: 1 of 1
Pin No.: 13c070
Checked By: CEE

Boring Crew: HOOK, GARROW, NIETO
Date Started: 9/11/15 Date Finished: 9/14/15
VTSPG NAD83: N 690793.88 ft E 1522677.90 ft
Station: 272+20 Offset: -22.70
Ground Elevation: 316.8 ft

	Casing	Sampler
Type:	WB	SS
I.D.:	4 in	1.5 in
Hammer Wt:	N.A.	140 lb.
Hammer Fall:	N.A.	30 in.
Hammer/Rod Type:	Auto/AWJ	
Rig:	CME 45C SKID	C. = n/a

Groundwater Observations

Date	Depth (ft)	Notes
09/14/15	8.0	Before drilling,

BOTTOM OF PILE CAP
ELEV. 309.00
ESTIMATED PILE
LENGTH OF 100 FT
BELOW PILE CAP

Depth (ft)	Strata (1)	CLASSIFICATION OF MATERIALS (Description)	Blows/6" (N Value)	Moisture Content %	Gravel %	Sand %	Fines %
		A-2-4, GrSiSa, brn-Lt/brn, Moist, Rec. = 1.4 ft, Lab Note: Grass roots and wood fiber was within sample.	WH-1-2-3 (3)	8.3	30.5	53.7	15.8
		A-1-b, SaGr, brn, Moist, Rec. = 10.0 ft	1-2-4-3 (6)	6.1	48.5	36.1	15.4
5		A-2-4, SiSa, brn, Moist, Rec. = 1.1 ft	2-4-2-5 (6)	18.7	12.8	61.2	26.0
		No Recovery, 6.0 ft - 8.0 ft	5-7-8-14 (15)				
		A-1-a, SaGr, Lt/brn, Moist, Rec. = 0.6 ft	6-10-11-8 (21)	10.1	57.7	31.6	10.7
10		Field Note:, Cleaned out casing.					
		No Recovery, 10.0 ft - 12.0 ft	5-3-2-1 (5)				
		A-2-4, GrSa, brn, MTW, Rec. = 0.4 ft	1-2-2-3 (4)	23.9	20.4	60.8	18.8
15		No Recovery, 14.0 ft - 16.0 ft	3-2-1-1 (3)				
		No Recovery, 16.0 ft - 18.0 ft	1-2-1-4 (3)				
20		A-1-b, SaGr, brn-Lt/brn, Moist, Rec. = 1.3 ft	2-4-6-6 (10)	12.5	49.4	40.4	10.2
25		Field Note:, Cleaned out casing.					
		A-2-4, Sa, Lt/brn, Moist, Rec. = 1.2 ft	3-2-4-5 (6)	21.1	4.9	78.7	16.4
30		No Recovery, 30.0 ft - 32.0 ft	WH-3-3-5 (6)				
35		A-3, Sa, brn, Moist, Rec. = 1.3 ft	1-4-4-5 (8)	21.2	4.8	89.4	5.8
40		Visual Description:, SaSi, brn, Moist, Rec. = 0.1 ft, Lab Note: Possible thin layer of clay. Insufficient sample size for testing.	1-6-6-9 (12)	35.0			
		Hole stopped @ 42.0 ft					
45		Remarks: Hole Collapsed at 32.0 feet.					

Notes:
1. Stratification lines represent approximate boundary between material types. Transition may be gradual.
2. N Values have not been corrected for hammer energy. C is the hammer energy correction factor.
3. Water level readings have been made at times and under conditions stated. Fluctuations may occur due to other factors than those present at the time measurements were made.

BORING LOG 2 RICHMOND BF0284(28).GPJ VERMONT AOT.GDT 11/12/15

PROJECT NAME: RICHMOND
PROJECT NUMBER: BF 0284(28)

FILE NAME: sl3c070boring.dgn
PROJECT LEADER: R. YOUNG
DESIGNED BY: S. COLEY
BORING LOGS 1

PLOT DATE: 16-JUN-2016
DRAWN BY: S. COLEY
CHECKED BY: ------
SHEET 21 OF 51

STATE OF VERMONT
AGENCY OF TRANSPORTATION
CONSTRUCTION AND
MATERIALS BUREAU
CENTRAL LABORATORY

BORING LOG

Richmond
BF 0284(28)
US-2 Br #32

Boring No.: **B-104**
Page No.: 1 of 1
Pin No.: 13c070
Checked By: CEE

Boring Crew: HOOK, JUDKINS, GARROW
Date Started: 9/10/15 Date Finished: 9/11/15
VTSPG NAD83: N 690795.54 ft E 1522634.05 ft
Station: 271+76.3 Offset: -19.50
Ground Elevation: 317.7 ft

	Casing	Sampler
Type:	WB	SS
I.D.:	4 in	1.5 in
Hammer Wt:	N.A.	140 lb.
Hammer Fall:	N.A.	30 in.
Hammer/Rod Type:	Auto/AWJ	
Rig:	CME 45C SKID	C. = n/a

Groundwater Observations

Date	Depth (ft)	Notes
09/11/15	7.6	After Drilling.
09/11/15	7.6	Before Drilling.

Depth (ft)	Strata (1)	CLASSIFICATION OF MATERIALS (Description)	Blows/6" (N Value)	Moisture Content %	Gravel %	Sand %	Fines %
		Asphalt Pavement, 0.0 ft - 0.66 ft					
		A-1-b, SiGrSa, brn, Moist, Rec. = 1.4 ft	5-5-5-4 (10)	9.9	30.3	45.6	24.1
5		Cleaned out casing, 4.3 ft - 5.0 ft					
		A-1-b, SaGr, brn, Moist, Rec. = 1.1 ft, Lab Note: Broken Rock was within sample.	9-35-11-6 (46)	12.6	47.4	40.9	11.7
10		Cleaned out casing, 8.9 ft - 10.0 ft					
		A-1-b, GrSa, gry, Moist, Rec. = 0.5 ft	6-4-5-6 (9)	22.5	40.0	55.8	4.2
15		Cleaned out casing, 14.3 ft - 15.0 ft					
		A-1-b, SiSaGr, gry, Moist, Rec. = 0.4 ft, Lab Note: Sample tested Non-Plastic.	3-3-3-3 (6)	16.8	40.0	35.2	24.8
20		A-1-b, Sa, gry, Moist, Rec. = 0.9 ft	3-2-3-3 (5)	21.8	3.3	87.2	9.5
25		Cleaned out casing, 24.3 ft - 25.0 ft					
		A-1-a, SaGr, gry, Moist, Rec. = 0.5 ft	5-2-4-5 (6)	11.2	59.5	30.6	9.9
30		Cleaned out casing, 29.6 ft - 30.0 ft					
		A-3, Sa, gry, Moist, Rec. = 0.2 ft	6-3-4-5 (7)	23.5	7.0	85.9	7.1
35		No Recovery, 35.0 ft - 37.0 ft, Changed to Mud Drilling due to light gray sand. 35-40 feet.	9-7-7-6 (14)				
40		A-4, Si, Lt/gry, Moist, Rec. = 1.3 ft	4-5-5-6 (10)	28.4		16.6	83.4
		Hole stopped @ 42.0 ft					
45		Remarks: Hole Collapsed at 7.8 feet.					

BOTTOM OF PILE CAP
ELEV. 309.00
ESTIMATED PILE
LENGTH OF 100 FT
BELOW PILE CAP

Notes:
1. Stratification lines represent approximate boundary between material types. Transition may be gradual.
2. N Values have not been corrected for hammer energy. C is the hammer energy correction factor.
3. Water level readings have been made at times and under conditions stated. Fluctuations may occur due to other factors than those present at the time measurements were made.

BORING LOG 2 RICHMOND BF0284(28).GPJ VERMONT AOT.GDT 11/12/15

PROJECT NAME: RICHMOND
PROJECT NUMBER: BF 0284(28)

FILE NAME: sl3c070boring.dgn
PROJECT LEADER: R. YOUNG
DESIGNED BY: S. COLEY
BORING LOGS 2

PLOT DATE: 16-JUN-2016
DRAWN BY: S. COLEY
CHECKED BY: ------
SHEET 22 OF 51

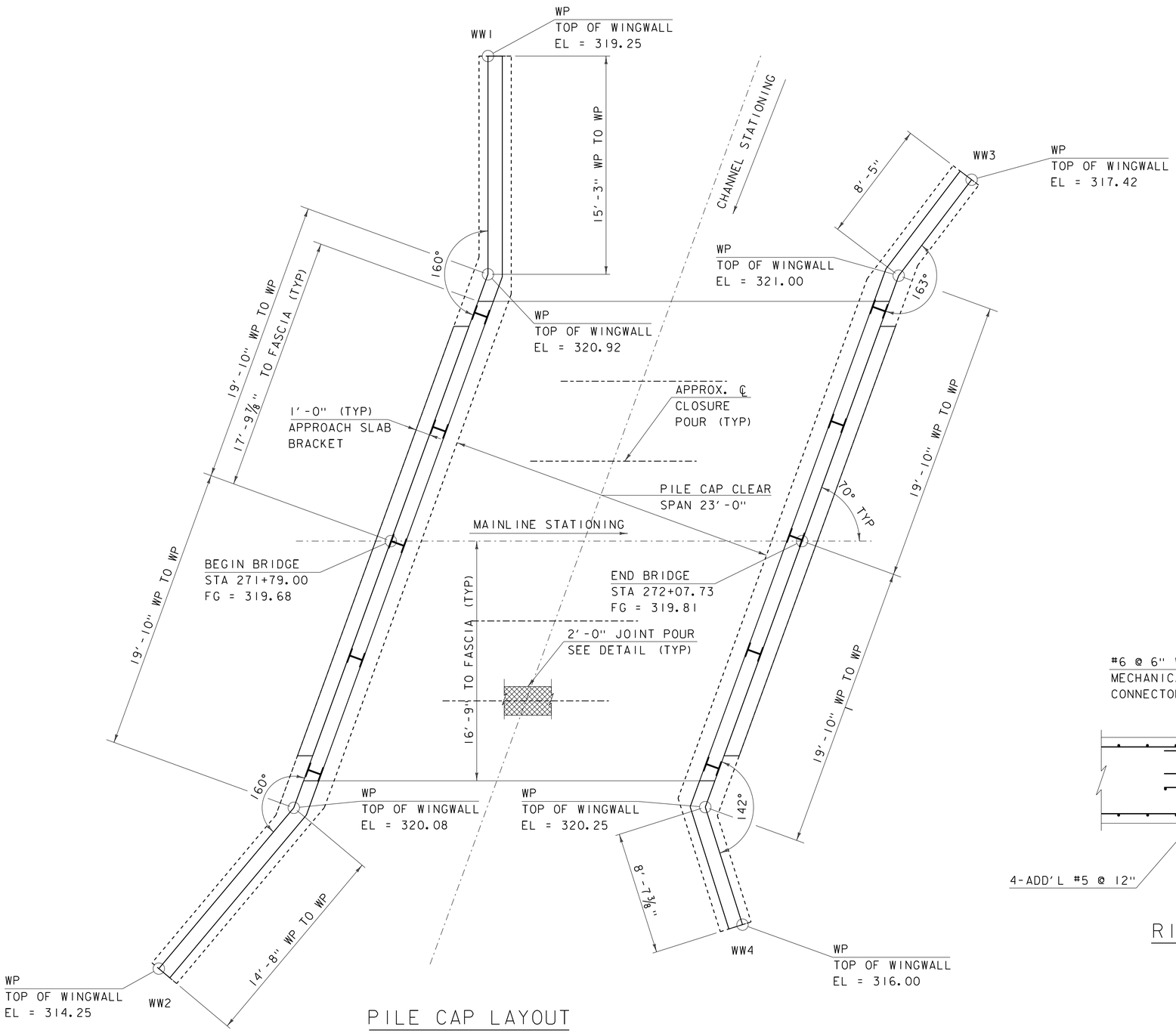

PILE CAP LAYOUT

SCALE ¼" = 1'-0"

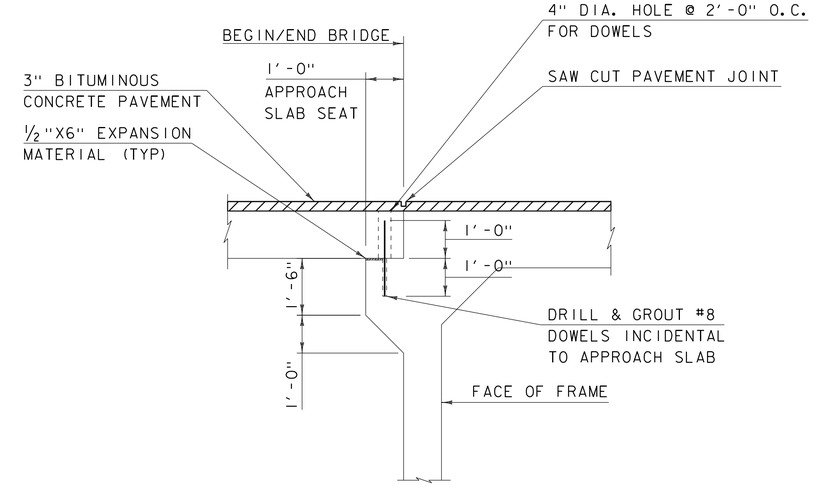

BRIDGE END DETAIL

SCALE ½" = 1'-0"

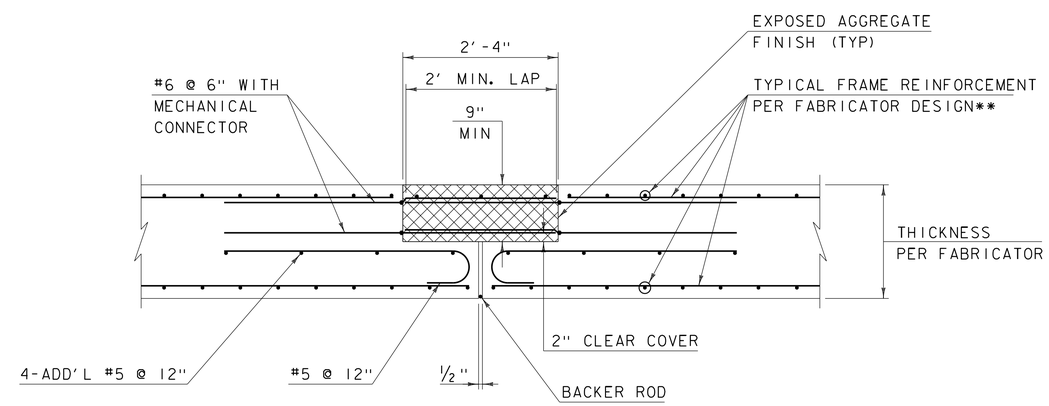

RIGID FRAME JOINT POUR DETAIL

SCALE 1" = 1'-0"

** DIMENSION SHOWN FOR ESTIMATING PURPOSES ONLY.
ACTUAL DIMENSIONS SHALL BE DESIGNED BY
FABRICATOR

PROJECT NAME: RICHMOND	
PROJECT NUMBER: BF 0284(28)	
FILE NAME: sl3c070sub.dgn	PLOT DATE: 16-JUN-2016
PROJECT LEADER: R. YOUNG	DRAWN BY: S. COLEY
DESIGNED BY: S. COLEY	CHECKED BY: ------
PILE CAP LAYOUT	SHEET 23 OF 51

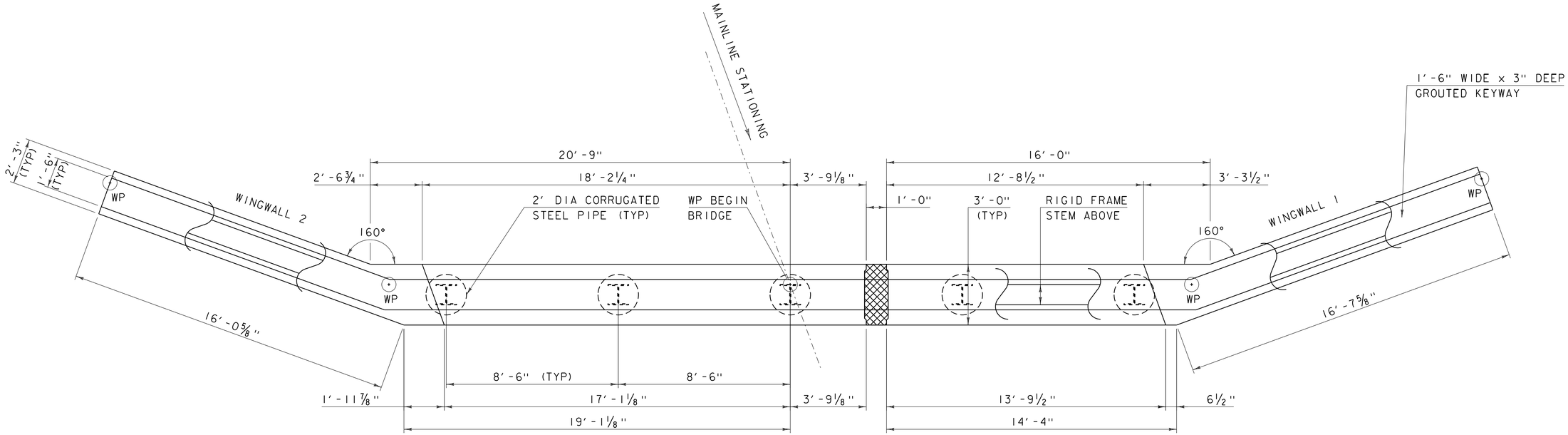

PILE CAP 1 PLAN

SCALE ⅜" = 1'-0"

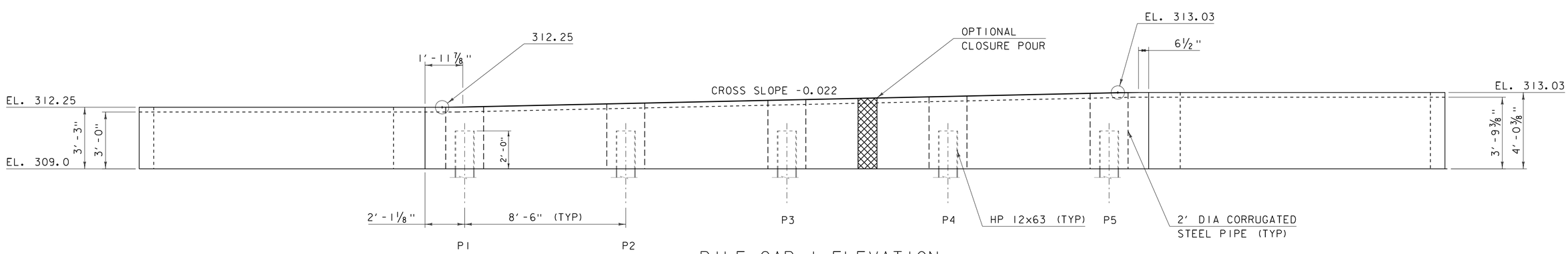

PILE CAP 1 ELEVATION

SCALE ⅜" = 1'-0"

NOTE:
1. EACH SECTION OF THE OPTIONAL CLOSURE POUR MUST INCLUDE AT LEAST TWO PILES.

PROJECT NAME: RICHMOND	
PROJECT NUMBER: BF 0284(28)	
FILE NAME: sl3c070sub.dgn	PLOT DATE: 16-JUN-2016
PROJECT LEADER: R. YOUNG	DRAWN BY: S. COLEY
DESIGNED BY: S. COLEY	CHECKED BY: ------
PILE CAP 1 PLAN	SHEET 24 OF 51

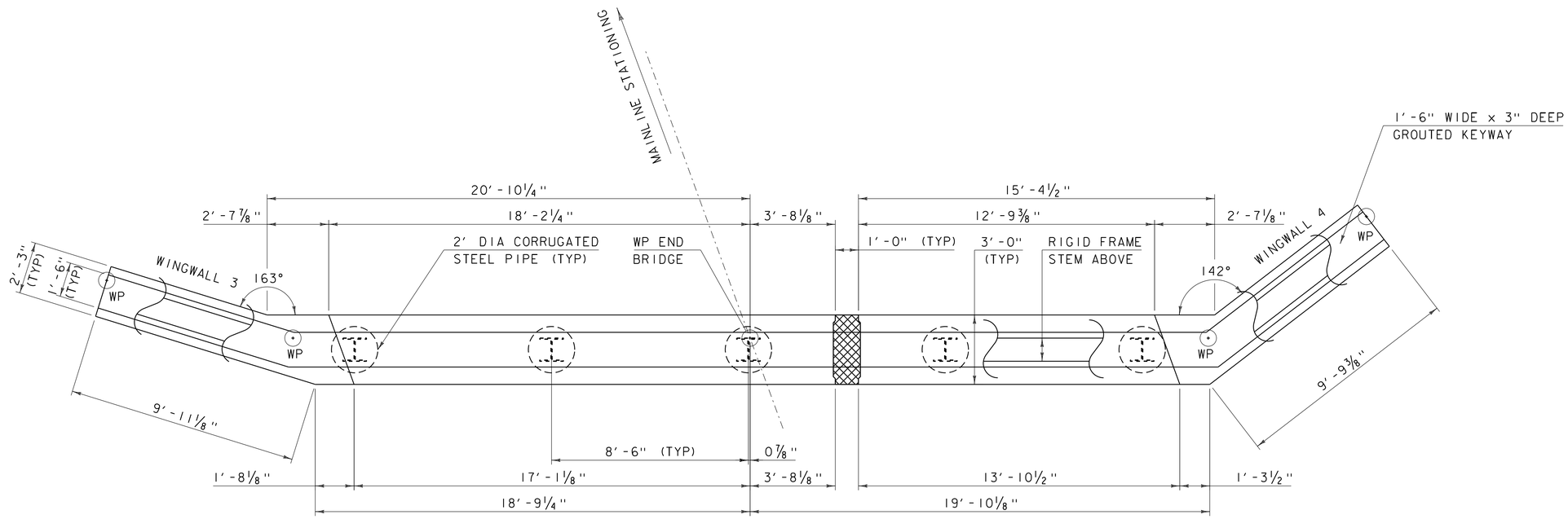

ABUTMENT 2 PLAN

SCALE ⅜" = 1'-0"

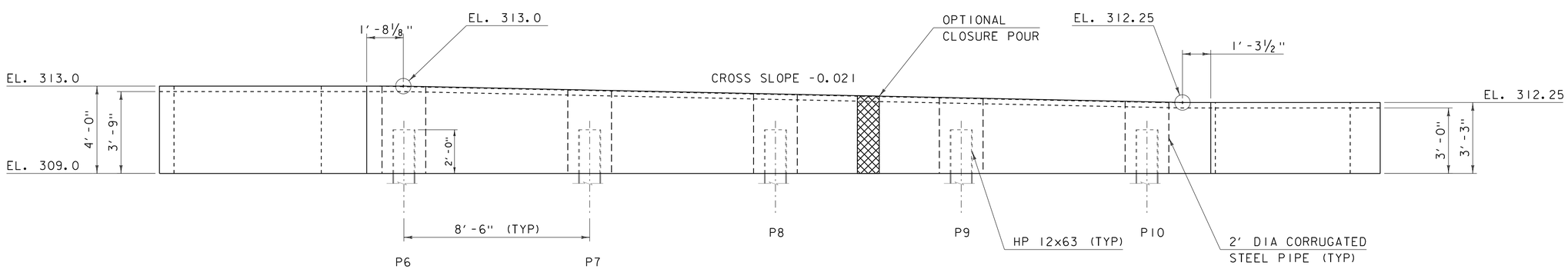

ABUTMENT 2 ELEVATION

SCALE ⅜" = 1'-0"

NOTE:
1. EACH SECTION OF THE OPTIONAL CLOSURE POUR MUST INCLUDE AT LEAST TWO PILES.

PROJECT NAME: RICHMOND	
PROJECT NUMBER: BF 0284(28)	
FILE NAME: sl3c070sub.dgn	PLOT DATE: 16-JUN-2016
PROJECT LEADER: R. YOUNG	DRAWN BY: S. COLEY
DESIGNED BY: S. COLEY	CHECKED BY: ------
PILE CAP 2 PLAN	SHEET 25 OF 51

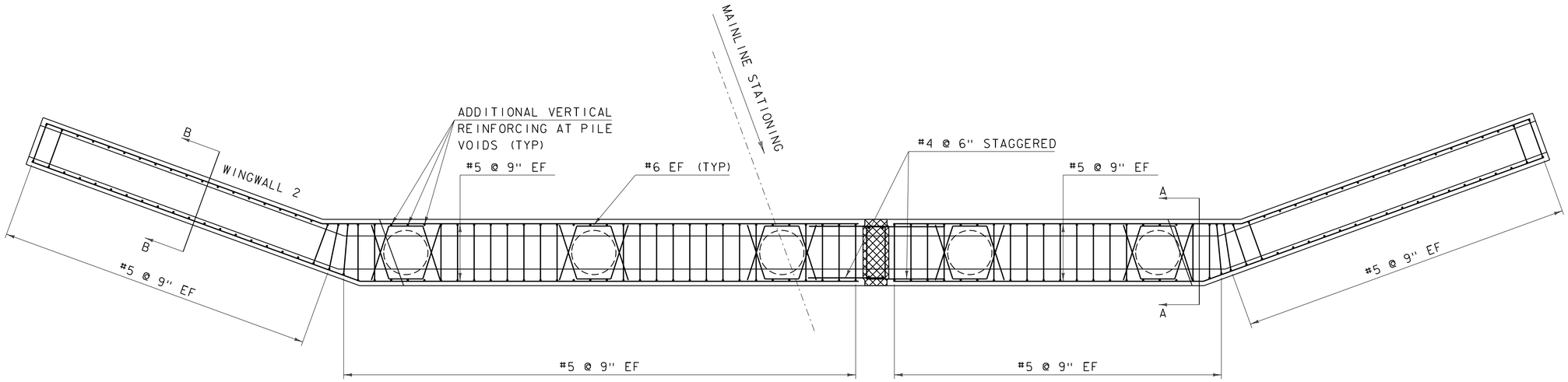

PILE CAP 1 PLAN

SCALE 3/8" = 1'-0"

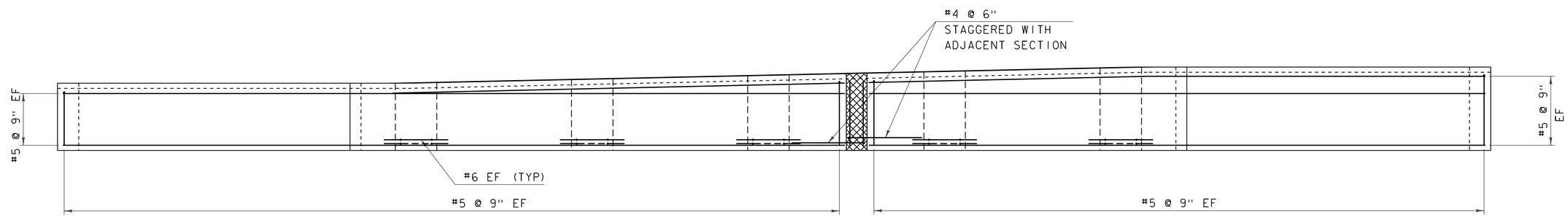

PILE CAP 1 ELEVATION

SCALE 3/8" = 1'-0"

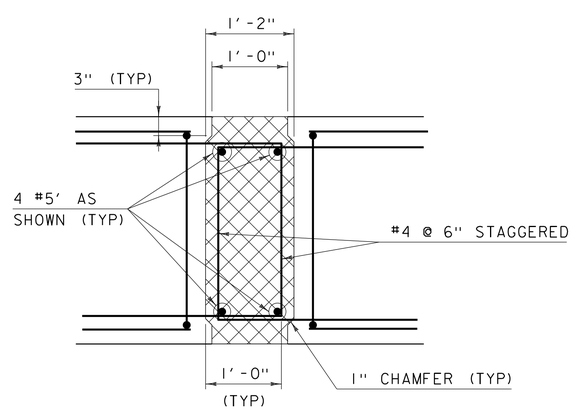

CLOSURE POUR DETAIL SECTION

SCALE 1" = 1'-0"

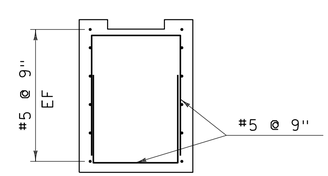

SECTION A-A

SCALE 1/2" = 1'-0"

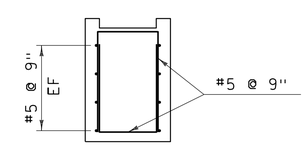

SECTION B-B

SCALE 1/2" = 1'-0"

NOTE:
NF = NEAR FACE
FF = FAR FACE
EF = EACH FACE
3" CLEAR UNLESS OTHERWISE SPECIFIED ON THE PLANS
2'-2" BAR LAP UNLESS OTHERWISE SPECIFIED ON THE PLANS

NOTES:
PILE CAP 1 SHOWN, PILE CAP 2 SIMILAR

PROJECT NAME: RICHMOND	
PROJECT NUMBER: BF 0284(28)	
FILE NAME: s13c070sub.dgn	PLOT DATE: 16-JUN-2016
PROJECT LEADER: R. YOUNG	DRAWN BY: S. COLEY
DESIGNED BY: S. COLEY	CHECKED BY: ------
PILE CAP REINFORCING PLAN	SHEET 26 OF 51

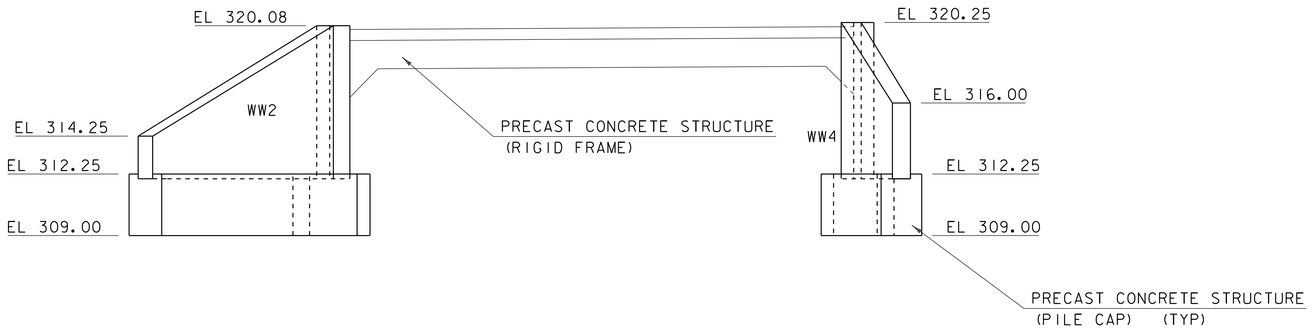

DOWNSTREAM ELEVATION
LOOKING UPSTREAM

SCALE 1/4" = 1'-0"

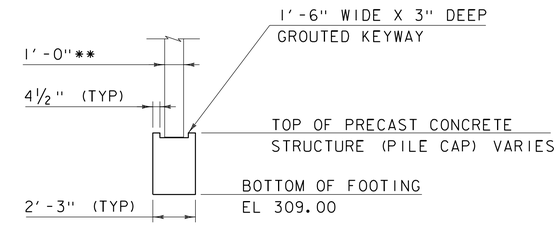

WINGWALL SECTION

SCALE 1/4" = 1'-0"

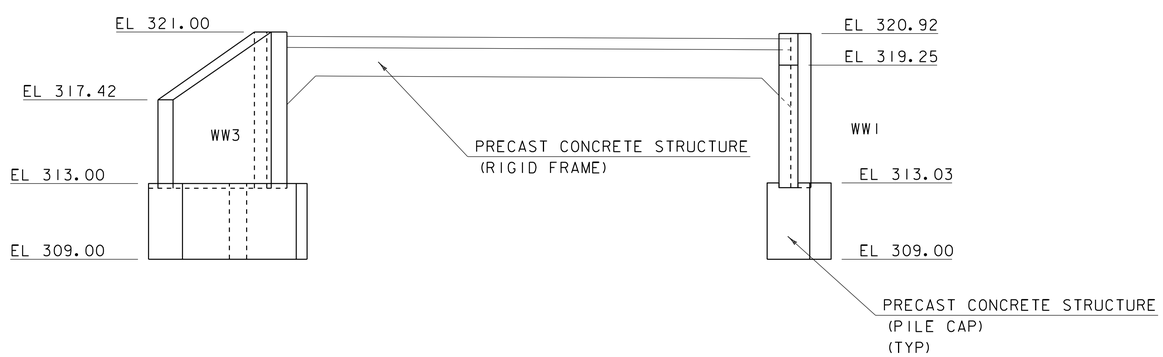

UPSTREAM ELEVATION
LOOKING DOWNSTREAM

SCALE 1/4" = 1'-0"

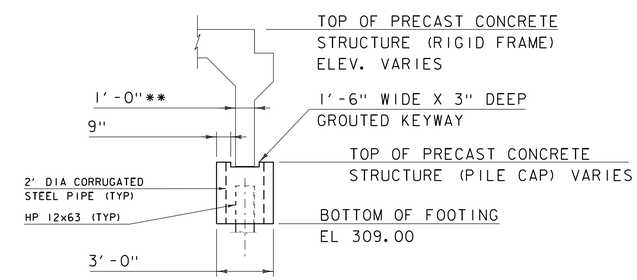

RIGID FRAME SECTION

SCALE 1/4" = 1'-0"

** DIMENSION SHOWN FOR ESTIMATING PURPOSES ONLY.
ACTUAL DIMENSIONS SHALL BE DESIGNED BY
FABRICATOR

PROJECT NAME: RICHMOND	
PROJECT NUMBER: BF 0284(28)	
FILE NAME: sl3c070sub.dgn	PLOT DATE: 16-JUN-2016
PROJECT LEADER: R. YOUNG	DRAWN BY: S. COLEY
DESIGNED BY: S. COLEY	CHECKED BY: ------
RIGID FRAME ELEVATION	SHEET 27 OF 51

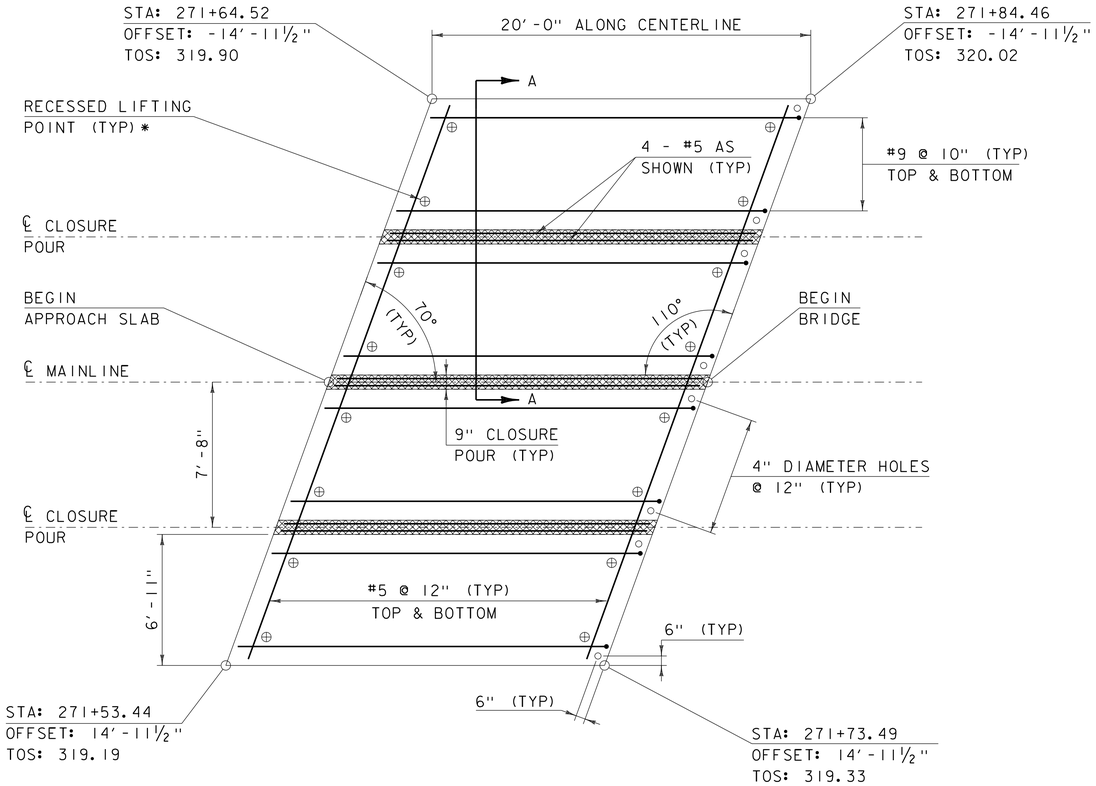

APPROACH SLAB #1 PLAN VIEW

SCALE ¼" = 1'-0"

*NOTES:

1. LIFTING POINTS SHALL BE DESIGNED BY FABRICATOR AND SUBMITTED WITH CALCULATIONS

2. REINFORCING STEEL FOR APPROACH SLAB #1 SHOWN, APPROACH SLAB #2 SIMILAR.

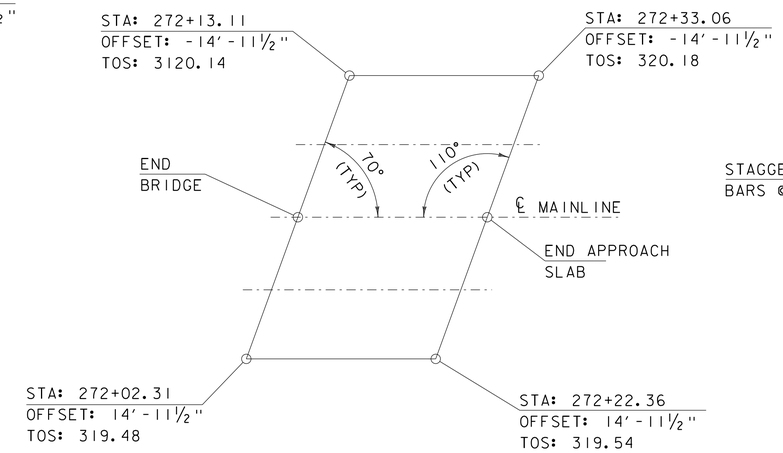

APPROACH SLAB #2 PLAN VIEW

NOT TO SCALE

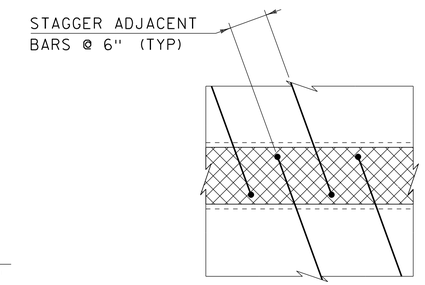

CONNECTION DETAIL PLAN

SCALE 1" = 1'-0"

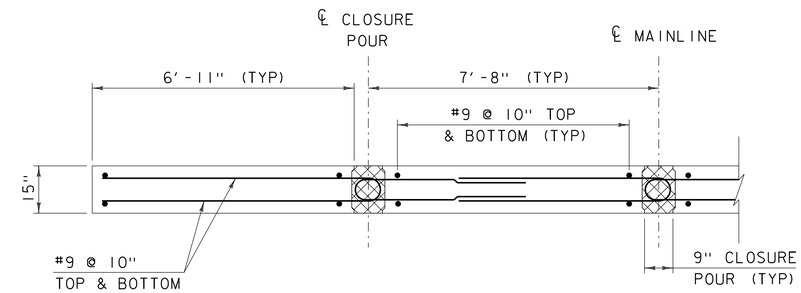

SECTION A-A

SCALE ½" = 1'-0"

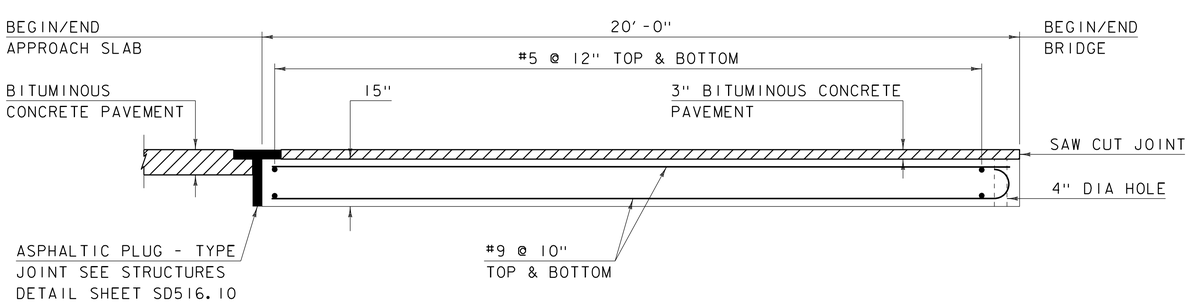

APPROACH SLAB ELEVATION VIEW

SCALE ½" = 1'-0"

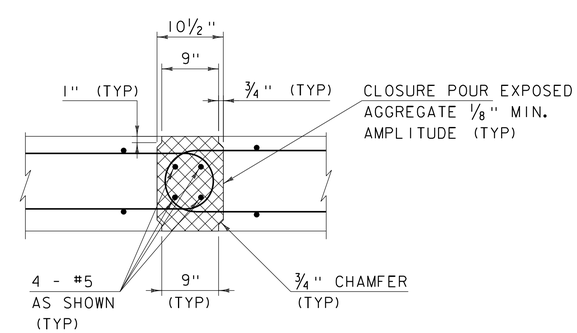

CONNECTION DETAIL SECTION

SCALE 1" = 1'-0"

*NOTES:
NF = NEAR FACE
FF = FAR FACE
EF = EACH FACE
3" CLEAR, UNLESS OTHERWISE SPECIFIED ON THE PLANS.
2'-7" BAR LAP UNLESS OTHERWISE SPECIFIED ON THE PLANS.

SPECIAL PROVISION (HIGH PERFORMANCE CONCRETE, RAPID SET)

PROJECT NAME: RICHMOND	
PROJECT NUMBER: BF 0284(28)	
FILE NAME: sl3c070approach.dgn	PLOT DATE: 16-JUN-2016
PROJECT LEADER: R. YOUNG	DRAWN BY: S. COLEY
DESIGNED BY: S. COLEY	CHECKED BY: W. LAMMER
APPROACH SLAB DETAILS	SHEET 28 OF 51

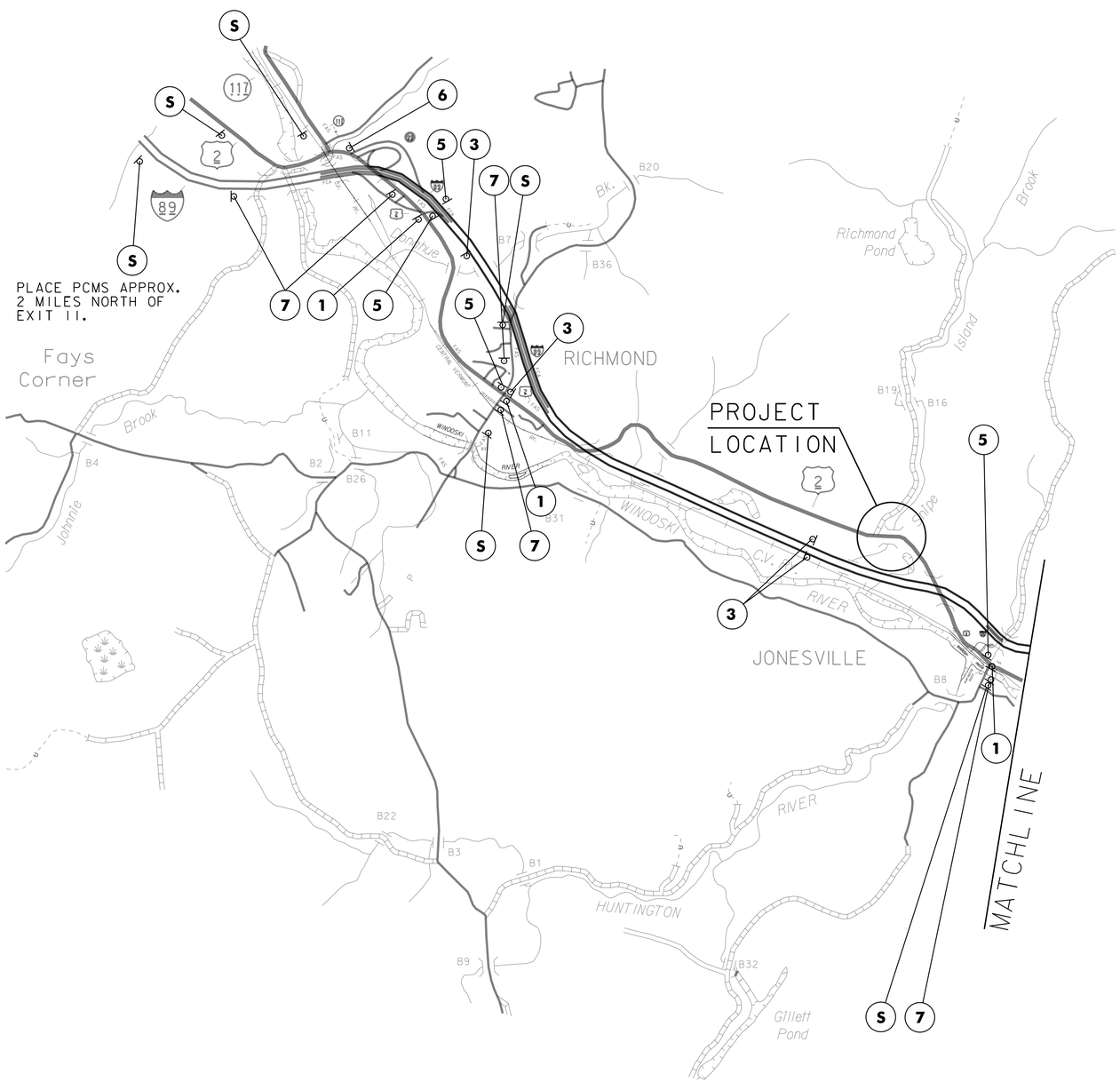

U	S		2				
C	L	O	S	E	D		

PORTABLE CHANGEABLE SIGN – PHASE 1

3		M	I	L	E	S	
E	A	S	T		O	F	
R	I	C	H	M	O	N	D

PORTABLE CHANGEABLE SIGN – PHASE 2

*	M	M	M	M		D	D	–
*	M	M	M	M		D	D	

PORTABLE CHANGEABLE SIGN – PHASE 3

(S) * M=MONTH D=DAY

NOTES:

1. THE PORTABLE CHANGEABLE MESSAGE SIGNS SHALL BE FULLY OPERATIONAL A MINIMUM OF TWO WEEKS PRIOR TO THE CLOSURE OF US 2.
2. DURING ACTUAL CLOSURE, ELIMINATE PHASE 3 ONLY.
3. DETOUR SIGNS SHALL BE LOCATED ADJACENT TO EXISTING INTERSECTION ROUTE MARKER ASSEMBLIES WHERE APPLICABLE.
4. CONFIRMATION ROUTE MARKERS (SIGN 3) SHALL BE INSTALLED IMMEDIATELY FOLLOWING EACH TURN AND AT ALL LOCATIONS ALONG DETOUR WHERE ROUTE MAKERS EXIST FOR THE PARENT ROUTE.
5. DETOUR SIGNING IS THE RESPONSIBILITY OF THE CONTRACTOR. PAYMENT FOR ALL TEMPORARY TRAFFIC CONTROL DEVICES FOR IMPLEMENTING THE DETOUR, INCLUDING BUT NOT LIMITED TO SIGNS, BARRICADES, AND MESSAGE BOARDS WILL BE INCLUDED IN THE UNIT PRICE BID FOR CONTRACT ITEM 900.645 SPECIAL PROVISION (TRAFFIC CONTROL, ALL -INCLUSIVE). THE REMOVAL OF VEGETATION INTERFERING WITH THE PLACEMENT OF TEMPORARY TRAFFIC CONTROL DEVICES WILL BE INCIDENTAL TO ITEM 900.645 SPECIAL PROVISION (TRAFFIC CONTROL, ALL-INCLUSIVE).
6. THIS DETOUR PLAN IS A CONCEPTUAL OUTLINE ONLY AND THE CONTRACTOR SHALL SUBMIT A DETAILED PLAN OF EACH INTERSECTION SHOWING DETOUR SIGN LOCATIONS IN RELATION TO EXISTING SIGNS.
7. OUTREACH WILL BE COORDINATED THROUGH THE PUBLIC INFORMATION OFFICER REGARDING ALTERNATIVE BICYCLE ROUTES.

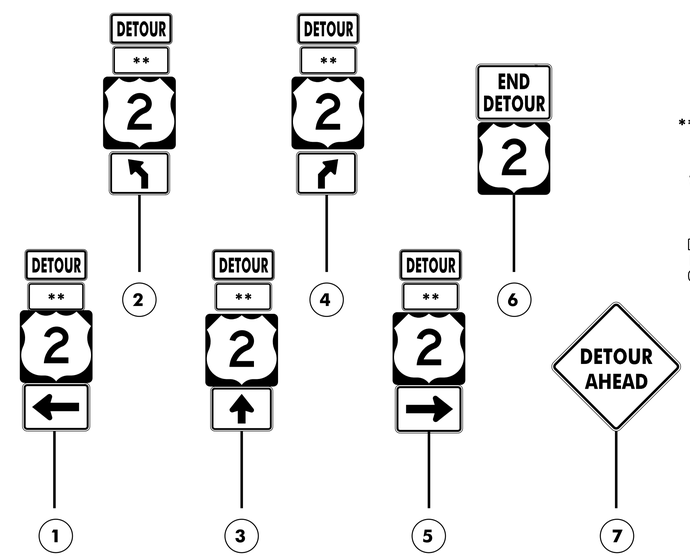

**E= EAST
OR
W= WEST

DETOUR SIGNS ON THE INTERSTATE SHALL BE GATE POSTED.

PROJECT DEVELOPMENT NOTE: AS OF MAY 2016, TWO PROJECTS WILL BE IN THE AREA OF THE DETOUR FOR THIS PROJECT. ROUTE: WATERBURY-STOWE VT 100 RECLAIM, AND ESSEX-RICHMOND VT 117 RECLAIM. CHECK TO AVOID DETOUR SIGNING CONFLICTS WITH THESE TWO PROJECTS.

BICYCLES NEED TO BE PREVENTED FROM USING THE INTERSTATE DETOUR - WHAT IS AN EFFECTIVE WAY TO CONVEY THIS IN THE CONTRACT PLANS AND ENFORCE IT DURING CLOSURE?

DETOUR PLAN 1

NOT TO SCALE

PROJECT NAME: RICHMOND	
PROJECT NUMBER: BF 0284(28)	
FILE NAME: sl3c070detour.dgn	PLOT DATE: 16-JUN-2016
PROJECT LEADER: R. YOUNG	DRAWN BY: W. LAMMER
DESIGNED BY: W. LAMMER	CHECKED BY: ___
DETOUR PLAN 1	SHEET 29 OF 51

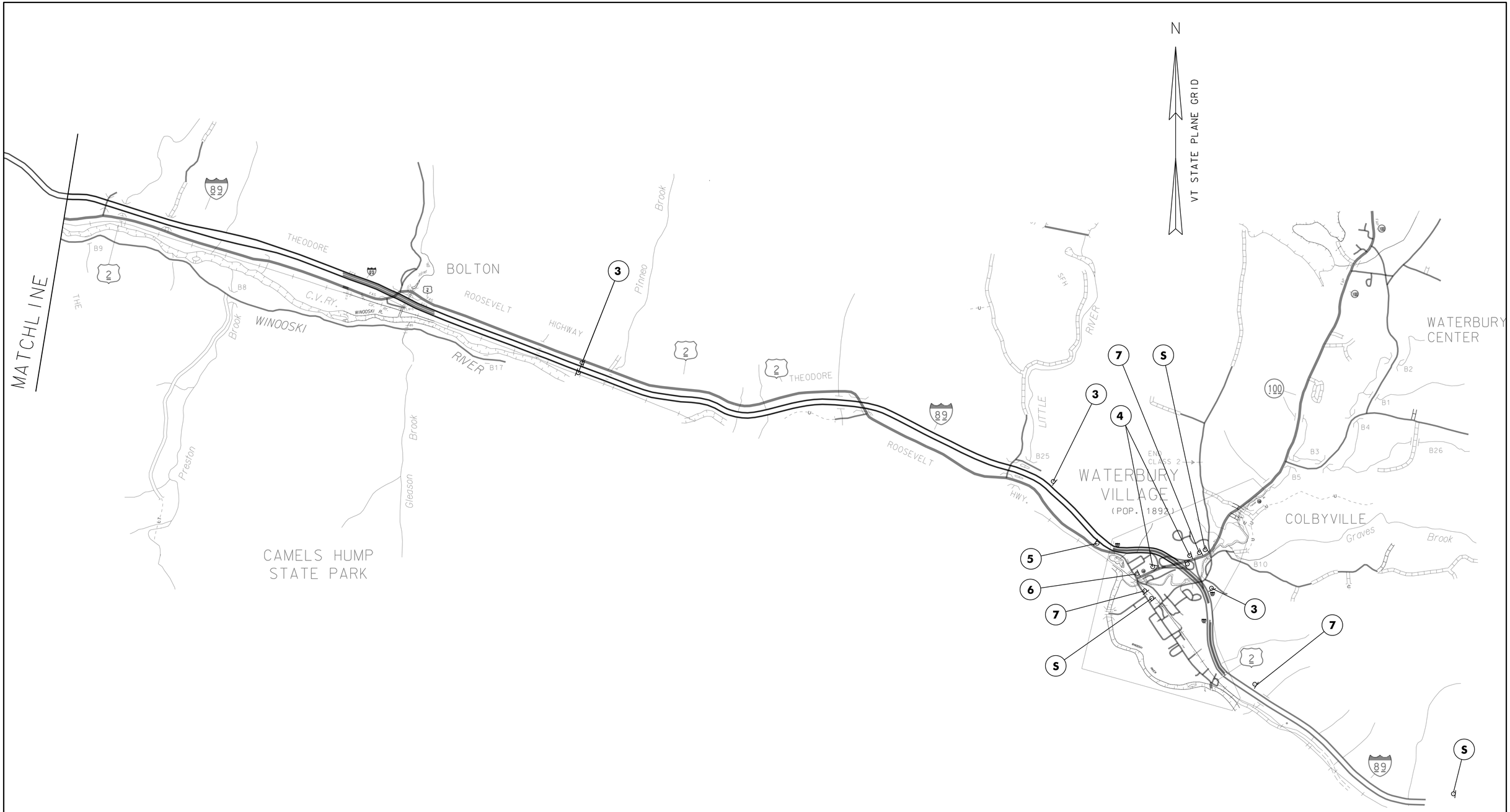

PLACE PCMS APPROX.
2 MILES SOUTH OF
EXIT 10.

DETOUR PLAN 2

NOT TO SCALE

PROJECT NAME: RICHMOND	
PROJECT NUMBER: BF0284(28)	
FILE NAME: sl3c070detour.dgn	PLOT DATE: 16-JUN-2016
PROJECT LEADER: R. YOUNG	DRAWN BY: W. LAMMER
DESIGNED BY: W. LAMMER	CHECKED BY: ___
DETOUR PLAN 2	SHEET 30 OF 51

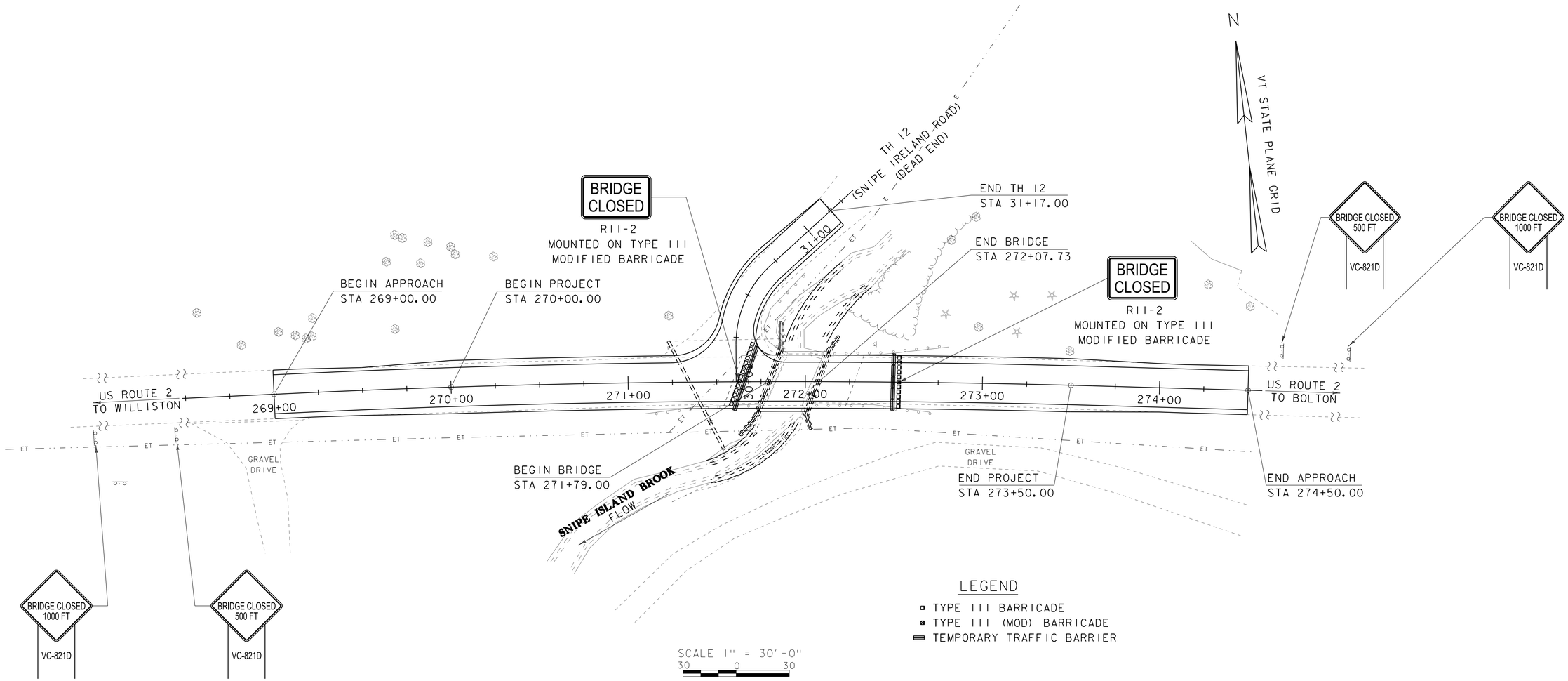

1. THE OFFICIAL STATE DETOUR SIGNING PLAN FOR THE ROAD CLOSURE IS SHOWN ON DETOUR PLAN 1 & 2.
2. NO LOCAL DETOUR ROUTE WILL BE SIGNED OR OFFICIALLY RECOGNIZED FOR THIS PROJECT.
3. A PUBLIC OUTREACH COORDINATOR SHALL BE USED FOR PUBLICIZING AND COORDINATING DETOUR INFORMATION, INCLUDING (BUT NOT LIMITED TO) TRAFFIC DELAYS FOR THE PUBLIC AND ALTERNATIVE ROUTES FOR BICYCLES. THE CONTRACTOR SHALL COORDINATE WITH THE PUBLIC INFORMATION OFFICER AS NEEDED.
4. THE CONTRACTOR SHALL BE RESPONSIBLE FOR DESIGNING, ERECTING AND MAINTAINING (AS WELL AS REMOVING AND RESETTING) ALL DETOUR AND ON-PROJECT TEMPORARY TRAFFIC CONTROL ZONE DEVICES, INCLUDING (BUT NOT LIMITED TO) CONSTRUCTION SIGNS, BARRICADES, TEMPORARY TRAFFIC BARRIERS, PORTABLE CHANGEABLE MESSAGE SIGNS (PCMS) AND OTHER REQUIRED DEVICES (AS ORDERED BY THE ENGINEER) USED TO REGULATE, WARN AND GUIDE TRAFFIC DURING CONSTRUCTION. TRAFFIC CONTROL DEVICES SHALL MEET THE REQUIREMENTS OF THE LATEST EDITION OF THE MANUAL ON UNIFORM TRAFFIC CONTROL DEVICES (MUTCD) AND PERTINENT E-SERIES AND T-SERIES STANDARDS. WHERE CONFLICTS EXIST, THE MUTCD SHALL GOVERN. EXACT LOCATIONS OF DEVICES SHALL BE COORDINATED WITH THE RESIDENT ENGINEER. ADDITIONAL PROJECT CONSTRUCTION SIGNS SHALL BE INSTALLED AS REQUIRED BY THE RESIDENT ENGINEER. THE COST OF ALL DETOUR AND ON-PROJECT TEMPORARY TRAFFIC CONTROL ZONE DEVICES (WITH THE EXCEPTION OF TEMPORARY TRAFFIC BARRIERS AND PCMS) SHALL BE PAID FOR UNDER ITEM 900.645, SPECIAL PROVISION (TRAFFIC ONTROL, ALL INCLUSIVE).
5. PORTABLE CHANGEABLE MESSAGE SIGNS (PCMS) SHALL BE PLACED AT THE APPROXIMATE LOCATIONS SHOWN ON THE PLANS OR WHERE DESIGNATED BY THE ENGINEER. PCMS SHALL BE PLACED OFF THE EDGE OF THE ROAD, OUTSIDE THE CLEAR ZONE, BUT SHALL BE VISIBLE FROM THE ROADWAY.
6. TRAFFIC WILL BE ALLOWED TO BE REDUCED TO ONE LANE FOR A MAXIMUM OF 14 DAYS PRIOR TO THE BRIDGE CLOSURE PERIOD. THE CONTRACTOR IS REQUIRED TO INFORM THE PUBLIC OUTREACH COORDINATOR PRIOR TO REDUCING TRAFFIC TO ONE LANE. ALL SIGNS, SIGNALS, BARRIERS, ETC. REQUIRED TO MAINTAIN ONE LANE OF TRAFFIC IS TO BE INCLUDED UNDER ITEM 900.645, SPECIAL PROVISION (TRAFFIC CONTROL, ALL INCLUSIVE).
7. THE US ROUTE MARKERS USED FOR THE DETOUR AS SHOWN ON THE PLANS SHALL FOLLOW MUTCD REQUIREMENTS. THESE SIGNS SHALL BE REMOVED AT THE END OF THE ROAD CLOSURE. THESE SIGNS AND THEIR REMOVAL SHALL BE PAID FOR UNDER ITEM 900.645, SPECIAL PROVISION (TRAFFIC CONTROL, ALL INCLUSIVE).
8. ALL TRAFFIC CONTROL DEVICES SHALL BE KEPT IN THEIR PROPER POSITION AT ALL TIMES AND SHALL BE REPAIRED, REPLACED OR CLEANED AS NECESSARY TO PRESERVE THEIR APPEARENCE AND CONTINUITY. THIS WORK SHALL BE PAID UNDER ITEM 900.645, SPECIAL PROVISION (TRAFFIC CONTROL, ALL INCLUSIVE).
9. ALL SIGNS SHALL BE PLACED WITHIN EXISTING STATE OR TOWN RIGHTS-OF-WAY, UNLESS OTHERWISE NOTED.
10. ACCESS TO ALL EXISTING DRIVES AND SIDE ROADS SHALL BE MAINTAINED AT ALL TIMES DURING ALL PHASES OF CONSTRUCTION
11. INSTALLATION OF DETOUR AND ONSITE SIGNS SHALL NOT BLOCK ANY EXISTING TRAFFIC CONTROL SIGN ASSEMBLIES AND SHALL MODIFY OR BE PLACED ADJACENT TO EXISTING ROUTE MARKER SIGN ASSEMBLIES WHEN POSSIBLE. THE CONTRACTOR SHOULD MAINTAIN AT LEAST 200 FEET BETWEEN SIGN ASSEMBLIES WHENEVER POSSIBLE.
12. EXISTING SIGNS THAT ARE IN CONFLICT WITH THE TRAFFIC FLOW OF THE DETOUR SHALL BE REMOVED OR COVERED BY THE CONTRACTOR, AS DIRECTED BY THE ENGINEER. ALL SIGNS REMOVED OR COVERED SHALL BE REPLACED OR UNCOVERED WHEN THE TRAFFIC CONTROL PACKAGE IS DISASSEMBLED. PAYMENT FOR THIS WORK WILL BE INCLUDED IN ITEM 900.645, SPECIAL PROVISION (TRAFFIC CONTROL, ALL INCLUSIVE).
13. NO CONSTRUCTION SIGNS SHALL BE INSTALLED AS TO INTERFERE WITH STOPPING SIGHT DISTANCE AND CORNER SIGHT DISTANCE FROM DRIVES AND TOWN HIGHWAYS.
14. AFTER THE IDENTIFIED WORK TO OPEN THE NEW BRIDGE TO TWO-WAY TRAFFIC IS COMPLETED, TEMPORARY TRAFFIC BARRIERS MAY BE INCORPORATED TO CONSTRUCT THE BRIDGE CURB AND BRIDGE RAILING, SEE SPECIAL PROVISIONS. ALL COSTS SHALL BE INCLUDED IN ITEM 900.645, SPECIAL PROVISION (TRAFFIC CONTROL, ALL INCLUSIVE).

PROJECT NAME: RICHMOND	
PROJECT NUMBER: BF 0284(28)	
FILE NAME: s13c070tcp.dgn	PLOT DATE: 16-JUN-2016
PROJECT LEADER: R. YOUNG	DRAWN BY: S. COLEY
DESIGNED BY: S. COLEY	CHECKED BY: W. LAMMER
TRAFFIC CONTROL SHEET	SHEET 31 OF 51

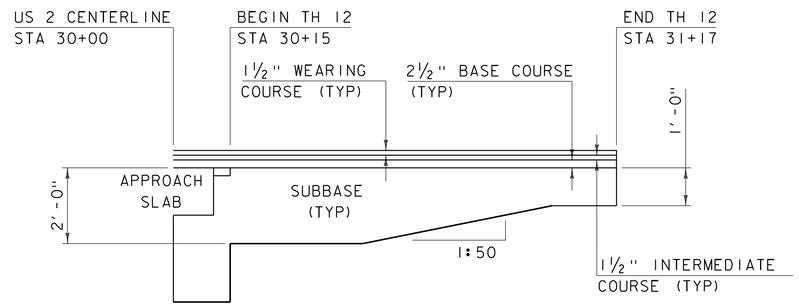

TH 12 MATERIAL TRANSITION DETAIL

HORIZONTAL SCALE: 1" = 20'-0"
VERTICAL SCALE: 1" = 2'-0"

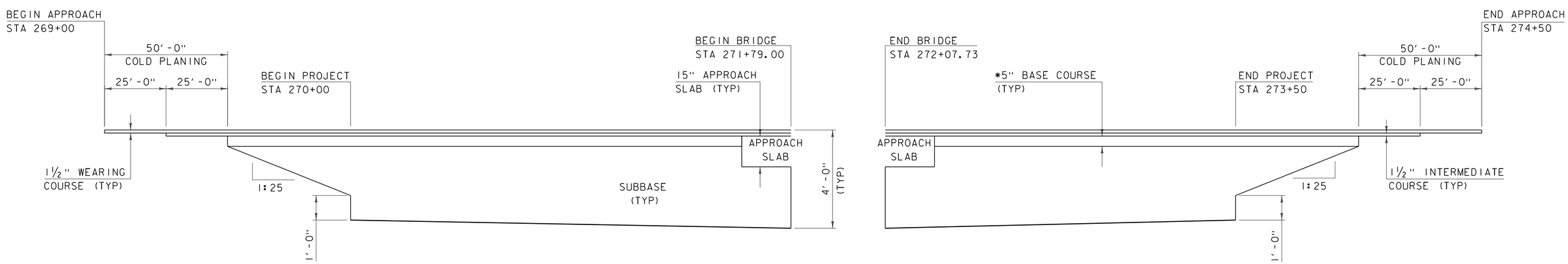

US 2 MATERIAL TRANSITION DETAIL

HORIZONTAL SCALE: 1" = 20'-0"
VERTICAL SCALE: 1" = 2'-0"

NOTE:
* TWO 2.5 INCH LIFTS OF TYPE IIS BASE

PROJECT NAME: RICHMOND	
PROJECT NUMBER: BF 0284 (28)	
FILE NAME: s13c070transition	PLOT DATE: 16-JUN-2016
PROJECT LEADER: R. YOUNG	DRAWN BY: S. COLEY
DESIGNED BY: S. COLEY	CHECKED BY: ------
MATERIAL TRANSITION DETAIL	SHEET 32 OF 51

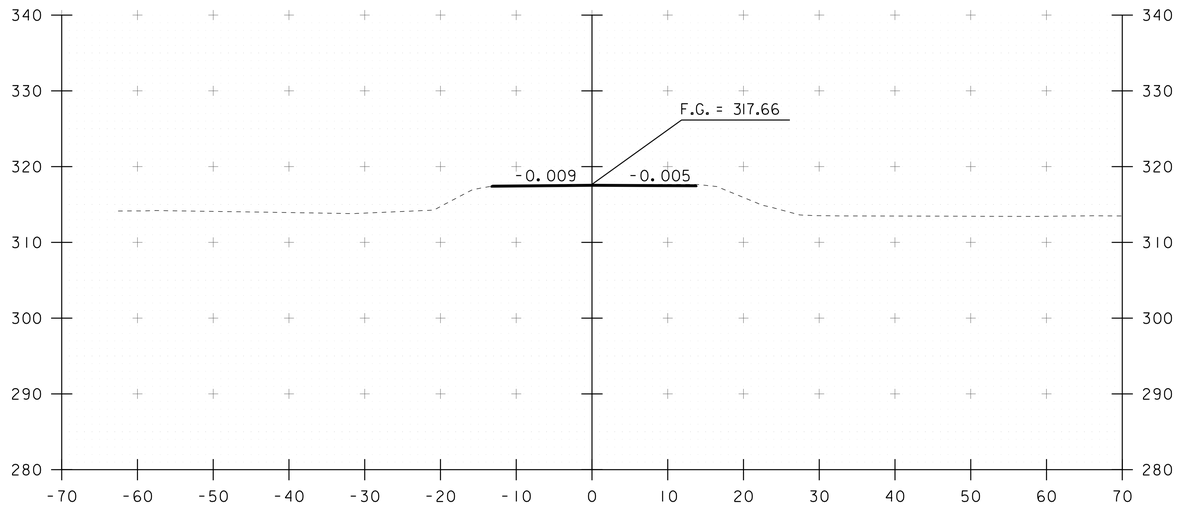

269+25

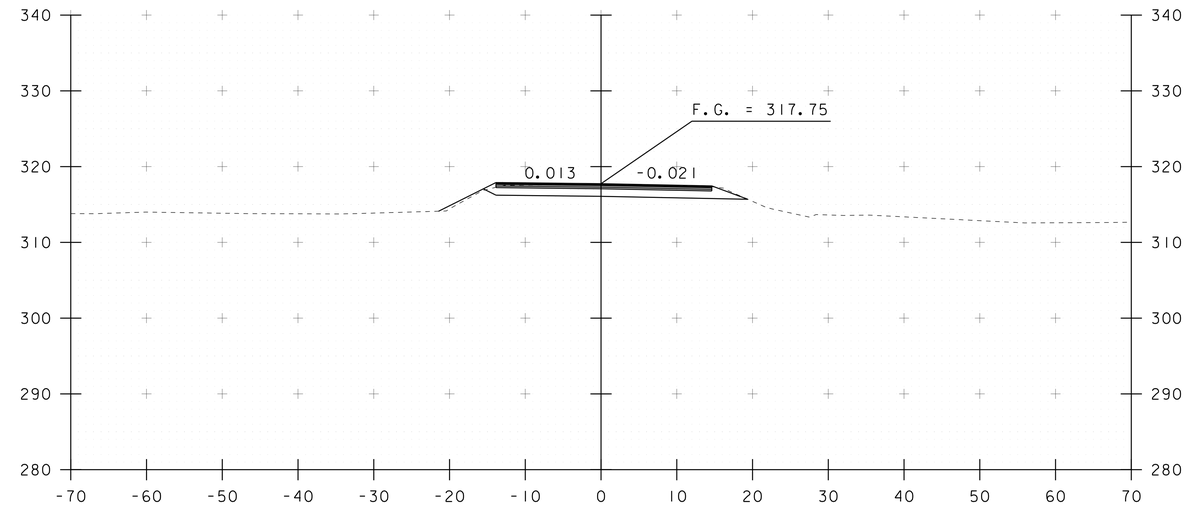

269+75

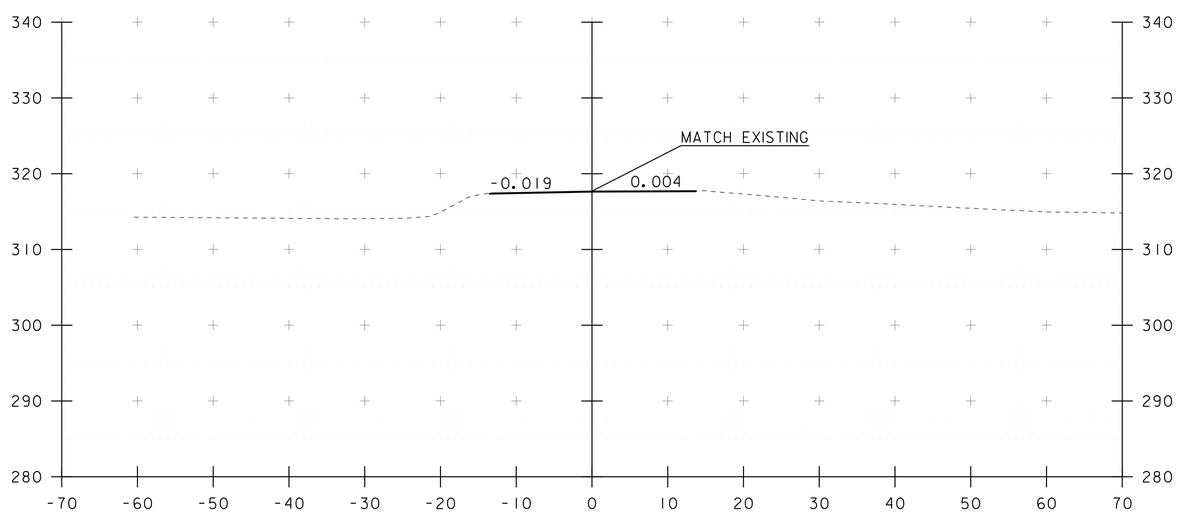

269+00
BEGIN APPROACH

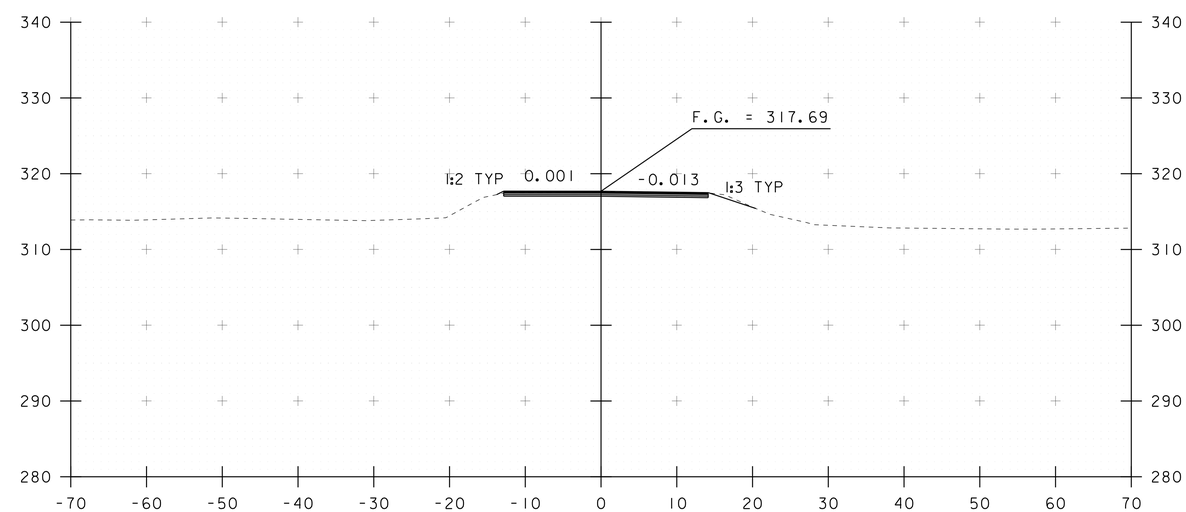

269+50

STA. 10+50 TO STA. 11+25

PROJECT NAME: RICHMOND	
PROJECT NUMBER: BF 0284(28)	
FILE NAME: s13c070xs.dgn	PLOT DATE: 16-JUN-2016
PROJECT LEADER: R. YOUNG	DRAWN BY: S. COLEY
DESIGNED BY: S. COLEY	CHECKED BY: W. LAMMER
ROADWAY CROSS SECTIONS 1	SHEET 33 OF 51

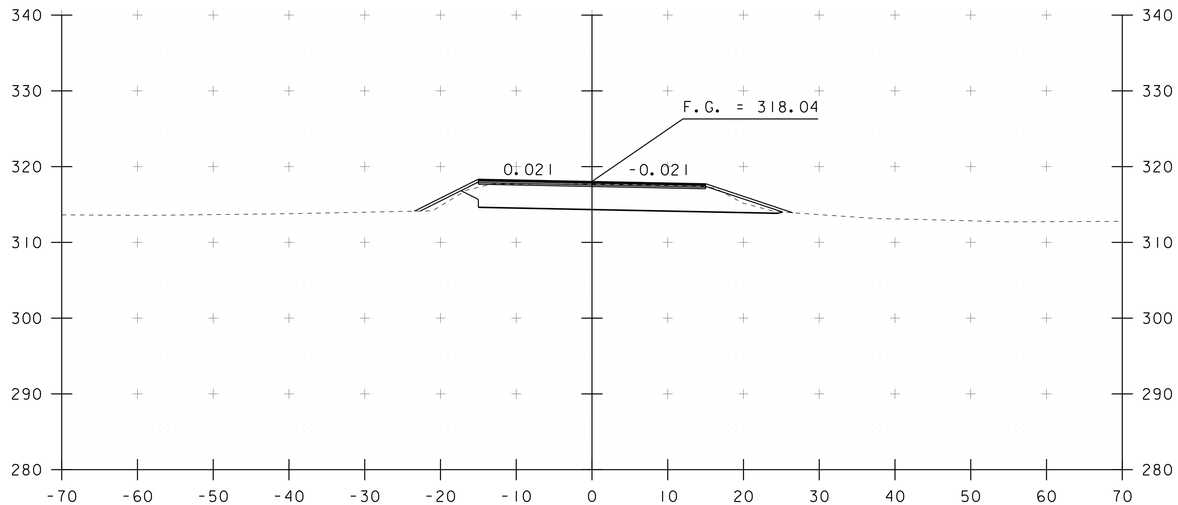

270+25

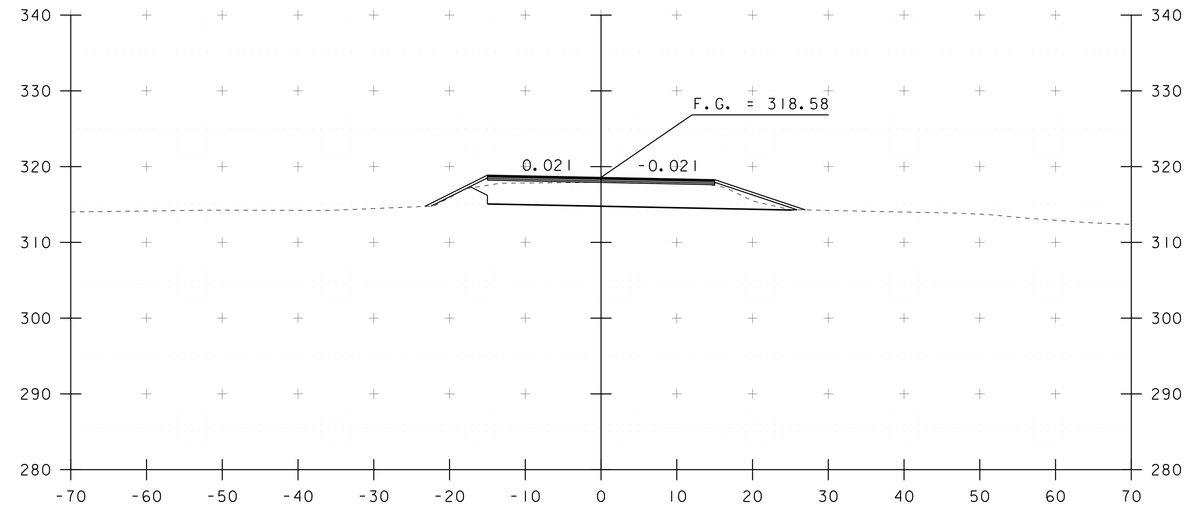

270+75

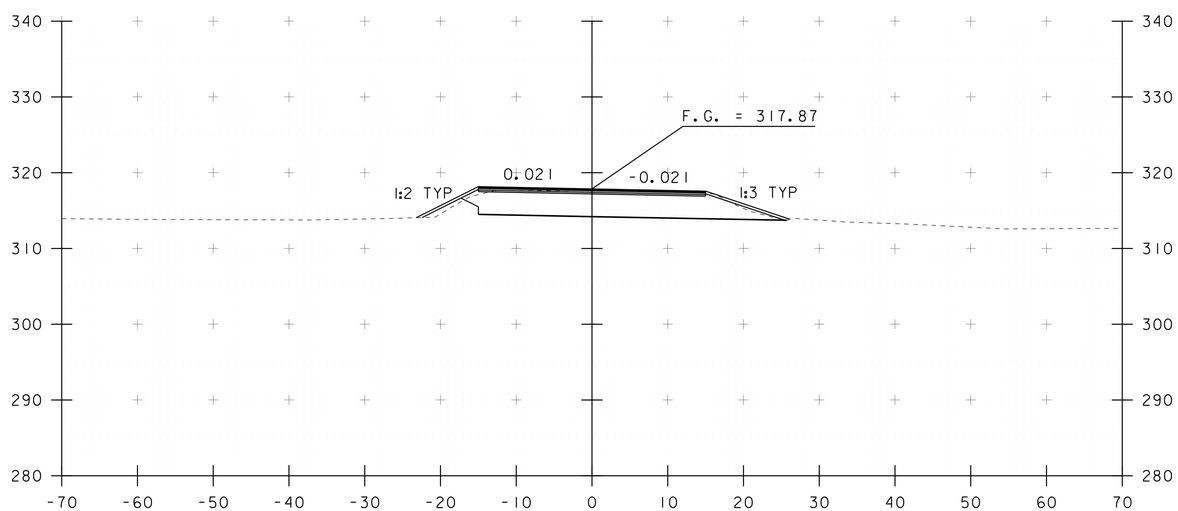

270+00
BEGIN PROJECT

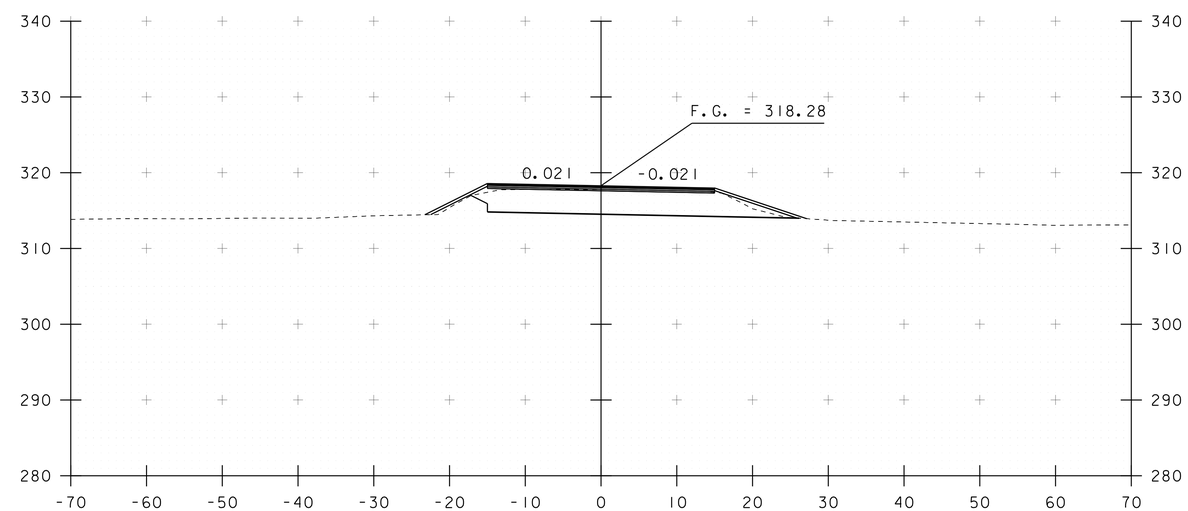

270+50

STA. 11+50 TO STA. 12+25

PROJECT NAME: RICHMOND	
PROJECT NUMBER: BF 0284(28)	
FILE NAME: s13c070xs.dgn	PLOT DATE: 16-JUN-2016
PROJECT LEADER: R. YOUNG	DRAWN BY: S. COLEY
DESIGNED BY: S. COLEY	CHECKED BY: W. LAMMER
ROADWAY CROSS SECTIONS 2	SHEET 34 OF 51

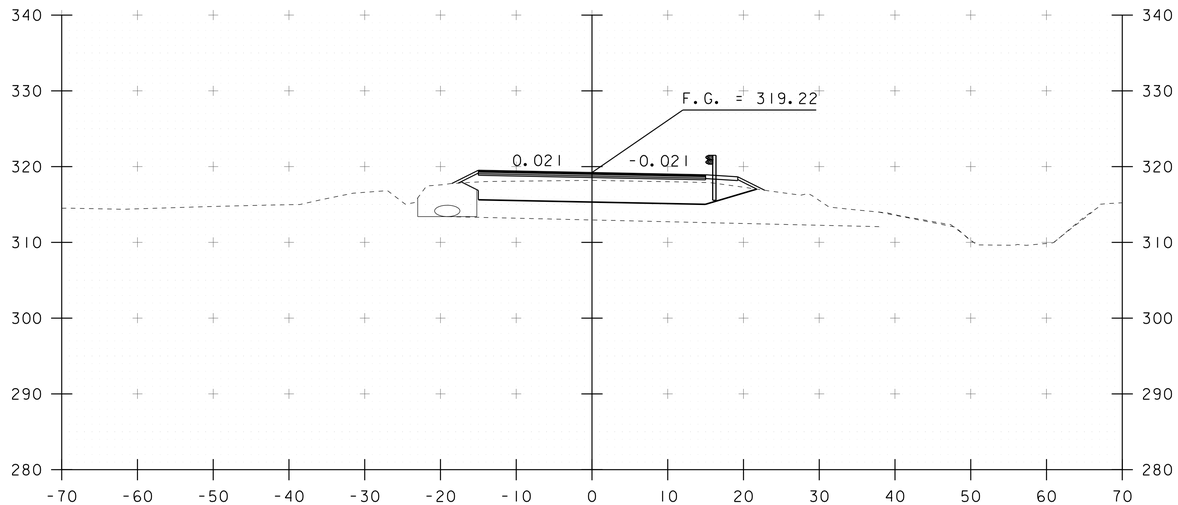

271+25

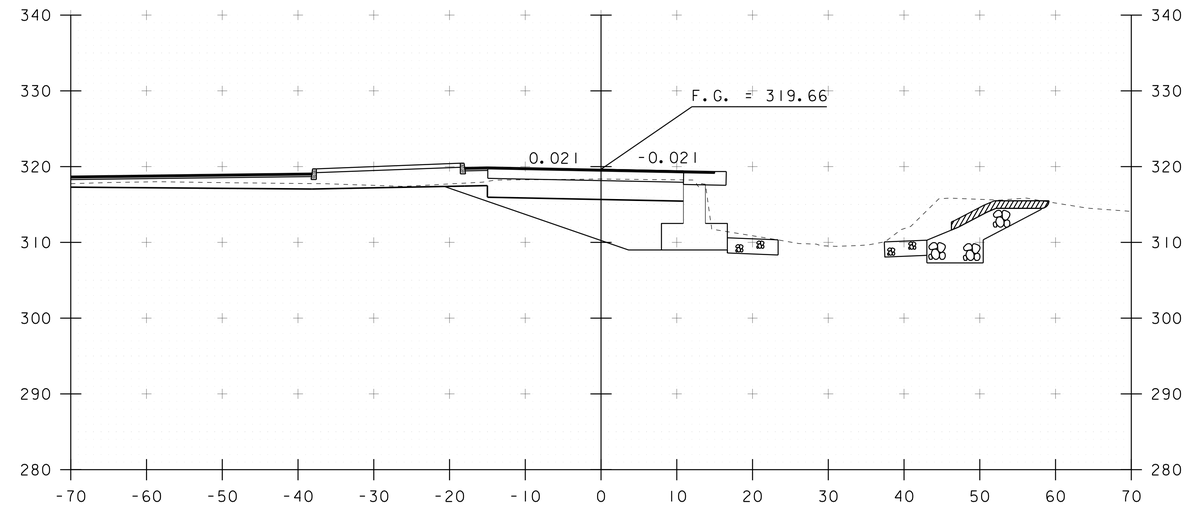

271+75
STA 271+79.00
BEGIN BRIDGE

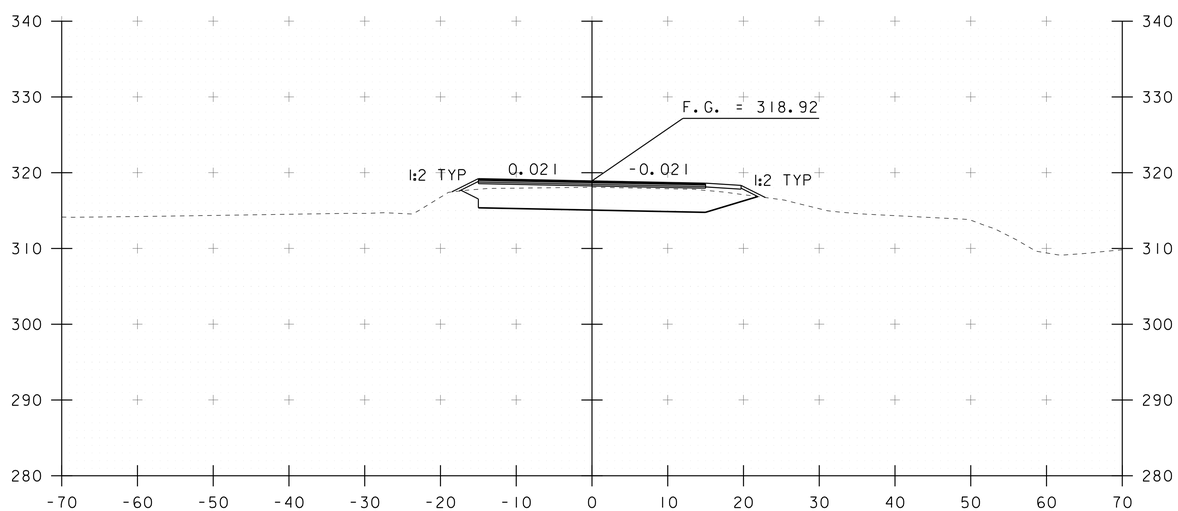

271+00

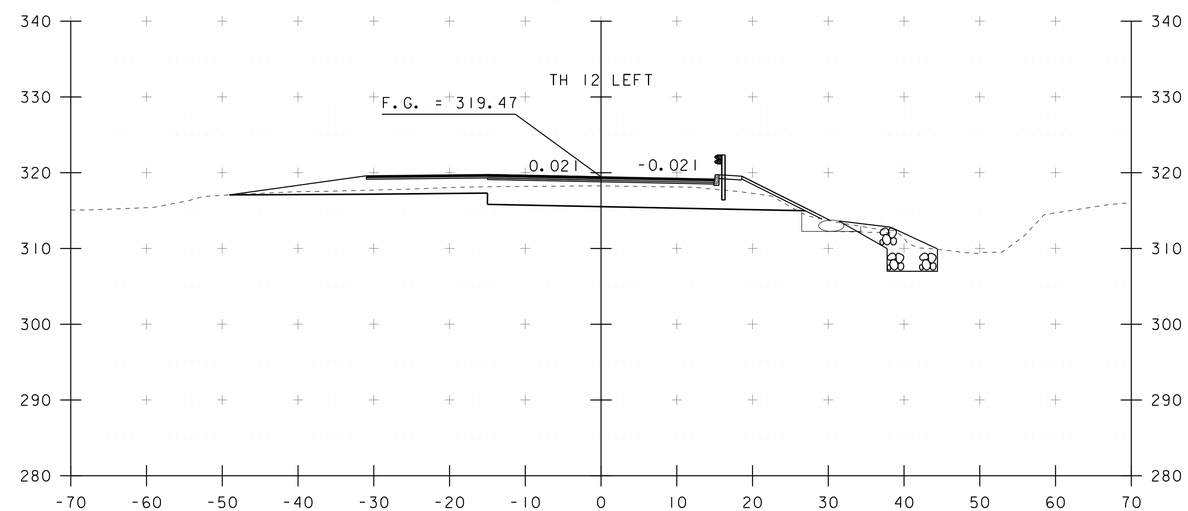

271+50

STA. 12+50 TO STA. 13+25

PROJECT NAME: RICHMOND	
PROJECT NUMBER: BF 0284(28)	
FILE NAME: s13c070xs.dgn	PLOT DATE: 16-JUN-2016
PROJECT LEADER: R. YOUNG	DRAWN BY: S. COLEY
DESIGNED BY: S. COLEY	CHECKED BY: W. LAMMER
ROADWAY CROSS SECTIONS 3	SHEET 35 OF 51

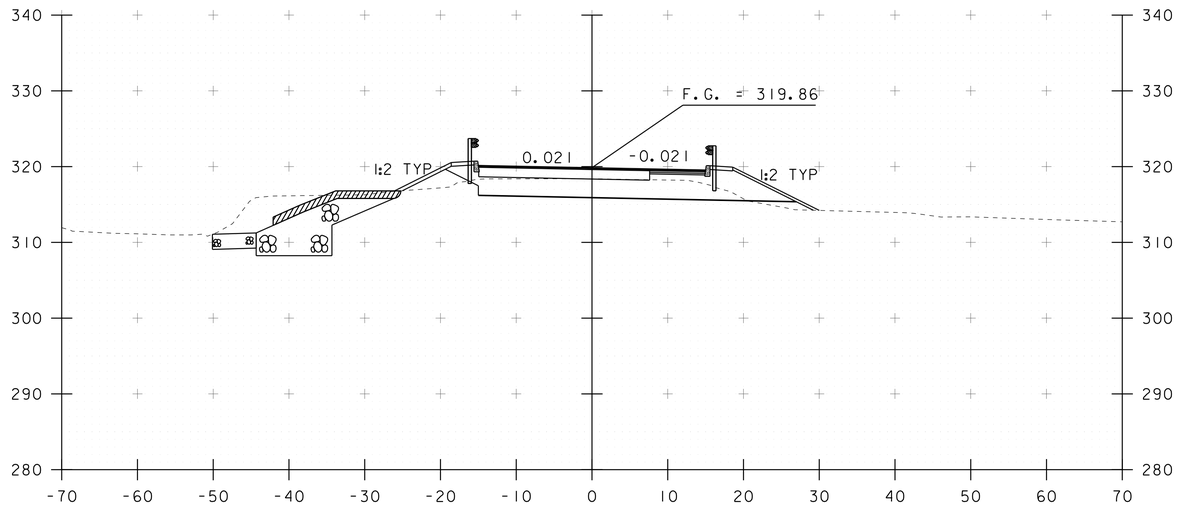

272+25

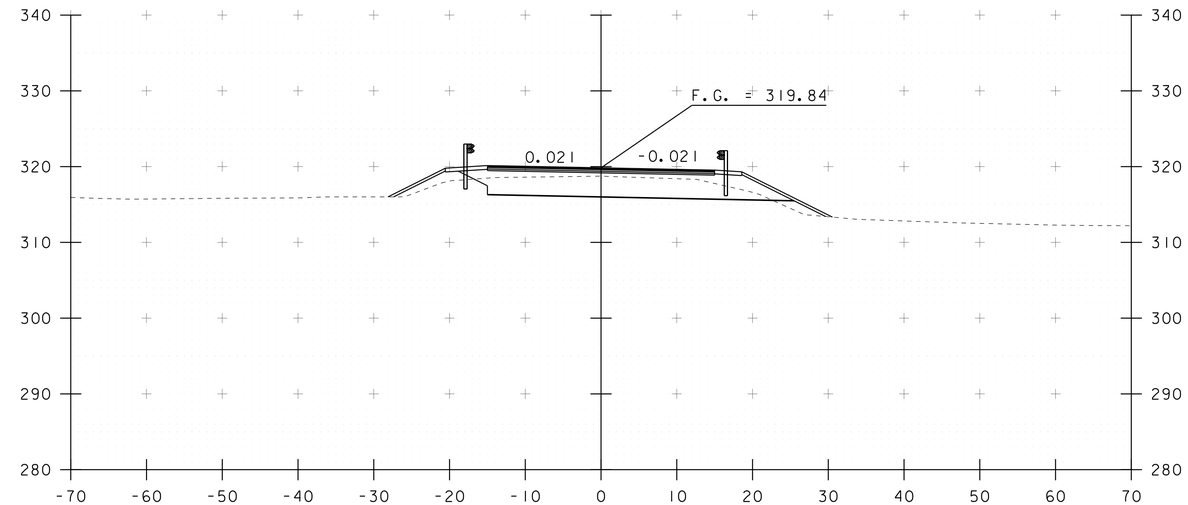

272+75

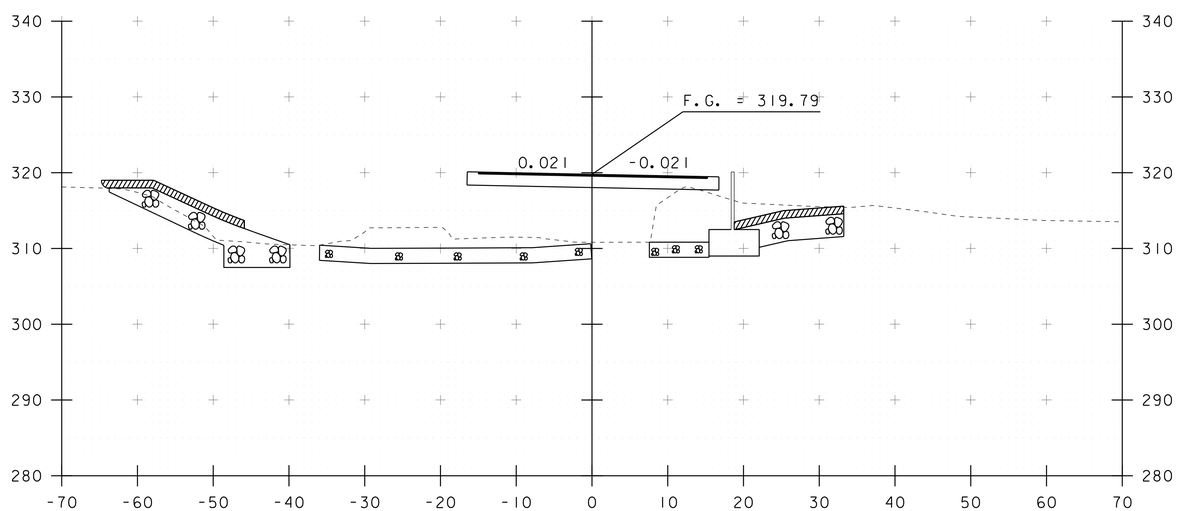

272+00

STA 272+07.73
END BRIDGE

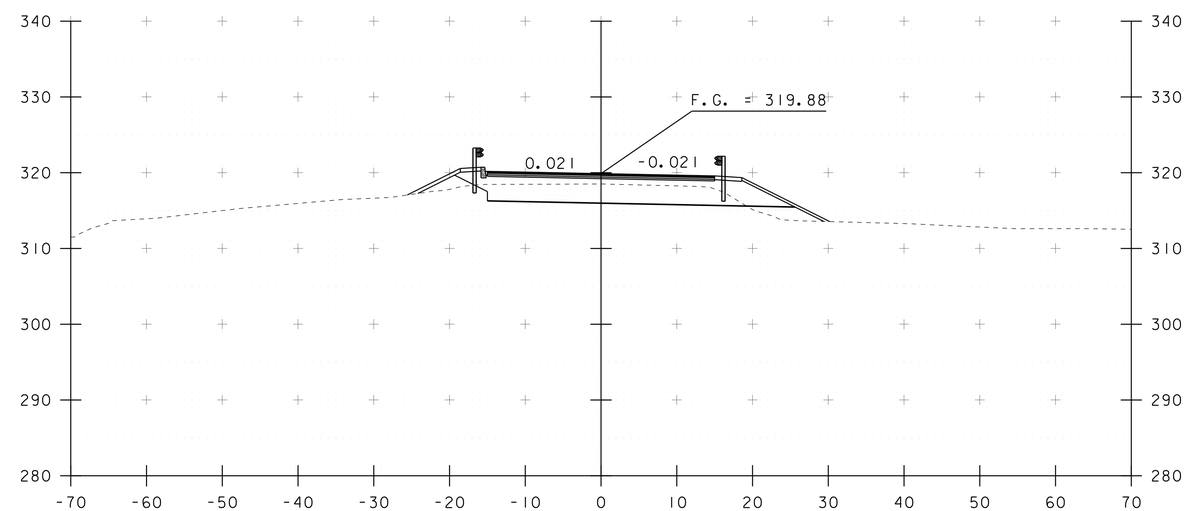

272+50

STA. 13+50 TO STA. 14+25

PROJECT NAME: RICHMOND	
PROJECT NUMBER: BF 0284(28)	
FILE NAME: s13c070xs.dgn	PLOT DATE: 16-JUN-2016
PROJECT LEADER: R.YOUNG	DRAWN BY: S. COLEY
DESIGNED BY: S. COLEY	CHECKED BY: W. LAMMER
ROADWAY CROSS SECTIONS 4	SHEET 36 OF 51

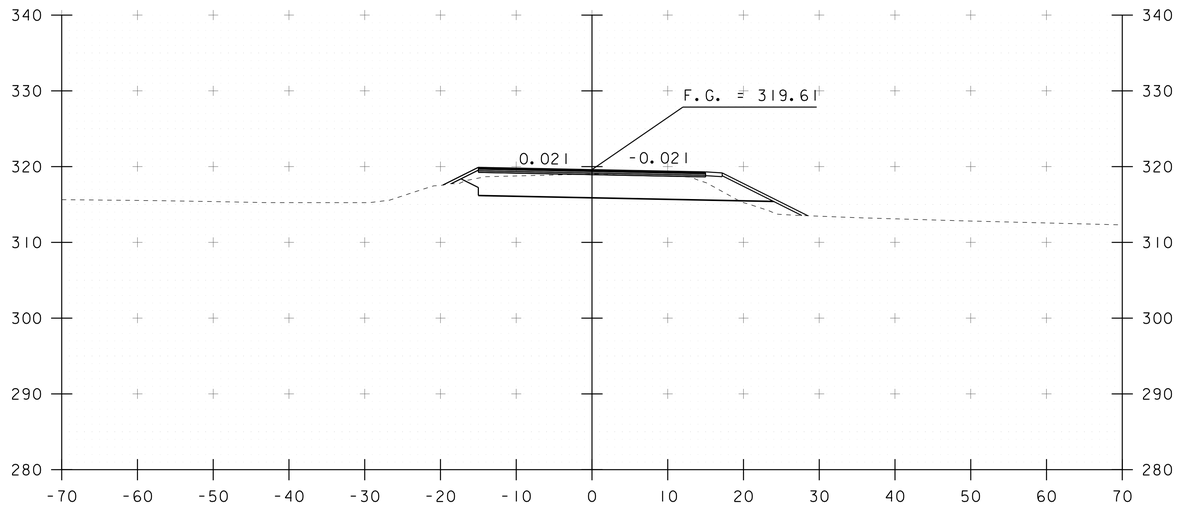

273+25

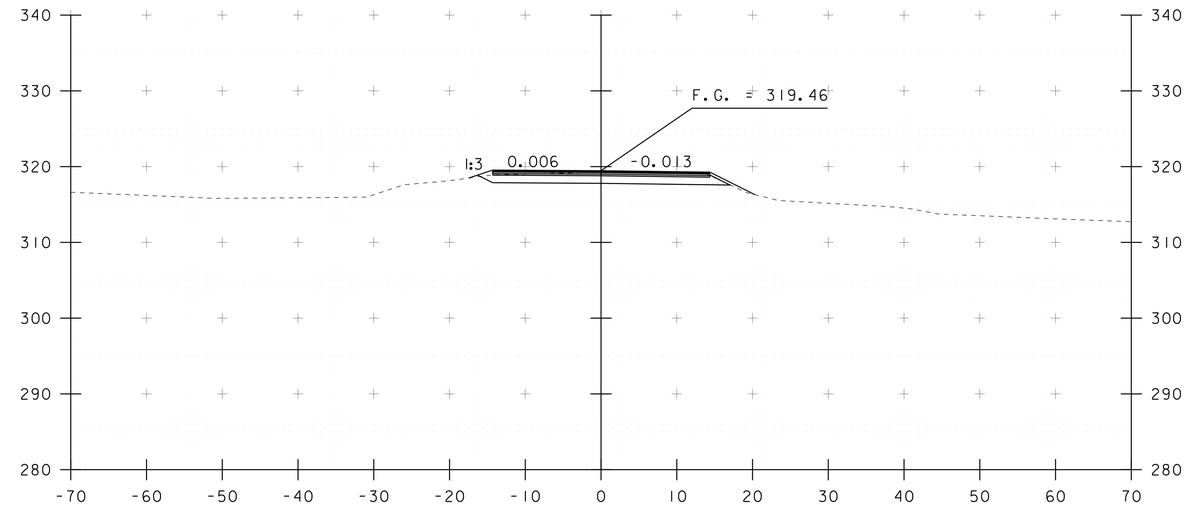

273+75

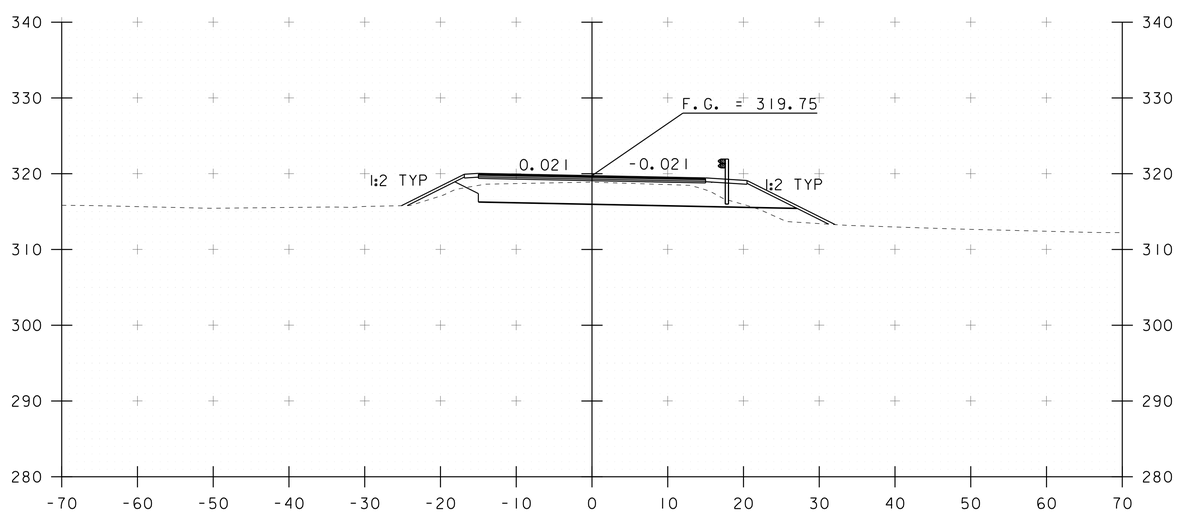

273+00

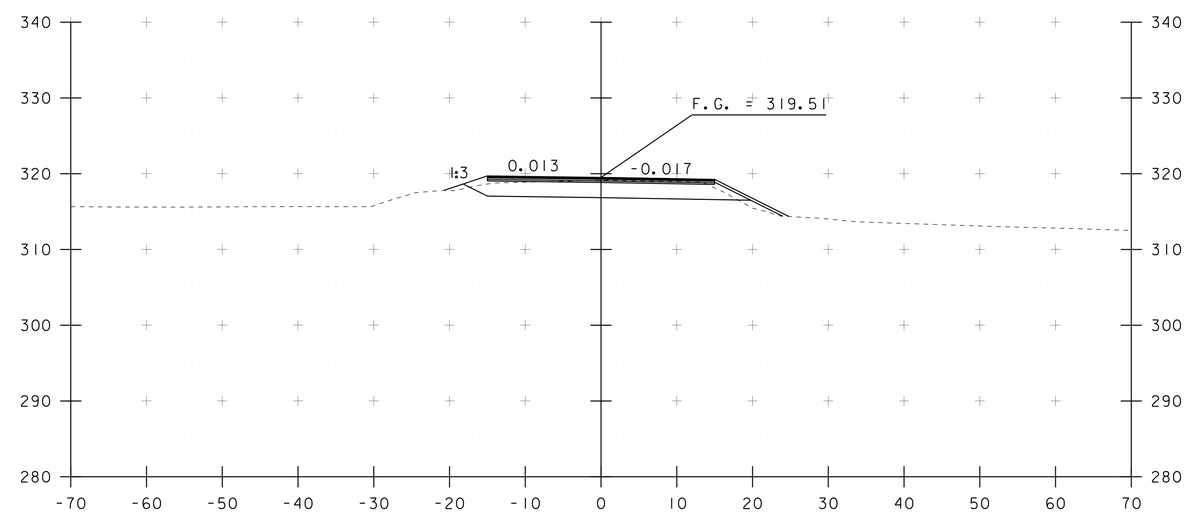

273+50

END PROJECT

STA. 14+50 TO STA. 15+25

PROJECT NAME: RICHMOND	
PROJECT NUMBER: BF 0284(28)	
FILE NAME: s13c070xs.dgn	PLOT DATE: 16-JUN-2016
PROJECT LEADER: R. YOUNG	DRAWN BY: S. COLEY
DESIGNED BY: S. COLEY	CHECKED BY: W. LAMMER
ROADWAY CROSS SECTIONS 5	SHEET 37 OF 51

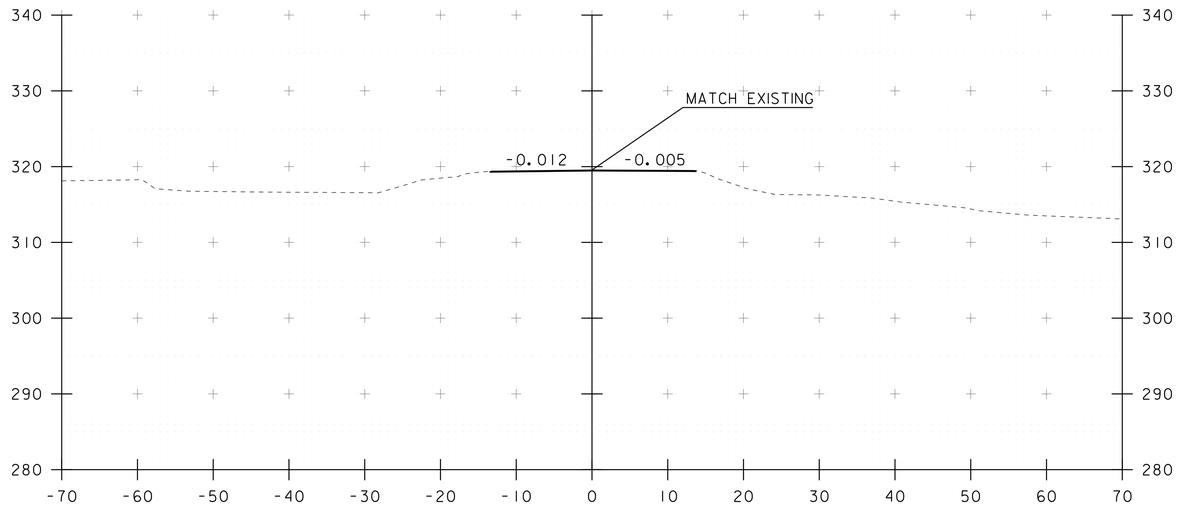

274+25

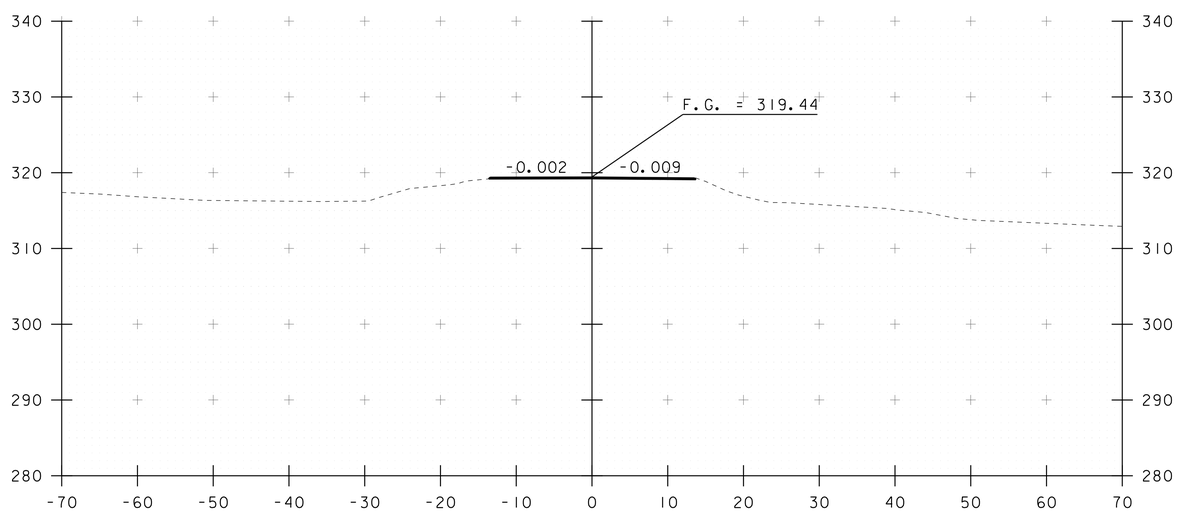

274+00

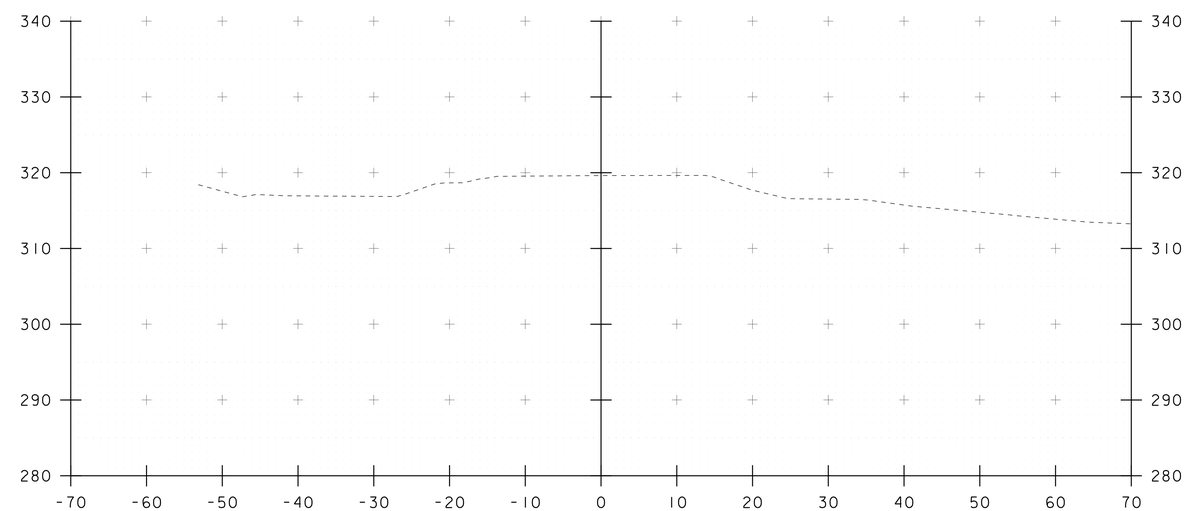

274+50

END APPROACH

STA. 15+50 TO STA. 16+00

PROJECT NAME: RICHMOND	
PROJECT NUMBER: BF 0284(28)	
FILE NAME: s13c070xs.dgn	PLOT DATE: 16-JUN-2016
PROJECT LEADER: R. YOUNG	DRAWN BY: S. COLEY
DESIGNED BY: S. COLEY	CHECKED BY: W. LAMMER
ROADWAY CROSS SECTIONS 6	SHEET 38 OF 51

STA 50+25 RT
BEGIN UNCLASSIFIED CHANNEL EXCAVATION
BEGIN STONE FILL, TYPE III
BEGIN GEOTEXTILE UNDER STONE FILL
BEGIN GRUBBING MATERIAL

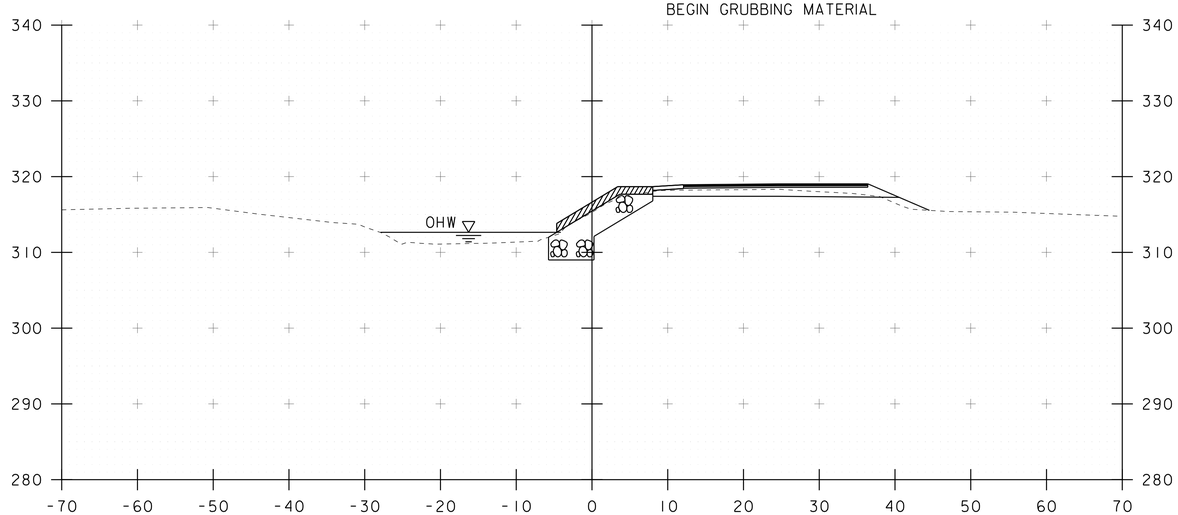

50+25

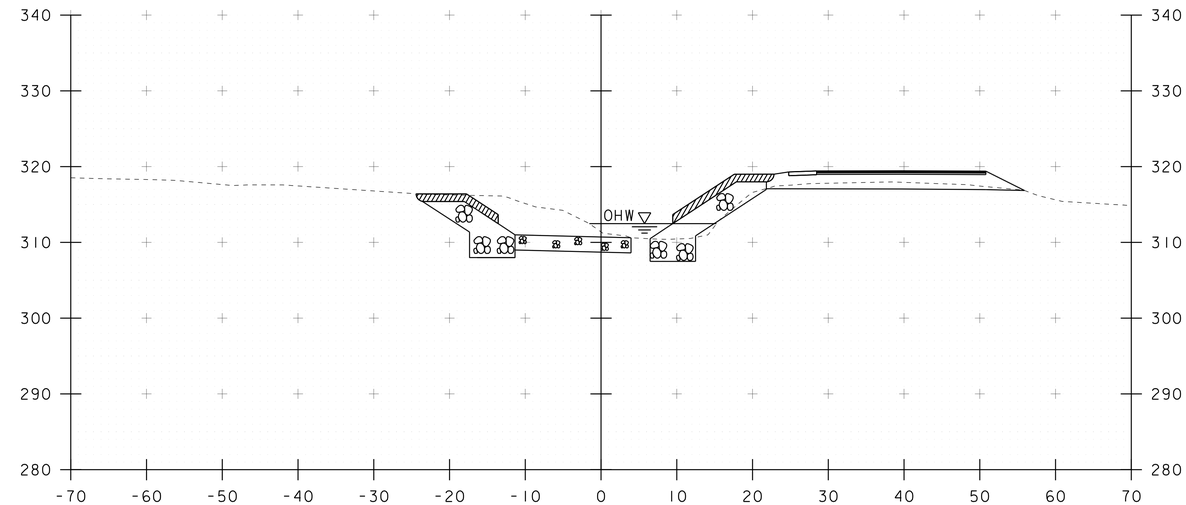

50+60

STA 50+33.63 LT
BEGIN UNCLASSIFIED CHANNEL EXCAVATION
BEGIN STONE FILL, TYPE III & II
BEGIN GEOTEXTILE UNDER STONE FILL
BEGIN GRUBBING MATERIAL

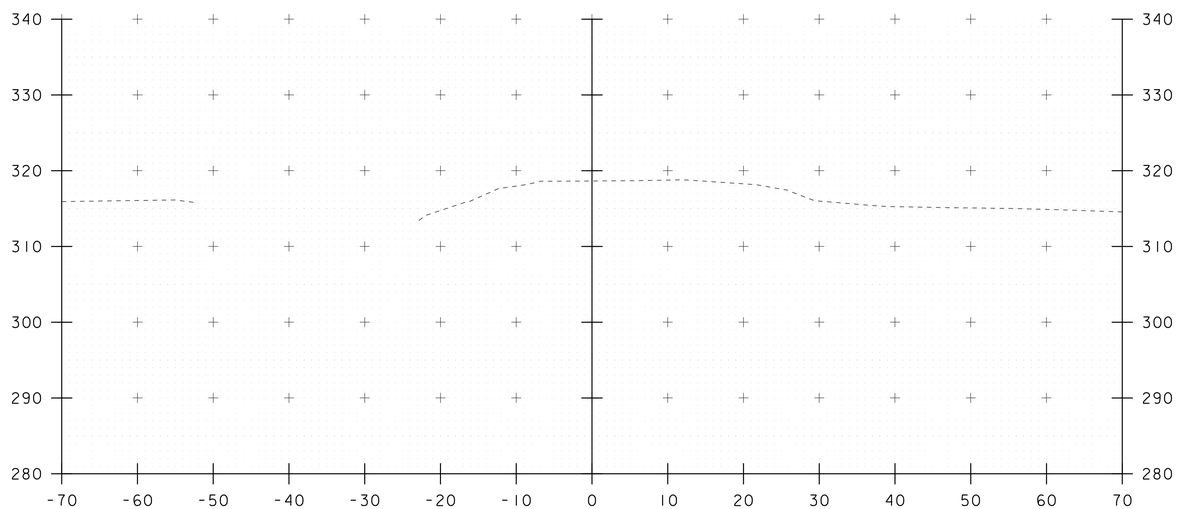

50+00

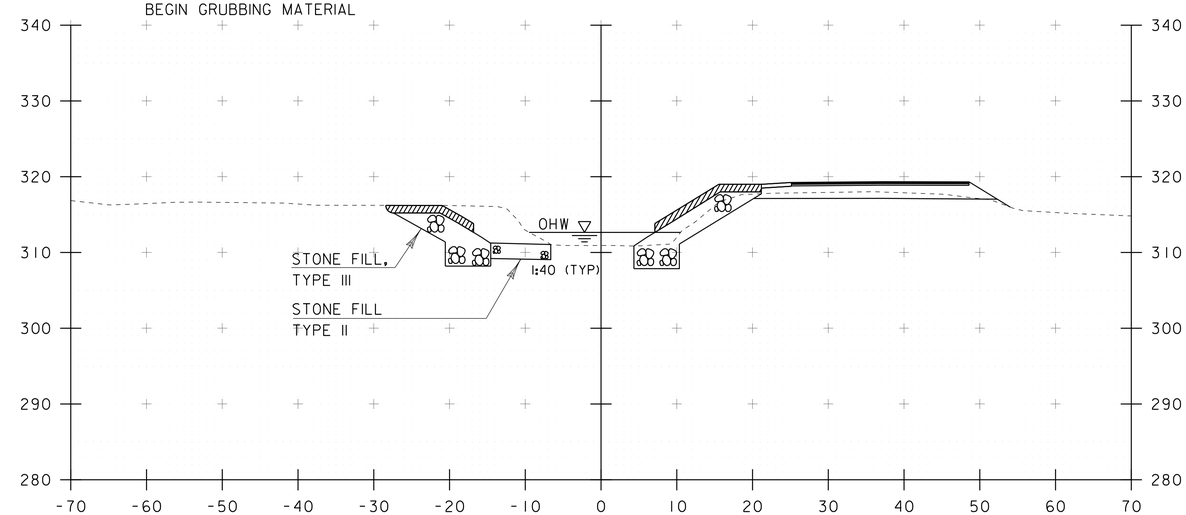

50+50

STA. 50+00 TO STA. 50+60

PROJECT NAME: RICHMOND	
PROJECT NUMBER: BF 0284(28)	
FILE NAME: s13c070xs.dgn	PLOT DATE: 16-JUN-2016
PROJECT LEADER: R. YOUNG	DRAWN BY: S. COLEY
DESIGNED BY: S. COLEY	CHECKED BY: W. LAMMER
CHANNEL CROSS SECTIONS 1	SHEET 39 OF 51

STA 50+80.00 RT
BEGIN STONE FILL TYPE II

STA 50+84.66 RT
END STONE FILL, TYPE III
END GRUBBING MATERIAL

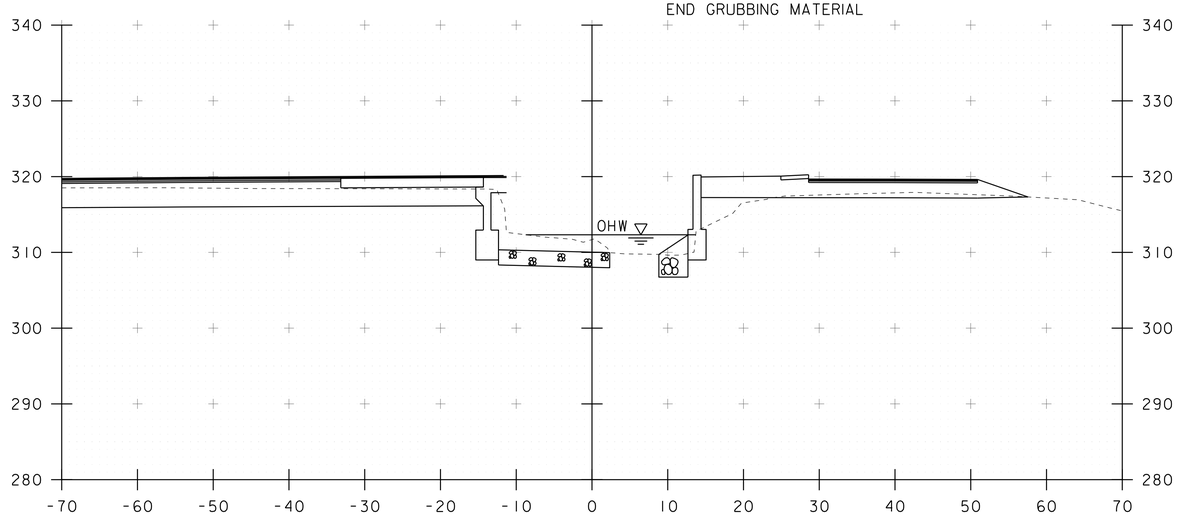

50+80

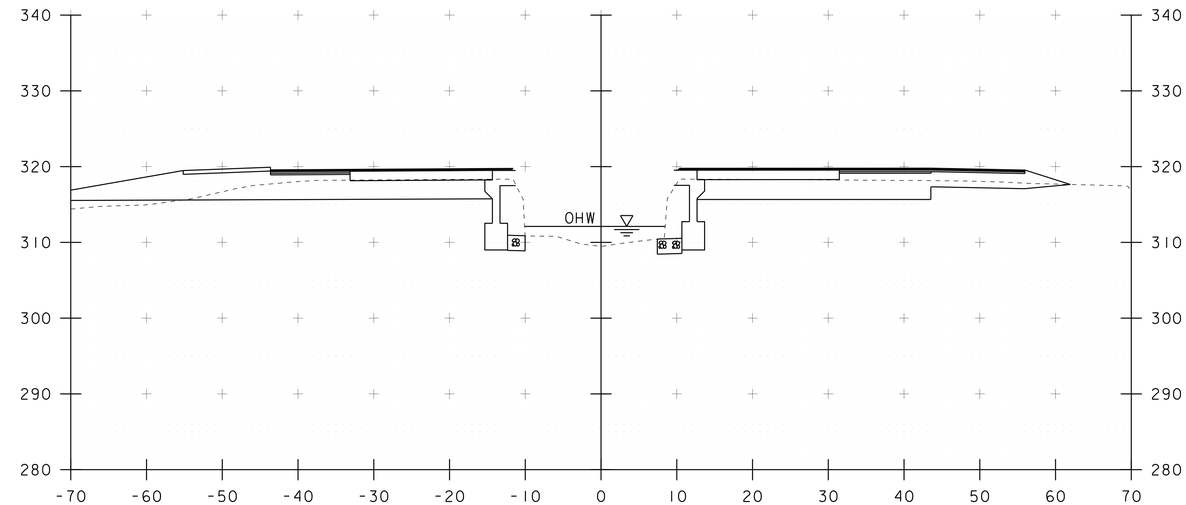

51+00

STA 50+74.77 LT
END STONE FILL, TYPE III
END GRUBBING MATERIAL

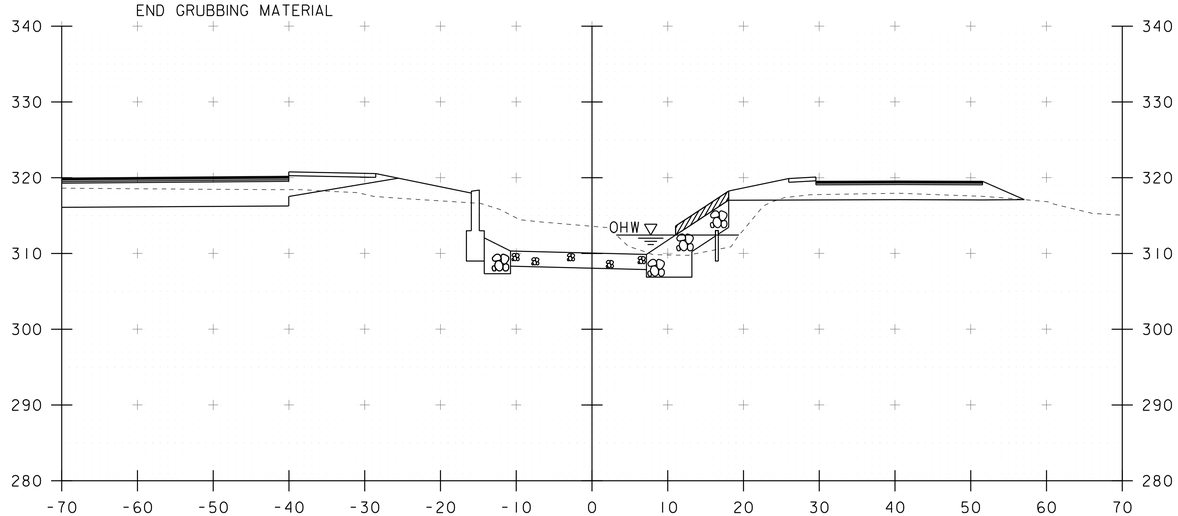

50+70

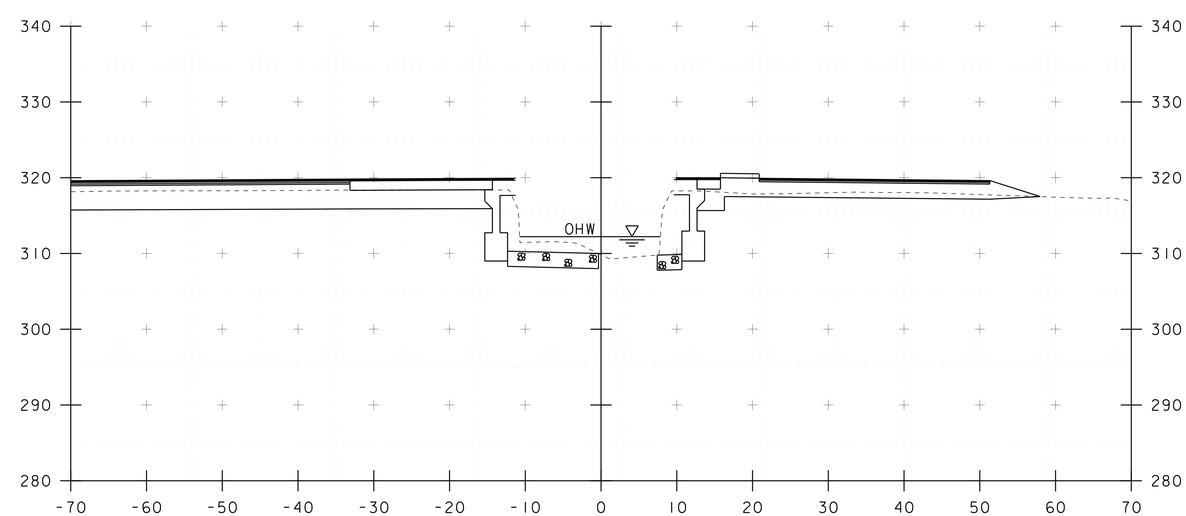

50+90

STA. 50+70 TO STA. 51+00

PROJECT NAME: RICHMOND	
PROJECT NUMBER: BF 0284(28)	
FILE NAME: s13c070xs.dgn	PLOT DATE: 16-JUN-2016
PROJECT LEADER: R. YOUNG	DRAWN BY: S. COLEY
DESIGNED BY: S. COLEY	CHECKED BY: W. LAMMER
CHANNEL CROSS SECTIONS 2	SHEET 40 OF 51

STA 51+29.31 RT
END STONE FILL, TYPE II

STA 51+24.93 RT
BEGIN STONE FILL, TYPE III

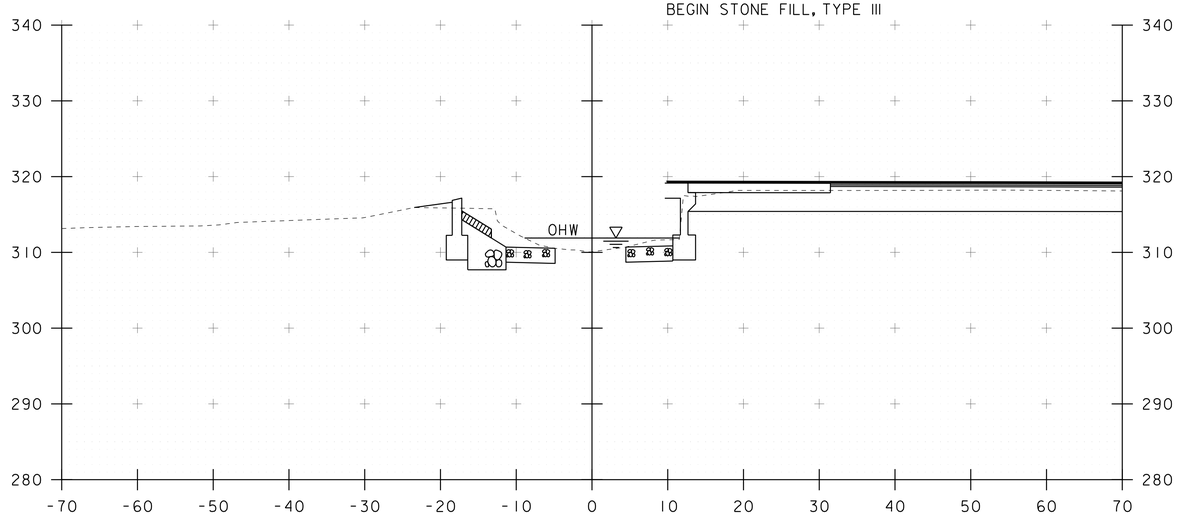

51+20

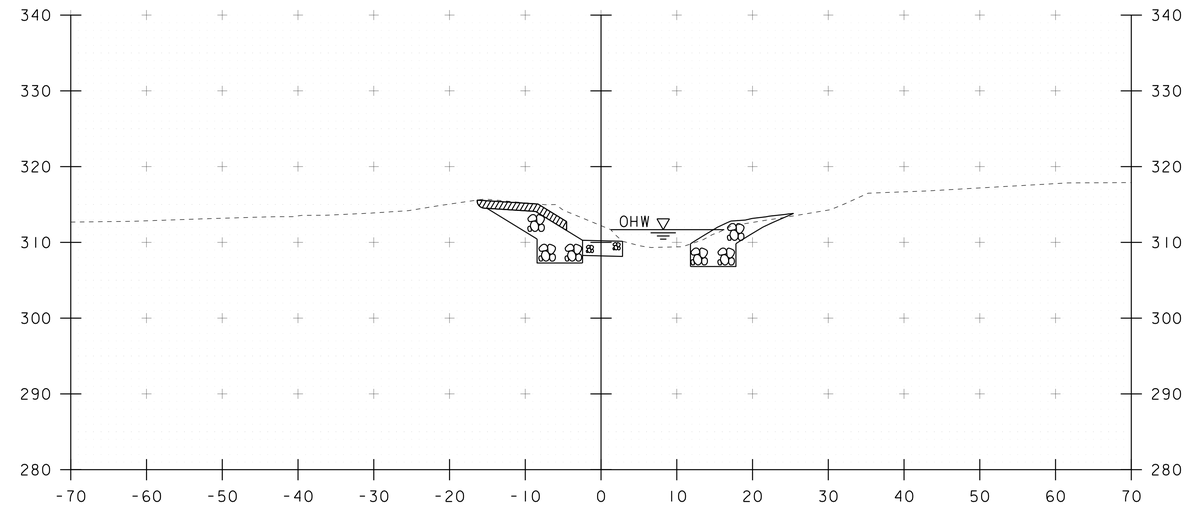

51+40

STA 51+15.27 LT
BEGIN STONE FILL, TYPE III
BEGIN GRUBBING MATERIAL

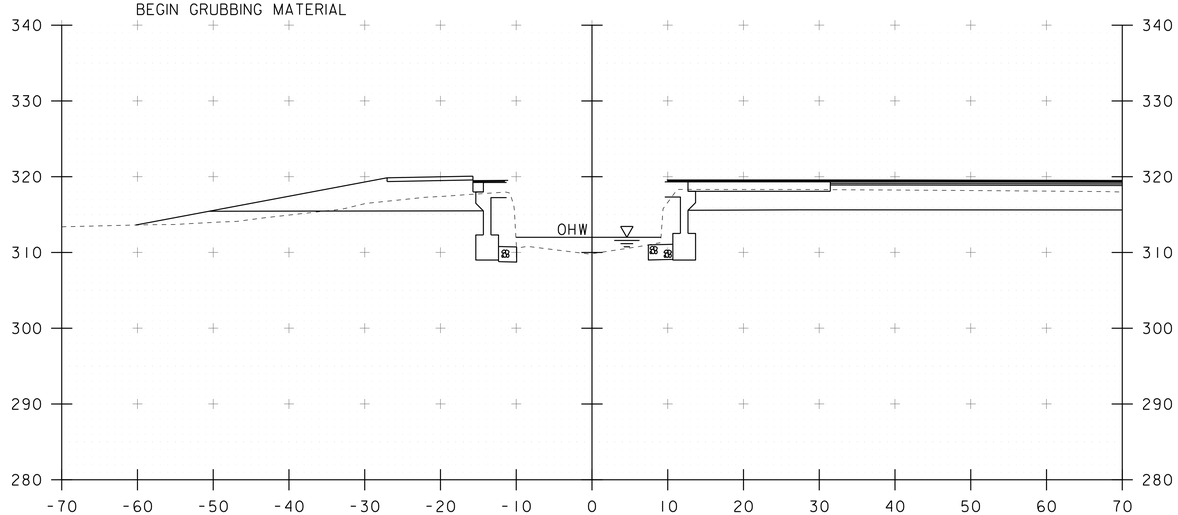

51+10

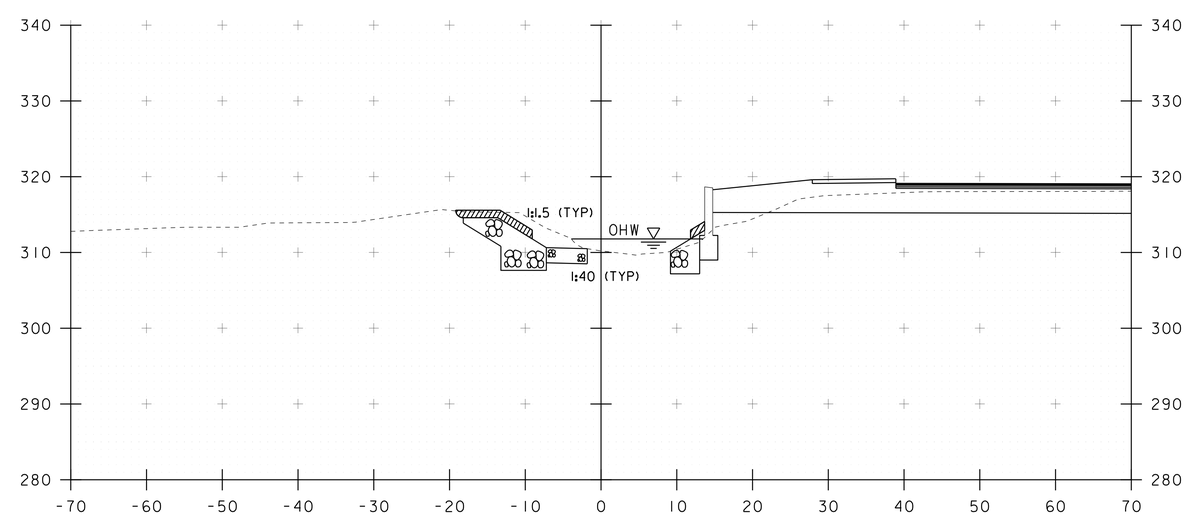

51+30

STA. 51+10 TO STA. 51+40

PROJECT NAME: RICHMOND	
PROJECT NUMBER: BF 0284(28)	
FILE NAME: s13c070xs.dgn	PLOT DATE: 16-JUN-2016
PROJECT LEADER: R. YOUNG	DRAWN BY: S. COLEY
DESIGNED BY: S. COLEY	CHECKED BY: W. LAMMER
CHANNEL CROSS SECTIONS 3	SHEET 41 OF 51

STA 51+66.15 LT
END STONE FILL TYPE II

STA 51+71.89 LT
END UNCLASSIFIED CHANNEL EXCAVATION
END STONE FILL, TYPE III
END GRUBBING MATERIAL

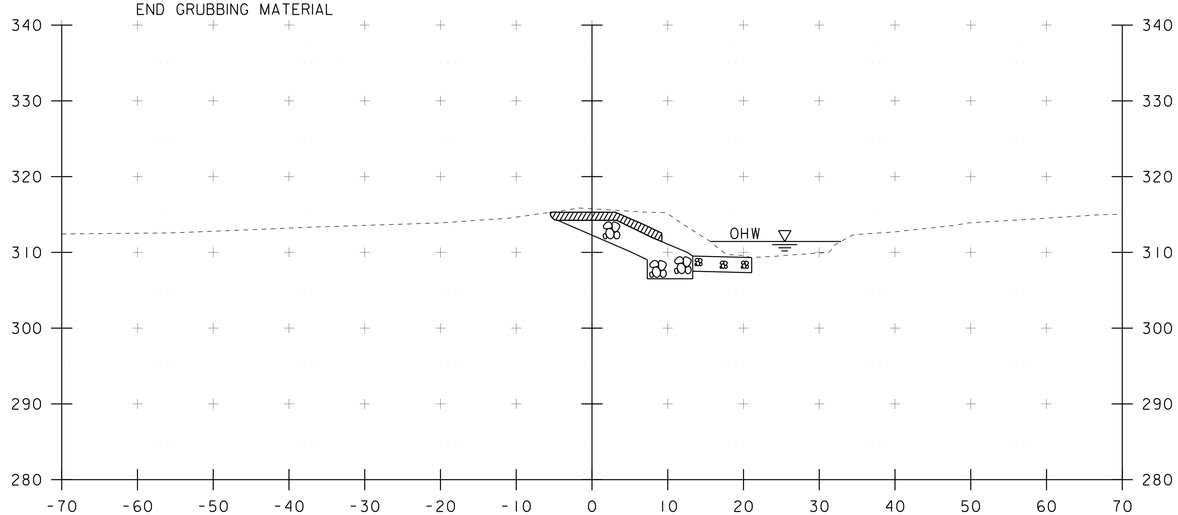

51+60

STA 51+59.42 RT
END UNCLASSIFIED CHANNEL EXCAVATION
END STONE FILL, TYPE III
END GEOTEXTILE UNDER STONE FILL

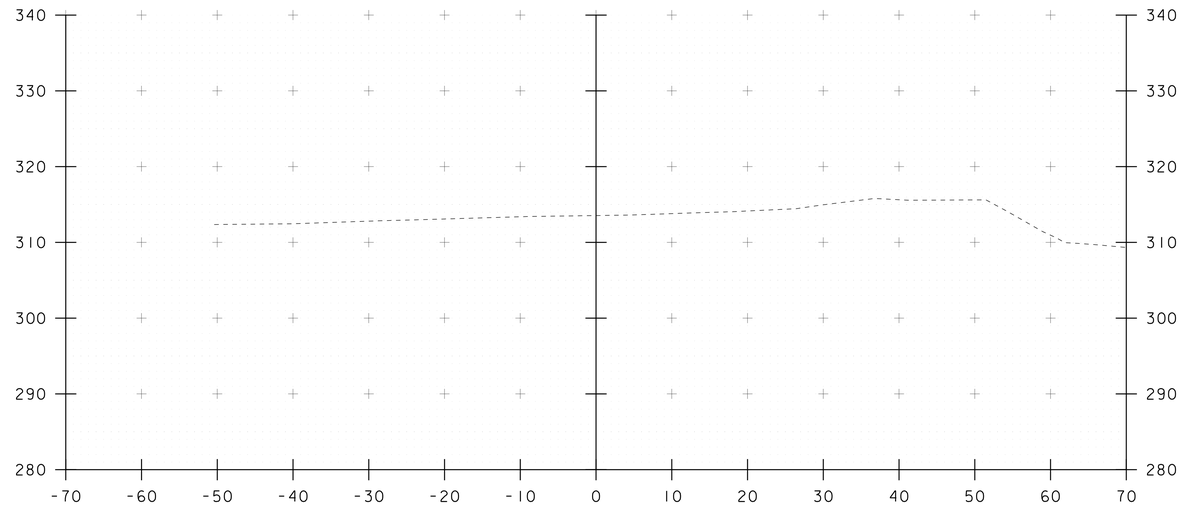

52+00

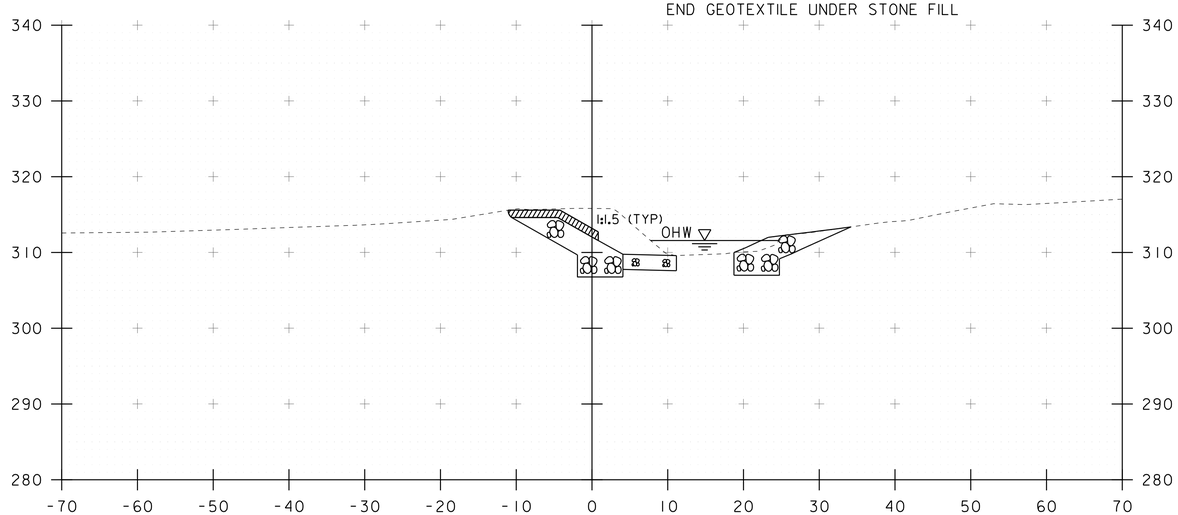

51+50

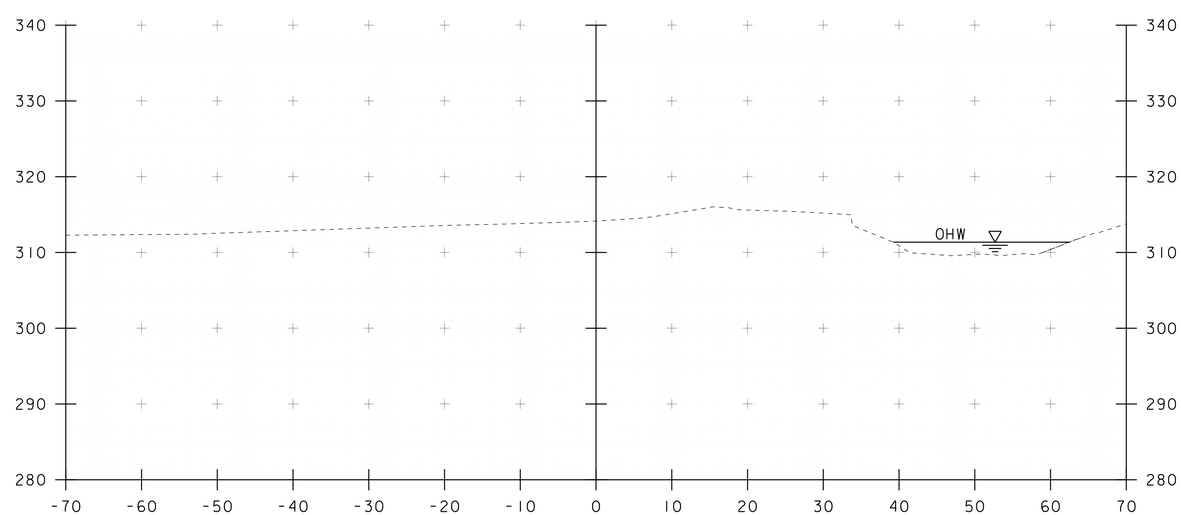

51+80

STA. 51+50 TO STA. 52+00

PROJECT NAME: RICHMOND	
PROJECT NUMBER: BF 0284(28)	
FILE NAME: s13c070xs.dgn	PLOT DATE: 16-JUN-2016
PROJECT LEADER: R. YOUNG	DRAWN BY: S. COLEY
DESIGNED BY: S. COLEY	CHECKED BY: W. LAMMER
CHANNEL CROSS SECTIONS 4	SHEET 42 OF 51

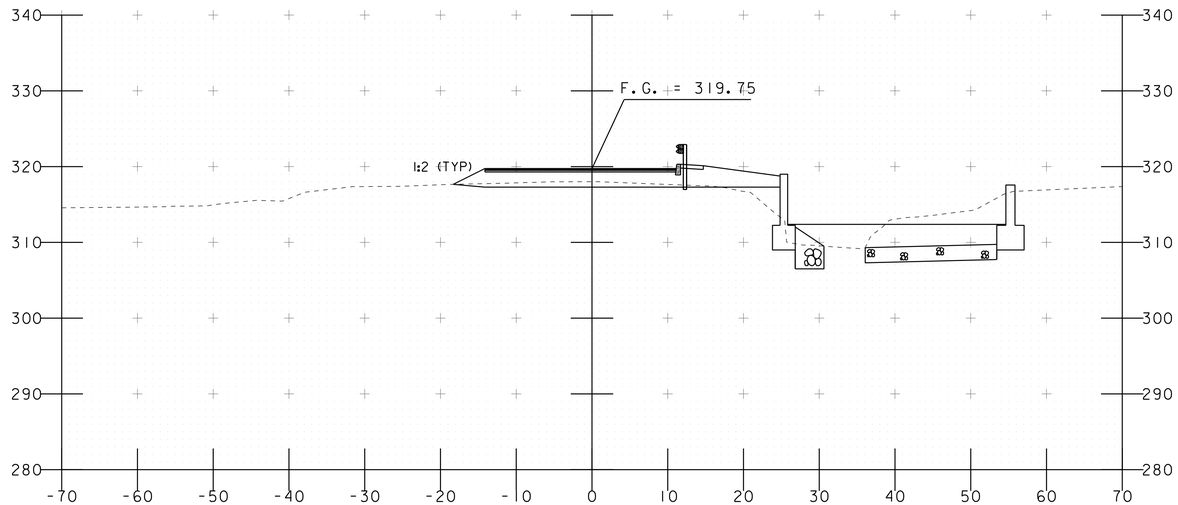

30+25

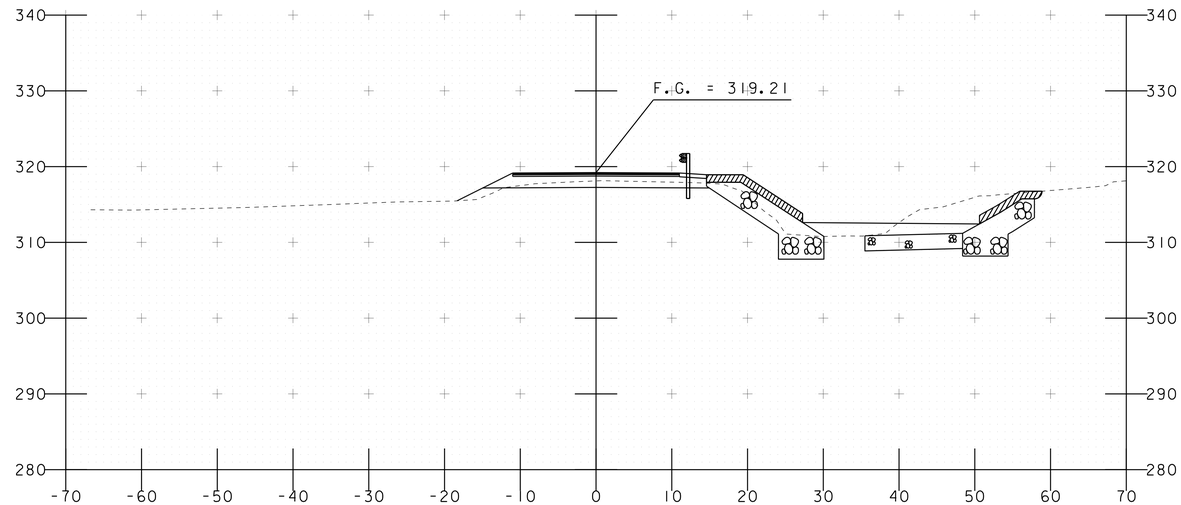

30+75

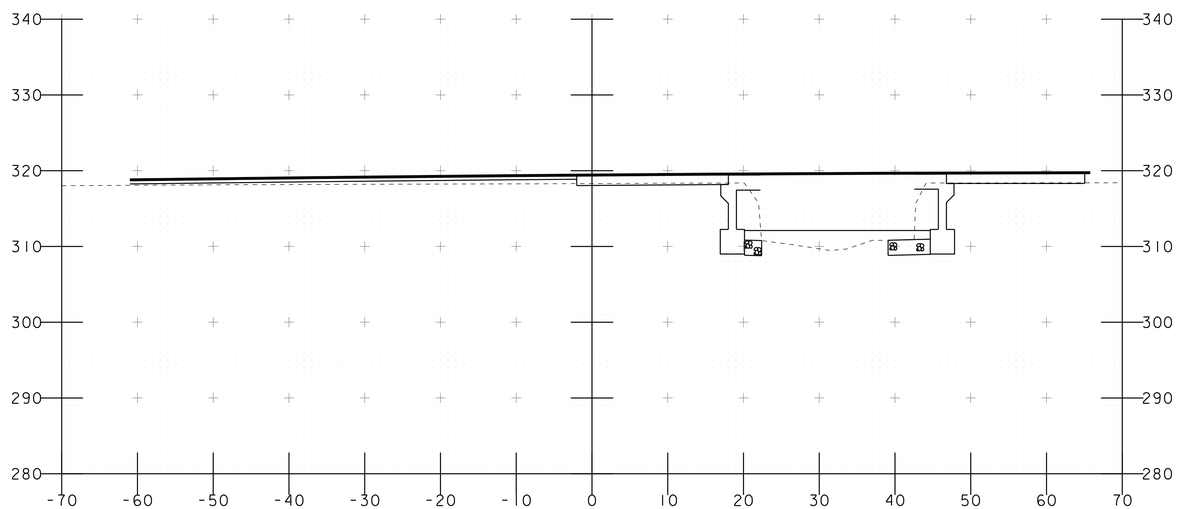

30+00

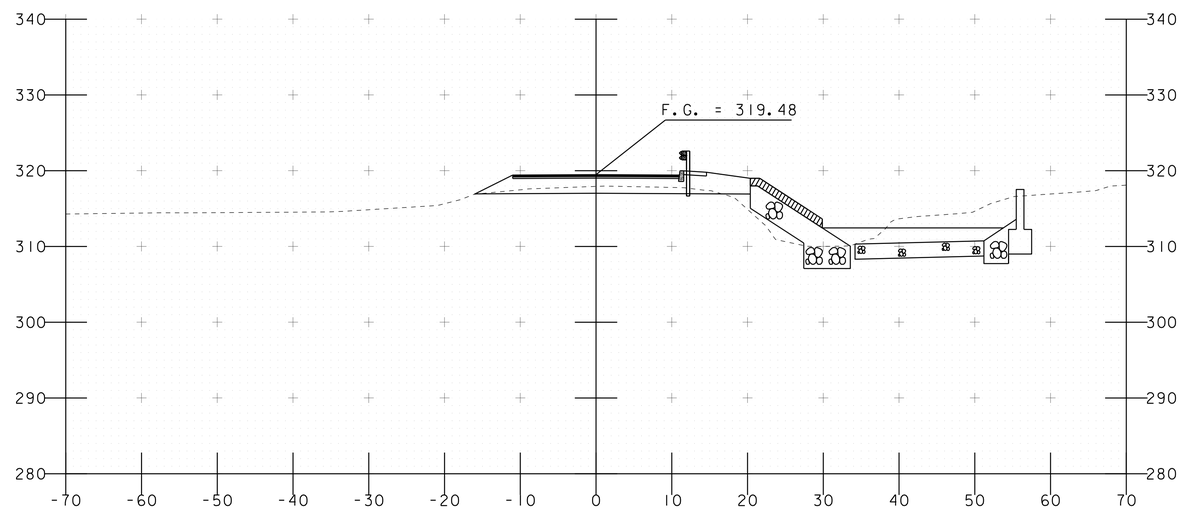

30+50

STA. 30+00 TO STA. 30+75

PROJECT NAME: RICHMOND	
PROJECT NUMBER: BF 0284(28)	
FILE NAME: s13c070xs.dgn	PLOT DATE: 16-JUN-2016
PROJECT LEADER: R. YOUNG	DRAWN BY: S. COLEY
DESIGNED BY: S. COLEY	CHECKED BY: W. LAMMER
TH12 CROSS SECTION 1	SHEET 43 OF 51

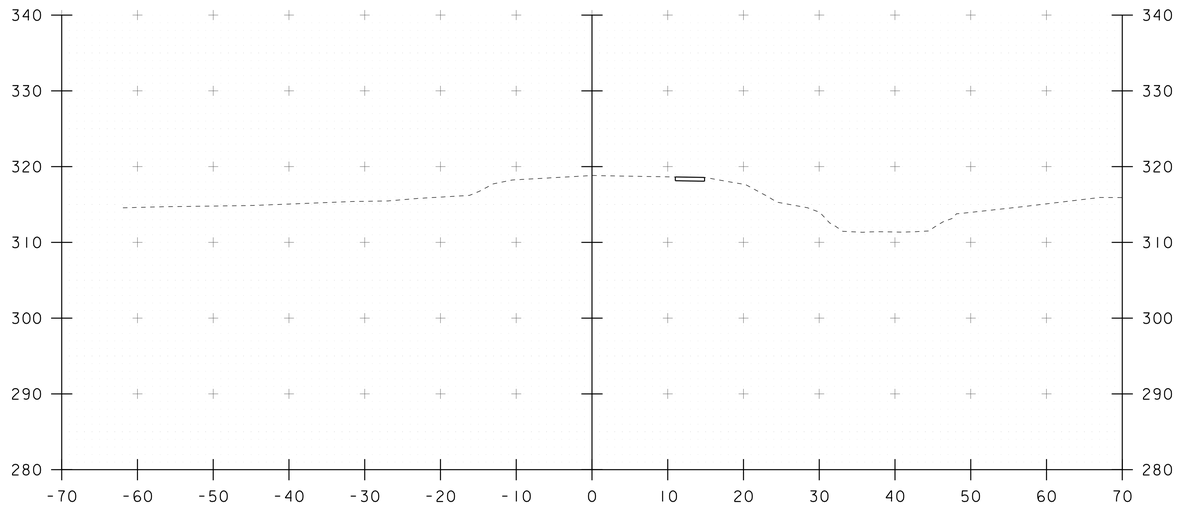

31+25

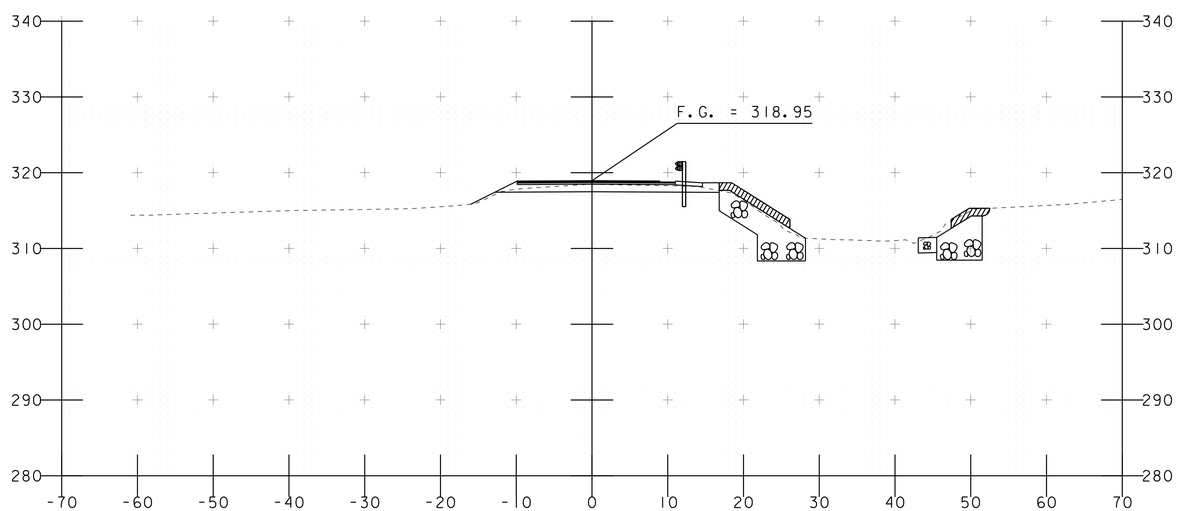

31+00

STA 31+17
END TH-12

STA. 31+00 TO STA. 31+25

PROJECT NAME: RICHMOND	
PROJECT NUMBER: BF 0284(28)	
FILE NAME: s13c070xs.dgn	PLOT DATE: 16-JUN-2016
PROJECT LEADER: R. YOUNG	DRAWN BY: S. COLEY
DESIGNED BY: S. COLEY	CHECKED BY: W. LAMMER
TH12 CROSS SECTION 2	SHEET 44 OF 51

EPSC PLAN NARRATIVE

1.1 PROJECT DESCRIPTION

THIS PROJECT INVOLVES THE REPLACEMENT OF BRIDGE 32 WITH RELATED APPROACH AND CHANNEL WORK. THE PROJECT LOCATION IS IN THE TOWN OF RICHMOND, VT ON US ROUTE 2, BEGINNING AT MILE POST 5.1110 (STA 270+00) AND ENDING AT MILE POST 5.1770 (STA 273+50).

THE NEW STRUCTURE WILL BE APPROXIMATELY 28.73 FEET IN LENGTH WITH 323 FEET OF ROADWAY WORK.

NOTE: AREA OF DISTURBANCE INCLUDES LIMITS OF EARTH DISTURBANCE WITHIN THE PROJECT AREA, AS WELL AS WASTE, BORROW AND STAGING AREAS, AND OTHER EARTH DISTURBING ACTIVITIES WITHIN OR DIRECTLY ADJACENT TO THE PROJECT LIMITS AS SHOWN ON THE ATTACHED EPSC PLAN.

TOTAL AREA OF DISTURBANCE AS SHOWN ON THE ATTACHED EPSC PLAN IS APPROXIMATELY 0.84 ACRES.

IT IS ANTICIPATED THAT THIS PROJECT WILL LAST ONE CONSTRUCTION SEASON.

1.2 SITE INVENTORY

1.2.1 TOPOGRAPHY

THE TOPOGRAPHY OF THE PROJECT AREA IS RELATIVELY FLAT WITH STEEP BANKS ALONG THE UPSTREAM CHANNEL ALONGSIDE WINGWALL ONE. IT IS RURAL MOSTLY WOODED TO THE NORTH WITH AGRICULTURAL FIELDS TO THE SOUTH.

1.2.2 DRAINAGE, WATERWAYS, BODIES OF WATER, AND PROXIMITY TO NATURAL OR MAN-MADE WATER FEATURES

SNIPE ISLAND BROOK IS THE ONLY WATER SOURCE ON THE PROJECT SITE.

THE BROOK IS CLASSIFIED AS SINUOUS AND ALLUVIAL AT THE SITE. THE STREAM BED CONSISTS OF GRAVEL AND SAND. THE DRAINAGE AREA AT THE BRIDGE CROSSING IS 5.2 SQUARE MILES.

THERE IS AN 18" CORRUGATED METAL PIPE RUNNING UNDER TH 12 RUNNING PARALLEL TO US ROUTE 2.

1.2.3 VEGETATION

THE VEGETATION IN THE PROJECT AREA CONSISTS OF HARDWOOD TREES AND UNDERGROWTH. THE IMPACT TO VEGETATION WILL BE LIMITED TO THAT WHICH IS DIRECTLY AFFECTED BY REPLACEMENT OF THE EXISTING BRIDGE. UPON PROJECT COMPLETION, THE CHANNEL WILL BE ARMORED WITH STONE FILL TYPE III AND II AS SPECIFIED ON THE PLANS. DISTURBED VEGETATION WILL BE REESTABLISHED WITH STANDARD SEED AND MULCH PRACTICES.

1.2.4 SOILS

ALL SOIL DATA CAME FROM THE U.S. DEPARTMENT OF AGRICULTURE SOIL CONSERVATION SERVICE FOR THE COUNTY OF CHITTENDEN, VERMONT.

LIMERICK SILT LOAM	0% TO 3% SLOPES	"K" FACTOR = 0.49
COLTON GRAVELLY LOAMY SAND	12% TO 20% SLOPES	"K" FACTOR = 0.17

NOTE: K-VALUES GENERALLY INDICATE THE FOLLOWING:
0.0-0.23 = LOW EROSION POTENTIAL
0.24-0.36 = MODERATE EROSION POTENTIAL
0.37 AND HIGHER = HIGH EROSION POTENTIAL

1.2.5 SENSITIVE RESOURCE AREAS

CRITICAL HABITATS: NO
HISTORICAL OR ARCHEOLOGICAL AREAS: YES – NORTHEAST AND SOUTHEAST OF BRIDGE
PRIME AGRICULTURAL LAND: NO
THREATENED AND ENDANGERED SPECIES: NORTHERN LONG-EARED BAT
WATER RESOURCE: SNIPE ISLAND BROOK
WETLANDS: YES – CLASS II NORTHWEST OF INTERSECTION OF US ROUTE 2 AND TH 12.
CLASS III SOUTH OF US ROUTE 2, WEST OF SNIPE ISLAND BROOK.

1.3 RISK EVALUATION

THIS PROJECT DOES NOT FALL UNDER THE JURISDICTION OF GENERAL PERMIT 3-9020 FOR STORMWATER RUNOFF FROM CONSTRUCTION SITES. SHOULD CHANGES PRIOR TO OR DURING CONSTRUCTION RESULT IN ONE OR MORE ACRES OF EARTH DISTURBANCE OR SHOULD THE PROJECT BECOME PART OF A LARGER PLAN OF DEVELOPMENT, THE CONTRACTOR WILL BE RESPONSIBLE FOR ANY ADDITIONAL PERMITTING.

1.4 EROSION PREVENTION AND SEDIMENT CONTROL

THESE EROSION CONTROL PLANS ARE MEANT AS A GUIDELINE FOR PREVENTING EROSION AND CONTROLLING SEDIMENT TRANSPORT. THE PRINCIPLES OUTLINED IN THIS NARRATIVE CONSIST OF APPLYING MEASURES THROUGHOUT CONSTRUCTION OF THE PROJECT IN ORDER TO MINIMIZE SEDIMENT TRANSPORT TO THE RECEIVING WATERS. THE MEASURES INCLUDE STABILIZATION AND STRUCTURAL PRACTICES, STORM WATER CONTROLS AND OTHER POLLUTION PREVENTION PRACTICES. THEY HAVE BEEN PROPOSED BY THE DESIGNER AS A BASIS FOR PROTECTING RESOURCES AND WILL NEED TO BE BUILT UPON BASED ON THE SPECIFIC MEANS AND METHODS OF THE CONTRACTOR. REFER TO THE LOW RISK SITE HANDBOOK AND APPROPRIATE DETAIL SHEETS FOR SPECIFIC GUIDANCE AND CONSTRUCTION DETAILING.

ALL MEASURES SHALL BE REGULARLY MAINTAINED AND SHALL BE CHECKED FOR SEDIMENT BUILD-UP. SEDIMENT SHALL BE DISPOSED OF AT AN APPROVED SITE WHERE IT WILL NOT BE SUBJECT TO EROSION.

1.4.1 MARK SITE BOUNDARIES

SITE BOUNDARIES AND AREAS CONSTRUCTION EQUIPMENT CAN ACCESS SHALL BE DELINEATED.

TO ADEQUATELY PROTECT THE WETLANDS ALONG THE WESTERN PROJECT APPROACH, AND ARCHAELOLOGICALLY SENSITIVE AREAS ALONG THE EASTERN PROJECT APPROACH, BARRIER FENCE SHALL BE USED TO DEMARCATE THE PROJECT LIMITS.

1.4.2 LIMIT DISTURBANCE AREA

PREVENTING INITIAL SOIL EROSION BY MINIMIZING THE EXPOSED AREA IS MUCH MORE EFFECTIVE THAN TREATING ERODED SEDIMENT. EARTH DISTURBANCE CAN BE MINIMIZED THROUGH CONSTRUCTION PHASING BY ONLY OPENING UP EARTH AS NECESSARY. THIS CAN LIMIT THE AREA THAT WILL BE DISTURBED AND EXPOSED TO EROSION. EMPLOY TEMPORARY CONSTRUCTION STABILIZATION PRACTICES IN INCREMENTAL STAGES AS PHASES CHANGE. FOR PROJECTS WHICH FALL UNDER THE CONSTRUCTION GENERAL PERMIT, ONLY THE ACREAGE LISTED ON THE PERMIT AUTHORIZATION MAY BE EXPOSED AT ANY GIVEN TIME.

MAINTAINING VEGETATED BUFFERS ALONG STREAM BANKS, WETLANDS OR OTHER SENSITIVE AREAS IS A CRUCIAL EROSION AND SEDIMENT CONTROL MEASURE THAT SHOULD BE ESTABLISHED WHEREVER POSSIBLE.

1.4.3 SITE ENTRANCE/EXIT STABILIZATION

TRACKING OF SEDIMENT ONTO PUBLIC HIGHWAYS SHALL BE MNIMIZED TO REDUCE THE POTENTIAL FOR RUNOFF ENTERING RECEIVING WATERS. INSTALLATION SHALL COINCIDE WITH THE CONTRACTOR'S PROGRESS SCHEDULE.

STABILIZED CONSTRUCTION ENTRANCES SHALL BE INSTALLED AS PROPOSED ON THE EPSC PLAN AND ANYWHERE EQUIPMENT WILL BE GOING FROM AREAS OF EXPOSED SOILS TO PAVED SURFACES.

1.4.4 INSTALL SEDIMENT BARRIERS

SEDIMENT BARRIERS SHALL BE UTILIZED TO INTERCEPT RUNOFF AND ALLOW SUSPENDED SEDIMENT TO SETTLE OUT. THEY SHALL BE INSTALLED PRIOR TO ANY UP SLOPE WORK.

SILT FENCE WILL BE INSTALLED AS PROPOSED ON THE EPSC PLAN.

TURBIDITY CURTAIN WILL BE INSTALLED AS PROPOSED ON THE EPSC PLAN. INSTALLATION OF THE STONE FILL IN THE CHANNEL MAY NEED TO BE COMPLETED IN PHASES.

1.4.5 DIVERT UPLAND RUNOFF

DIVERSIONARY MEASURES SHALL BE USED TO INTERCEPT RUNOFF FROM ABOVE THE CONSTRUCTION AND DIRECT IT AROUND THE DISTURBED AREA SO THAT CLEAN WATER DOES NOT BECOME MUDDIED WHILE TRAVELING OVER EXPOSED SOILS ON THE CONSTRUCTION SITE.

THE IMMEDIATE PROJECT AREA IS NOT LIKELY TO BE IMPACTED BY RUNOFF FROM UPSLOPE AREAS. THEREFORE, IT IS NOT ANTICIPATED THAT DIVERSION MEASURES WILL BE NECESSARY. CONTRACTOR TO INSTALL DIVERSION MEASURES IF IT IS NECESSARY.

1.4.6 SLOW DOWN CHANNELIZED RUNOFF

CHECK STRUCTURES SHALL BE UTILIZED, IF NECESSARY, TO REDUCE THE VELOCITY, AND THUS THE EROSIVE POTENTIAL, OF CONCENTRATED FLOW IN CHANNELS.

1.4.7 CONSTRUCT PERMANENT CONTROLS

PERMANENT STORMWATER TREATMENT DEVICES SHALL BE INSTALLED AS SHOWN ON THE PLANS AND IN ACCORDANCE WITH PERMIT CONDITIONS.

THERE ARE NO PERMANENT STORM WATER TREATMENT DEVICES ANTICIPATED ON THIS PROJECT.

1.4.8 STABILIZE EXPOSED SOILS DURING CONSTRUCTION

ALL AREAS OF DISTURBANCE MUST HAVE TEMPORARY STABILIZATION IN PLACE WITHIN 48 HOURS OF DISTURBANCE OR IN ACCORDANCE WITH THE CONSTRUCTION GENERAL PERMIT 3-9020 AUTHORIZATION.

SURFACE ROUGHENING OF ALL EXPOSED SLOPES, COMBINED WITH TEMPORARY MULCHING, SHALL BE UTILIZED ON A REGULAR BASIS. BIODEGRADABLE EROSION CONTROL MATTING OR AN EQUIVALENT SHALL BE USED TO STABILIZE ALL SLOPES STEEPER THAN 1:3.

THE FORECAST OF RAINFALL EVENTS SHALL TRIGGER IMMEDIATE PROTECTION OF EXPOSED SOILS.

1.4.9 WINTER STABILIZATION

VARIOUS MEASURES SPECIFIC TO WINTER MAY BE NECESSARY SHOULD THE PROJECT EXTEND INTO WINTER (OCTOBER 15 THROUGH APRIL 15). REFER TO THE LOW RISK SITE HANDBOOK FOR GUIDANCE.

1.4.10 STABILIZE SOIL AT FINAL GRADE

EXPOSED SOIL MUST BE STABILIZED WITHIN 48 HOURS OF REACHING FINAL GRADE.

SEED, MULCH, FERTILIZER AND LIME SHALL BE USED TO ESTABLISH PERMANENT VEGETATION. FOR SLOPES STEEPER THAN 1:3, BIODEGRADABLE EROSION CONTROL MATTING OR AN EQUIVALENT SHALL BE USED INSTEAD OF MULCH.

1.4.11 DE-WATERING ACTIVITIES

DISCHARGE FROM DEWATERING ACTIVITIES THAT FLOWS OFF OF THE CONSTRUCTION SITE MUST NOT CAUSE OR CONTRIBUTE TO A VIOLATION OF THE VERMONT WATER QUALITY STANDARDS.

DEWATERING IS NOT ANTICIPATED FOR THIS PROJECT.

1.4.12 INSPECT YOUR SITE

INSPECT THE PROJECT SITE BASED ON SPECIAL PROVISION REQUIREMENTS OR CONSTRUCTION GENERAL PERMIT AUTHORIZATION STIPULATIONS.

1.5 SEQUENCE AND STAGING

THIS SECTION WILL BE DEVELOPED BY THE CONTRACTOR USING THE GUIDANCE OUTLINED IN THE VTRANS EPSC PLAN CONTRACTOR CHECKLIST.

1.5.1 CONSTRUCTION SEQUENCE

1.5.2 OFF-SITE ACTIVITIES

IN ADDITION TO THE CONTRACTOR CHECKLIST ANY ACTIVITIES OUTSIDE THE CONSTRUCTION LIMITS SHALL FOLLOW SUBSECTIONS 105.25- 105.29 OF THE STANDARD SPECIFICATIONS FOR CONSTRUCTION.

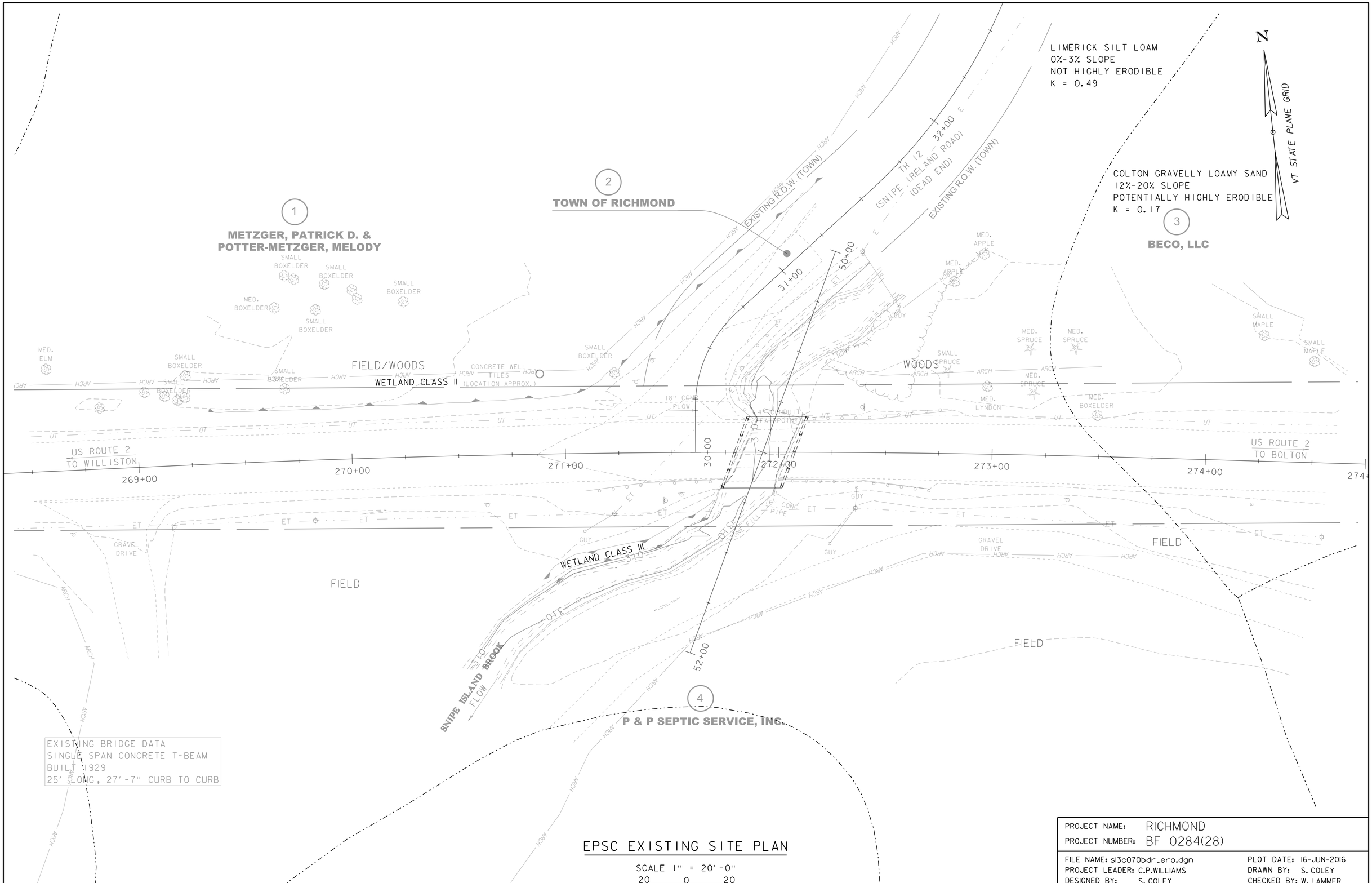

EPSC EXISTING SITE PLAN

SCALE 1" = 20'-0"
20 0 20

PROJECT NAME: RICHMOND	
PROJECT NUMBER: BF 0284(28)	
FILE NAME: sl3c070bdr_ero.dgn	PLOT DATE: 16-JUN-2016
PROJECT LEADER: C.P.WILLIAMS	DRAWN BY: S. COLEY
DESIGNED BY: S. COLEY	CHECKED BY: W. LAMMER
EPSC EXISTING SITE PLAN	SHEET 46 OF 51

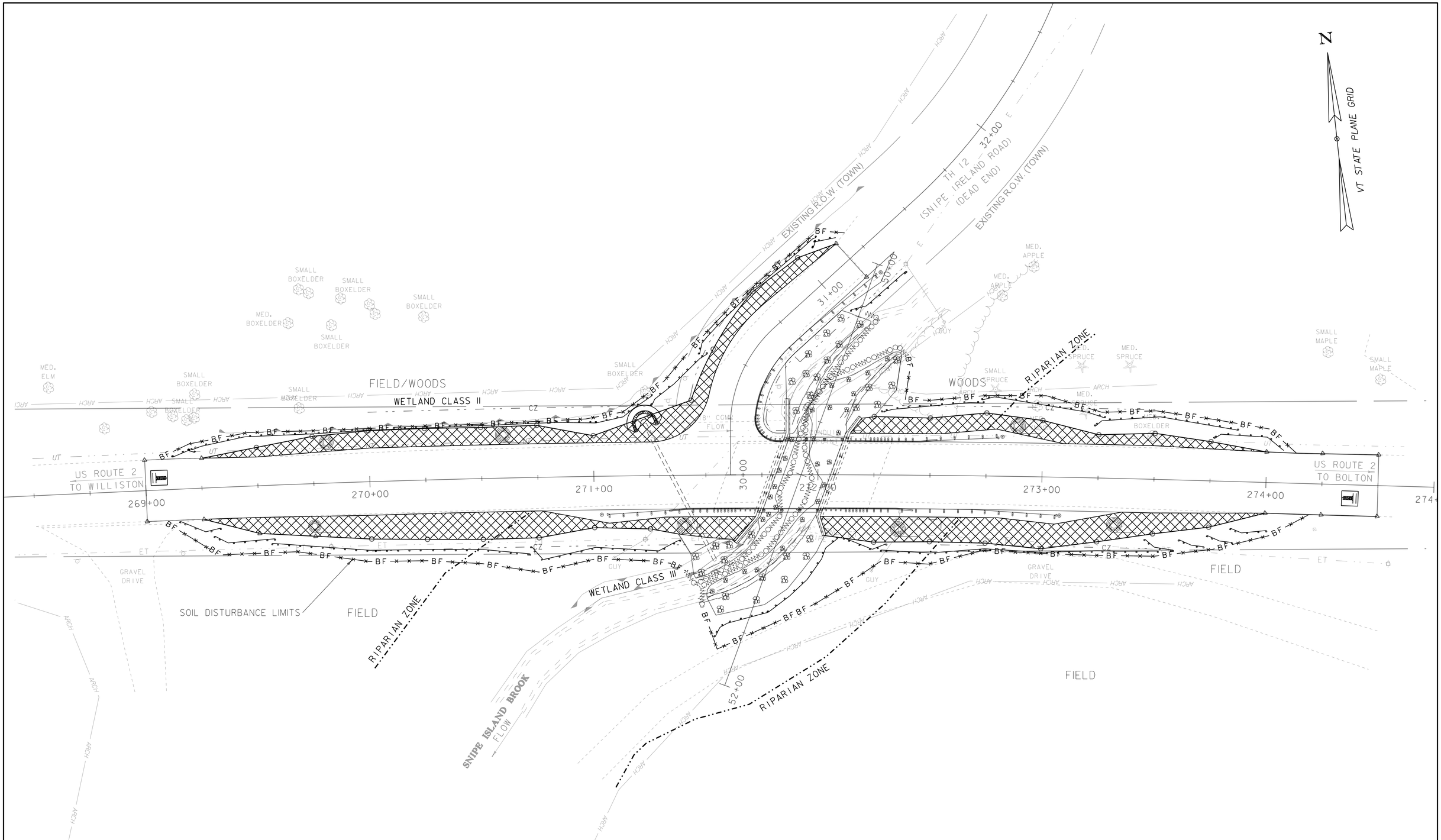

NOTES:

1. FOR CLARITY, AREAS TO BE SEEDED AND MULCHED HAVE NOT BEEN INDICATED. HOWEVER, ALL DISTURBED AREAS SHALL BE SEEDED AND MULCHED AS APPLICABLE.
2. IMPACTS IN RAPARIAN ZONE SHALL BE MINIMIZED

EPSC PLAN

SCALE 1" = 20'-0"

20 0 20

PROJECT NAME: RICHMOND	
PROJECT NUMBER: BF 0284(28)	
FILE NAME: sl3c070bdr_ero	PLOT DATE: 16-JUN-2016
PROJECT LEADER: R. YOUNG	DRAWN BY: S. COLEY
DESIGNED BY: S. COLEY	CHECKED BY: W. LAMMER
EPSC PLAN	SHEET 47 OF 51

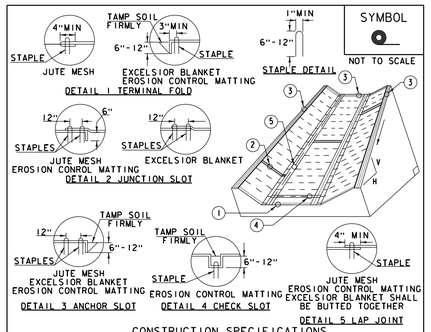

CONSTRUCTION SPECIFICATIONS

1. EROSION MATTING, CHECK SLOTS, SHALL BE SPACED IN DITCH CHANNEL SO THAT ONE OCCURS WITHIN EACH 50' ON SLOPES OF MORE THAN 4% AND LESS THAN 6%. ON SLOPES OF 6% OR MORE, THEY SHALL BE SPACED SO THAT ONE OCCURS WITHIN EACH 25'.
2. APPLY FERTILIZER, LIME SEED PRIOR TO PLACING MATTING.
3. STAPLES ARE TO BE PLACED ALTERNATELY, IN COLUMNS APPROXIMATELY 2' APART AND IN ROWS APPROXIMATELY 3' APART. APPROXIMATELY 175 STAPLES ARE REQUIRED PER 4'X225' ROLL OF MATERIAL AND 125 STAPLES ARE REQUIRED PER 4'X150' ROLL OF MATERIAL.
4. DISTURBED AREAS SHALL BE SMOOTHLY GRADED. EROSION CONTROL MATERIAL SHALL BE PLACED LOOSELY OVER GROUND SURFACE. DO NOT STRETCH.
5. ALL TERMINAL ENDS AND TRANSVERSE LAPS SHALL BE STAPLED AT APPROXIMATELY 12" INTERVALS.

ADAPTED FROM DETAILS PROVIDED BY: NEW YORK STATE DEC
ORIGINALLY DEVELOPED BY USDA-NRCS
VERMONT DEPARTMENT OF ENVIRONMENTAL CONSERVATION

ROLLED EROSION CONTROL PRODUCT (RECP) DITCH

NOTES:
REFER TO "THE VERMONT STANDARDS & SPECIFICATIONS FOR EROSION PREVENTION & SEDIMENT CONTROL -2006- " FROM THE VT AGENCY OF NATURAL RESOURCES FOR ADDITIONAL GUIDANCE.
THIS WORK SHALL BE PERFORMED IN ACCORDANCE WITH SECTION 653 AND AS SHOWN IN THE PLANS FOR TEMPORARY EROSION MATTING (PAY ITEM 653.20) OR PERMANENT EROSION MATTING (PAY ITEM 653.21).

REVISIONS	
MARCH 8, 2007	JMF
APRIL 16, 2007	WHF
JANUARY 13, 2009	WHF

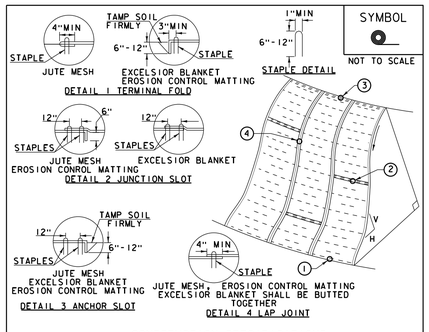

CONSTRUCTION SPECIFICATIONS

1. APPLY TO SLOPES GREATER THAN 3H: 1V OR WHERE NECESSARY TO AID IN ESTABLISHING VEGETATION.
2. APPLY FERTILIZER, LIME SEED PRIOR TO PLACING MATTING.
3. STAPLES ARE TO BE PLACED ALTERNATELY, IN COLUMNS APPROXIMATELY 2' APART AND IN ROWS APPROXIMATELY 3' APART. APPROXIMATELY 175 STAPLES ARE REQUIRED PER 4'X225' ROLL OF MATERIAL AND 125 STAPLES ARE REQUIRED PER 4'X150' ROLL OF MATERIAL.
4. DISTURBED AREAS SHALL BE SMOOTHLY GRADED. EROSION CONTROL MATERIAL SHALL BE PLACED LOOSELY OVER GROUND SURFACE. DO NOT STRETCH.
5. ALL TERMINAL ENDS AND TRANSVERSE LAPS SHALL BE STAPLED AT APPROXIMATELY 12" INTERVALS.

ADAPTED FROM DETAILS PROVIDED BY: NEW YORK STATE DEC
ORIGINALLY DEVELOPED BY USDA-NRCS
VERMONT DEPARTMENT OF ENVIRONMENTAL CONSERVATION

ROLLED EROSION CONTROL PRODUCT (RECP) SIDE SLOPE

NOTES:
REFER TO "THE VERMONT STANDARDS & SPECIFICATIONS FOR EROSION PREVENTION & SEDIMENT CONTROL -2006- " FROM THE VT AGENCY OF NATURAL RESOURCES FOR ADDITIONAL GUIDANCE.
THIS WORK SHALL BE PERFORMED IN ACCORDANCE WITH SECTION 653 AND AS SHOWN IN THE PLANS FOR TEMPORARY EROSION MATTING (PAY ITEM 653.20) OR PERMANENT EROSION MATTING (PAY ITEM 653.21).

REVISIONS	
APRIL 16, 2007	JMF
JANUARY 13, 2009	WHF

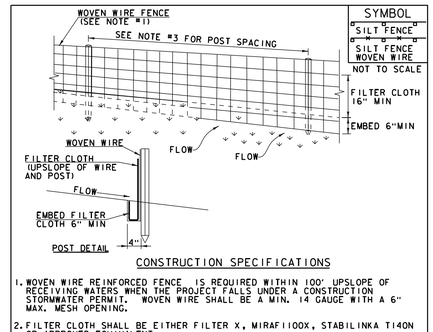

CONSTRUCTION SPECIFICATIONS

1. WOVEN WIRE REINFORCED FENCE IS REQUIRED WITHIN 100' UPSLOPE OF RECEIVING WATERS WHEN THE PROJECT FALLS UNDER A CONSTRUCTION STORMWATER PERMIT. WOVEN WIRE SHALL BE A MIN. 14 GAUGE WITH A 6" MAX. MESH OPENING.
2. FILTER CLOTH SHALL BE EITHER FILTER X, MIRAFI 100X, STABILINKA T140N OR APPROVED EQUIVALENT.
3. POST SPACING FOR WIRE-BACKED FENCE SHALL BE 10' MAXIMUM. FOR FILTER-CLOTH FENCE, WHEN ELONGATION IS >50%, POST SPACING SHALL NOT EXCEED 4' AND WHEN ELONGATION IS <50%, POST SPACING SHALL NOT EXCEED 6'.
4. WOVEN WIRE FENCE IS TO BE FASTENED SECURELY TO FENCE POSTS WITH WIRE TIES. FILTER CLOTH IS TO BE FASTENED SECURELY TO WOVEN WIRE FENCE WITH TIES SPACED EVERY 24" AT TOP AND MID SECTION.
5. WHEN TWO SECTIONS OF FILTER CLOTH ADJOIN EACH OTHER THEY SHALL BE OVER-LAPPED BY 6" AND FOLDED.
6. MAINTENANCE SHALL BE PERFORMED AS NEEDED AND MATERIAL REMOVED WHEN SEDIMENT REACHES HALF OF FABRIC HEIGHT.

ADAPTED FROM DETAILS PROVIDED BY: NEW YORK STATE DEC
ORIGINALLY DEVELOPED BY USDA-NRCS
VERMONT DEPARTMENT OF ENVIRONMENTAL CONSERVATION

SILT FENCE

NOTES:
REFER TO "THE VERMONT STANDARDS & SPECIFICATIONS FOR EROSION PREVENTION & SEDIMENT CONTROL -2006- " FROM THE VT AGENCY OF NATURAL RESOURCES FOR ADDITIONAL GUIDANCE.

THIS WORK SHALL BE PERFORMED IN ACCORDANCE WITH SECTION 649 AND AS SHOWN IN THE PLANS FOR GEOTEXTILE FOR SILT FENCE (PAY ITEM 649.51) OR GEOTEXTILE FOR SILT FENCE, WOVEN WIRE REINFORCED (PAY ITEM 649.515).

REVISIONS	
MARCH 21, 2008	WHF
DECEMBER 11, 2008	WHF
JANUARY 13, 2009	WHF

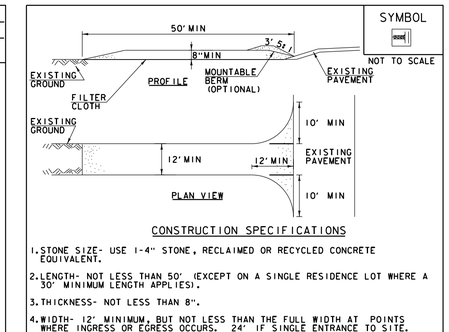

CONSTRUCTION SPECIFICATIONS

1. STONE SIZE- USE 1-4" STONE, RECLAIMED OR RECYCLED CONCRETE EQUIVALENT.
2. LENGTH- NOT LESS THAN 50' (EXCEPT ON A SINGLE RESIDENCE LOT WHERE A 30' MINIMUM LENGTH APPLIES).
3. THICKNESS- NOT LESS THAN 8".
4. WIDTH- 12' MINIMUM, BUT NOT LESS THAN THE FULL WIDTH AT POINTS WHERE INGRESS OR EGRESS OCCURS. 24' IF SINGLE ENTRANCE TO SITE.
5. GEOTEXTILE MUST BE PLACED OVER THE ENTIRE AREA PRIOR TO PLACING STONE.
6. SURFACE WATER- ALL SURFACE WATER FLOWING OR DIVERTED TOWARD CONSTRUCTION ENTRANCES SHALL BE PIPED BENEATH THE ENTRANCE. IF PIPING IS IMPRACTICAL, A MOUNTABLE BERM WITH 5:1 SLOPES WILL BE PERMITTED.
7. MAINTENANCE- THE ENTRANCE SHALL BE MAINTAINED IN A CONDITION WHICH WILL PREVENT TRACKING OR FLOWING OF SEDIMENT ONTO PUBLIC RIGHTS-OF-WAY, ALL SEDIMENT SPILLED, DROPPED, WASHED OR TRACKED ONTO PUBLIC RIGHTS-OF-WAY MUST BE REMOVED IMMEDIATELY.
8. WHEN WASHING IS REQUIRED, IT SHALL BE DONE ON AN AREA STABILIZED WITH STONE AND WHICH DRAINS INTO AN APPROVED SEDIMENT TRAPPING DEVICE.
9. PERIODIC INSPECTION AND NEEDED MAINTENANCE SHALL BE PROVIDED ACCORDING TO PERMIT REQUIREMENTS.

ADAPTED FROM DETAILS PROVIDED BY: NEW YORK STATE DEC
ORIGINALLY DEVELOPED BY USDA-NRCS
VERMONT DEPARTMENT OF ENVIRONMENTAL CONSERVATION

STABILIZED CONSTRUCTION ENTRANCE

NOTES:
REFER TO "THE VERMONT STANDARDS & SPECIFICATIONS FOR EROSION PREVENTION & SEDIMENT CONTROL -2006- " FROM THE VT AGENCY OF NATURAL RESOURCES FOR ADDITIONAL GUIDANCE.

THIS WORK SHALL BE PERFORMED IN ACCORDANCE WITH SECTION 653 FOR VEHICLE TRACKING PAD (PAY ITEM 653.35) OR AS SPECIFIED IN THE CONTRACT.

REVISIONS	
MARCH 24, 2008	WHF
JANUARY 13, 2009	WHF

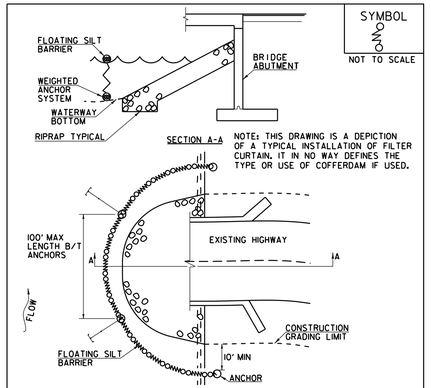

CONSTRUCTION SPECIFICATIONS

1. FILTER CURTAIN SHALL NOT BE PLACED ACROSS A FLOWING WATERWAY, OR IN A WATERWAY WITH STREAM VELOCITIES GREATER THAN 1.5 FEET/SECOND.
2. MAXIMUM 100' LENGTH BETWEEN ANCHORS.
3. LAST SECTION SHALL TERMINATE A MINIMUM OF 10' BEYOND LIMIT OF DISTURBANCE.
4. THE WEIGHTED ANCHOR SYSTEM SHALL BE A TYPE WHICH ALLOWS THE CURTAIN TO CONFORM TO THE BOTTOM OF THE WATERWAY.
5. THE CURTAIN SHALL BE REMOVED BY SLOWLY PULLING TOWARD THE SHORE MINIMIZING THE ESCAPE OF SEDIMENTS INTO WATERWAY.

FILTER CURTAIN

THIS WORK SHALL BE PERFORMED IN ACCORDANCE WITH SECTION 649 FOR GEOTEXTILE FOR FILTER CURTAIN (PAY ITEM 649.61).

REVISIONS	
APRIL 1, 2008	WHF
JANUARY 13, 2009	WHF
SEPTEMBER 4, 2009	WHF

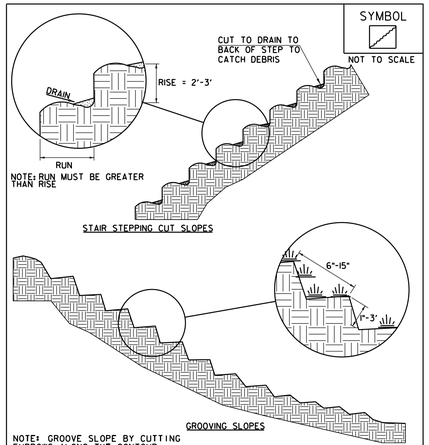

NOTE: GROOVE SLOPE BY CUTTING FURROWS ALONG THE CONTOUR. IRREGULARITIES IN THE SOIL SURFACE CATCH RAINWATER AND RETAIN LIME, FERTILIZER AND SEED.

ADAPTED FROM DETAILS PROVIDED BY: NEW YORK STATE DEC
ORIGINALLY DEVELOPED BY USDA-NRCS
VERMONT DEPARTMENT OF ENVIRONMENTAL CONSERVATION

SURFACE ROUGHENING

NOTES:
REFER TO "THE VERMONT STANDARDS & SPECIFICATIONS FOR EROSION PREVENTION & SEDIMENT CONTROL -2006- " FROM THE VT AGENCY OF NATURAL RESOURCES FOR ADDITIONAL GUIDANCE.

THIS WORK SHALL BE CONSIDERED INCIDENTAL TO THE CONTRACT

REVISIONS	
APRIL 1, 2008	WHF
JANUARY 13, 2009	WHF

VAOT LOW GROW/FINE FESCUE MIX

	LBS/AC					
WEIGHT	BROADCAST	HYDROSEED	NAME	LATIN NAME	GERM	PURITY
38%	57	95	CREEPING RED FESCUE	FESTUCA RUBRA VAR. RUBRA	90%	98%
29%	43.5	72.5	HARD FESCUE	FESTUCA LONGIFOLIA	85%	95%
15%	22.5	37.5	CHEWINGS FESCUE	FESTUCA RUBRA VAR. COMMUTATA	87%	95%
15%	22.5	37.5	ANNUAL RYEGRASS	LOLIUM MULTIFLORUM	90%	95%
3%	4.5	7.5	INERTS			
100%	150	250				

VAOT RURAL AREA MIX

	LBS/AC					
WEIGHT	BROADCAST	HYDROSEED	NAME	LATIN NAME	GERM	PURITY
37.5%	22.5	45	CREEPING RED FESCUE	FESTUCA RUBRA VAR. RUBRA	85%	98%
37.5%	22.5	45	TALL FESCUE	FESTUCA ARUNDINACEA	90%	95%
5.0%	3	6	RED TOP	AGROSTIS GIGANTEA	90%	95%
15.0%	9	18	WHITE FIELD CLOVER	TRIFOLIUM REPENS	85%	98%
5.0%	3	6	ANNUAL RYE GRASS	LOLIUM MULTIFLORUM	85%	95%
100%	60	120				

GENERAL AMENDMENT GUIDANCE

FERTILIZER	LIME	
10/20/10	AG LIME	PELLITIZED
500 LBS/AC	2 TONS/AC	1 TONS/AC

CONSTRUCTION GUIDANCE

1. SEED MIX: THE CONTRACTOR SHALL COORDINATE WITH THE RESIDENT ENGINEER ON WHICH SEED MIX TO USE.
2. SEED MIX: USE AS INDICATED IN THE PLANS AND/OR FOR ALL ESTABLISHED UPLAND (NON WETLAND) AREAS DISTURBED BY THE CONTRACTOR.
3. ALL SEED MIXTURES: SHALL NOT HAVE A WEED CONTENT EXCEEDING 0.40% BY WEIGHT AND SHALL BE FREE OF ALL NOXIOUS SEED.
4. FERTILIZER AND LIMESTONE: SHALL FOLLOW RATES SHOWN ON PLAN OR AS DIRECTED BY THE ENGINEER.
5. HAY MULCH: TO BE PLACED ON EARTH SLOPES AT THE RATE OF 2 TONS/ACRE, ACHIEVE 90% GROUND COVER OR AS DIRECTED BY THE ENGINEER.
6. HYDROSEEDING: ALTHOUGH GUIDANCE IS GIVEN ABOVE THE SITE CONDITIONS AND THE TYPE OF HYDROSEED PROPOSED FOR USE WILL ULTIMATELY DICTATE THE AMOUNTS AND TYPES OF SOIL AMENDMENTS TO BE APPLIED.
7. TURF ESTABLISHMENT: PLACING SEED, FERTILIZER, LIME AND MULCH PRIOR TO SEPTEMBER 15 AND AFTER APRIL 15 CAN BETTER ENSURE A VIGOROUS GROWTH OF GRASS.

ADAPTED FROM VTRANS TECHNICAL LANDSCAPE MANUAL FOR ROADWAYS AND TRANSPORTATION FACILITIES

TURF ESTABLISHMENT

THIS WORK SHALL BE PERFORMED IN ACCORDANCE WITH SECTION 651 FOR SEED (PAY ITEM 651.05)

REVISIONS	
JANUARY 12, 2015	WHF

PROJECT NAME: RICHMOND
PROJECT NUMBER: BF 0284 (28)

FILE NAME: sl3c070epscdetail.dgn
PROJECT LEADER: R. YOUNG
DESIGNED BY: S. COLEY
EPSC DETAILS

PLOT DATE: 16-JUN-2016
DRAWN BY: S. COLEY
CHECKED BY: W. LAMMER
SHEET 48 OF 51

1

METZGER, PATRICK D. &
POTTER-METZGER, MELODY

N 690853.66
E 1522184.68
267+25.00, 43.68' LT

MATCH LINE STA 268+75.00

MED.
ELM

EXISTING R.O.W. [702.7']
S84°6'52"E

66' R.O.W.

UT
US
TO

267+25
268+00

EXISTING R.O.W. [697.83']
N84°6'52"W

SIGN
"NO TRESPASSING"

AER E&T
UE(P)
AER E&T
UE(P)

N 690787.74
E 1522180.50
267+25.00, 22.37' RT

ARCH

BEGIN R.O.W. PROJECT
RICHMOND BF 0284 (28)
STA. 267+43.55, 38.76' RT

4

P & P SEPTIC SERVICE, INC.

I&M(P)

LINES SHOWN ON THIS PLAN AS EXISTING PROPERTY LINES P/L ARE BELIEVED TO BE ACCURATE BUT SHOULD NOT BE RELIED UPON FOR PURPOSES UNRELATED TO THE STATE OF VERMONT'S ACQUISITION OF LAND AND RIGHTS FOR THIS PROJECT.

FOR R.O.W. USE ONLY

PROJECT NAME: RICHMOND	
PROJECT NUMBER: BF 0284(28)	
FILE NAME: sl3c070rowlay.dgn	PLOT DATE: 16-JUN-2016
PROJECT LEADER: R. YOUNG	DRAWN BY: A. EGIZI
DESIGNED BY: W. LAMMER	CHECKED BY: R. CLOUTIER
R.O.W. LAYOUT SHEET 1 OF 2	SHEET 49 OF 51

COLD PLANING
BITUMINOUS PAVEMENT
STA. 269+00 - 269+50
STA. 274+00 - 274+50

REMOVAL AND DISPOSAL OF GUARDRAIL
STA. 271+09.17 - 271+74.76 RT
STA. 271+99.99 - 272+70.84 RT
STA. 30+15.12 - 30+82.48 RT
STA. 272+11.12 - 272+80.74 LT

REMOVAL OF EXISTING DELINEATOR
STA. 271+09.17 RT
STA. 272+70.84 RT

BITUMINOUS CONCRETE PAVEMENT
STA. 269+00 - 274+50
STA. 30+15 - 31+17

PRECAST REINFORCED CONCRETE
OR CAST-IN-PLACE CURB OPTION
STA. 271+33.52 - 271+73.49 RT
STA. 30+52.39 - 271+84.46 LT
STA. 272+02.29 - 272+42.42 RT
STA. 272+13.12 - 272+53.01 LT

18" OPTION PIPE
STA. 271+22.92 LT - 271+54.02 RT

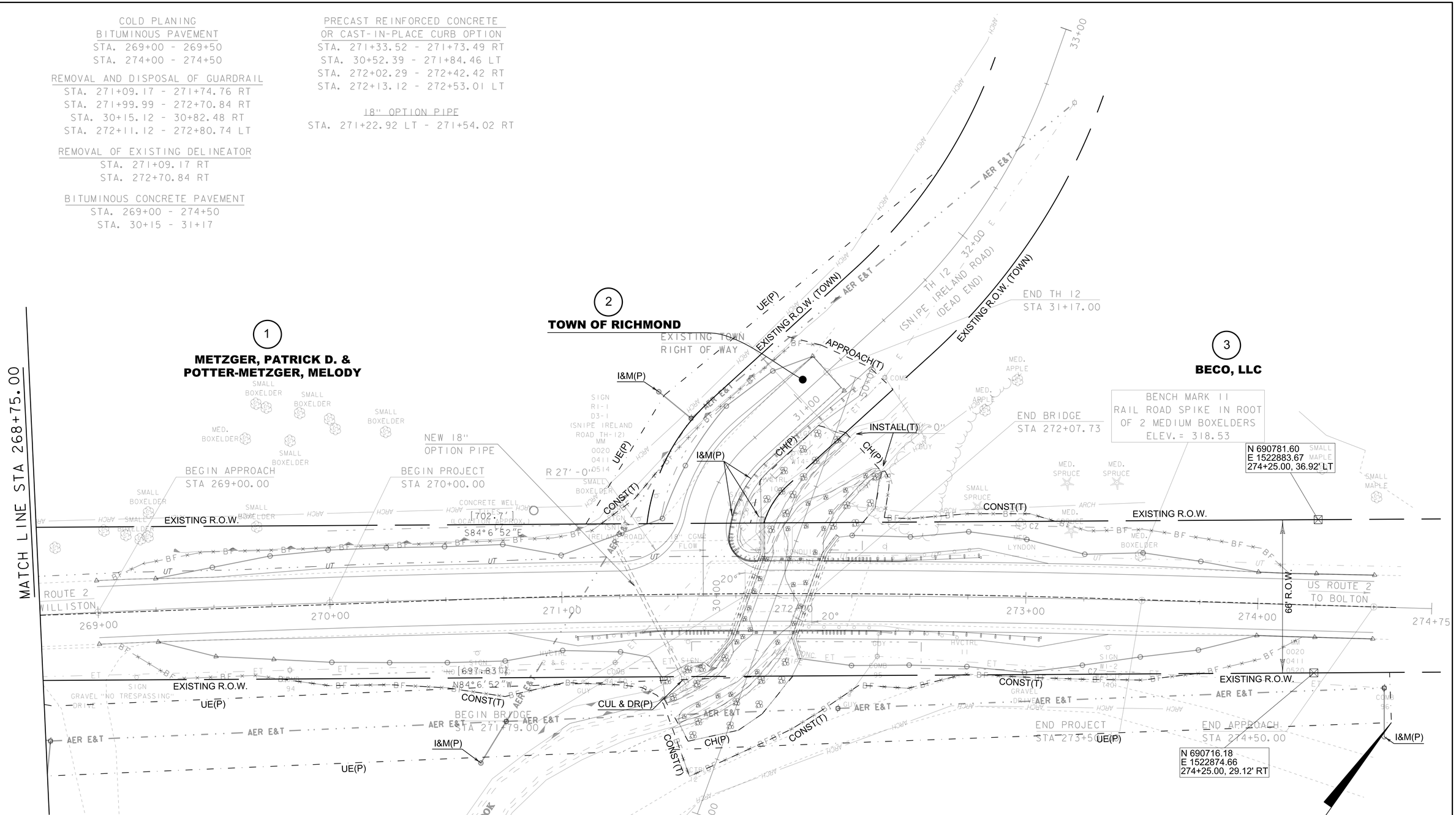

END R.O.W. PROJECT
RICHMOND BF 0284 (28)
STA. 274+59.03, 49.57' RT

EXISTING BRIDGE DATA
SINGLE SPAN CONCRETE T-BEAM
BUILT 1929
25' LONG, 27'-7" CURB TO CURB

FOR R.O.W. USE ONLY

LINES SHOWN ON THIS PLAN AS EXISTING PROPERTY LINES P/L ARE BELIEVED TO BE ACCURATE BUT SHOULD NOT BE RELIED UPON FOR PURPOSES UNRELATED TO THE STATE OF VERMONT'S ACQUISITION OF LAND AND RIGHTS FOR THIS PROJECT.

PROJECT NAME: RICHMOND
PROJECT NUMBER: BF 0284(28)

FILE NAME: s13c070rowlay.dgn
PROJECT LEADER: R. YOUNG
DESIGNED BY: W. LAMMER
R.O.W. LAYOUT SHEET 2 OF 2

PLOT DATE: 16-JUN-2016
DRAWN BY: A. EGIZI
CHECKED BY: R. CLOUTIER
SHEET 50 OF 51

STATE OF VERMONT
AGENCY OF TRANSPORTATION

RIGHT - OF - WAY DETAIL SHEET

TABLE OF PROPERTY ACQUISITION

PARCEL NO.	PROPERTY OWNER	ROW LAYOUT NO.	BEGINNING STATION	ENDING STATION	TAKE AREA±	REMAINDER AREA±	RIGHT TYPE	RIGHT T / P	RIGHT AREA ±	RECORDING DATA TITLE TAKEN	RECORDING DATA DATE	RECORDING DATA TOWN / CITY	RECORDING DATA BOOK	RECORDING DATA PAGE	REMARKS
1	METZGER, PATRICK D. &	2	271+10.77 LT	272+61.03 LT			UTILITY	P	2,547 SF						
	POTTER-METZGER, MELODY		271+17 LT	TH12 30+48 LT			CONSTRUCTION	T	197 SF						INCL. BF & EC
			271+43 LT	271+56 LT			INSTALL & MAINTAIN	P							GUY WIRE & ANCHOR
2	TOWN OF RICHMOND	2	271+37 LT	TH-12 31+33 RT			APPROACH	T	4,208 SF						INCL. BF & EC
			271+73 LT	TH-12 30+52 RT			INSTALL & MAINTAIN	P							CONCRETE CURB
			271+73 LT	TH-12 31+22 RT			INSTALL & MAINTAIN	P							GUARD RAIL & GUIDE POST
			271+81.36 LT	272+21.99 LT			CHANNEL	P	483 SF						INCL. STONE FILL
			271+85 LT	271+87 LT			INSTALL & MAINTAIN	P							WINGWALL
3	BECO, LLC	2	271+87.14 LT	272+37.53 LT			CHANNEL	P	1,199 SF						INCL. STONE FILL
			272+22 LT	272+27 LT			INSTALL	T							FILTER CURTAIN
			272+29.59 LT	273+12 LT			CONSTRUCTION	T	294 SF						INCL. BF & EC
			272+33 LT	272+40 LT			INSTALL	T							FILTER CURTAIN
4	P & P SEPTIC SERVICE, INC.	1, 2	267+43.55 RT	274+59.03 RT			UTILITY	P	0.45 A						19,706 SF±
			268+74 RT	268+77 RT			INSTALL & MAINTAIN	P							GUY WIRE & ANCHOR
			269+78 RT	272+73 RT			CONSTRUCTION	T	1,908 SF						INCL. BF & EC
			270+63 RT	270+75 RT			INSTALL & MAINTAIN	P							GUY WIRE & ANCHOR
			271+42.02 RT	271+99.68 RT			CHANNEL	P	1,065 SF						INCL. STONE FILL
			271+51 RT	271+55 RT			CULVERT & DRAIN	P							
			272+81 RT	273+75 RT			CONSTRUCTION	T	144 SF						INCL. BF & EC
			274+55 RT	274+56 RT			INSTALL & MAINTAIN	P							PUSH BRACE
5	GREEN MOUNTAIN POWER CORPORATION		267+43.55 RT	274+59.03 RT											UTILITY
6	WAITSFIELD AND CHAMPLAIN VALLEY		267+43.55 RT	274+59.03 RT											UTILITY
	TELECOM														
7	COMCAST OF CONNECTICUT/GEORGIA/		267+43.55 RT	274+59.03 RT											UTILITY
	MASSACHUSETTS/NEW HAMPSHIRE/														
	NEW YORK/NORTH CAROLINA/VIRGINIA/														
	VERMONT, LLC														
8	TELEPHONE OPERATING COMPANY		267+43.55 RT	274+59.03 RT											UTILITY
	OF VERMONT, LLC														

TABLE OF REVISIONS

REVISION NO.	ROW SET SHEET #	DESCRIPTION	DATE
1	3	PARCEL 4, P&P SEPTIC - ADD CULVERT & DRAIN(P) BEGIN STA. 271+51 RT AND END STA. 271+55 RT ON DETAIL SHEET. REV BY: MT CO 10085 APPR BY: RC	03/02/16

APPROVED: RYAN CLOUTIER DATE: 12-10-15
CHIEF, PLANS & TITLES

PROJECT NAME: **RICHMOND**
PROJECT NUMBER: **BF 0284(28)**

FILE NAME: **r13c070detail.xls**
PROJECT LEADER: **R. YOUNG**
DESIGNED BY: **A. EGIZI**
R.O.W. DETAIL SHEET

PLOT DATE: 16-JUN-2016
DRAWN BY: **M. TROTTIER**
CHECKED BY: **R. CLOUTIER**
SHEET 51 OF 51