REVIEWER NOTES

1. THE BRIDGE WILL BE CLOSED FOR ONE WEEKEND (FRIDAY 6PM-MONDAY 6AM). THERE WILL BE A SIGNED STATE DETOUR ROUTE
2. RIGHT-OF-WAY ACQUISITION WILL BE NECESSARY.
3. THERE ARE EXISTING OVERHEAD UTILITIES WITHIN THE PROJECT AREA WHICH WILL NOT BE RELOCATED. THE CONTRACTOR WILL BE REQUIRED TO WORK AROUND THEM.
4. THERE ARE EXISTING UNDERGROUND WATER AND GAS LINES WITHIN THE PROJECT AREA THAT WILL REQUIRE RELOCATION BY OTHERS. THE PROPOSED RELOCATION IS IS SHOWN ON THE UTILITY LAYOUT SHEET.
5. A SIMPLIFIED PAVEMENT DESIGN HAS BEEN COMPLETED FOR THIS PROJECT.
6. SD-540.10A, SD-540.10B AND SD-540.10C ARE PROPOSED STRUCTURES DETAILS

# STATE OF VERMONT
# AGENCY OF TRANSPORTATION

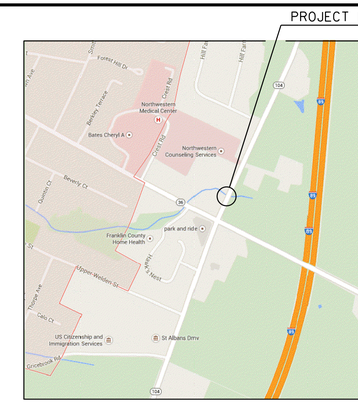


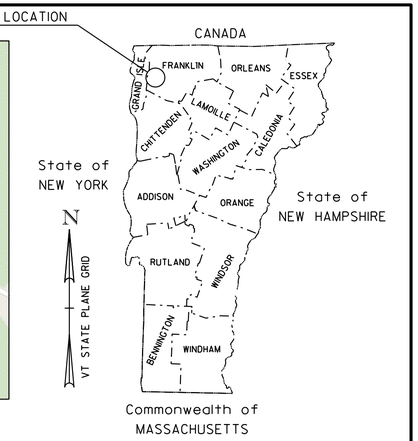


# PROPOSED IMPROVEMENT
# BRIDGE PROJECT

## TOWN OF ST. ALBANS
## COUNTY OF FRANKLIN

ROUTE NO : VT 104 (RURAL MAJOR COLLECTOR), CULVERT #19

PROJECT LOCATION : APPROXIMATELY 350 FT NORTH OF THE INTERSETIONS OF VT 36 AND VT 104.

PROJECT DESCRIPTION : REMOVAL OF EXISTING STRUCTURE AND REPLACEMENT WITH A NEW PRECAST STRUCTURE.

LENGTH OF STRUCTURE : 10.00
LENGTH OF ROADWAY : 90.00
LENGTH OF PROJECT : 100.00

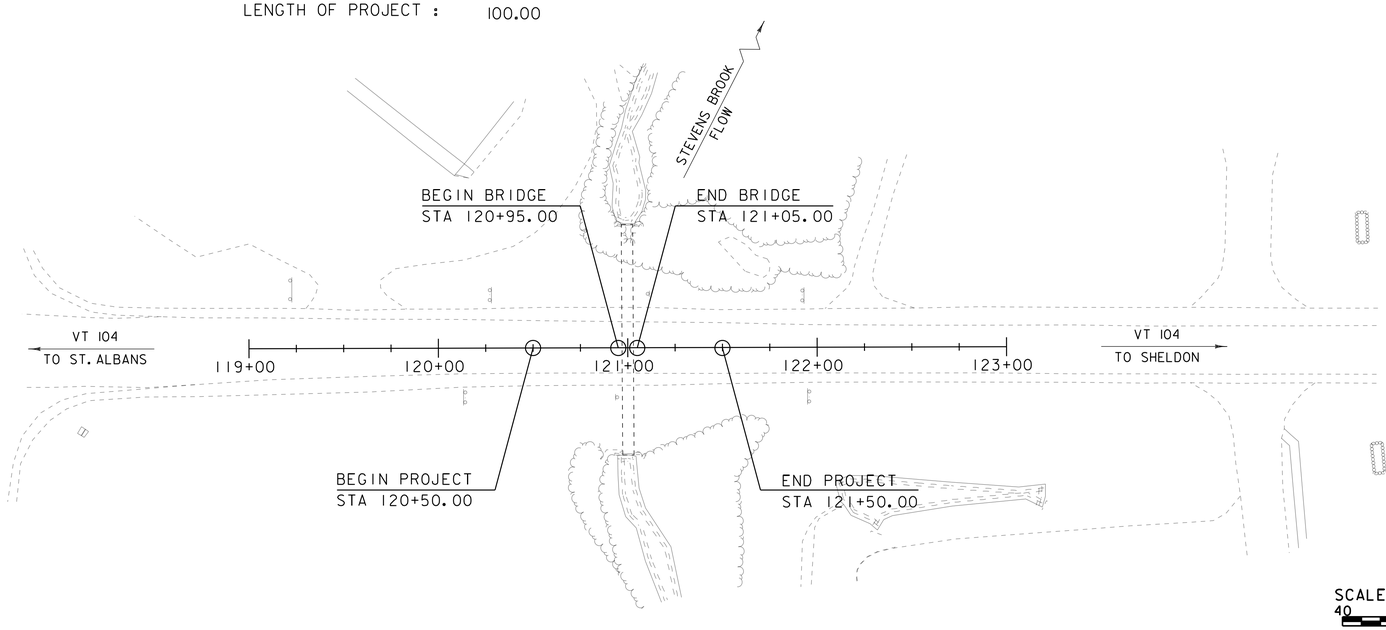


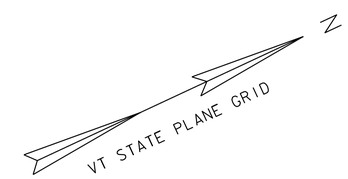


SCALE 1" = 40'-0"
40 0 40

CONSTRUCTION IS TO BE CARRIED ON IN ACCORDANCE WITH THESE PLANS AND THE STANDARD SPECIFICATIONS FOR CONSTRUCTION DATED 2011, AS APPROVED BY THE FEDERAL HIGHWAY ADMINISTRATION ON JULY 20, 2011 FOR USE ON THIS PROJECT, INCLUDING ALL SUBSEQUENT REVISIONS AND SUCH REVISED SPECIFICATIONS AND SPECIAL PROVISIONS AS ARE INCORPORATED IN THESE PLANS.

QUALITY ASSURANCE PROGRAM : LEVEL 2

SURVEYED BY : L. ORVIS, PC
SURVEYED DATE : 1-7-2015

DATUM
VERTICAL NAVD 88
HORIZONTAL NAD 83 (1992)

**PRELIMINARY PLANS**
**08-OCT-2015**

DIRECTOR OF PROJECT DELIVERY
APPROVED _____ DATE _____

PROJECT MANAGER : J.B. MCCARTHY

PROJECT NAME : ST. ALBANS TOWN
PROJECT NUMBER : BF 0279(5)

SHEET 1 OF 21 SHEETS

STATE OF VERMONT
AGENCY OF TRANSPORTATION

# PRELIMINARY INFORMATION SHEET (CULVERT)

Version
**LRFD**

## INDEX OF SHEETS

### PLAN SHEETS

| | |
|---|---|
| 1 | TITLE SHEET |
| 2 | PRELIMINARY INFORMATION SHEET |
| 3 | LEGEND SHEET |
| 4 | TIE SHEET |
| 5 | EXISTING CONDITIONS |
| 6 | LAYOUT SHEET |
| 7 | MAINLINE PROFILE |
| 8 | DETOUR PLAN |
| 9 | UTILITY RELOCATION PLAN |
| 10 | BORING INFORMATION SHEET |
| 11 | BORING LOGS |
| 12 - 14 | MAINLINE CROSS SECTIONS |
| 15 - 18 | CHANNEL CROSS SECTIONS |

### STRUCTURES DETAIL SHEETS

| | | |
|---|---|---|
| SD-501.00 | CONCRETE DETAILS AND NOTES | 5/7/2010 |
| SD-502.00 | CONCRETE DETAILS AND NOTES | 5/7/2010 |
| SD-540.10a | PRECAST BOX CULVERT TYPICAL SECTIONS | PENDING |
| SD-540.10b | PRECAST BOX CULVERT PLAN AND ELEVATION | PENDING |
| SD-540.10c | PRECAST BOX CULVERT END DETAILS | PENDING |

### STANDARDS LIST

## FINAL HYDRAULIC REPORT

### TRAFFIC MAINTENANCE NOTES

1. MAINTAIN TRAFFIC ON AN OFF SITE DETOUR.
2. TRAFFIC SIGNALS ARE NOT NECESSARY.
3. SIDEWALKS ARE NOT NECESSARY

### DESIGN VALUES

| | | | |
|---|---|---|---|
| 1. | DESIGN LIVE LOAD | | HL-93 |
| 2. | FUTURE PAVEMENT | $d_p$: | 3.0 INCH |
| 3. | CULVERT OPENING | $D$: | 0.00 FT |
| 4. | MIN. MID-SPAN POS. CAMBER @ RELEASE (PRESTRESSED UNITS) | $\Delta$: | - - - |
| 5. | PRESTRESSING STRAND | $f_y$: | - - - |
| 6. | PRESTRESSED CONCRETE STRENGTH | $f'_c$: | - - - |
| 7. | PRESTRESSED CONCRETE RELEASE STRENGTH | $f'_{ci}$: | - - - |
| 8. | CONCRETE, HIGH PERFORMANCE CLASS AA | $f'_c$: | 4.0 KSI |
| 9. | CONCRETE, HIGH PERFORMANCE CLASS A | $f'_c$: | 4.0 KSI |
| 10. | CONCRETE, HIGH PERFORMANCE CLASS B | $f'_c$: | 3.5 KSI |
| 11. | CONCRETE, CLASS C | $f'_c$: | 3.0 KSI |
| 12. | REINFORCING STEEL | $f_y$: | 60 KSI |
| 13. | STRUCTURAL STEEL AASHTO M270 | $f_y$: | - - - |
| 14. | NOMINAL BEARING RESISTANCE OF SOIL | $q_n$: | 4.0 KSF |
| 15. | SOIL BEARING RESISTANCE FACTOR (REFER TO AASHTO LRFD) | $\phi$: | - - - |
| 16. | NOMINAL BEARING RESISTANCE OF ROCK | $q_n$: | 10.0 KSF |
| 17. | ROCK BEARING RESISTANCE FACTOR (REFER TO AASHTO LRFD) | $\phi$: | - - - |
| 18. | PILE RESISTANCE FACTOR | $\phi$: | - - - |
| 19. | LATERAL PILE DEFLECTION | $\Delta$: | - - - |
| 20. | BASIC WIND SPEED | $V_{3s}$: | - - - |
| 21. | MINIMUM GROUND SNOW LOAD | $p_g$: | - - - |
| 22. | SEISMIC DATA $PGA$: 0 | $S_s$: | - - - |
| | | $S_1$: | - - - |
| 23. | | | |
| 24. | | | - - - |
| 25. | | | - - - |
| 26. | | | - - - |

### LRFR LOAD RATING FACTORS

| LOADING LEVELS | TRUCK | | | | | | |
|---|---|---|---|---|---|---|---|
| | H-20 | HL-93 | 3S2 | 6 AXLE | 3A STR. | 4A STR. | 5A SEMI |
| TONNAGE | 20 | 36 | 36 | 66 | 30 | 34.5 | 38 |
| INVENTORY | | | | | | | |
| POSTING | | | | | | | |
| OPERATING | | | | | | | |

COMMENTS: TABLE TO BE COMPLETED BY CONTRACTOR'S DESIGNER

### AS BUILT "REBAR" DETAIL

| LEVEL I | LEVEL II | LEVEL III |
|---|---|---|
| TYPE: | TYPE: | TYPE: |
| GRADE: | GRADE: | GRADE: |

### CULVERT DESIGN CRITERIA

1. PROPOSED CULVERT IS A PRECAST CONCRETE STRUCTURE (10'-0" x 7'-0" x 90'-0" BOX)
2. CULVERT ENDS ARE SKEWED BY AN ANGLE OF 90°
3. CULVERT WILL BE SET AT A SLOPE OF 27.00 IN. ON 90 FT.
4. CULVERT WILL REQUIRE FISH PASSAGE ACCOMODATIONS
5. CULVERT CONSTRUCTION WILL REQUIRE A TEMPORARY PIPE

### TRAFFIC DATA

| YEAR | ADT | DHV | % D | % T | ADTT |
|---|---|---|---|---|---|
| 2014 | 6700 | 760 | 64 | 5.2 | 380 |
| 2034 | 6900 | 780 | 64 | 7.2 | 540 |

20 year ESAL for flexible pavement from 2014 to 2034 : 2541000

40 year ESAL for flexible pavement from 2014 to 2054 : 5.631.00

Design Speed : 40 mph

PROJECT NAME: **ST. ALBANS**

PROJECT NUMBER: **BF 0279(5)**

FILE NAME: **s12c598PI.DGN**
PROJECT LEADER: **J.B. MCCARTHY**
DESIGNED BY: **J. SALVATORI**
**PRELIMINARY INFORMATION SHEET 1**

PLOT DATE: 10/8/2015
DRAWN BY: **J. SALVATORI**
CHECKED BY:

## GENERAL INFORMATION

### SYMBOLOGY LEGEND NOTE

THE SYMBOLOGY ON THIS SHEET IS INTENDED TO COVER STANDARD CONVENTIONAL SYMBOLOGY. THE SYMBOLOGY IS USED FOR EXISTING & PROPOSED FEATURES WITH HEAVIER LINEWEIGHT, IN COMBINATION WITH PROJECT ANNOTATION, AS NOTED ON PROJECT PLAN SHEETS. THIS LEGEND SHEET COVERS THE BASICS. SYMBOLOGY ON PLANS MAY VARY, PLAN ANNOTATIONS AND NOTES SHOULD BE USED TO CLARIFY AS NEEDED.

## R.O.W. ABBREVIATIONS (CODES) & SYMBOLS

| POINT | CODE | DESCRIPTION |
|---|---|---|
| | CH | CHANNEL EASEMENT |
| | CONST | CONSTRUCTION EASEMENT |
| | CUL | CULVERT EASEMENT |
| | D&C | DISCONNECT & CONNECT |
| | DIT | DITCH EASEMENT |
| | DR | DRAINAGE EASEMENT |
| | DRIVE | DRIVEWAY EASEMENT |
| | EC | EROSION CONTROL |
| | HWY | HIGHWAY EASEMENT |
| | I&M | INSTALL & MAINTAIN EASEMENT |
| | LAND | LANDSCAPE EASEMENT |
| | R&RES | REMOVE & RESET |
| | R&REP | REMOVE & REPLACE |
| | SR | SLOPE RIGHT |
| | UE | UTILITY EASEMENT |
| | (P) | PERMANENT EASEMENT |
| | (T) | TEMPORARY EASEMENT |
| ■ | BNDNS | BOUND SET |
| ▣ | BNDNS | BOUND TO BE SET |
| ● | IPNS | IRON PIN SET |
| ◎ | IPNS | IRON PIN TO BE SET |
| ⊠ | CALC | EXISTING ROW POINT |
| ○ | PROW | PROPOSED ROW POINT |
| [LENGTH] | | LENGTH CARRIED ON NEXT SHEET |

## COMMON TOPOGRAPHIC POINT SYMBOLS

| POINT | CODE | DESCRIPTION |
|---|---|---|
| | APL | BOUND APPARENT LOCATION |
| | BM | BENCHMARK |
| | BND | BOUND |
| | CB | CATCH BASIN |
| | COMB | COMBINATION POLE |
| | DITHR | DROP INLET THROATED DNC |
| | EL | ELECTRIC POWER POLE |
| | FPOLE | FLAGPOLE |
| | GASFIL | GAS FILLER |
| | GP | GUIDE POST |
| | GSO | GAS SHUT OFF |
| | GUY | GUY POLE |
| | GUYW | GUY WIRE |
| | GV | GATE VALUE |
| | H | TREE HARDWOOD |
| | HCTRL | CONTROL HORIZONTAL |
| | HVCTRL | CONTROL HORIZ. & VERTICAL |
| | HYD | HYDRANT |
| | IP | IRON PIN |
| | IPIPE | IRON PIPE |
| | LI | LIGHT - STREET OR YARD |
| | MB | MAILBOX |
| | MH | MANHOLE (MH) |
| | MM | MILE MARKER |
| | PM | PARKING METER |
| | PMK | PROJECT MARKER |
| | POST | POST STONE/WOOD |
| | RRSIG | RAILROAD SIGNAL |
| | RRSL | RAILROAD SWITCH LEVER |
| | S | TREE SOFTWOOD |
| | SAT | SATELLITE DISH |
| | SHRUB | SHRUB |
| | SIGN | SIGN |
| | STUMP | STUMP |
| | TEL | TELEPHONE POLE |
| | TIE | TIE |
| | TSIGN | SIGN W/DOUBLE POST |
| | VCTRL | CONTROL VERTICAL |
| | WELL | WELL |
| | WSO | WATER SHUT OFF |

THESE ARE COMMON VAOT SURVEY POINT SYMBOLS FOR EXISTING FEATURES, ALSO USED FOR PROPOSED FEATURES WITH HEAVIER LINEWEIGHT, IN COMBINATION WITH PROPOSED ANNOTATION.

## PROPOSED GEOMETRY CODES

| CODE | DESCRIPTION |
|---|---|
| PC | POINT OF CURVATURE |
| PI | POINT OF INTERSECTION |
| CC | CENTER OF CURVE |
| PT | POINT OF TANGENCY |
| PCC | POINT OF COMPOUND CURVE |
| PRC | POINT OF REVERSE CURVE |
| POB | POINT OF BEGINNING |
| POE | POINT OF ENDING |
| STA | STATION PREFIX |
| AH | AHEAD STATION SUFFIX |
| BK | BACK STATION SUFFIX |
| D | CURVE DEGREE OF (100FT) |
| R | CURVE RADUIS OF |
| T | CURVE TANGENT LENGTH |
| L | CURVE LENGTH OF |
| E | CURVE EXTERNAL DISTANCE |

## UTILITY SYMBOLOGY

### UNDERGROUND UTILITIES

| | |
|---|---|
| | UTILITY (GENERIC-UNKNOWN) |
| UT | TELEPHONE |
| UE | ELECTRIC |
| UC | CABLE (TV) |
| UEC | ELECTRIC+CABLE |
| UET | ELECTRIC+TELEPHONE |
| UCT | CABLE+TELEPHONE |
| UECT | ELECTRIC+CABLE+TELEP. |
| G | GAS LINE |
| W | WATER LINE |
| S | SANITARY SEWER (SEPTIC) |

### ABOVE GROUND UTILITIES (AERIAL)

| | |
|---|---|
| | UTILITY (GENERIC-UNKNOWN) |
| T | TELEPHONE |
| E | ELECTRIC |
| C | CABLE (TV) |
| EC | ELECTRIC+CABLE |
| ET | ELECTRIC+TELEPHONE |
| AER E&T | ELECTRIC+TELEPHONE |
| CT | CABLE+TELEPHONE |
| ECT | ELECTRIC+CABLE+TELEP. |
| | UTILITY POLE GUY WIRE |

## PROJECT CONSTRUCTION SYMBOLOGY

### PROJECT DESIGN & LAYOUT SYMBOLOGY

| | |
|---|---|
| CZ | CLEAR ZONE |
| | PLAN LAYOUT MATCHLINE |

### PROJECT CONSTRUCTION FEATURES

| | |
|---|---|
| | TOP OF CUT SLOPE |
| | TOE OF FILL SLOPE |
| | STONE FILL |
| | BOTTOM OF DITCH ℄ |
| | CULVERT PROPOSED |
| | STRUCTURE SUBSURFACE |
| PDF | PROJECT DEMARCATION FENCE |
| BF | BARRIER FENCE |
| | TREE PROTECTION ZONE (TPZ) |
| | STRIPING LINE REMOVAL |
| | SHEET PILES |

## CONVENTIONAL BOUNDARY SYMBOLOGY

### BOUNDARY LINES

| | |
|---|---|
| TOWN LINE | TOWN BOUNDARY LINE |
| COUNTY LINE | COUNTY BOUNDARY LINE |
| STATE LINE | STATE BOUNDARY LINE |
| | PROPOSED STATE R.O.W. (LIMITED ACCESS) |
| | PROPOSED STATE R.O.W. |
| | STATE ROW (LIMITED ACCESS) |
| | STATE ROW |
| | TOWN ROW |
| | PERMANENT EASEMENT LINE (P) |
| | TEMPORARY EASEMENT LINE (T) |
| | SURVEY LINE |
| P/L | PROPERTY LINE (P/L) |
| SR | SLOPE RIGHTS |
| 6f | 6F PROPERTY BOUNDARY |
| 4f | 4F PROPERTY BOUNDARY |
| HAZ | HAZARDOUS WASTE |

## EPSC LAYOUT PLAN SYMBOLOGY

### EPSC MEASURES

| | |
|---|---|
| | FILTER CURTAIN |
| | SILT FENCE |
| | SILT FENCE WOVEN WIRE |
| | CHECK DAM |
| | DISTURBED AREAS REQUIRING RE-VEGETATION |
| | EROSION MATTING |

SEE EPSC DETAIL SHEETS FOR ADDITIONAL SYMBOLOGY

### ENVIRONMENTAL RESOURCES

| | |
|---|---|
| | WETLAND BOUNDARY |
| | RIPARIAN BUFFER ZONE |
| | WETLAND BUFFER ZONE |
| | SOIL TYPE BOUNDARY |
| T&E | THREATENED & ENDANGERED SPECIES |
| HAZ | HAZARDOUS WASTE AREA |
| AG | AGRICULTURAL LAND |
| HABITAT | FISH & WILDLIFE HABITAT |
| FLOOD PLAIN | FLOOD PLAIN |
| OHW | ORDINARY HIGH WATER (OHW) |
| | STORM WATER |
| | USDA FOREST SERVICE LANDS |
| | WILDLIFE HABITAT SUIT/CONN |

### ARCHEOLOGICAL & HISTORIC

| | |
|---|---|
| ARCH | ARCHEOLOGICAL BOUNDARY |
| HISTORIC DIST | HISTORIC DISTRICT BOUNDARY |
| HISTORIC | HISTORIC AREA |
| H | HISTORIC STRUCTURE |

## CONVENTIONAL TOPOGRAPHIC SYMBOLOGY

### EXISTING FEATURES

| | |
|---|---|
| | ROAD EDGE PAVEMENT |
| | ROAD EDGE GRAVEL |
| | DRIVEWAY EDGE |
| | DITCH |
| | FOUNDATION |
| | FENCE (EXISTING) |
| | FENCE WOOD POST |
| | FENCE STEEL POST |
| | GARDEN |
| | ROAD GUARDRAIL |
| | RAILROAD TRACKS |
| | CULVERT (EXISTING) |
| | STONE WALL |
| | WALL |
| | WOOD LINE |
| | BRUSH LINE |
| | HEDGE |
| | BODY OF WATER EDGE |
| | LEDGE EXPOSED |

PROJECT NAME: ST. ALBANS TOWN
PROJECT NUMBER: BF 0279(5)

FILE NAME: s12c598legend.dgn
PROJECT LEADER: JB MCCARTHY
DESIGNED BY: J. SALVATORI
LEGEND SHEET

PLOT DATE: 08-OCT-2015
DRAWN BY: J. SALVATORI
CHECKED BY:
SHEET 3 OF 21

## GPS CONTROL POINTS

FAFASTA 1

NORTH = 824454.5256
EAST = 1490671.2570
ELEV. = 603.3550

GENERAL LOCATION, FAIRFAX, VT. TO REACH FROM THE I-89 SOUTHBOUND BRIDGE OVER THE ACCESS ROAD AT EXIT 19 IN ST ALBANS GO SOUTH ALONG I-89 SOUTHBOUND FOR 2.4 MI (3.9 KM) TO THE SOUTH END OF THE I-89 SOUTHBOUND BRIDGE OVER VT ROUTE 104 AND THE SITE OF THE MARK ON THE LEFT IN THE MEDIAN. THE MARK IS A CENTERPUNCHED REBAR DRIVEN FLUSH WITH GROUND SURFACE. IT IS 8.1 M (26.6 FT) SOUTHEAST OF THE SOUTHEAST CORNER OF THE SOUTHBOUND BRIDGE ABUTMENT, 6.4 M (21.0 FT) WEST OF THE SOUTHWEST CORNER OF THE NORTHBOUND BRIDGE ABUTMENT, 1.7 M (5.6 FT) SOUTH OF THE SOUTH FACE OF THE GUARD RAIL, AND 0.3 M (1.0 FT) SOUTH OF A FIBERGLASS WITNESS POST.

FAFASTA 2

NORTH = 822766.3039
EAST = 1490357.1370
ELEV. = 624.1130

GENERAL LOCATION, FAIRFAX, VT. TO REACH FROM THE I-89 SOUTHBOUND BRIDGE OVER THE ACCESS ROAD AT EXIT 19 IN ST ALBANS GO SOUTH ALONG I-89 SOUTHBOUND FOR 2.8 MI (4.5 KM) TO THE SOUTHBOUND REST AREA ON THE RIGHT AND THE MARK ON THE RIGHT IN A GRASS AREA BETWEEN THE REST AREA AND THE SOUTHBOUND LANE. THE MARK IS A DRILL HOLE IN THE TOP OF THE NORTH END OF A CONCRETE DROP INLET TOP. IT IS 3.8 M (12.5 FT) WEST OF AND ABOUT 1 M (3.3 FT) LOWER THAN THE WEST EDGE OF PAVEMENT OF THE SOUTHBOUND LANE, 28.2 M (92.5 FT) NORTH OF MILE MARKER 110.95, 18.4 M (60.4 FT) EAST OF A 15 CM MAPLE, AND 0.4 M (1.3 FT) EAST OF A FIBERGLASS WITNESS POST.

*GPS CONTROL PROVIDED BY VT GSU 2014

## TRAVERSE TIES

### HVCTRL #33

NORTH = 841355.2260
EAST = 1493098.8270
ELEV. = 569.3340

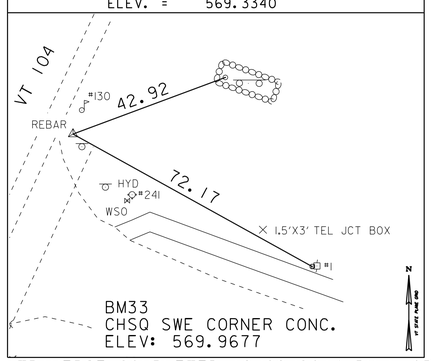


### HVCTRL #34

NORTH = 840823.7600
EAST = 1492781.5470
ELEV. = 567.3840

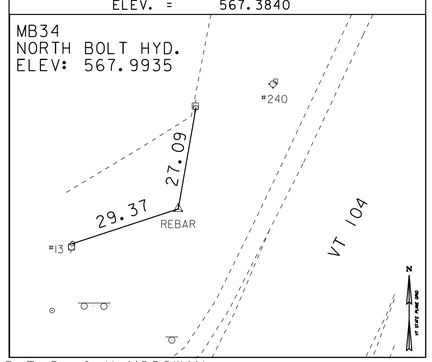


### HVCRTL #

NORTH =
EAST =
ELEV. =

NORTH =
EAST =
ELEV. =

NORTH =
EAST =
ELEV. =

*TRAVERSE COMPLETED 12/02/2014 BY L.ORVIS P.C. & H.MCGOWAN

## ALIGNMENT TIES

NORTH =
EAST =
ELEV. =

NORTH =
EAST =
ELEV. =

NORTH =
EAST =
ELEV. =

NORTH =
EAST =
ELEV. =

NORTH =
EAST =
ELEV. =

DATUM

VERTICAL NAVD 88
HORIZONTAL NAD 83 (1992)
ADJUSTMENT COMPASS

PROJECT NAME: ST. ALBANS
PROJECT NUMBER: BF 0279 (5)

FILE NAME: X12C598T1.DGN
PROJECT LEADER: J.B. McCARTHY
DESIGNED BY: VTRANS
TIE SHEET 1

PLOT DATE: 08-OCT-2015
DRAWN BY: G. HITCHCOCK
CHECKED BY: P. BEYOR
SHEET 4 OF 21

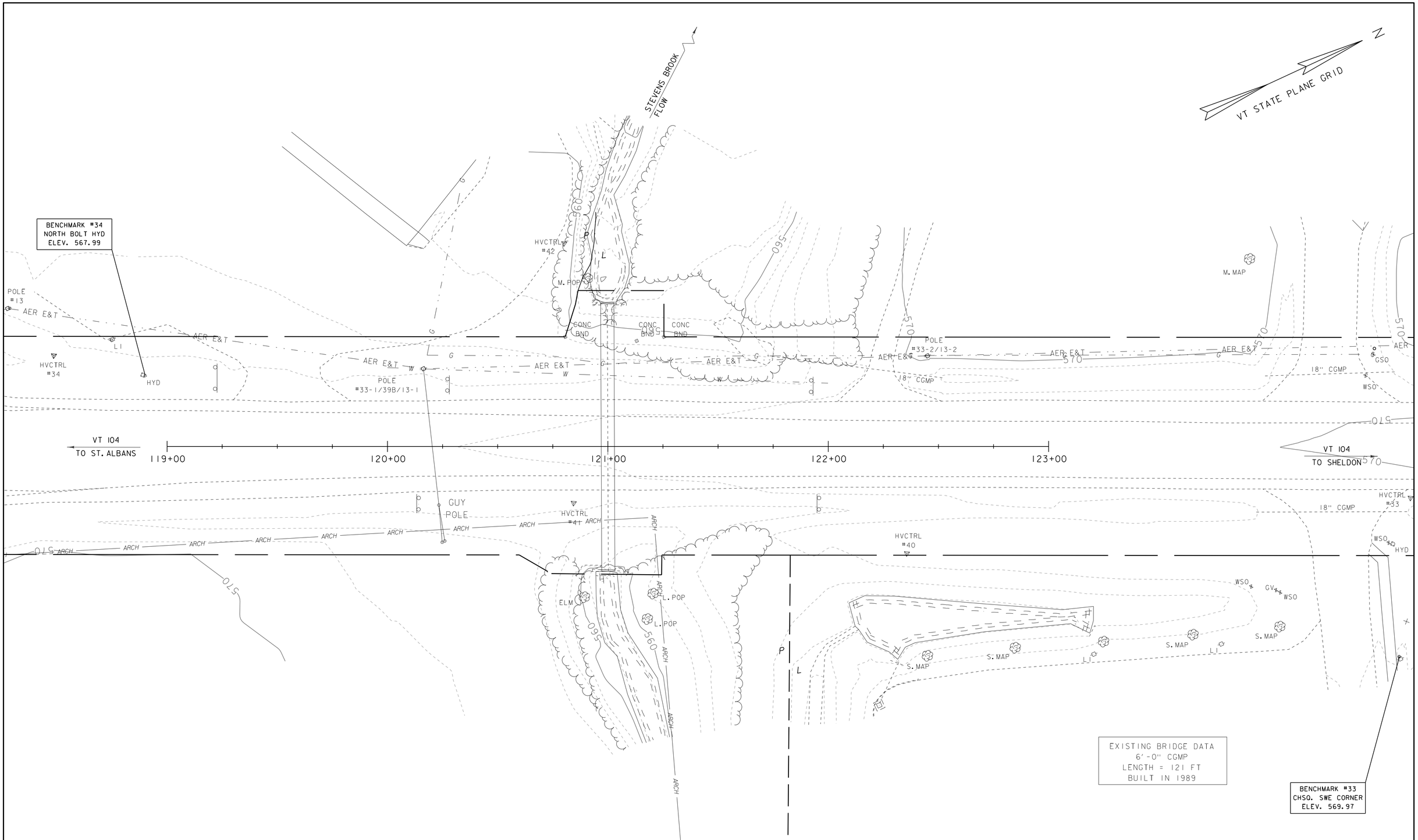


# EXISTING CONDITIONS

SCALE 1" = 20'-0"

20 0 20

| | |
|---|---|
| PROJECT NAME: ST. ALBANS TOWN | |
| PROJECT NUMBER: BF 0279(5) | |
| FILE NAME: s12c598bdr_ex.dgn | PLOT DATE: 08-OCT-2015 |
| PROJECT LEADER: J.B. MCCARTHY | DRAWN BY: J. SALVATORI |
| DESIGNED BY: J. SALVATORI | CHECKED BY: ------ |
| EXISTING CONDITIONS | SHEET 5 OF 21 |

4 INCH WHITE LINE
STA 120+00.00 - 122+00.00 LT/RT

4 INCH WHITE LINE (DASHED)
STA 120+00.00 - 120+50.00 LT

4 INCH YELLOW LINE
STA 120+00.00 - 122+00.00 CL

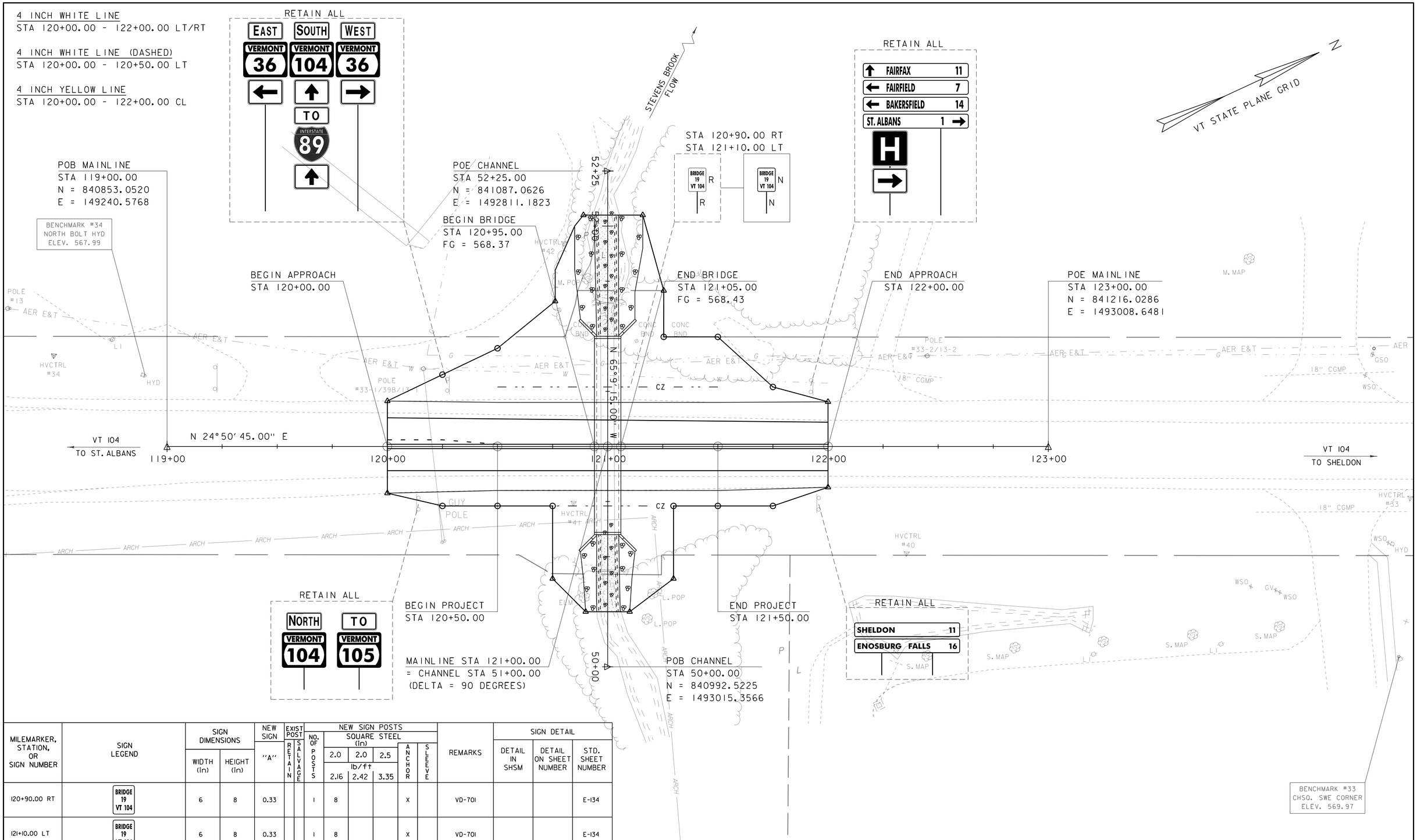


| MILEMARKER, STATION, OR SIGN NUMBER | SIGN LEGEND | SIGN DIMENSIONS WIDTH (in) | SIGN DIMENSIONS HEIGHT (in) | NEW SIGN "A" | EXIST POST RETAIN | EXIST POST SALVAGE | NEW SIGN POSTS NO. OF POSTS | SQUARE STEEL (in) 2.0 lb/ft 2.16 | 2.0 lb/ft 2.42 | 2.5 lb/ft 3.35 | ANCHOR | SLEEVE | REMARKS | SIGN DETAIL DETAIL IN SHSM | DETAIL ON SHEET NUMBER | STD. SHEET NUMBER |
|---|---|---|---|---|---|---|---|---|---|---|---|---|---|---|---|---|
| 120+90.00 RT | BRIDGE 19 VT 104 | 6 | 8 | 0.33 | | | 1 | 8 | | | X | | VD-701 | | | E-134 |
| 121+10.00 LT | BRIDGE 19 VT 104 | 6 | 8 | 0.33 | | | 1 | 8 | | | X | | VD-701 | | | E-134 |
| | | | | | | | | FT | FT 16 | FT | | EA | | | | |
| TOTALS | | | | SF 0.66 | | | | FT 16 | | | | | | | | |

FINAL POST LENGTHS ARE TO BE DETERMINED IN THE FIELD. POST SIZES ARE COMPUTED BASED ON INFORMATION FURNISHED ON THE STANDARD SHEETS AND THE VTRANS "SIGN POST DESIGN GUIDELINE."

SIGN LEGEND
N = NEW
R = REMOVE
S = SALVAGE
RET = RETAIN

SHSM = STANDARD HIGHWAY SIGNS AND MARKINGS (MUTCD) (APPROVED BY THE FHWA)

# LAYOUT SHEET

SCALE 1" = 20'-0"
20 0 20

NOTE:
ADJUST NEW CENTERLINE AND EDGE LINES TO MATCH EXISTING LINES AT BEGIN/END APPROACH

PROJECT NAME: ST. ALBANS TOWN
PROJECT NUMBER: BF 0279(5)

FILE NAME: s12c598bdr.dgn
PROJECT LEADER: J.B. MCCARTHY
DESIGNED BY: J. SALVATORI
LAYOUT SHEET

PLOT DATE: 08-OCT-2015
DRAWN BY: J. SALVATORI
CHECKED BY: ------
SHEET 6 OF 21

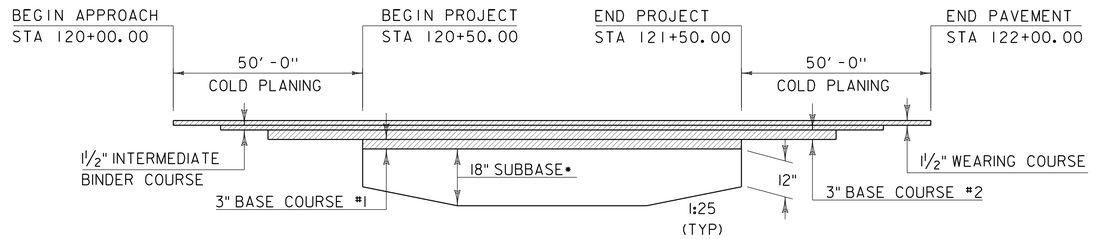


## MATERIAL TRANSITION

HOR. SCALE 1" = 20'-0"
NO VER. SCALE

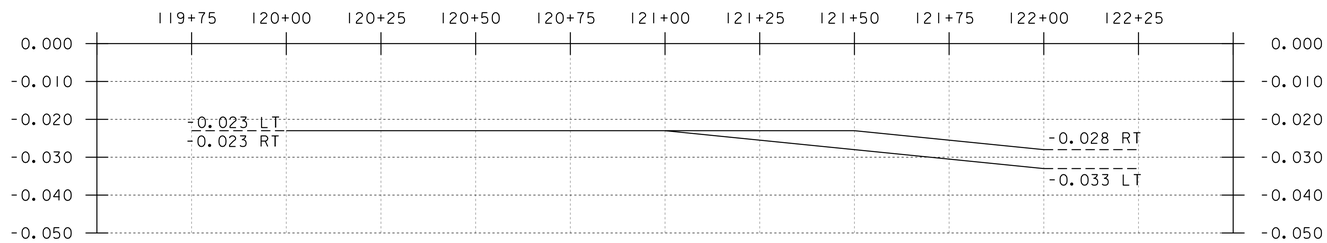


## BANKING DIAGRAM

HOR. SCALE 1" = 20'-0"
NO VER. SCALE

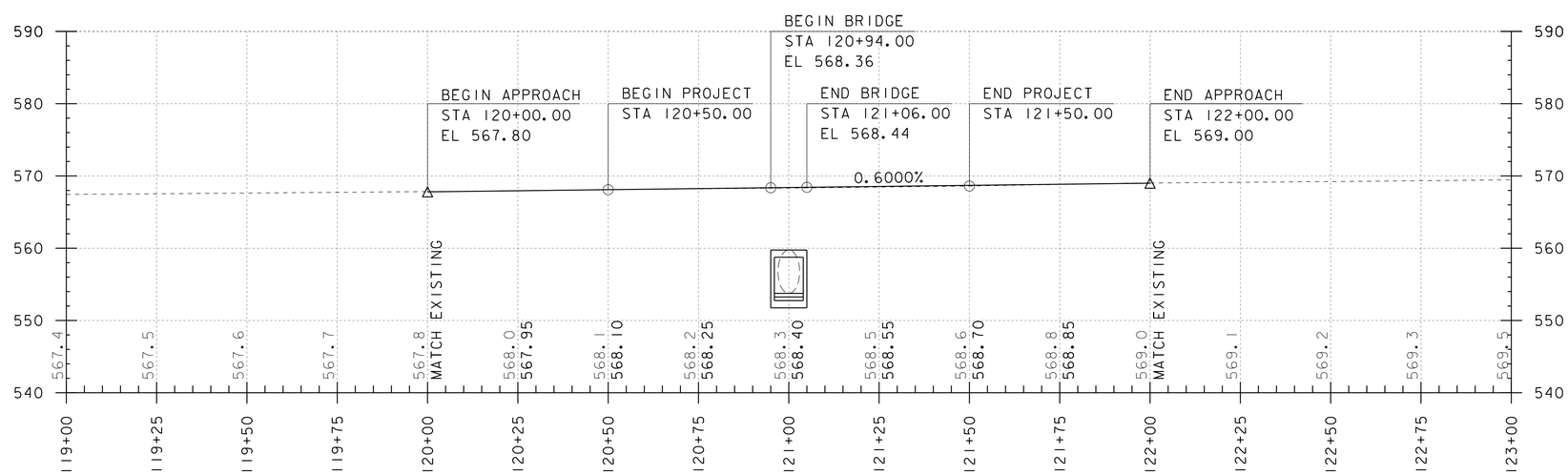


## MAINLINE PROFILE

HOR. SCALE 1" = 20'-0"
VER. SCALE 1" = 10'-0"

THE GRADES SHOWN TO THE NEAREST TENTH ARE THE ORIGINAL GROUND ELEVATIONS ALONG THE PROPOSED ALIGNMENT.

THE GRADES SHOWN TO THE NEAREST HUNDREDTH ARE THE FINISH GRADES ALONG THE PROPOSED ALIGNMENT.

| | |
|---|---|
| PROJECT NAME: ST. ALBANS TOWN | |
| PROJECT NUMBER: BF 0279(5) | |
| FILE NAME: sl2c598pro.dgn | PLOT DATE: 08-OCT-2015 |
| PROJECT LEADER: J.B. MCCARTHY | DRAWN BY: J. SALVATORI |
| DESIGNED BY: J. SALVATORI | CHECKED BY: ------ |
| MAINLINE PROFILE | SHEET 7 OF 21 |

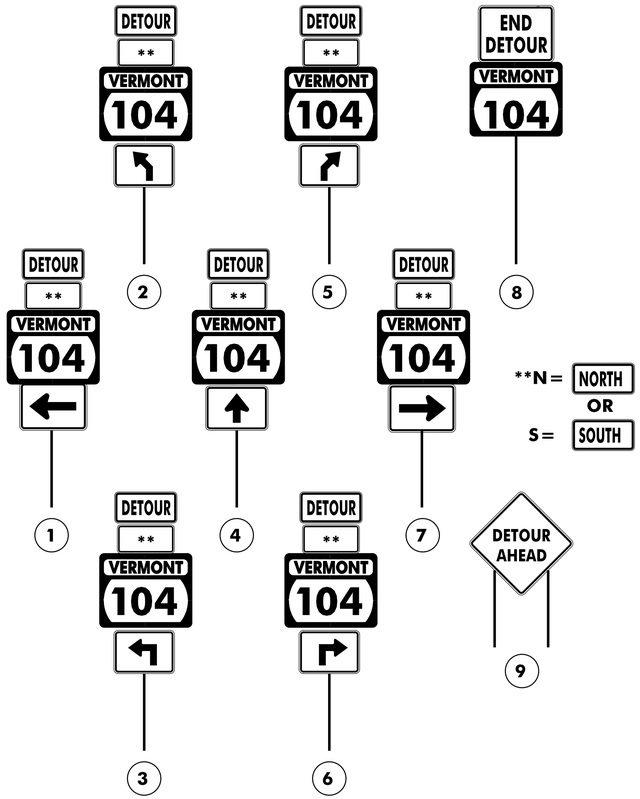

| | | | | | | |
|---|---|---|---|---|---|---|
| V | T | | 1 | 0 | 4 | |
| C | L | O | S | E | D | |
| | | | | | | |

PHASE 1

| | | | | | | |
|---|---|---|---|---|---|---|
| B | E | T | W | E | E | N |
| V | T | | 3 | 6 | – | |
| V | T | | 1 | 0 | 5 | |

PHASE 2

| | | | | | | | |
|---|---|---|---|---|---|---|---|
| * | F | R | I | | M | / | D D |
| * | 6 | P | M | – | | M | O N |
| | M | / | D | D | | 6 | A M |

PHASE 3

* M=MONTH
D=DAY

S–1

| | | | | | | |
|---|---|---|---|---|---|---|
| R | O | A | D | | | |
| C | L | O | S | E | D | |
| | | | | | | |

PHASE 1

| | | | | | | | |
|---|---|---|---|---|---|---|---|
| * | F | R | I | | M | / | D D |
| * | 6 | P | M | – | | M | O N |
| | M | / | D | D | | 6 | A M |

PHASE 2

* M=MONTH
D=DAY

S–2

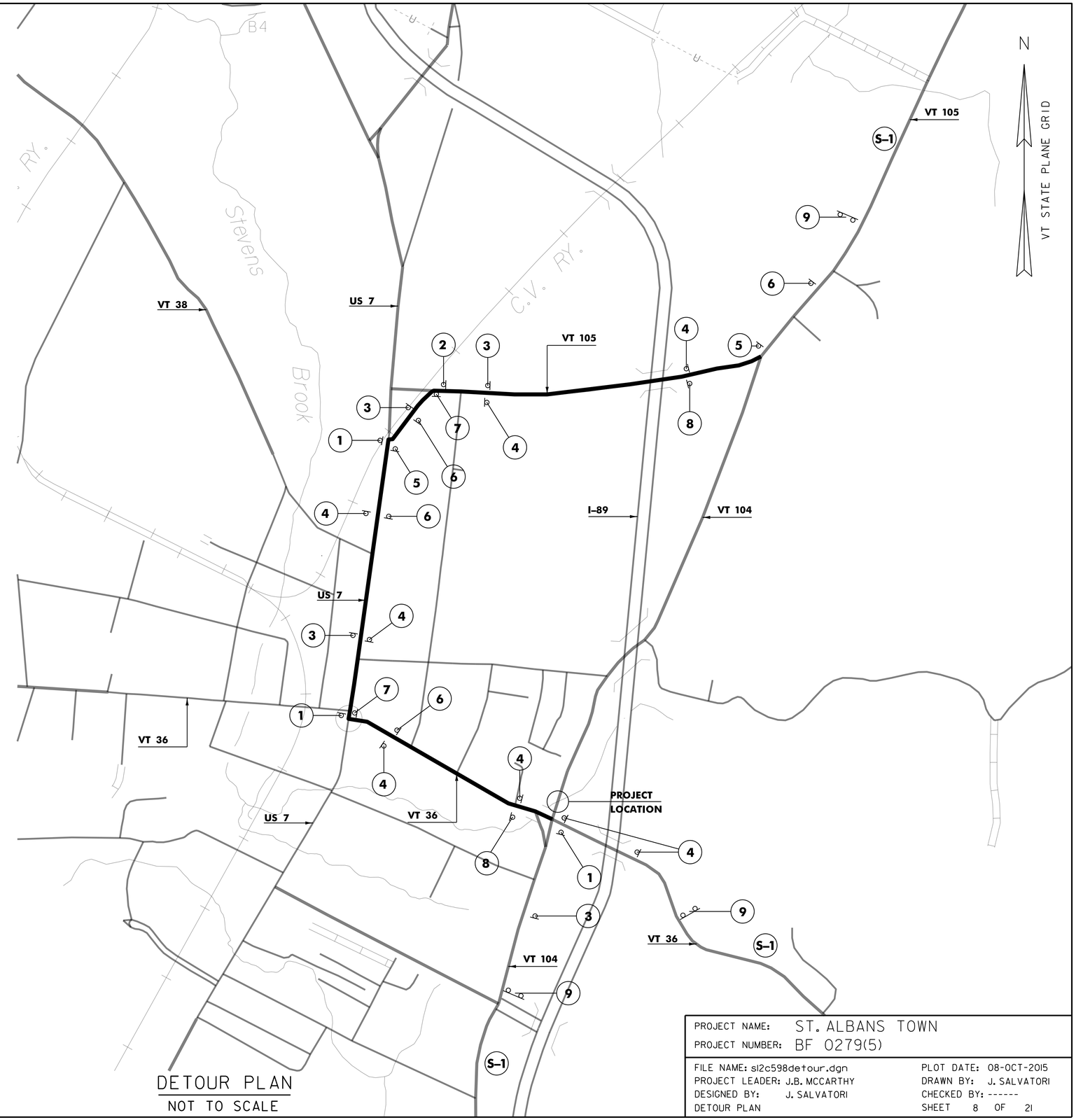


DETOUR PLAN
NOT TO SCALE

| | |
|---|---|
| PROJECT NAME: | ST. ALBANS TOWN |
| PROJECT NUMBER: | BF 0279(5) |

| | |
|---|---|
| FILE NAME: s12c598detour.dgn | PLOT DATE: 08-OCT-2015 |
| PROJECT LEADER: J.B. MCCARTHY | DRAWN BY: J. SALVATORI |
| DESIGNED BY: J. SALVATORI | CHECKED BY: ------ |
| DETOUR PLAN | SHEET 8 OF 21 |

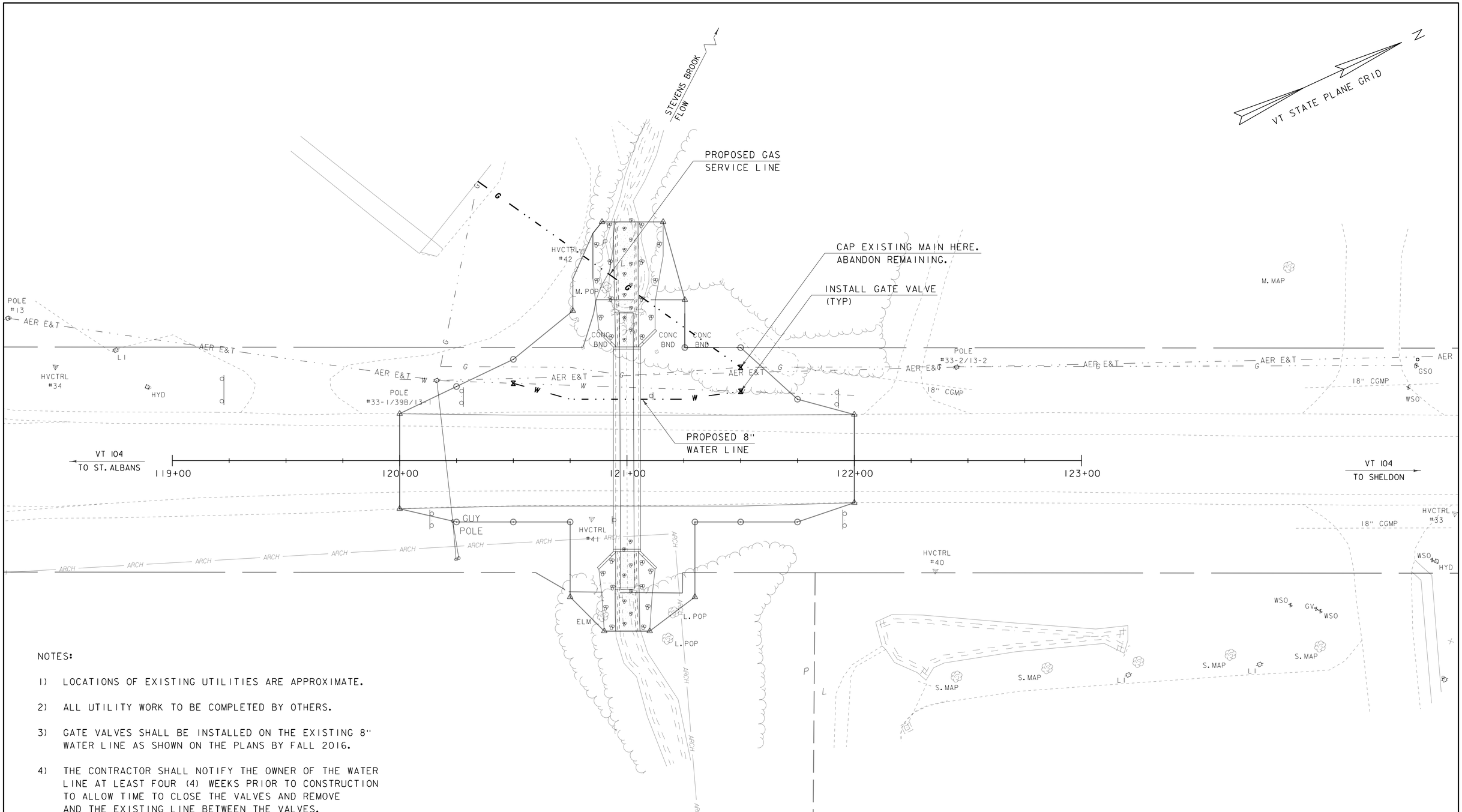


NOTES:

1) LOCATIONS OF EXISTING UTILITIES ARE APPROXIMATE.

2) ALL UTILITY WORK TO BE COMPLETED BY OTHERS.

3) GATE VALVES SHALL BE INSTALLED ON THE EXISTING 8" WATER LINE AS SHOWN ON THE PLANS BY FALL 2016.

4) THE CONTRACTOR SHALL NOTIFY THE OWNER OF THE WATER LINE AT LEAST FOUR (4) WEEKS PRIOR TO CONSTRUCTION TO ALLOW TIME TO CLOSE THE VALVES AND REMOVE AND THE EXISTING LINE BETWEEN THE VALVES.

5) THE NEW 8" WATER LINE SHALL NOT BE INSTALLED UNTIL AFTER THE INSTALLATION OF THE NEW STRUCTURE.

6) THE EXISTING 4" GAS LINE SHALL BE CAPPED AS SHOWN ON THE PLANS BY SPRING 2017. PRIOR TO CONSTRUCTION, THE REMAINING LINES SHALL BE ABANDONED.

6) THE NEW GAS SERVICE SHALL NOT BE INSTALLED UNTIL AFTER THE INSTALLATION OF THE NEW STRUCTURE.

## UTILITY RELOCATION PLAN

SCALE 1" = 20'-0"

20 0 20

| | |
|---|---|
| PROJECT NAME: ST. ALBANS TOWN | |
| PROJECT NUMBER: BF 0279(5) | |
| FILE NAME: s12c598bdr_util.dgn | PLOT DATE: 08-OCT-2015 |
| PROJECT LEADER: J.B. MCCARTHY | DRAWN BY: J. SALVATORI |
| DESIGNED BY: J. SALVATORI | CHECKED BY: L. WHEELER |
| UTILITY RELOCATION PLAN | SHEET 9 OF 21 |

## SOIL CLASSIFICATION

AASHTO

| | |
|---|---|
| A1 | Gravel and Sand |
| A3 | Fine Sand |
| A2 | Silty or Clayey Gravel and Sand |
| A4 | Silty Soil - Low Compressibility |
| A5 | Silty Soil - Highly Compressible |
| A6 | Clayey Soil - Low Compressibility |
| A7 | Clayey Soil - Highly Compressible |

## ROCK QUALITY DESIGNATION

| R.Q.D. (%) | ROCK DESCRIPTION |
|---|---|
| <25 | Very Poor |
| 25 to 50 | Poor |
| 51 to 75 | Fair |
| 76 to 90 | Good |
| >90 | Excellent |

## SHEAR STRENGTH

| UNDRAINED SHEAR STRENGTH IN P.S.F. | CONSISTENCY |
|---|---|
| <250 | Very Soft |
| 250-500 | Soft |
| 500-1000 | Med. Stiff |
| 1000-2000 | Stiff |
| 2000-4000 | Very Stiff |
| >4000 | Hard |

## CORRELATION GUIDE OF "N" TO DENSITY/CONSISTENCY

| DENSITY (GRANULAR SOILS) N | DESCRIPTIVE TERM | CONSISTENCY (COHESIVE SOILS) N | DESCRIPTIVE TERM |
|---|---|---|---|
| <5 | Very Loose | <2 | Very Soft |
| 5-10 | Loose | 2-4 | Soft |
| 11-24 | Med. Dense | 5-8 | Med. Stiff |
| 25-50 | Dense | 9-15 | Stiff |
| >50 | Very Dense | 16-30 | Very Stiff |
| | | 31-60 | Hard |
| | | >60 | Very Hard |

## COMMONLY USED SYMBOLS

| | |
|---|---|
| ▼ | Water Elevation |
| ⊗ | Standard Penetration Boring |
| ⊕ | Auger Boring |
| ⊙ | Rod Sounding |
| S | Sample |
| N | Standard Penetration Test<br>Blow Count Per Foot For:<br>2" O.D. Sampler<br>1 3/8" I.D. Sampler<br>Hammer Weight Of 140 Lbs.<br>Hammer Fall Of 30" |
| VS | Field Vane Shear Test |
| US | Undisturbed Soil Sample |
| B | Blast |
| DC | Diamond Core |
| MD | Mud Drill |
| WA | Wash Ahead |
| HSA | Hollow Stem Auger |
| AX | Core Size 1 1/8" |
| BX | Core Size 1 5/8" |
| NX | Core Size 2 1/8" |
| M | Double Tube Core Barrel Used |
| LL | Liquid Limit |
| PL | Plastic Limit |
| PI | Plasticity Index |
| NP | Non Plastic |
| w | Moisture Content (Dry Wgt. Basis) |
| D | Dry |
| M | Moist |
| MTW | Moist To Wet |
| W | Wet |
| Sat | Saturated |
| Bo | Boulder |
| Gr | Gravel |
| Sa | Sand |
| Si | Silt |
| Cl | Clay |
| HP | Hardpan |
| Le | Ledge |
| NLTD | No Ledge To Depth |
| CNPF | Can Not Penetrate Further |
| TLOB | Top of Ledge Or Boulder |
| NR | No Recovery |
| Rec. | Recovery |
| %Rec. | Percent Recovery |
| RQD | Rock Quality Designation |
| CBR | California Bearing Ratio |
| < | Less Than |
| > | Greater Than |
| R | Refusal (N > 100) |
| VTSPG | NAD83 - See Note 7 |

COLOR

| | | | |
|---|---|---|---|
| blk | Black | pnk | Pink |
| bl | Blue | pu | Purple |
| brn | Brown | rd | Red |
| dk | Dark | tn | Tan |
| gry | Gray | wh | White |
| gn | Green | yel | Yellow |
| lt | Light | mltc | Multicolored |
| or | Orange | | |

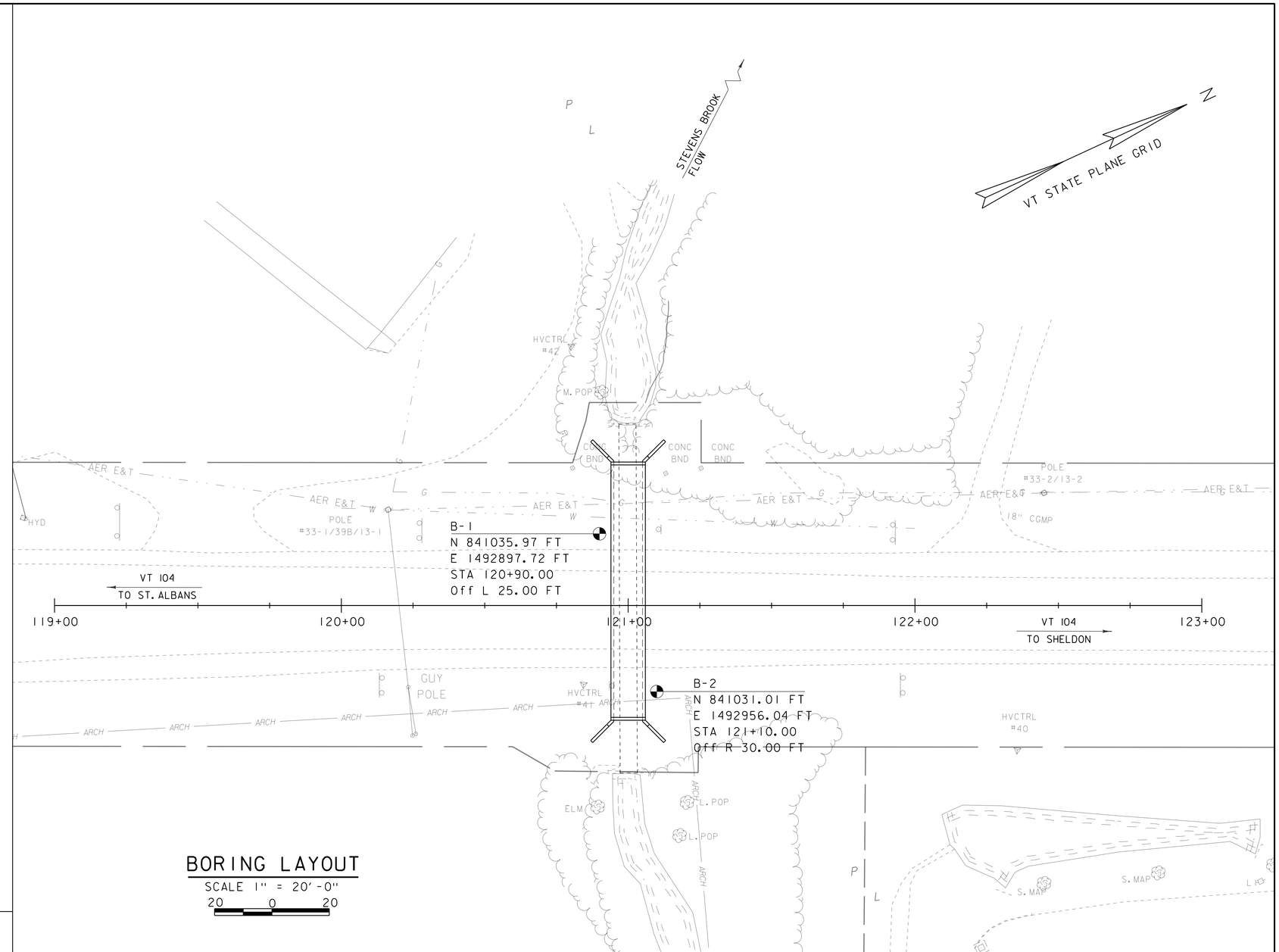


## BORING LAYOUT

SCALE 1" = 20'-0"

20 0 20

## DEFINITIONS (AASHTO)

BEDROCK (LEDGE) - Rock in its native location of indefinite thickness.

BOULDER - A rock fragment with an average dimension > 12 inches.

COBBLE - Rock fragments with an average dimension between 3 and 12 inches.

GRAVEL - Rounded particles of rock < 3" and > 0.0787" (#10 sieve).

SAND - Particles of rock < 0.0787" (#10 sieve) and > 0.0029" (#200 sieve).

SILT - Soil < 0.0029" (#200 sieve), non or slightly plastic and exhibits no strength when air-dried.

CLAY - Fine grained soil, exhibits plasticity when moist and considerable strength when air-dried.

VARVED - Alternate layers of silt and clay.

HARDPAN - Extremely dense soil, cemented layer, not softened when wet.

MUCK - Soft organic soil (containing > 10% organic material.

MOISTURE CONTENT - Weight of water divided by dry weight of soil.

FLOWING SAND - Granular soil so saturated (loose) that it flows into drill casing during extraction of wash rod.

STRIKE - Angle from magnetic north to line of intersection of bed with a horizontal plane.

DIP - Inclination of bed with a horizontal plane.

## GENERAL NOTES

1. The subsurface explorations shown herein were made between 8/26/2015 and 8/27/2015 by the Agency.

2. Soil and rock classifications, properties and descriptions are based on engineering interpretation from available subsurface information by the Agency and may not necessarily reflect actual variations in subsurface conditions that may be encountered between individual boring or sample locations.

3. Observed water levels and/or conditions indicated are as recorded at the time of exploration and may vary according to the prevailing rainfall, methods of exploration and other factors.

4. Engineering judgment was exercised in preparing the subsurface information presented herein. Analysis and interpretation of subsurface data was performed and interpreted for Agency design and estimating purposes. Presentation of the information in the Contract is intended to provide the Contractor access to the same data available to the Agency. The subsurface information is presented in good faith and is not intended as a substitute for personal investigation, independent interpretation, independent analysis or judgment by the Contractor.

5. Pictorial structure details shown on the boring plan layout or soils profile are for illustrative purposes only and may not accurately portray final contract details.

6. Terminology used on boring logs to describe the hardness, degree of weathering, and spacing of fractures, joints and other discontinuities in the bedrock is defined in the AASHTO Manual on Subsurface Investigations, 1988.

7. Northing and Easting coordinates are shown in Vermont State Plane Grid North American Datum 1983 in meters and survey feet.

PROJECT NAME: ST. ALBANS TOWN
PROJECT NUMBER: BF 0279(5)

FILE NAME: S12c598bor.dgn
PROJECT LEADER: J.B. MCCARTHY
DESIGNED BY: J. SALVATORI
BORING INFORMATION SHEET

PLOT DATE: 08-OCT-2015
DRAWN BY: J. SALVATORI
CHECKED BY: ------
SHEET 10 OF 21

STATE OF VERMONT
AGENCY OF TRANSPORTATION
CONSTRUCTION AND
MATERIALS BUREAU
CENTRAL LABORATORY

# BORING LOG

**ST ALBANS TOWN**
**BF 0279(5)**
**VT 104 BR #19**

Boring No.: **B-101**
Page No.: 1 of 1
Pin No.: 12c598
Checked By: END

Boring Crew: GARROW, NIETO
Date Started: 8/27/15 Date Finished: 8/27/15
VTSPG NAD83: N 841037.41 ft E 1492898.53 ft
Station: 120+90.00 Offset: -25.00
Ground Elevation: 566.61 ft

| | Casing | Sampler |
|---|---|---|
| Type: | WB | SS |
| I.D.: | 4 in | 1.5 in |
| Hammer Wt: | N.A. | 140 lb. |
| Hammer Fall: | N.A. | 30 in. |

Hammer/Rod Type: Auto/AWJ
Rig: CME 45C SKID AUTO $C_E$ = 1.33

| Groundwater Observations | | |
|---|---|---|
| Date | Depth (ft) | Notes |
| 08/27/15 | 10.1 | After Drilling. |

| Depth (ft) | Strata (1) | CLASSIFICATION OF MATERIALS (Description) | Blows/6" (N Value) | Moisture Content % | Gravel % | Sand % | Fines % | LL % | PI % |
|---|---|---|---|---|---|---|---|---|---|
| | | A-1-b, GrSa, brn-Lt/gry, Moist, Rec. = 1.4 ft, Lab Note: Broken Rock was within sample. | WH-6-6-5 (12) | 6.4 | 36.6 | 49.9 | 13.5 | | |
| | | A-2-4, Sa, Lt/brn-Lt/gry, Moist, Rec. = 1.6 ft | 5-5-5-5 (10) | 8.8 | 19.4 | 66.2 | 14.4 | | |
| 5 | | A-1-b, GrSa, Lt/brn, Moist, Rec. = 0.9 ft, Lab Note: Broken Rock was within sample. | 10-12-10-8 (20) | 8.6 | 37.6 | 43.8 | 18.6 | | |
| | | A-2-4, SiGrSa, Lt/brn, Moist, Rec. = 0.2 ft | 4-4-1-1 (5) | 10.1 | 28.6 | 50.8 | 20.6 | | |
| | | Field Note:, No Recovery | (WR) | | | | | | |
| 10 | | A-1-b, SaGr, brn, Moist, Rec. = 0.4 ft, Lab Note: Broken Rock was within sample. | WH-WH-2-12 (2) | 12.7 | 49.6 | 35.3 | 15.1 | | |
| | | A-4, GrSaSi, gry, Moist, Rec. = 1.5 ft, Lab Note: Broken Rock was within sample. | 3-20-37-27 (57) | 11.0 | 25.3 | 27.2 | 47.5 | | |
| 15 | | A-4, SaSi, gry, Moist, Rec. = 1.3 ft | 27-48-R@2.5" (R) | 10.3 | 16.9 | 22.4 | 60.7 | 19 | 4 |
| | | A-4, GrSaSi, gry, Moist, Rec. = 1.1 ft, Lab Note: Broken Rock was within sample. | 35-R@5.0" (R) | 11.6 | 22.0 | 23.3 | 54.7 | | |
| | | A-4, GrSaSi, gry, Moist, Rec. = 1.3 ft, Lab Note: Broken Rock was within sample. | 18-35-R@5.0" (R) | 11.3 | 20.4 | 20.9 | 58.7 | 20 | 6 |
| 20 | | | | | | | | | |
| 25 | | A-4, SaSi, gry, Moist, Rec. = 1.6 ft | 25-33-R@6.0" (R) | 9.2 | 16.8 | 25.2 | 58.0 | 19 | 5 |
| 30 | | A-4, SaSi, gry, Moist, Rec. = 1.1 ft | 32-48-R@1.0" (R) | 9.1 | 14.5 | 25.0 | 60.5 | | |
| 35 | | A-4, SaSi, gry, Moist, Rec. = 1.3 ft, Lab Note: Broken Rock was within sample. A Trace of clay was noticeable. Sample tested non-plastic | 26-39-R@6.0" (R) | 8.7 | 17.4 | 24.2 | 58.4 | | |
| | | Hole stopped @ 36.5 ft | | | | | | | |
| 40 | | Remarks: Hole collapsed at 24.0 feet. | | | | | | | |

Notes:
1. Stratification lines represent approximate boundary between material types. Transition may be gradual.
2. N Values have not been corrected for hammer energy. $C_E$ is the hammer energy correction factor.
3. Water level readings have been made at times and under conditions stated. Fluctuations may occur due to other factors than those present at the time measurements were made.

BORING LOG 2 ST. ALBANS TOWN BF 0279(5).GPJ VERMONT AOT GDT 9/24/15

STATE OF VERMONT
AGENCY OF TRANSPORTATION
CONSTRUCTION AND
MATERIALS BUREAU
CENTRAL LABORATORY

# BORING LOG

**ST ALBANS TOWN**
**BF 0279(5)**
**VT 104 BR #19**

Boring No.: **B-102**
Page No.: 1 of 1
Pin No.: 12c598
Checked By: END

Boring Crew: GARROW, NIETO
Date Started: 8/26/15 Date Finished: 8/26/15
VTSPG NAD83: N 841036.31 ft E 1492957.78 ft
Station: 121+10.00 Offset: 30.00
Ground Elevation: 564.92 ft

| | Casing | Sampler |
|---|---|---|
| Type: | WB | SS |
| I.D.: | 4 in | 1.5 in |
| Hammer Wt: | N.A. | 140 lb. |
| Hammer Fall: | N.A. | 30 in. |

Hammer/Rod Type: Auto/AWJ
Rig: CME 45C SKID AUTO $C_E$ = 1.33

| Groundwater Observations | | |
|---|---|---|
| Date | Depth (ft) | Notes |
| 08/26/15 | 5.7 | After Driling. |

| Depth (ft) | Strata (1) | CLASSIFICATION OF MATERIALS (Description) | Blows/6" (N Value) | Moisture Content % | Gravel % | Sand % | Fines % |
|---|---|---|---|---|---|---|---|
| | | A-2-4, SiGrSa, brn, Moist, Rec. = 1.1 ft, Lab Note: Broken Rock, grass, and roots were within sample. | 1-2-3-5 (5) | 10.5 | 29.7 | 44.9 | 25.4 |
| | | Field Note:, No Recovery | 5-4-4-3 (8) | | | | |
| 5 | | Visual Description:, SiSa, brn, Moist, Rec. = 0.1 ft, Lab Note: Insuffiecient sample size for testing. | 5-4-4-4 (8) | 11.1 | | | |
| | | A-1-B, SiSaGr, brn-Lt/brn, Moist, Rec. = 1.0 ft, Lab Note: Broken Rock was within sample. | 6-9-5-4 (14) | 10.8 | 48.0 | 31.6 | 20.4 |
| | | A-1-B, SiSaGr, brn-gry, Moist, Rec. = 0.4 ft, Lab Note: Broken Rock was within sample. | 12-6-6-6 (12) | 12.1 | 45.1 | 33.0 | 21.9 |
| | | A-1-B, GrSa, Lt/brn-gry, Moist, Rec. = 0.8 ft, Lab Note: Broken Rock was within sample. | | 17.5 | 37.9 | 42.1 | 20.0 |
| 10 | | A-4, GrSaSi, gry-Lt/brn, Moist, Rec. = 1.0 ft | 3-2-6-R@5.0" (8) | 12.7 | 24.2 | 32.5 | 43.3 |
| | | Visual Description:, Broken Rock with SaSi, gry, Moist, Rec. = 0.3 ft, Lab Note: Insuffiecient sample size for testing. | R@3.5" (R) | 7.9 | | | |
| 15 | | A-4, SaGrSi, gry, Moist, Rec. = 0.5 ft, Lab Note: Broken Rock was within sample. A trace of clay was noticeable. Sample tested non-plastic. | R@6.0" (R) | 7.9 | 35.4 | 23.7 | 40.9 |
| | | A-4, SaSi, gry, Moist, Rec. = 0.5 ft, Lab Note: Broken Rock was within sample. A trace of clay was noticeable. Sample tested non-plastic. | R@6.0" (R) | 9.9 | 17.8 | 26.5 | 55.7 |
| | | A-4, Si, gry, Moist, Rec. = 1.1 ft, Lab Note: A trace of clay was noticeable. Sample tested non-plastic. | 37-R@5.0" (R) | 13.2 | 11.6 | 19.1 | 69.3 |
| 20 | | | | | | | |
| 25 | | Visual Description:, Broken Rock with Si, gry, Moist, Rec. = 0.3 ft, Lab Note: Insuffiecient sample size for testing. | R@3.5" (R) | 9.5 | | | |
| 30 | | A-4, SaGrSi, gry, Moist, Rec. = 0.4 ft, Lab Note: Broken Rock was within sample. | R@5.0" (R) | 7.9 | 33.4 | 28.2 | 38.4 |
| 35 | | Field Note:, No Recovery | 26-35-R@5.0" (R) | | | | |
| | | Hole stopped @ 36.4 ft | | | | | |
| 40 | | Remarks: Hole collapsed at 7.6 feet. | | | | | |

Notes:
1. Stratification lines represent approximate boundary between material types. Transition may be gradual.
2. N Values have not been corrected for hammer energy. $C_E$ is the hammer energy correction factor.
3. Water level readings have been made at times and under conditions stated. Fluctuations may occur due to other factors than those present at the time measurements were made.

BORING LOG 2 ST. ALBANS TOWN BF 0279(5).GPJ VERMONT AOT GDT 9/24/15

PROJECT NAME: ST. ALBANS TOWN
PROJECT NUMBER: BF 0279(5)

FILE NAME: S12c598bor.dgn
PROJECT LEADER: J.B. MCCARTHY
DESIGNED BY: J. SALVATORI
BORING LOGS

PLOT DATE: 08-OCT-2015
DRAWN BY: J. SALVATORI
CHECKED BY: ------
SHEET 11 OF 21

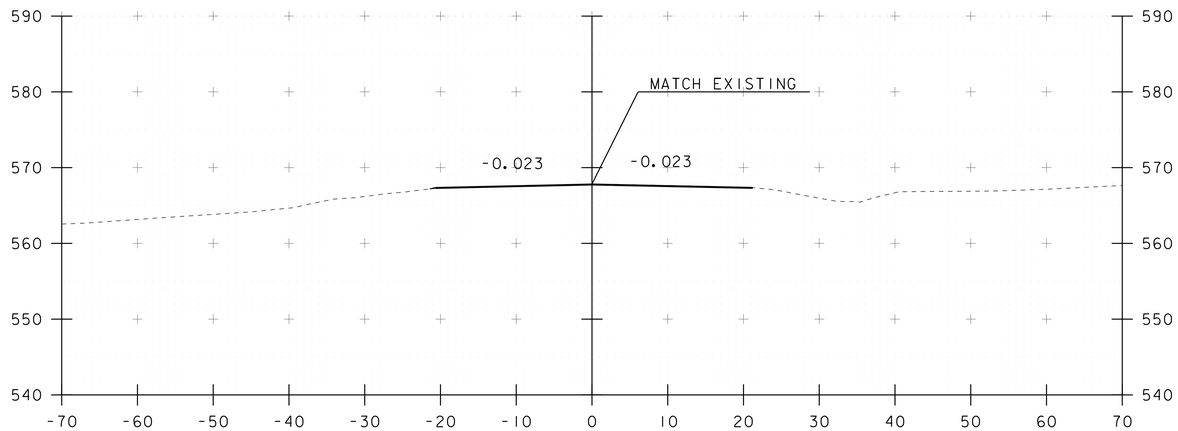


120+00
BEGIN APPROACH

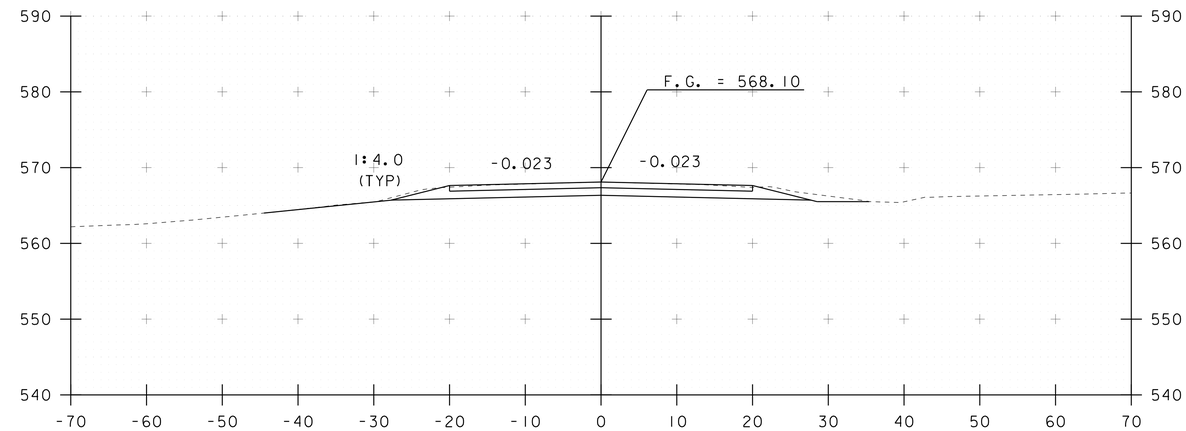


120+50
BEGIN PROJECT

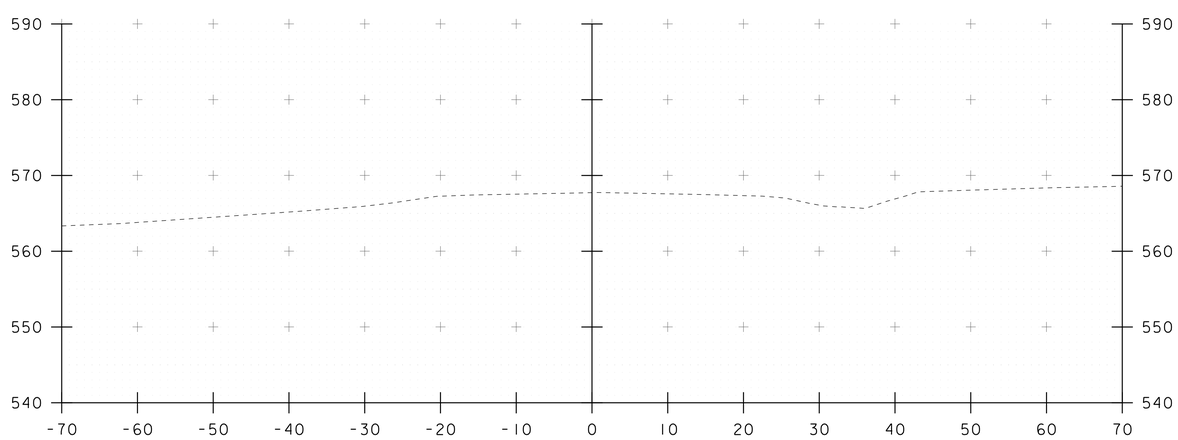


119+75

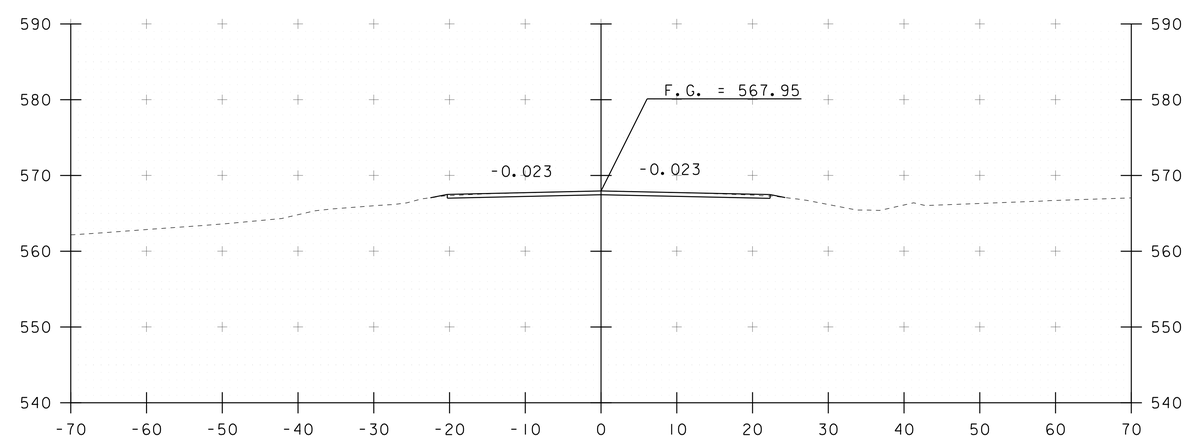


120+25

| | |
|---|---|
| PROJECT NAME: ST. ALBANS TOWN | |
| PROJECT NUMBER: BF 0279(5) | |
| FILE NAME: sl2c598xs.dgn | PLOT DATE: 08-OCT-2015 |
| PROJECT LEADER: J.B. MCCARTHY | DRAWN BY: J. SALVATORI |
| DESIGNED BY: J. SALVATORI | CHECKED BY: ------ |
| MAINLINE SECTIONS | SHEET 12 OF 21 |

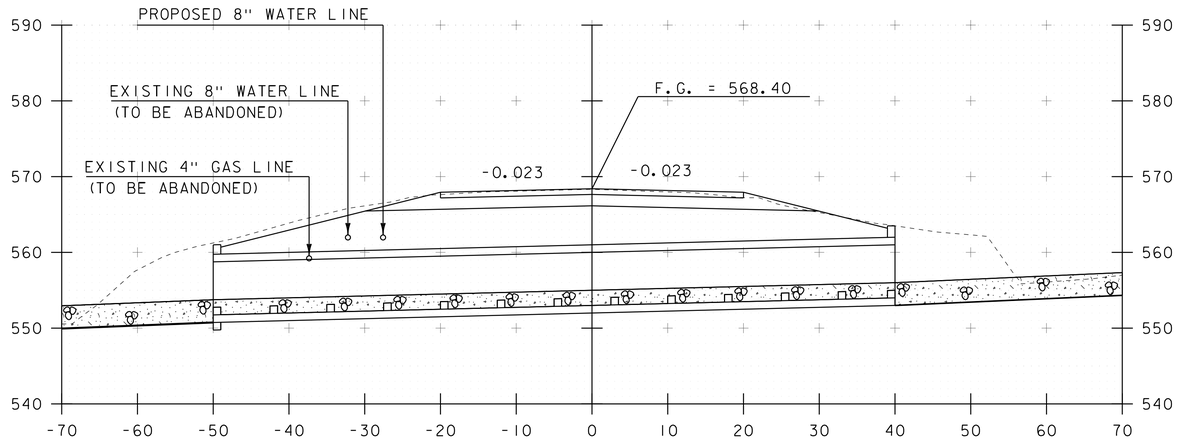


121+00

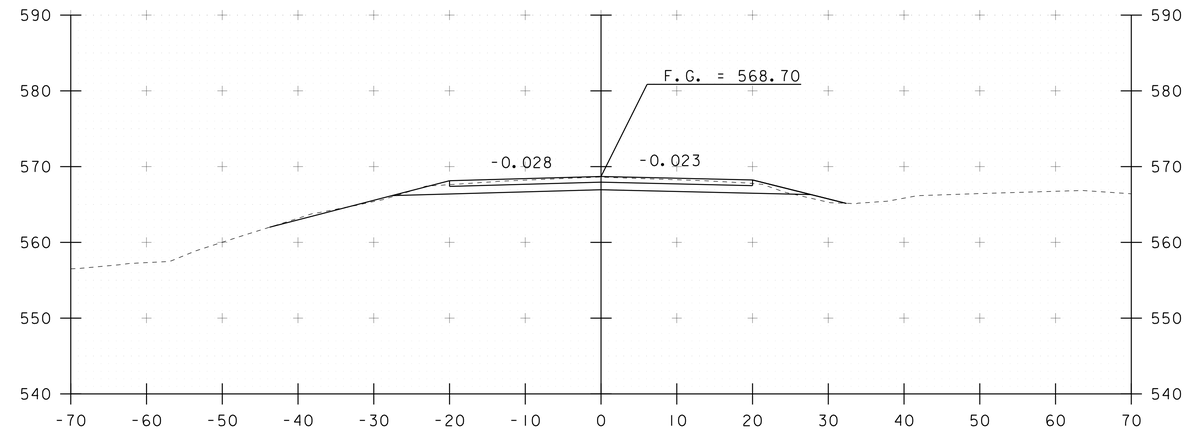


121+50
END PROJECT

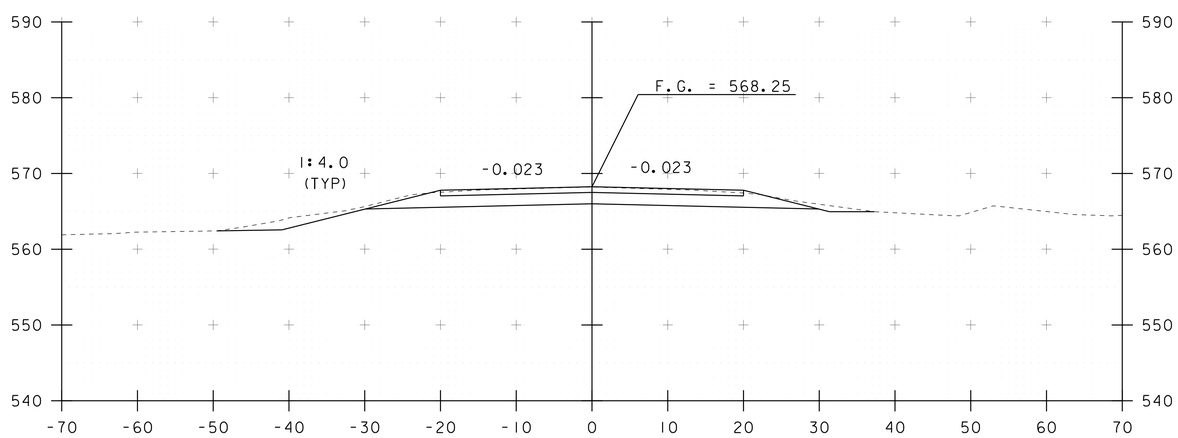


120+75

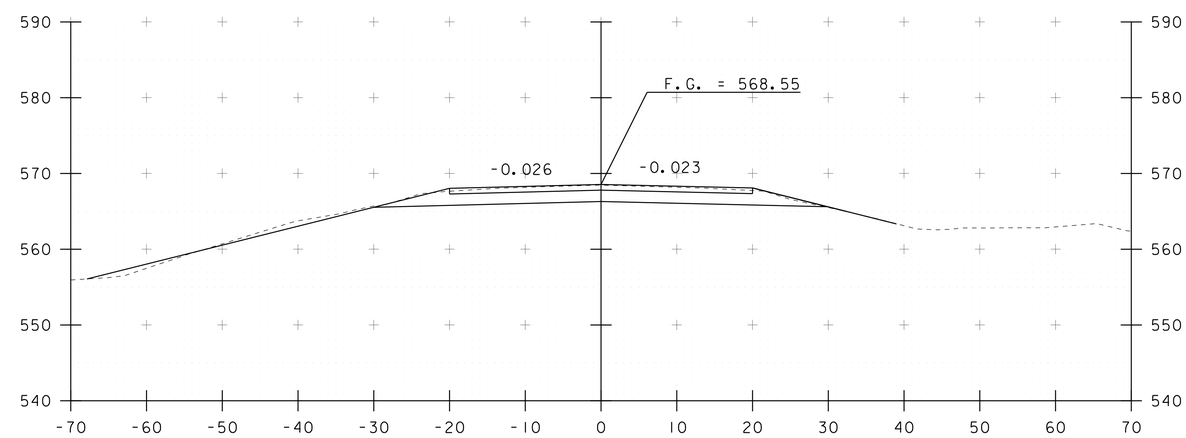


121+25

| | |
|---|---|
| PROJECT NAME: ST. ALBANS TOWN | |
| PROJECT NUMBER: BF 0279(5) | |
| FILE NAME: sl2c598xs.dgn | PLOT DATE: 08-OCT-2015 |
| PROJECT LEADER: J.B. MCCARTHY | DRAWN BY: J. SALVATORI |
| DESIGNED BY: J. SALVATORI | CHECKED BY: ------ |
| MAINLINE SECTIONS | SHEET 13 OF 21 |

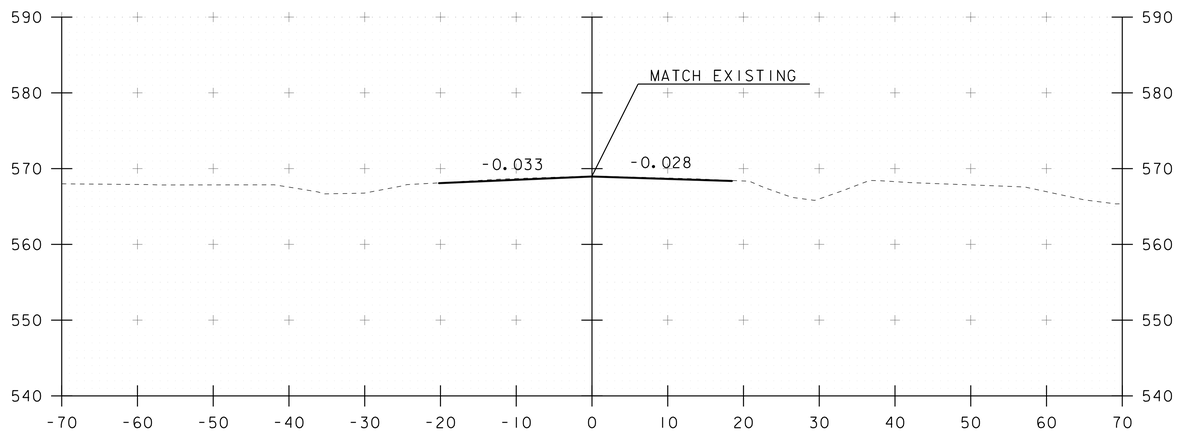


122+00
END APPROACH

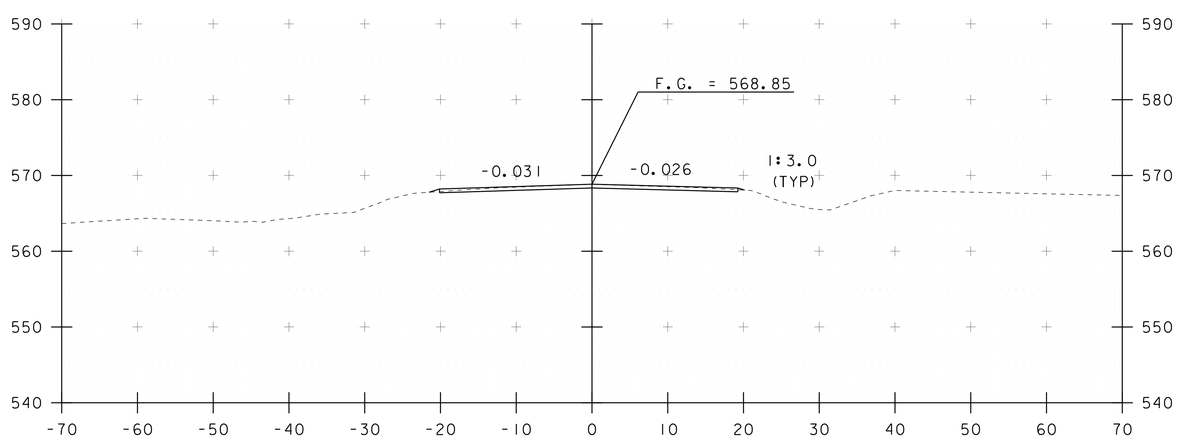


121+75

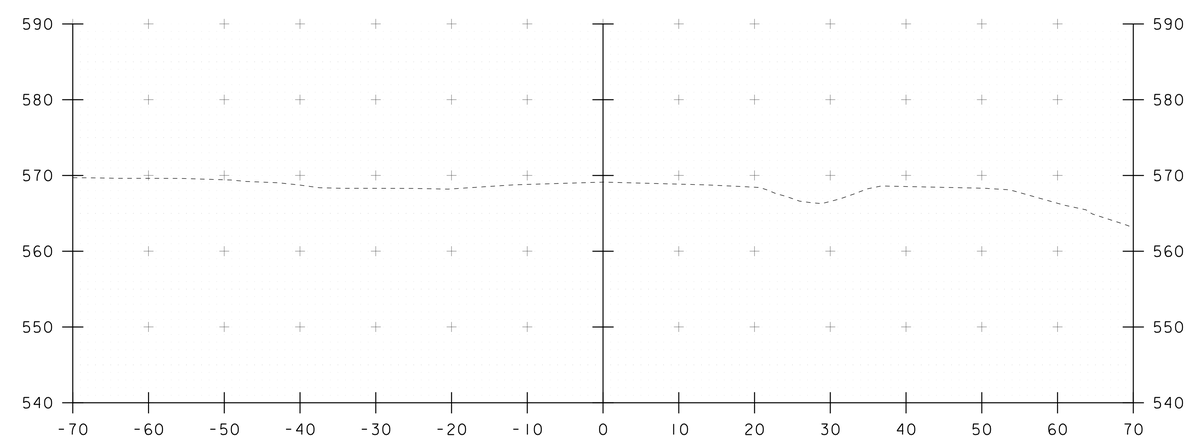


122+25

| | |
|---|---|
| PROJECT NAME: ST. ALBANS TOWN | |
| PROJECT NUMBER: BF 0279(5) | |
| FILE NAME: sl2c598xs.dgn | PLOT DATE: 08-OCT-2015 |
| PROJECT LEADER: J.B. MCCARTHY | DRAWN BY: J. SALVATORI |
| DESIGNED BY: J. SALVATORI | CHECKED BY: ------ |
| MAINLINE SECTIONS | SHEET 14 OF 21 |

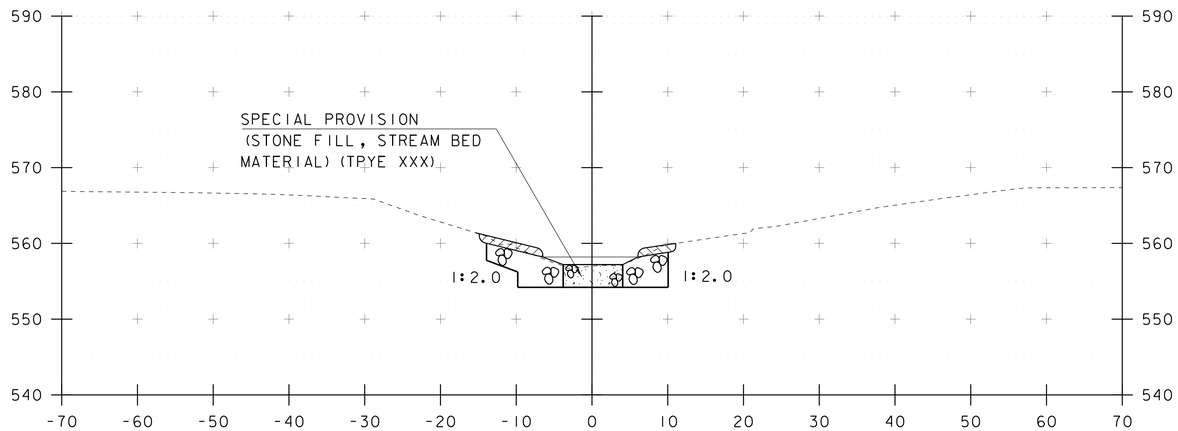


50+30

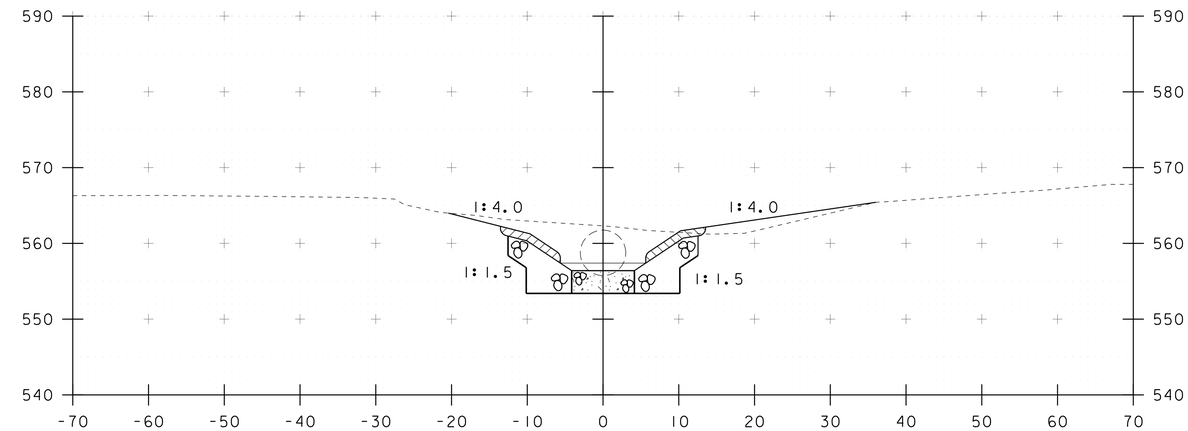


50+50

STA 50+25
BEGIN UNCLASSIFIED CHANNEL EXCAVATION
BEGIN GEOTEXTILE UNDER STONE FILL
BEGIN STONE FILL, TYPE XXX
BEGIN SPECIAL PROVISION (STONE FILL STREAM BED MATERIAL) (TYPE XXX)
BEGIN GRUBBING MATERIAL

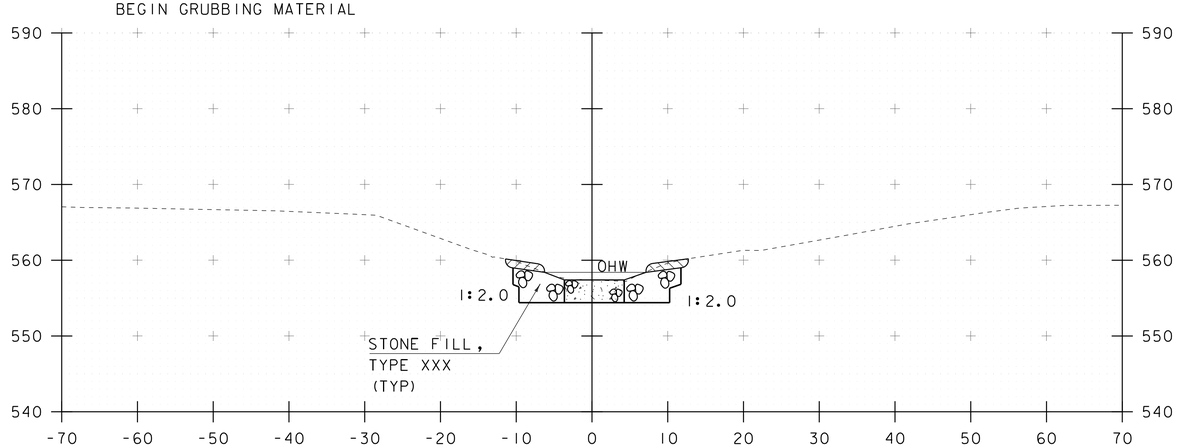


50+25

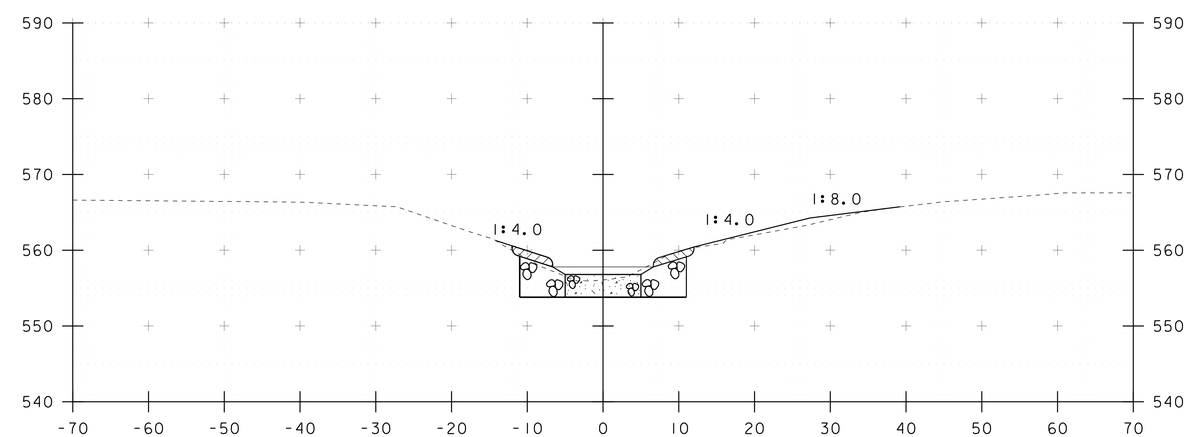


50+40

STA. 50+25 TO STA. 50+50

| | |
|---|---|
| PROJECT NAME: ST. ALBANS TOWN | |
| PROJECT NUMBER: BF 0279(5) | |
| FILE NAME: s12c598xs.dgn | PLOT DATE: 08-OCT-2015 |
| PROJECT LEADER: J.B. MCCARTHY | DRAWN BY: J. SALVATORI |
| DESIGNED BY: J. SALVATORI | CHECKED BY: ------ |
| CHANNEL SECTIONS | SHEET 15 OF 21 |

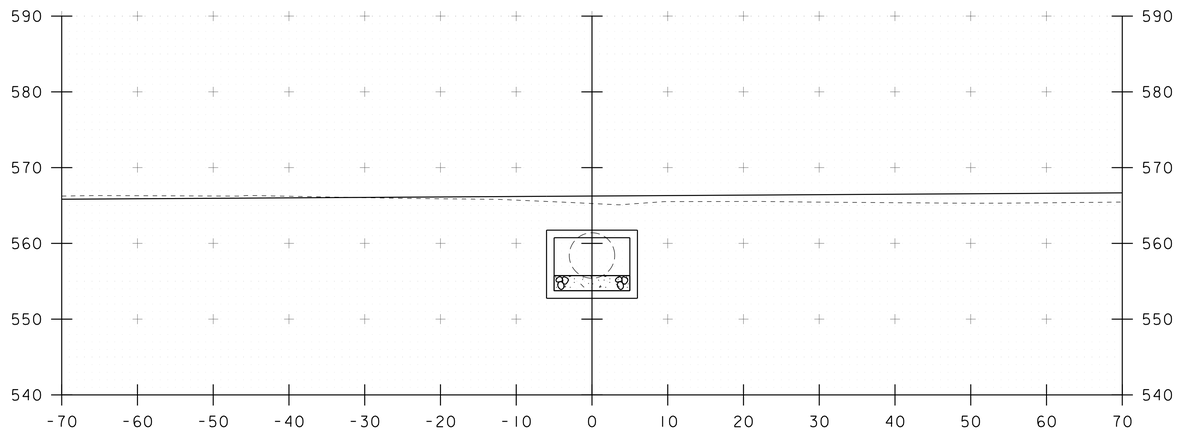


50+70

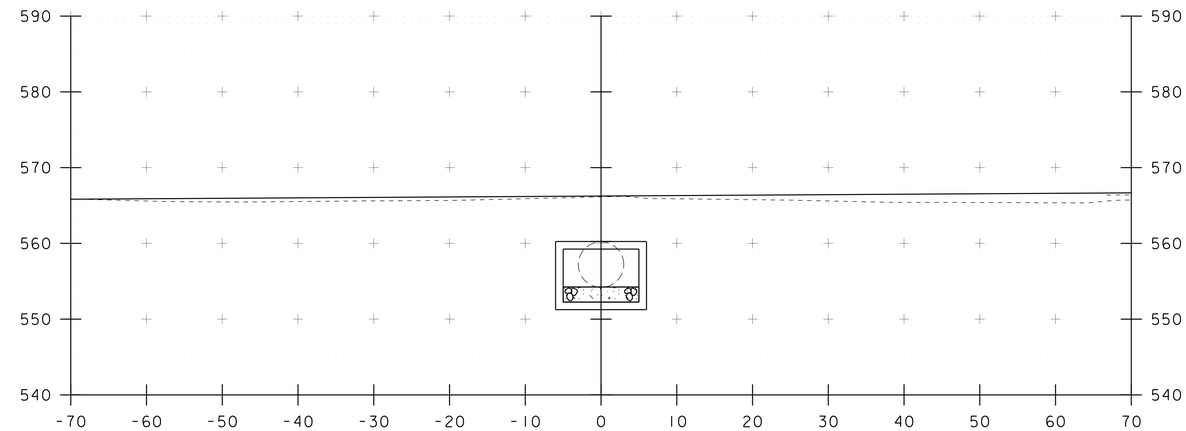


51+30

STA 50+60 BACK STATION
END UNCLASSIFIED CHANNEL EXCAVATION
END GEOTEXTILE UNDER STONE FILL
END STONE FILL, TYPE XXX
END GRUBBING MATERIAL

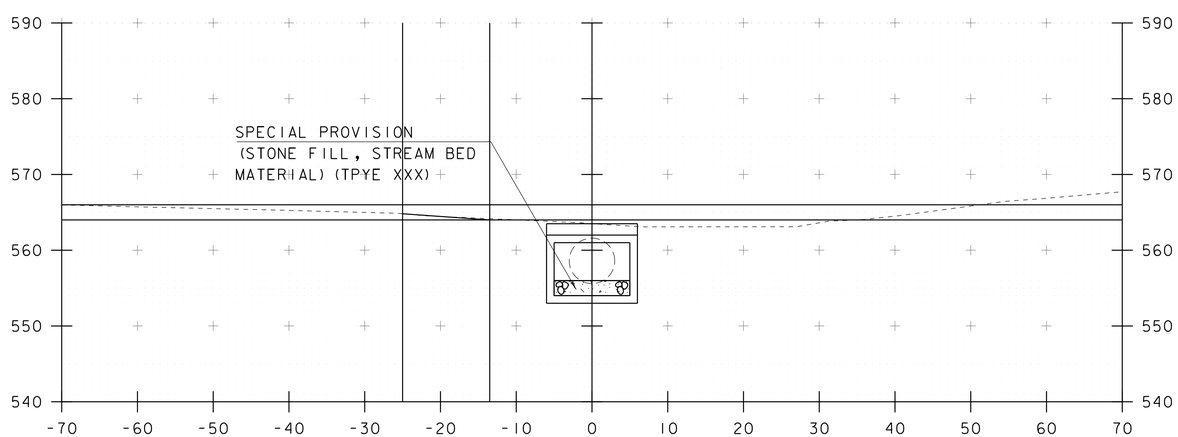


50+60

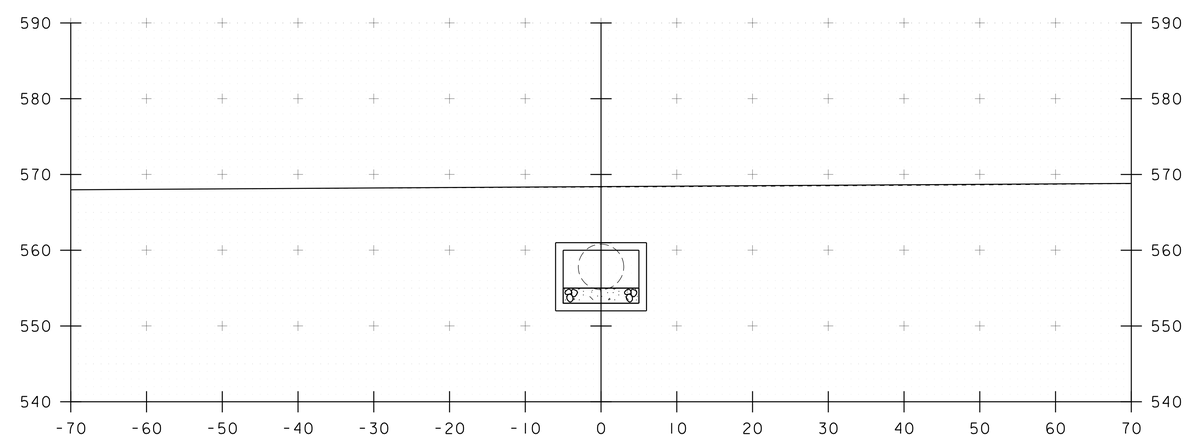


51+00

STA. 50+60 TO STA. 51+30

| | |
|---|---|
| PROJECT NAME: ST. ALBANS TOWN | |
| PROJECT NUMBER: BF 0279(5) | |
| FILE NAME: sl2c598xs.dgn | PLOT DATE: 08-OCT-2015 |
| PROJECT LEADER: J.B. MCCARTHY | DRAWN BY: J. SALVATORI |
| DESIGNED BY: J. SALVATORI | CHECKED BY: ------ |
| CHANNEL SECTIONS | SHEET 16 OF 21 |

STA 51+50 AHEAD STATION
BEGIN UNCLASSIFIED CHANNEL EXCAVATION
BEGIN GEOTEXTILE UNDER STONE FILL
BEGIN STONE FILL, TYPE XXX
BEGIN GRUBBING MATERIAL

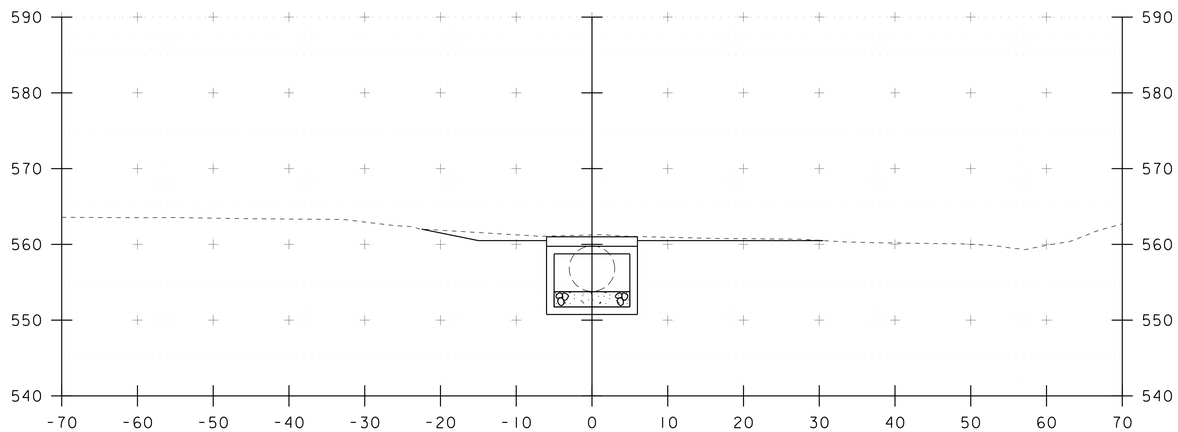


51+50

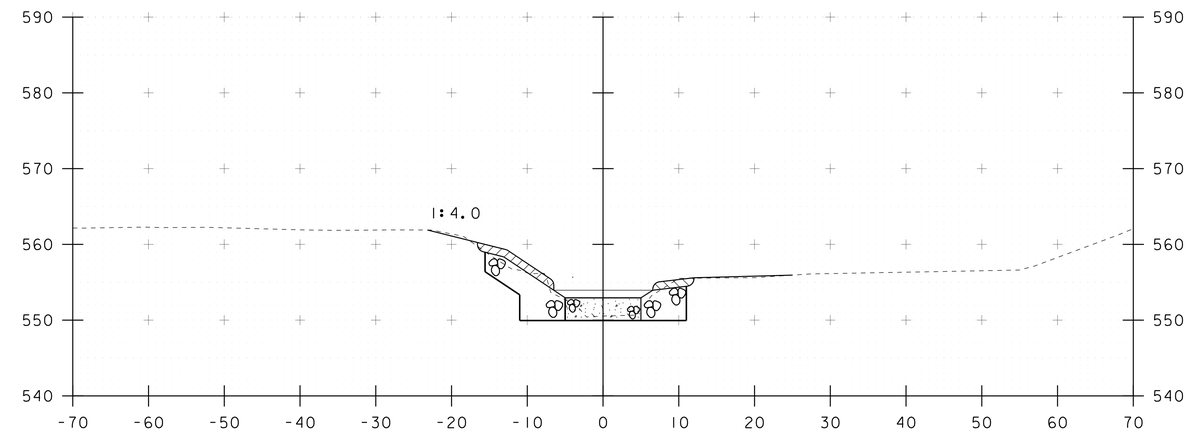


51+70

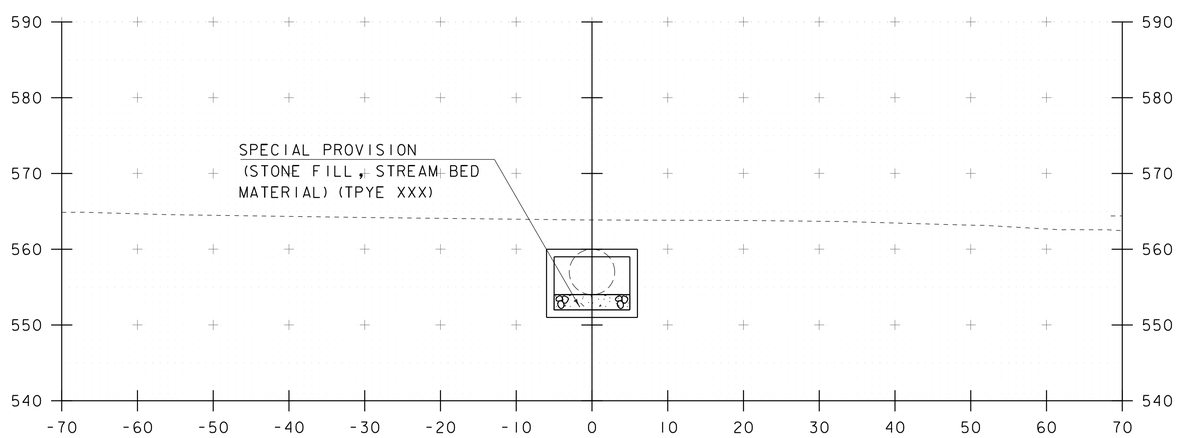


51+40

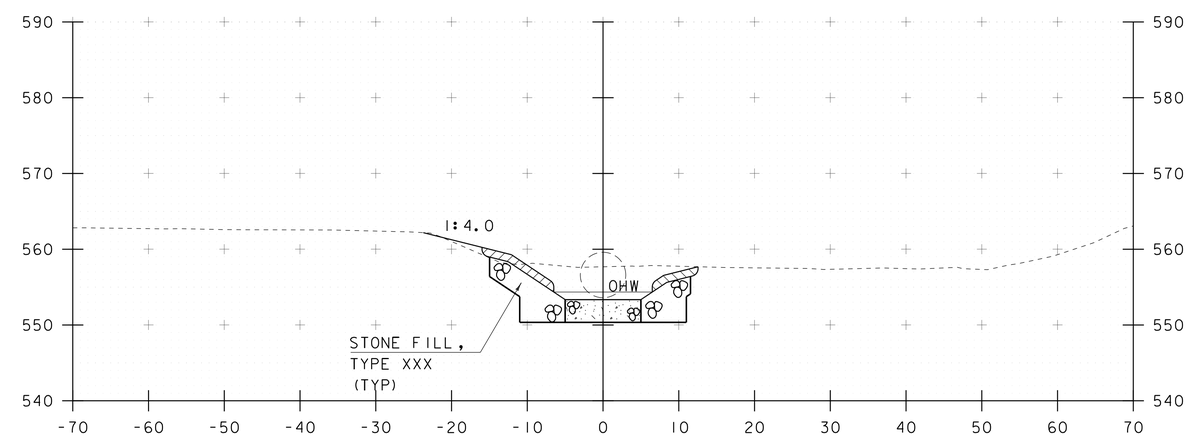


51+60

STA. 51+40 TO STA. 51+70

| | |
|---|---|
| PROJECT NAME: ST. ALBANS TOWN | |
| PROJECT NUMBER: BF 0279(5) | |
| FILE NAME: s12c598xs.dgn | PLOT DATE: 08-OCT-2015 |
| PROJECT LEADER: J.B. MCCARTHY | DRAWN BY: J. SALVATORI |
| DESIGNED BY: J. SALVATORI | CHECKED BY: ------ |
| CHANNEL SECTIONS | SHEET 17 OF 21 |

STA 52+05
END UNCLASSIFIED CHANNEL EXCAVATION
END GEOTEXTILE UNDER STONE FILL
END STONE FILL, TYPE XXX
END SPECIAL PROVISION (STONE FILL STREAM BED MATERIAL) (TYPE XXX)
END GRUBBING MATERIAL

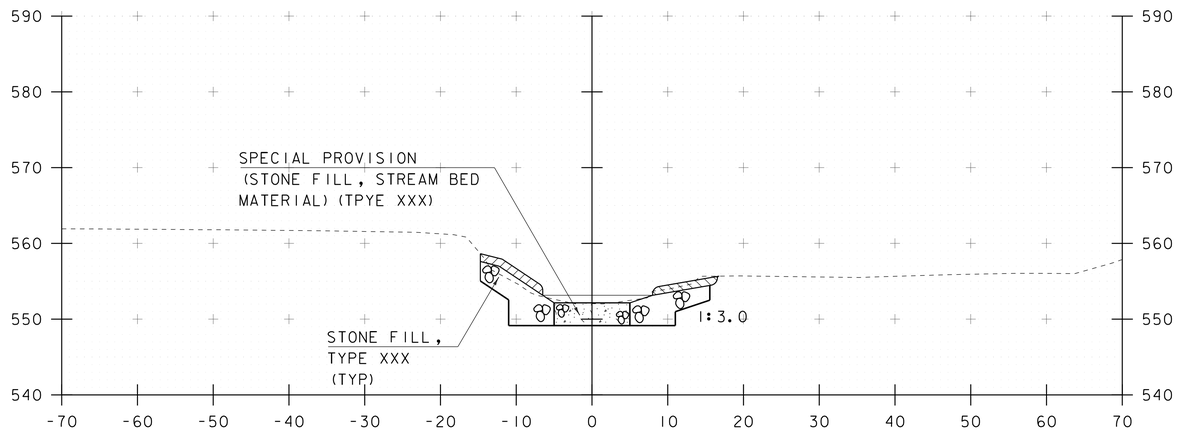


51+90

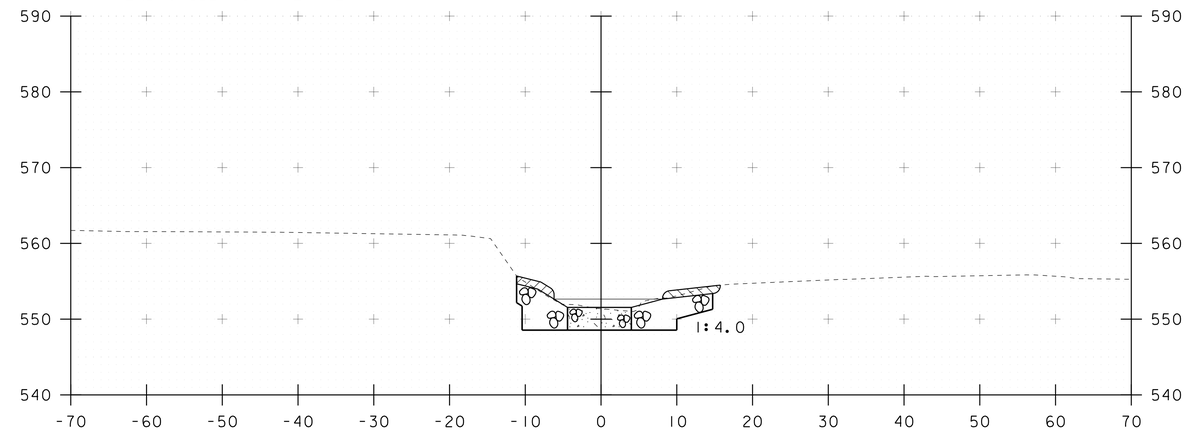


52+05

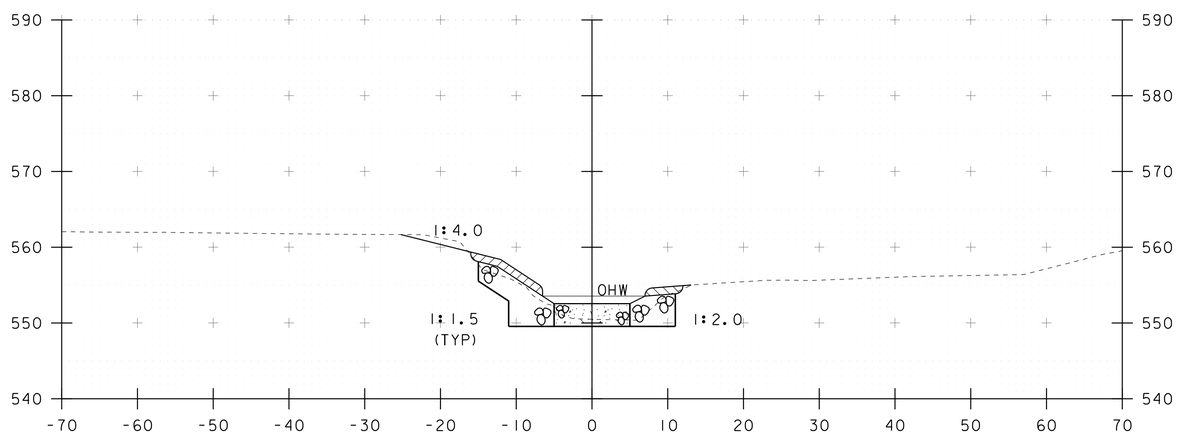


51+80

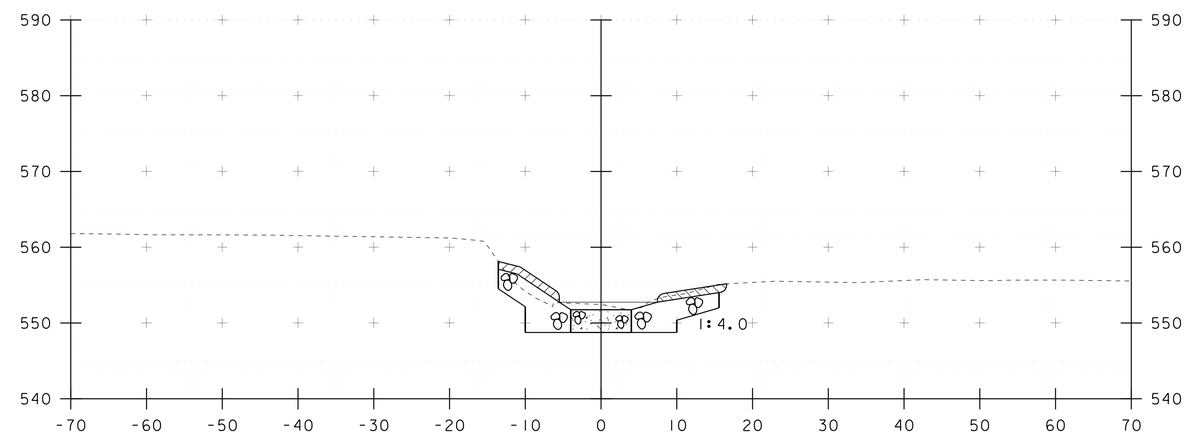


52+00

STA. 51+80 TO STA. 52+05

| | |
|---|---|
| PROJECT NAME: ST. ALBANS TOWN | |
| PROJECT NUMBER: BF 0279(5) | |
| FILE NAME: sl2c598xs.dgn | PLOT DATE: 08-OCT-2015 |
| PROJECT LEADER: J.B. MCCARTHY | DRAWN BY: J. SALVATORI |
| DESIGNED BY: J. SALVATORI | CHECKED BY: ------ |
| CHANNEL SECTIONS | SHEET 18 OF 21 |

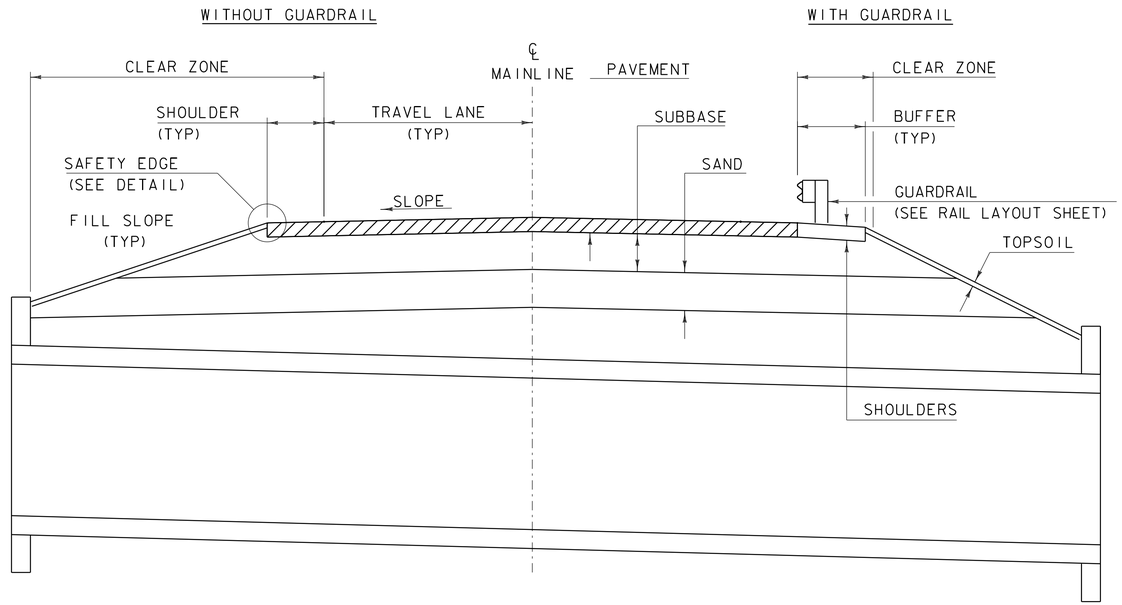


## ROADWAY TYPICAL SECTION

NOT TO SCALE

## MATERIAL INFORMATION

| | THICKNESS | TYPE |
|---|---|---|
| WEARING COURSE | 1½" | BITUMINOUS CONCRETE PAVEMENT TYPE IV |
| BINDER COURSE | 1½" | BITUMINOUS CONCRETE PAVEMENT TYPE IV |
| BASE COURSE #2 | 3" | BITUMINOUS CONCRETE PAVEMENT TYPE IV |
| BASE COURSE #1 | 3" | BITUMINOUS CONCRETE PAVEMENT TYPE IV |
| SUBBASE | 1'-6" | SUBBASE OF DENSE GRADED CRUSHED STONE |
| SAND | N/A | N/A |
| SHOULDERS | N/A | N/A |
| STONE FILL (SD) | 3'-0" | STONE FILL, TYPE III |
| TOPSOIL | 4" | TOPSOIL |
| STREAM BED MATERIAL | 3'-0" | SPECIAL PROVISION (STONE FILL, STREAM BED MATERIAL)(TYPE II) |

## ROAD TYPICAL INFORMATION

| | LEFT | | RIGHT | |
|---|---|---|---|---|
| | WIDTH | SLOPE | WIDTH | SLOPE |
| TRAVEL LANE | 11'-0" | -0.023 | 11'-0" | -0.023 |
| SHOULDER | 9'-0" | -0.023 | 9'-0" | -0.023 |
| BUFFER | N/A | N/A | N/A | N/A |
| FILL SLOPE | | 1:5.0 | | 1:5.0 |
| CLEAR ZONE (CUT) | 14'-0" | | 14'-0" | |
| CLEAR ZONE (FILL) | 16'-0" | | 16'-0" | |
| CLEAR ZONE (GUARDRAIL) | 4'-0" | | 4'-0" | |

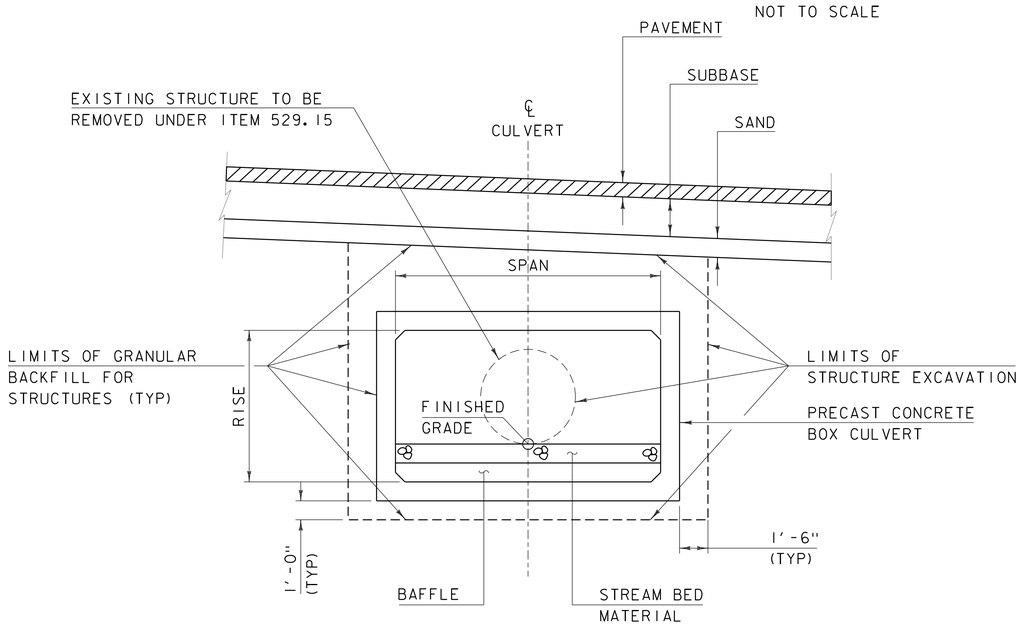


## CULVERT TYPICAL SECTION

NOT TO SCALE

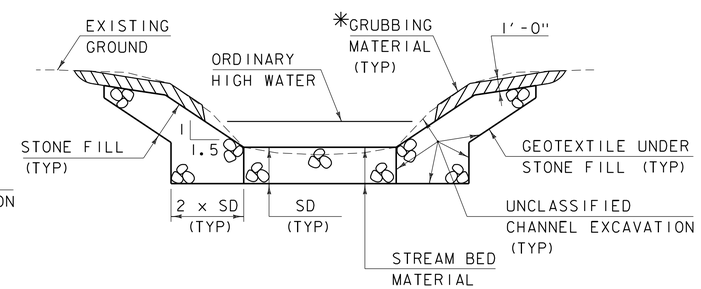


## CHANNEL TYPICAL SECTION

NOT TO SCALE

* WHENEVER CHANNEL SLOPE INTERSECTS ROADWAY SUBBASE, GRUBBING MATERIAL SHALL BEGIN AT THE BOTTOM OF SUBBASE.

## MATERIAL TOLERANCES

(IF USED ON PROJECT)

| | |
|---|---|
| SURFACE | |
| - PAVEMENT (TOTAL THICKNESS) | +/- ¼" |
| - AGGREGATE SURFACE COURSE | +/- ½" |
| SUBBASE | +/- 1" |
| SAND BORROWS | +/- 1" |

REVISIONS

# PRECAST BOX CULVERT TYPICAL SECTIONS

VERMONT AGENCY OF TRANSPORTATION
STRUCTURES - SECTION

STRUCTURES DETAIL

SD-540.10a

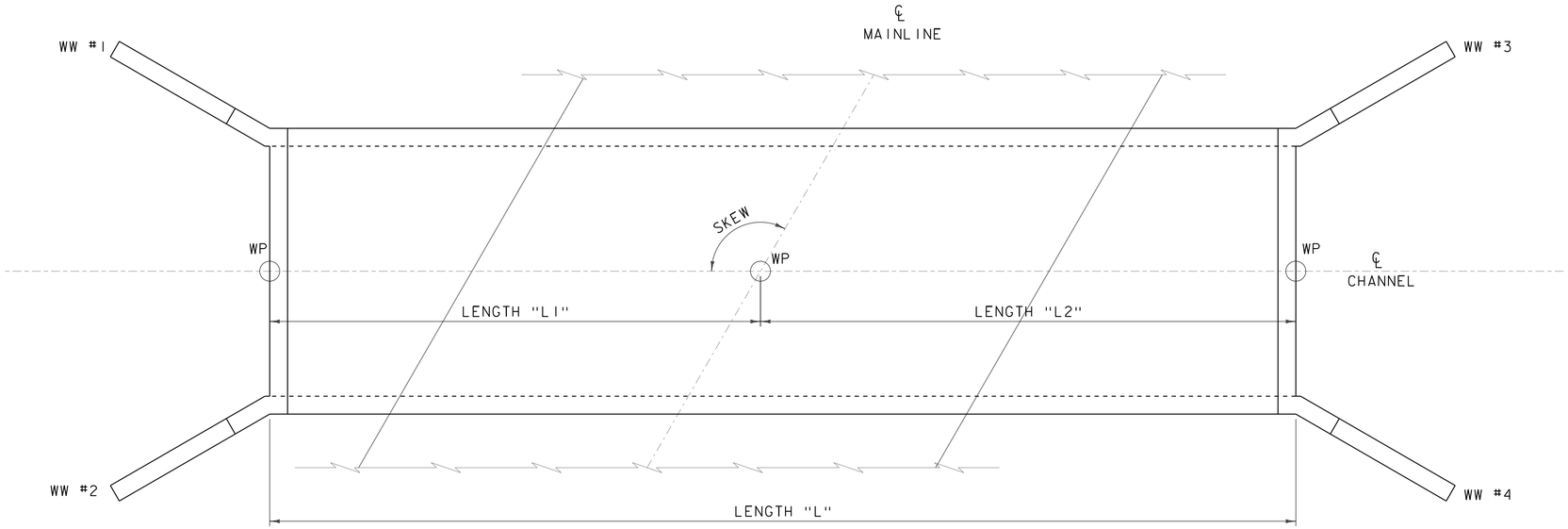


CULVERT PLAN VIEW

NOT TO SCALE

## DESIGN INFORMATION

| | |
|---|---|
| CULVERT SKEW | 90° |
| LENGTH "L" | 90'-0" |
| LENGTH "L1" | 40'-0" |
| LENGTH "L2" | 50'-0" |

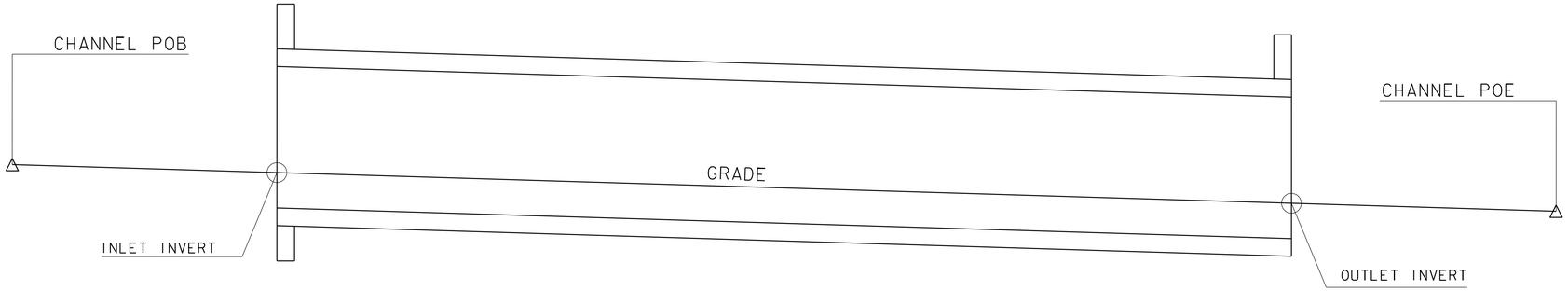


CULVERT ELEVATION VIEW

NOT TO SCALE

## CHANNEL ALIGNMENT

| | STATION | ELEVATION |
|---|---|---|
| CHANNEL POB | 50+25.00 | 557.40 |
| INLET INVERT | 50+60.00 | 556.00 |
| OUTLET INVERT | 51+50.00 | 553.75 |
| CHANNEL POE | 52+05.00 | 551.55 |

REVISIONS

# PRECAST BOX CULVERT PLAN AND ELEVATION

VERMONT AGENCY OF TRANSPORTATION
STRUCTURES - SECTION

STRUCTURES DETAIL

SD-540.10b

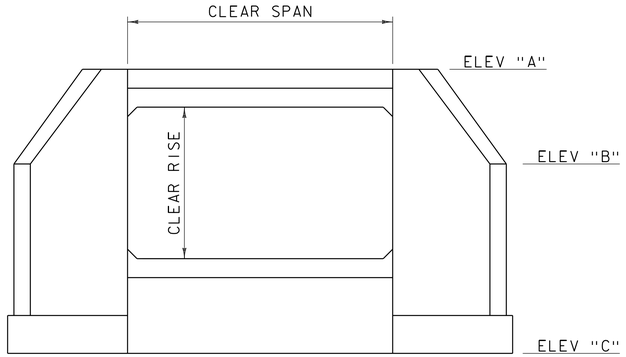


FLARED END SECTION
NOT TO SCALE

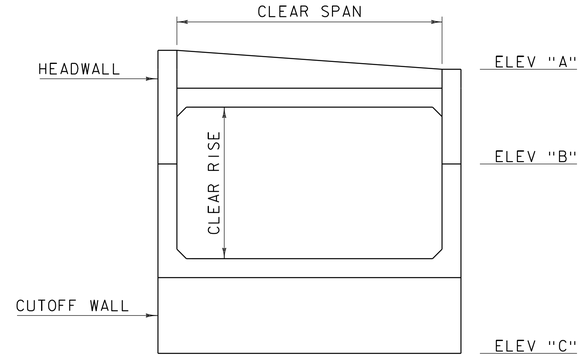


STRAIGHT END SECTION
NOT TO SCALE

BOTTOM TYPE "A" - FLAT
NOT TO SCALE

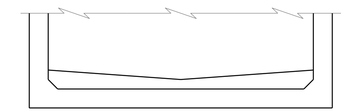

BOTTOM TYPE "B" - LOW FLOW
NOT TO SCALE

BOTTOM TYPE "C" - BAFFLE
NOT TO SCALE

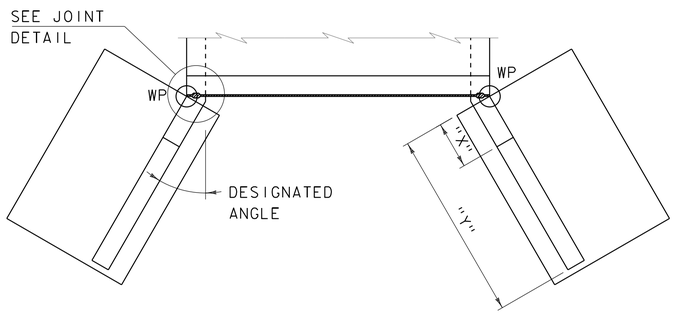


FLARED END PLAN
NOT TO SCALE

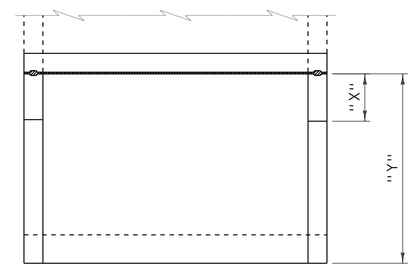


STRAIGHT END PLAN
NOT TO SCALE

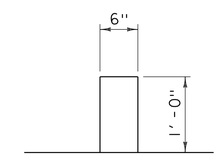


STANDARD BAFFLE
NOT TO SCALE

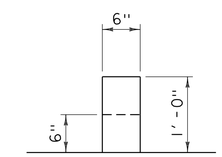


LOW FLOW BAFFLE
NOT TO SCALE

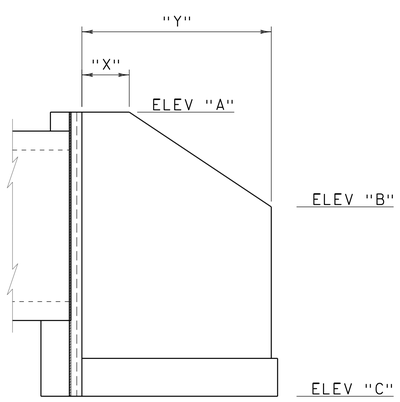


FLARED END ELEVATION
NOT TO SCALE

## DESIGN INFORMATION

| | |
|---|---|
| CLEAR SPAN | 10'-0" |
| CLEAR RISE | 7'-0" |
| END TYPE (INLET) | FLARED |
| END TYPE (OUTLET) | FLARED |
| BOTTOM TYPE | TYPE "C" |

## WINGWALL INFORMATION

| LOCATION | ANGLE | ELEV "A" | ELEV "B" | ELEV "C" | DIM "X" | DIM "Y" |
|---|---|---|---|---|---|---|
| WW #1 | 45° | 563.50 | 561.50 | 552.00 | 2'-0" | 10'-0" |
| WW #2 | 45° | 563.50 | 561.50 | 552.00 | 2'-0" | 10'-0" |
| WW #3 | 45° | 561.00 | 559.00 | 549.75 | 2'-0" | 10'-0" |
| WW #4 | 45° | 561.00 | 559.00 | 549.75 | 2'-0" | 10'-0" |

DIMENSIONS MEASURED ALONG FRONT FACE OF WINGWALL.

REVISIONS

# PRECAST BOX CULVERT END DETAILS

VERMONT AGENCY OF TRANSPORTATION
STRUCTURES - SECTION

STRUCTURES DETAIL
SD-540.10c