STATE OF VERMONT
AGENCY OF TRANSPORTATION

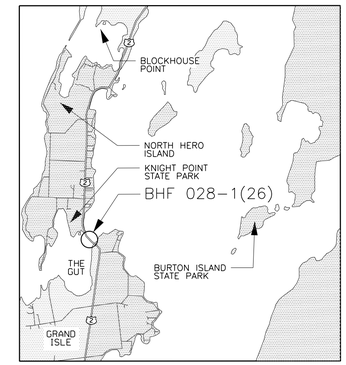

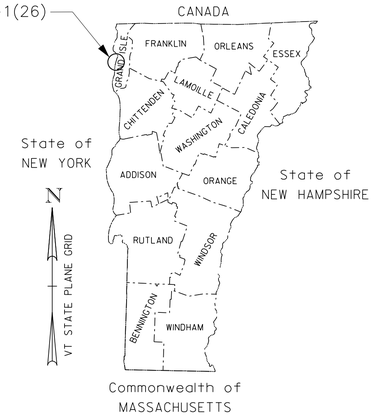

PROPOSED IMPROVEMENT
BRIDGE PROJECT

TOWN OF NORTH HERO - GRAND ISLE

COUNTY OF GRAND ISLE

ROUTE NO : US ROUTE 2 BRIDGE NO : 8

PROJECT LOCATION : BEGINS AT A POINT IN NORTH HERO 0.227 MI WEST OF THE NORTH HERO/GRANDE ISLE TOWN LINE (MIDDLE OF EXISTING BRIDGE) AND CONTINUES EASTERLY ON US 2 IN GRANDE ISLE FOR 0.303 MI.

PROJECT DESCRIPTION : REPLACEMENT OF EXISTING BRIDGE AND ASSOCIATED ROADWAY IMPROVEMENTS

LENGTH OF STRUCTURE : 259 FEET.
LENGTH OF ROADWAY : 2541 FEET.
LENGTH OF PROJECT : 2800 FEET.

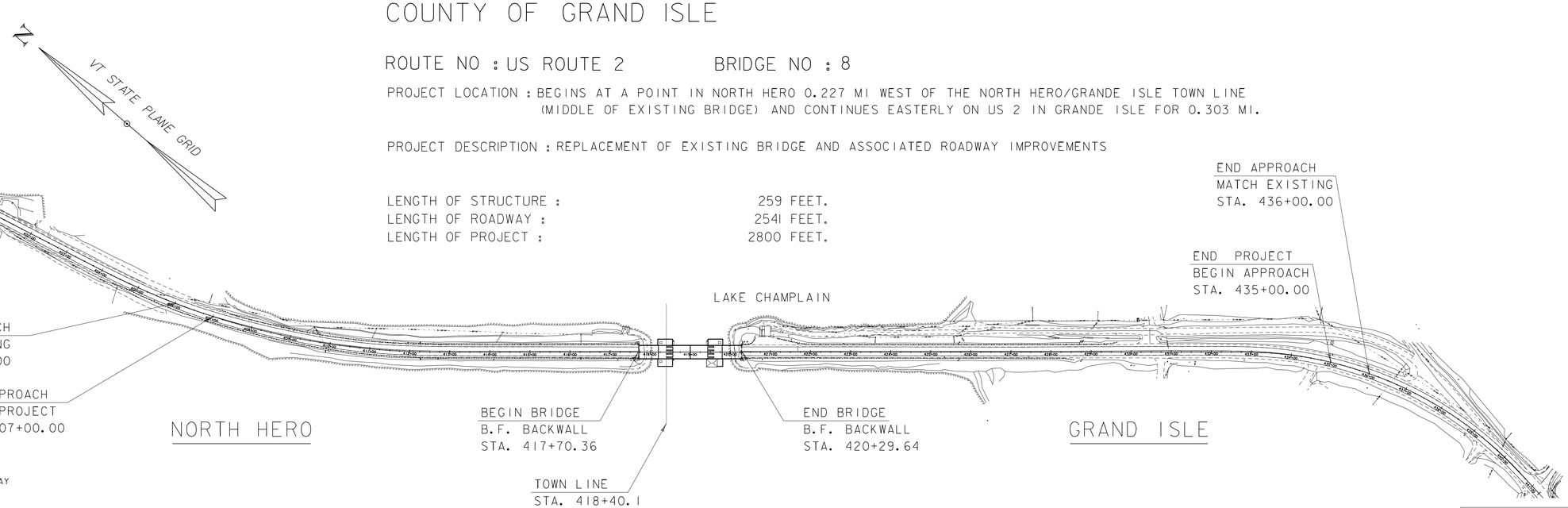

SCALE 1" = 150'-0"
150 0 150'

THESE PLANS ARE SUBJECT TO SUCH ENGINEERING CHANGES AS MAY BE REQUIRED BY THE FEDERAL HIGHWAY ADMINISTRATION OR THE DIRECTOR OF PROGRAM DEVELOPMENT.

CONSTRUCTION IS TO BE CARRIED ON IN ACCORDANCE WITH THESE PLANS AND THE STANDARD SPECIFICATIONS FOR CONSTRUCTION DATED 2011, AS APPROVED BY THE FEDERAL HIGHWAY ADMINISTRATION ON JULY 20, 2011 FOR USE ON THIS PROJECT, INCLUDING ALL SUBSEQUENT REVISIONS AND SUCH REVISED SPECIFICATIONS AND SPECIAL PROVISIONS AS ARE INCORPORATED IN THESE PLANS.

PROGRESS PLANS

QUALITY ASSURANCE PROGRAM : LEVEL

SURVEYED BY :
SURVEYED DATE :

DATUM
VERTICAL
HORIZONTAL

DEPARTMENT OF TRANSPORTATION
FEDERAL HIGHWAY ADMINISTRATOR
APPROVED _____ DATE _____

DIRECTOR OF PROGRAM DEVELOPMENT
APPROVED _____ DATE _____

PROJECT MANAGER : D. LANDRY

PROJECT NAME : NORTH HERO GRAND ISLE BRIDGE
PROJECT NUMBER : BHF 028-1(26)

SHEET 1 OF 196 SHEETS

REV2 DATE: 4/29/2016

STATE OF VERMONT
AGENCY OF TRANSPORTATION

PRELIMINARY INFORMATION SHEET (BRIDGE)

Version
LRFD

INDEX OF SHEETS

PLAN SHEETS

	1	TITLE SHEET
	2	PRELIMINARY INFORMATION SHEET
	3	BRIDGE TYPICAL SECTIONS
	4 - 7	ROADWAY TYPICAL SECTIONS
	8	BRIDGE TRAFFIC CONTROL PLAN
	9	PROJECT TRAFFIC CONTROL PLAN
	10	DEMOLITION PLAN
*	11	STRUCTURE MODIFICATIONS FOR STAGED CONSTRUCTION
	12	BORING INFORMATION SHEET 1
	13 - 20	BORING LOG SHEETS
	21 - 28	ROADWAY LAYOUT PLAN SHEETS
	29 - 36	PROFILE SHEETS
	37 - 38	SUPERELEVATION DIAGRAM SHEETS
	39 - 55	ROADWAY CROSS SECTIONS
	56	BRIDGE PLAN AND ELEVATION
	57 - 58	ABUTMENT PLAN & ELEVATION SHEETS
*	59 - 72	PIER PLAN AND ELEVATION SHEETS
	73	CONTROL HOUSE PLAN VIEWS
	74	CONTROL HOUSE CROSS SECTIONS
	75	APPROACH SPAN FRAMING PLAN
	76	APPROACH SPAN GIRDER DETAILS
	77	BASCULE SPAN FRAMING PLAN
	78	BASCULE SPAN TRANSVERSE SECTION
*	79 - 80	BASCULE SPAN JOINT DETAILS
	81 - 82	BASCULE SPAN GIRDER DETAILS
	83	BASCULE SPAN LONGITUDINAL SECTION
	84	TORQUE TUBE
	85	MAINTENANCE WALKWAY PLAN & ELEV
	86	BASCULE SPAN COUNTERWEIGHT PLAN
	87	BASCULE SPAN COUNTERWEIGHT SECTIONS
*	88	COUNTERWEIGHT PLAN & ELEVATION
*	89	COUNTERWEIGHT DETAILS
	90	BALANCE TABLE
	91	APPROACH SPAN DECK TYPICAL
*	92	COUNTERWEIGHT SPAN DECK TYPICAL
*	93	BASCULE SPAN DECK TYPICAL
	94	APPROACH SPAN JOINT DETAILS
*	95 - 97	TRUNNION SUPPORT DETAILS
*	98	SPAN LOCK DETAILS
	99	TEMPORARY BRIDGE BARRIER DETAILS
	100 - 101	BRIDGE RAIL DETAILS
*	102	BRIDGE RAIL TRANSITION
	103	MECHANICAL GENERAL NOTES
*	104	MECHANICAL BILL OF MATERIALS
	105 - 108	TEMPORARY OPERATING MACHINERY SHEETS
	109	MECHANICAL PLAN AND ELEVATION
	110	OPERATING MACHINERY ASSEMBLY
	111	CYLINDER AND CONNECTION DETAILS
*	112	HPU DETAILS
	113	HYDRAULIC SCHEMATIC
*	114	HYDRAULIC PIPE RUNS
	115	TRUNNION ASSEMBLY
	116 - 117	TRUNNION DETAILS
	118	SPAN LOCK ASSEMBLY
	119	SPAN LOCK DETAILS
*	120	LIMIT SWITCH LAYOUT
*	121	LIMIT SWITCH DETAILS
	122	ELECTRICAL PLAN & ELEVATION
	123	ELECTRICAL SITE PLAN
	124 - 127	CONSTRUCTION STAGE ELECTRICAL PLANS
	128 - 129	ONE LINE DIAGRAMS
	130 - 145	CONTROL SCHEMATICS
	146	LIMIT SWITCH DEVELOPMENT
	147	MCC LAYOUT
	148	CONTROL DESK LAYOUT
	149	CONTROL DESK DETAILS
	150 - 152	CONTROL HOUSE LAYOUTS
	153	PROPOSED TENDER HOUSE BASEMENT LAYOUT
	154	EXISTING TENDER HOUSE BASEMENT LAYOUT
	155 - 156	CONDUIT BLOCK DIAGRAMS
	157	ELECTRIC UTILITY DETAILS
*	158	FENDER DETAILS
	159 - 166	CONSTRUCTION STAGING SHEETS
*	167	CHANNEL CROSS SECTIONS
*	168	EPSC NARRATIVE SHEET
	169 - 176	EPSC EXISTING SITE PLANS
*	177 - 184	EPSC CONSTRUCTION PLAN SHEETS
*	185 - 192	EPSC FINAL SITE PLAN SHEETS
	193 - 196	EPSC DETAILS

* SOME PAGES NOT INCLUDED IN PROGRESS PLANS

STRUCTURES DETAIL SHEETS

SD-501.00	CONCRETE DETAILS AND NOTES	5/7/2010
SD-502.00	CONCRETE DETAILS AND NOTES	5/7/2010
SD-516.11a	BRIDGE EXPANSION JOINT, VERMONT	2/24/2011
SD-516.11b	BRIDGE EXPANSION JOINT, VERMONT	2/25/2011
SD-601.00	STRUCTURAL STEEL DETAILS AND NOTES	5/7/2010
SD-602.00	STRUCTURAL STEEL PLATE GIRDER DETAILS AND NOTES	5/7/2010

STANDARDS LIST

FINAL HYDRAULIC REPORT

TRAFFIC MAINTENANCE NOTES

1. MAINTAIN ONE-WAY TRAFFIC ON THE EXISTING STRUCTURE.
2. INSTALL AND MAINTAIN TRAFFIC SIGNALS.
3. SIDEWALKS ARE NOT NECESSARY

DESIGN VALUES

1. DESIGN LIVE LOAD		HL-93
2. FUTURE PAVEMENT	d_p:	0.0 INCH
3. ABUTMENT BEARING TO BEARING LENGTH (SIX SPANS) (46.80 - 25.2 - 53.1 - 53.1 - 25.2 - 46.8) FT	L:	255.2 FT
4. MIN. MID-SPAN POS. CAMBER @ RELEASE (PRESTRESSED UNITS)	Δ:	- - -
5. PRESTRESSING STRAND	f_y:	- - -
6. PRESTRESSED CONCRETE STRENGTH	f'_c:	- - -
7. PRESTRESSED CONCRETE RELEASE STRENGTH	f'_{ci}:	- - -
8. CONCRETE, HIGH PERFORMANCE CLASS AA	f'_c:	5.0 KSI
9. CONCRETE, HIGH PERFORMANCE CLASS A	f'_c:	4.0 KSI
10. CONCRETE, HIGH PERFORMANCE CLASS B	f'_c:	3.5 KSI
11. CONCRETE, CLASS C	f'_c:	3.0 KSI
12. REINFORCING STEEL	f_y:	60 KSI
13. STRUCTURAL STEEL AASHTO M270	f_y:	50 KSI
14. NOMINAL BEARING RESISTANCE OF SOIL	q_n:	- - -
15. SOIL BEARING RESISTANCE FACTOR (REFER TO AASHTO LRFD)	ϕ:	- - -
16. NOMINAL BEARING RESISTANCE OF ROCK	q_n:	- - -
17. ROCK BEARING RESISTANCE FACTOR (REFER TO AASHTO LRFD)	ϕ:	- - -
18. PILE RESISTANCE FACTOR	ϕ:	- - -
19. LATERAL PILE DEFLECTION	Δ:	- - -
20. BASIC WIND SPEED	V_{3s}:	- - -
21. MINIMUM GROUND SNOW LOAD	p_g:	- - -
22. SEISMIC DATA PGA: 0	S_s:	- - -
	S_1:	- - -
23.		
24.		- - -
25.		- - -
26.		- - -

LRFR LOAD RATING FACTORS

LOADING LEVELS	TRUCK						
	H-20	HL-93	3S2	6 AXLE	3A. STR.	4A. STR.	5A. SEMI
TONNAGE	20	36	36	66	30	34.5	38
INVENTORY							
POSTING							
OPERATING							
COMMENTS:							

AS BUILT "REBAR" DETAIL

LEVEL I	LEVEL II	LEVEL III
TYPE:	TYPE:	TYPE:
GRADE:	GRADE:	GRADE:

TRAFFIC DATA

YEAR	ADT	DHV	% D	% T	ADTT
2018	3000	460	55	2.6	150
2028	3200	490	55	3.4	210

20 year ESAL for flexible pavement from 2018 to 2038 : 1065000

40 year ESAL for flexible pavement from 2018 to 2058 : 0

Design Speed : 50 mph

PROJECT NAME: **NORTH HERO GRAND ISLE BRIDGE**

PROJECT NUMBER: **BHF 028-1(26)**

FILE NAME:	PI Sheet Builder_v008-13c.xls	PLOT DATE:	5/2/2016
PROJECT LEADER:	T. FRENCH	DRAWN BY:	P. LEFEBVRE
DESIGNED BY:	P.LEFEBVRE	CHECKED BY:	J. MURPHY
PRELIMINARY INFORMATION SHEET 1		SHEET 2	OF 196

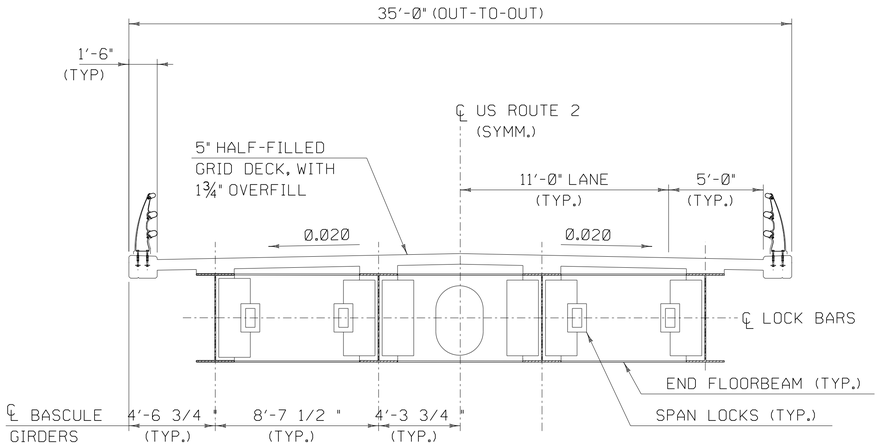

SECTION AT BASCULE SPAN

SCALE ¼" = 1'-0"

4' 0 4'

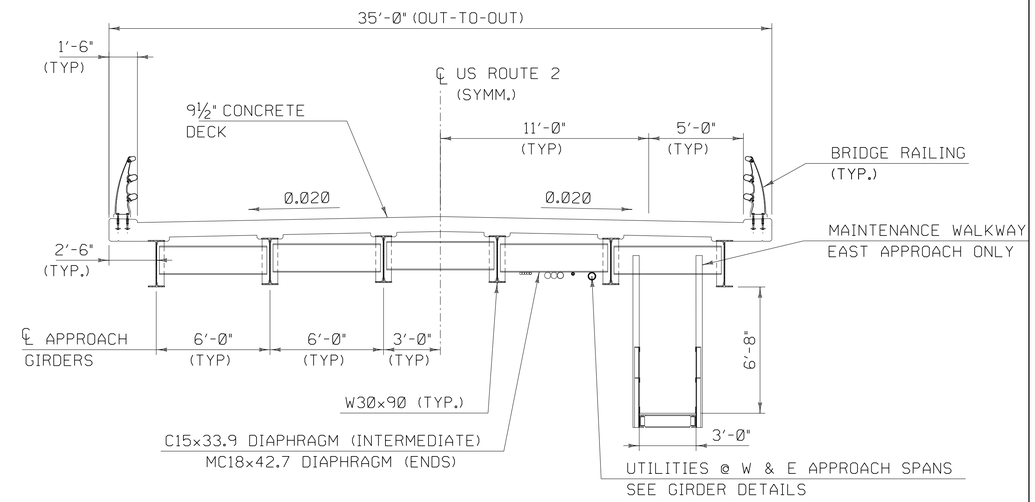

SECTION AT APPROACH SPAN

SCALE ¼" = 1'-0"

4' 0 4'

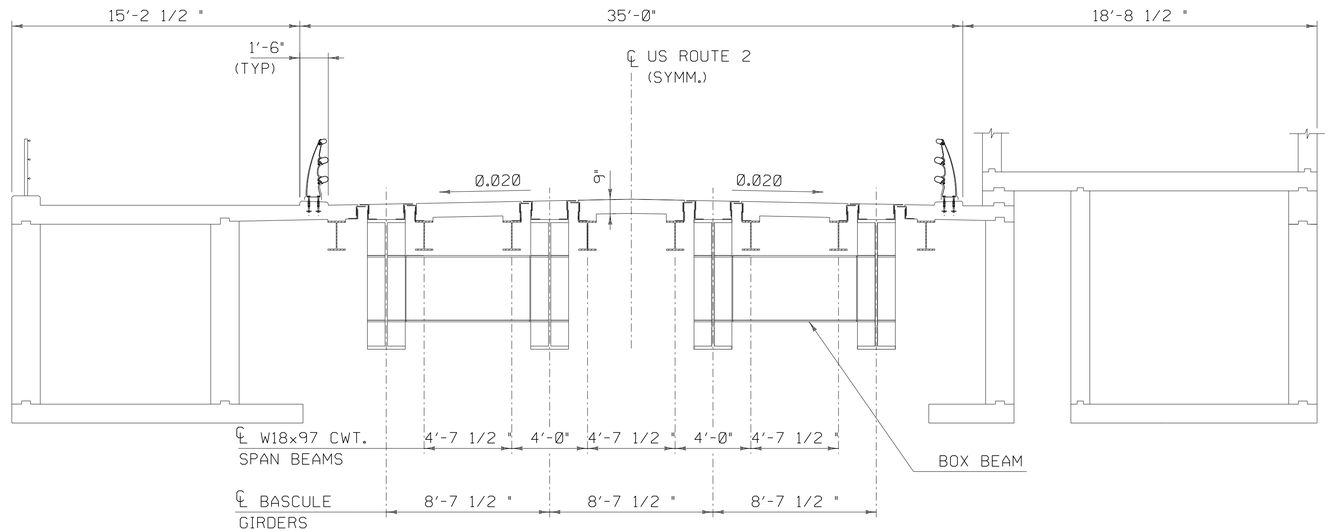

SECTION AT COUNTERWEIGHT SPAN

SCALE ¼" = 1'-0"

4' 0 4'

PROGRESS PLANS

PROJECT NAME: NORTH HERO GRAND ISLE BRIDGE
PROJECT NUMBER: BHF 028-1(26)

FILE NAME: z12b142deckxs.dgn
PROJECT LEADER: T. FRENCH
DESIGNED BY: H. PROTIN
BRIDGE TYPICAL SECTIONS

PLOT DATE: 4/25/2016
DRAWN BY: P. MONTICCIOLO
CHECKED BY: P. DAVIS
SHEET 3 OF 196

MATERIAL TOLERANCES (IF USED ON PROJECT)	
SURFACE	
- PAVEMENT COURSES (TOTAL DEPTH)	+/- 1/4"
- AGGREGATE SURFACE COURSE	+/- 1/2"
SUBBASE	+/- 1"
SAND BORROW	+/- 1"

TYPICAL ROADWAY SECTION
US ROUTE 2

1 1/2" SUPERPAVE BITUMINOUS CONCRETE PAVEMENT TYPE IVS
2" SUPERPAVE BITUMINOUS CONCRETE PAVEMENT TYPE IIS
2 1/2" SUPERPAVE BITUMINOUS CONCRETE PAVEMENT TYPE IS
18" SUBBASE OF DENSE GRADED CRUSHED STONE
24" SAND BORROW

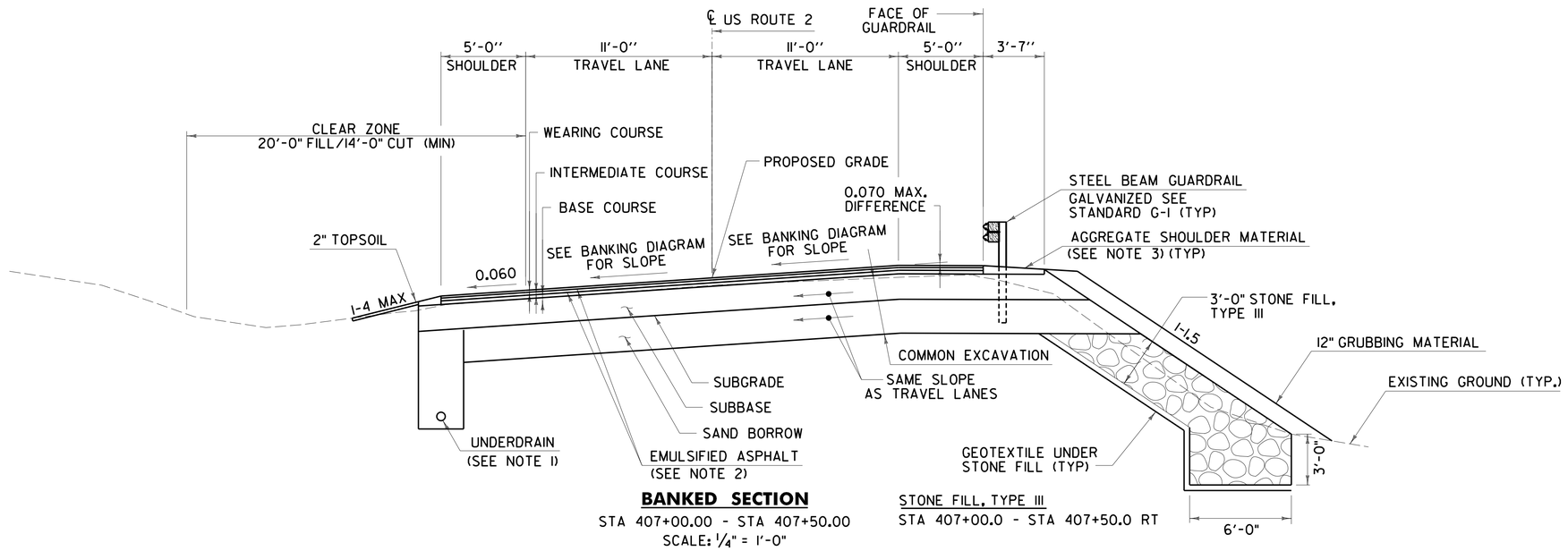

BANKED SECTION
STA 407+00.00 - STA 407+50.00
SCALE: 1/4" = 1'-0"

STONE FILL, TYPE III
STA 407+00.0 - STA 407+50.0 RT

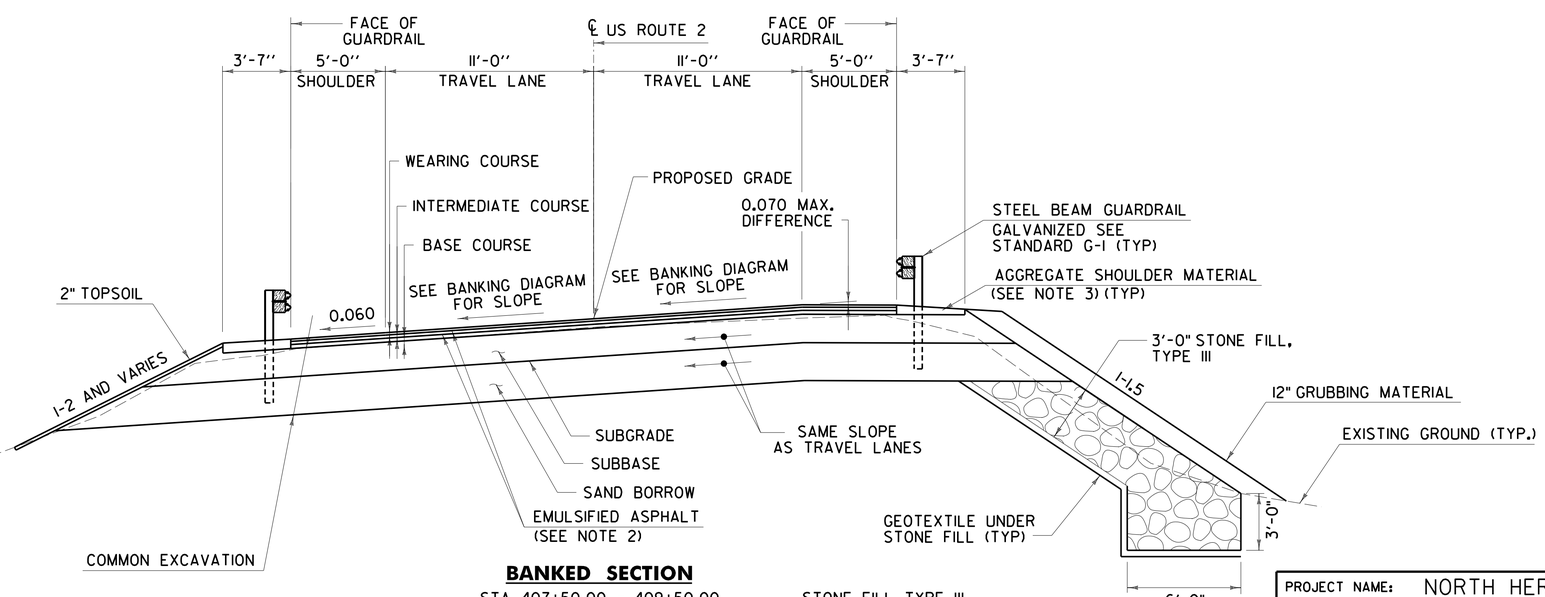

BANKED SECTION
STA 407+50.00 - 409+50.00
SCALE: 1/4" = 1'-0"

STONE FILL, TYPE III
STA 407+50.0 - STA 409+25.0 RT

NOTES:

1. INSTALL 6" UNDERDRAIN AS SHOWN ON THE PLANS OR AS DIRECTED BY THE ENGINEER. SEE STD D-30 FOR CONSTRUCTION DETAILS.
2. TACK COAT APPLICATION RATE SHALL BE 0.025 TO 0.040 GAL/SQ.YD OF CRS-1H OR RS-1H.
3. ALL EDGES OF PAVEMENT SHALL BE BACKED UP TO FULL HEIGHT WITH AGGREGATE SHOULDER MATERIAL AS DIRECTED BY THE ENGINEER.

PROGRESS PLANS

PROJECT NAME: NORTH HERO GRAND ISLE BRIDGE
PROJECT NUMBER: BHF 028-1(26)

FILE NAME: z12b142typ.dgn	PLOT DATE: 4/29/2016
PROJECT LEADER: D. GOZALKOWSKI	DRAWN BY: A. KIRBY
DESIGNED BY: J. PARRELLI	CHECKED BY: J. SHIELDS
ROADWAY TYPICAL SECTION SHEET 1	SHEET 4 OF 196

CHA

FILE NAME = V:\Projects\ANY\K3\28173\CADD_MSTN\12b142\Consultants\z12b142typ.dgn
DATE/TIME = 4/29/2016
USER = 5237

MATERIAL TOLERANCES (IF USED ON PROJECT)	
SURFACE	
- PAVEMENT COURSES (TOTAL DEPTH)	+/- 1/4"
- AGGREGATE SURFACE COURSE	+/- 1/2"
SUBBASE	+/- 1"
SAND BORROW	+/- 1"

TYPICAL ROADWAY SECTION
US ROUTE 2

1 1/2" SUPERPAVE BITUMINOUS CONCRETE PAVEMENT TYPE IVS
2" SUPERPAVE BITUMINOUS CONCRETE PAVEMENT TYPE IIS
2 1/2" SUPERPAVE BITUMINOUS CONCRETE PAVEMENT TYPE IS
18" SUBBASE OF DENSE GRADED CRUSHED STONE
24" SAND BORROW

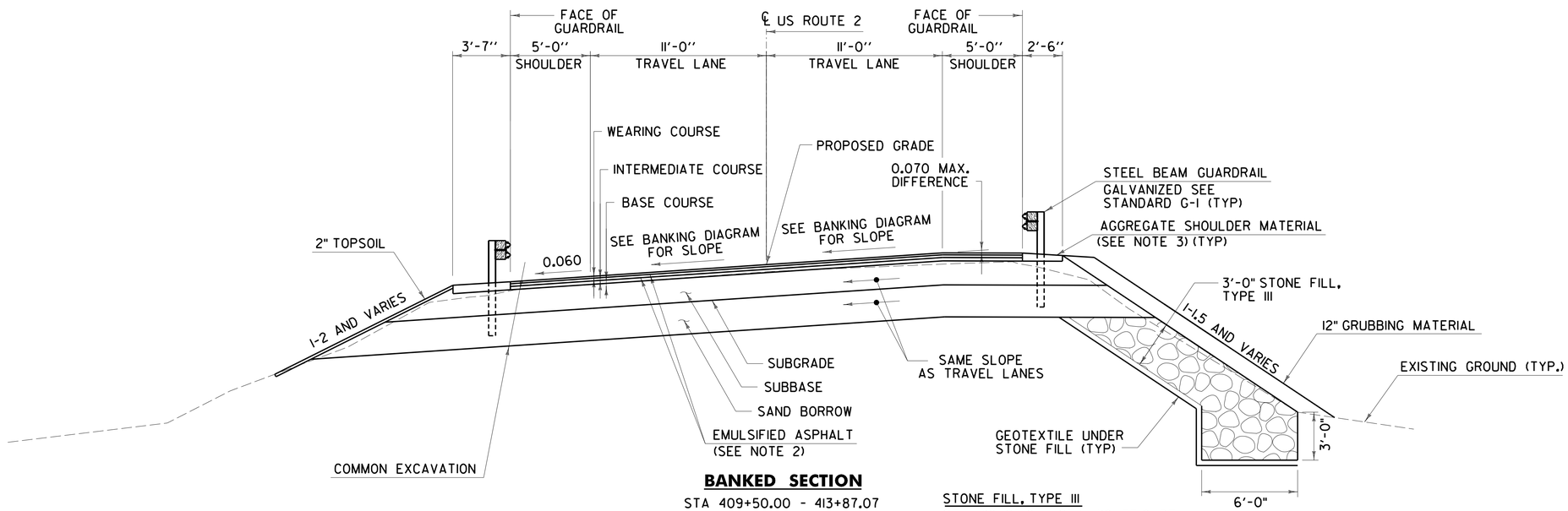

BANKED SECTION
STA 409+50.00 - 413+87.07
SCALE: 1/4" = 1'-0"

STONE FILL, TYPE III
STA 410+25.0 - STA 410+75.0 RT

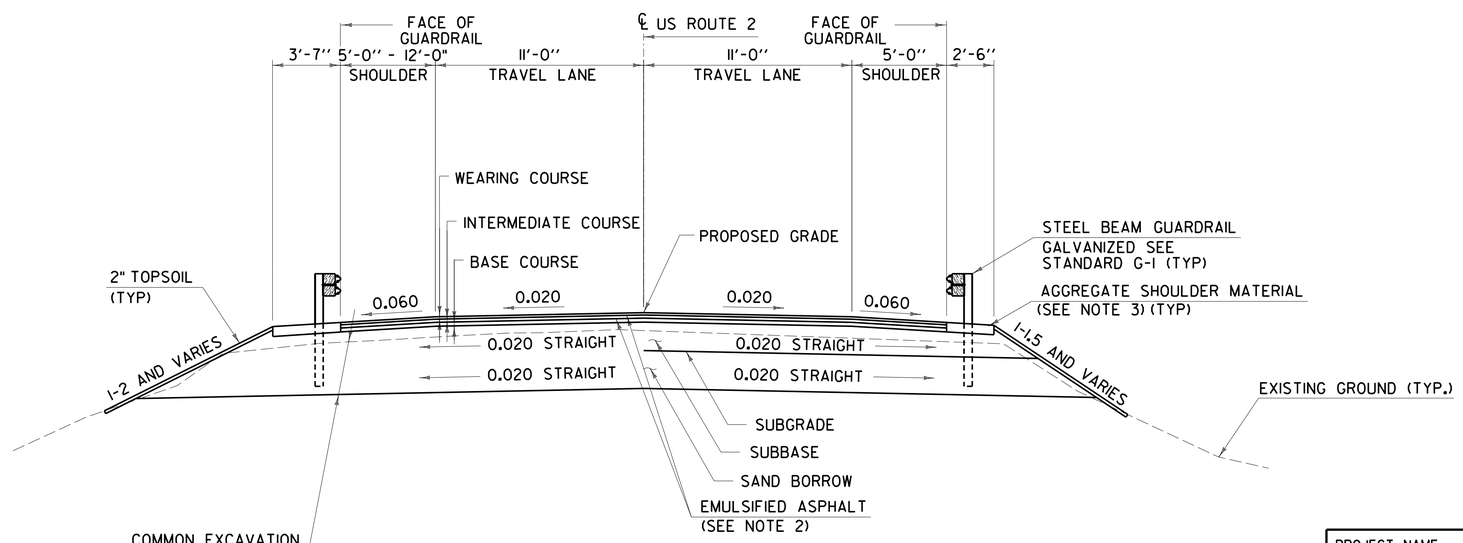

NORMAL SECTION
STA 413+87.07 - STA 417+70.36
SCALE: 1/4" = 1'-0"

NOTES:

1. INSTALL 6" UNDERDRAIN AS SHOWN ON THE PLANS OR AS DIRECTED BY THE ENGINEER. SEE STD D-30 FOR CONSTRUCTION DETAILS.
2. TACK COAT APPLICATION RATE SHALL BE 0.025 TO 0.040 GAL/SQ.YD OF CRS-1H OR RS-1H.
3. ALL EDGES OF PAVEMENT SHALL BE BACKED UP TO FULL HEIGHT WITH AGGREGATE SHOULDER MATERIAL AS DIRECTED BY THE ENGINEER.

PROGRESS PLANS

PROJECT NAME: NORTH HERO GRAND ISLE BRIDGE
PROJECT NUMBER: BHF 028-1(26)

FILE NAME: zl2bl42typ.dgn
PROJECT LEADER: D. GOZALKOWSKI
DESIGNED BY: J. PARRELLI
ROADWAY TYPICAL SECTION SHEET 2
PLOT DATE: 4/29/2016
DRAWN BY: A. KIRBY
CHECKED BY: J. SHIELDS
SHEET 5 OF 196

CHA

FILE NAME = V:\Projects\ANY\K3\28173\CADD_MSTN\12bl42\Consultants\zl2bl42typ.dgn
DATE/TIME = 4/29/2016
USER = 5237

MATERIAL TOLERANCES (IF USED ON PROJECT)	
SURFACE	
- PAVEMENT COURSES (TOTAL DEPTH)	+/- 1/4"
- AGGREGATE SURFACE COURSE	+/- 1/2"
SUBBASE	+/- 1"
SAND BORROW	+/- 1"

TYPICAL ROADWAY SECTION
US ROUTE 2

1 1/2" SUPERPAVE BITUMINOUS CONCRETE PAVEMENT TYPE IVS
2" SUPERPAVE BITUMINOUS CONCRETE PAVEMENT TYPE IIS
2 1/2" SUPERPAVE BITUMINOUS CONCRETE PAVEMENT TYPE IS
18" SUBBASE OF DENSE GRADED CRUSHED STONE
24" SAND BORROW

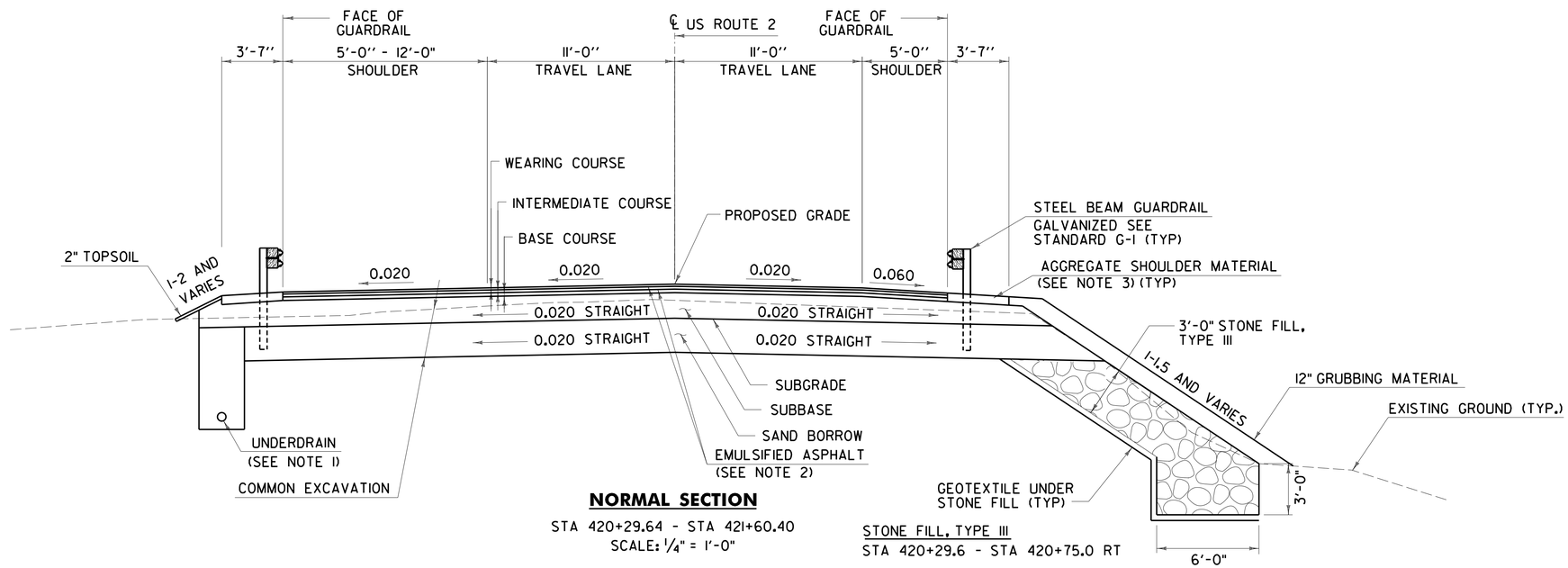

NORMAL SECTION

STA 420+29.64 - STA 421+60.40
SCALE: 1/4" = 1'-0"

STONE FILL, TYPE III
STA 420+29.6 - STA 420+75.0 RT

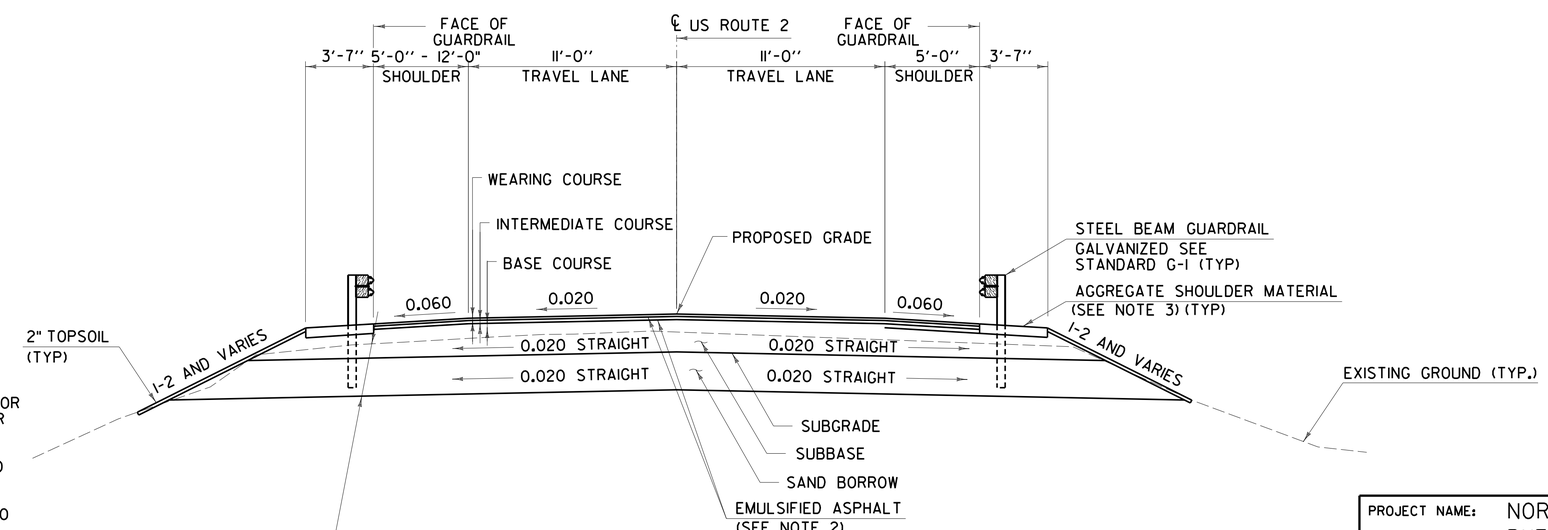

NORMAL SECTION

STA 421+60.40 - STA 429+00.00
SCALE: 1/4" = 1'-0"

NOTES:

1. INSTALL 6" UNDERDRAIN AS SHOWN ON THE PLANS OR AS DIRECTED BY THE ENGINEER. SEE STD D-30 FOR CONSTRUCTION DETAILS.
2. TACK COAT APPLICATION RATE SHALL BE 0.025 TO 0.040 GAL/SQ.YD OF CRS-1H OR RS-1H.
3. ALL EDGES OF PAVEMENT SHALL BE BACKED UP TO FULL HEIGHT WITH AGGREGATE SHOULDER MATERIAL AS DIRECTED BY THE ENGINEER.

PROGRESS PLANS

PROJECT NAME: NORTH HERO GRAND ISLE BRIDGE
PROJECT NUMBER: BHF 028-1(26)

FILE NAME: z12b142typ.dgn
PROJECT LEADER: D. GOZALKOWSKI
DESIGNED BY: J. PARRELLI
ROADWAY TYPICAL SECTION SHEET 3
PLOT DATE: 4/29/2016
DRAWN BY: A. KIRBY
CHECKED BY: J. SHIELDS
SHEET 6 OF 196

CHA

FILE NAME = V:\Projects\ANY\K3\28173\CADD_MSTN\12b142\Consultants\z12b142typ.dgn
DATE/TIME = 4/29/2016
USER = 5237

MATERIAL TOLERANCES (IF USED ON PROJECT)	
SURFACE	
- PAVEMENT COURSES (TOTAL DEPTH)	±1/4"
- AGGREGATE SURFACE COURSE	±1/2"
SUBBASE	± 1"
SAND BORROW	± 1"

TYPICAL ROADWAY SECTION
US ROUTE 2

1 1/2" SUPERPAVE BITUMINOUS CONCRETE PAVEMENT TYPE IVS
2" SUPERPAVE BITUMINOUS CONCRETE PAVEMENT TYPE IIS
2 1/2" SUPERPAVE BITUMINOUS CONCRETE PAVEMENT TYPE IS
18" SUBBASE OF DENSE GRADED CRUSHED STONE
24" SAND BORROW

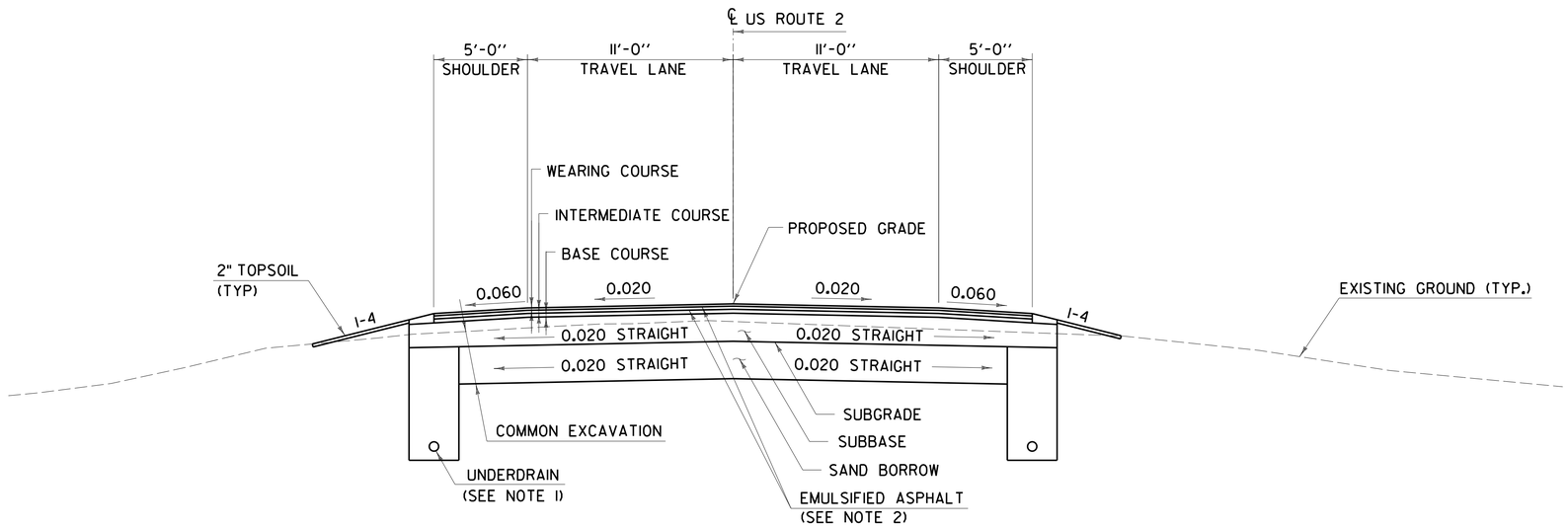

NORMAL SECTION

STA 429+00 - STA 431+16.87
SCALE: 1/4" = 1'-0"

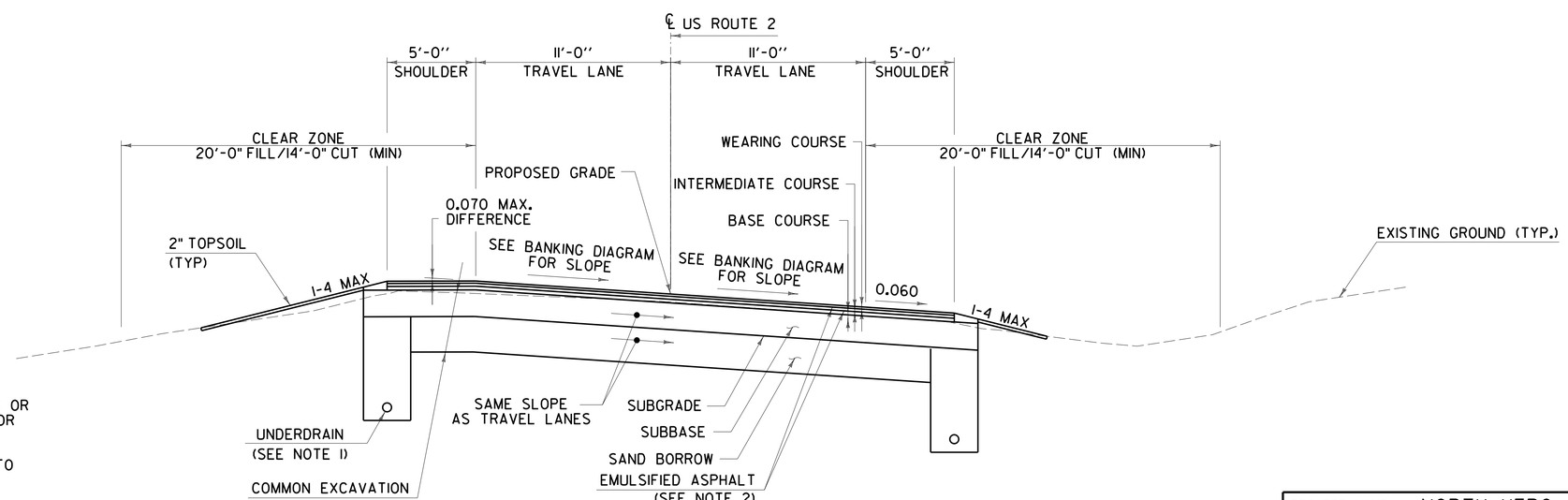

BANKED SECTION

STA 431+16.87 - STA 435+00.00
SCALE: 1/4" = 1'-0"

NOTES:

1. INSTALL 6" UNDERDRAIN AS SHOWN ON THE PLANS OR AS DIRECTED BY THE ENGINEER. SEE STD D-30 FOR CONSTRUCTION DETAILS.
2. TACK COAT APPLICATION RATE SHALL BE 0.025 TO 0.040 GAL/SQ.YD OF CRS-1H OR RS-1H.
3. ALL EDGES OF PAVEMENT SHALL BE BACKED UP TO FULL HEIGHT WITH AGGREGATE SHOULDER MATERIAL AS DIRECTED BY THE ENGINEER.

PROGRESS PLANS

PROJECT NAME: NORTH HERO GRAND ISLE BRIDGE
PROJECT NUMBER: BHF 028-1(26)

FILE NAME: z12b142typ.dgn	PLOT DATE: 4/29/2016
PROJECT LEADER: D. GOZALKOWSKI	DRAWN BY: A. KIRBY
DESIGNED BY: J. PARRELLI	CHECKED BY: J. SHIELDS
ROADWAY TYPICAL SECTION SHEET 4	SHEET 7 OF 196

CHA

FILE NAME = V:\Projects\ANY\K3\28173\CADD_MSTN\12b142\Consultants\z12b142typ.dgn
DATE/TIME = 4/29/2016
USER = 5237

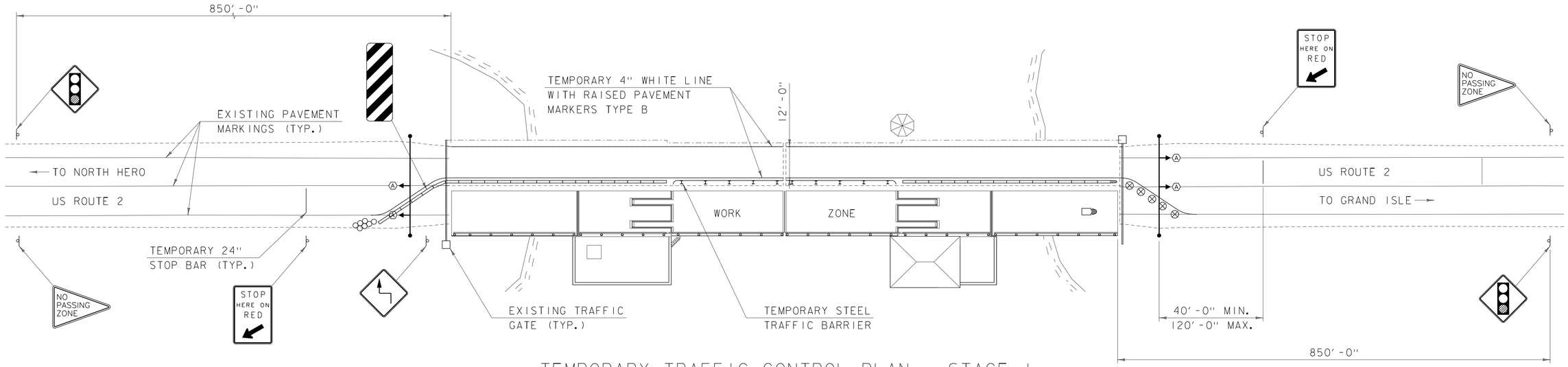

TEMPORARY TRAFFIC CONTROL PLAN - STAGE 1

SCALE: NTS

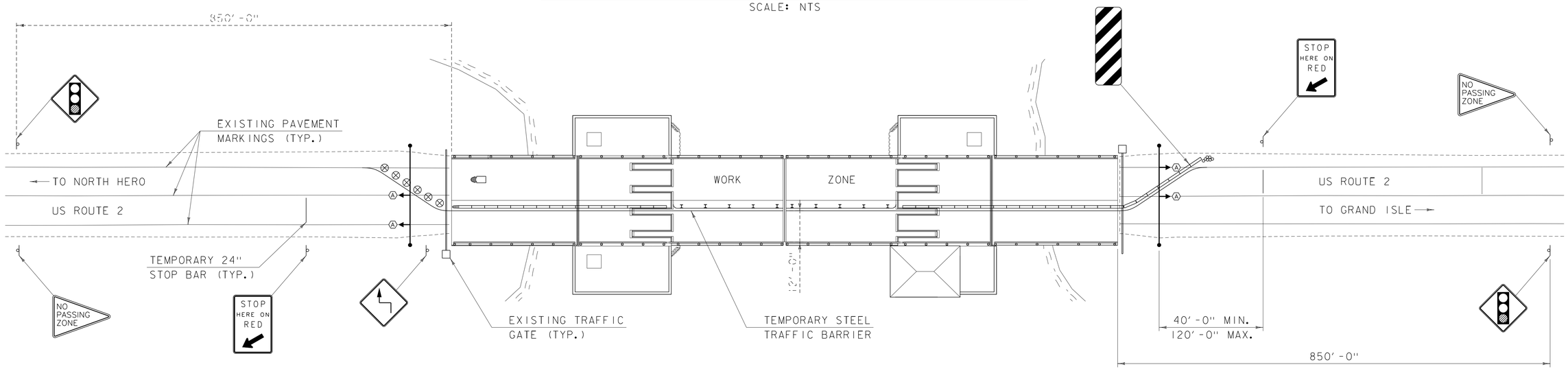

TEMPORARY TRAFFIC CONTROL PLAN - STAGE 2

SCALE: NTS

PROGRESS PLANS

PROJECT NAME: NORTH HERO GRAND ISLE BRIDGE	
PROJECT NUMBER: BHF 028-1(26)	
FILE NAME: z12b142traffic.dgn	PLOT DATE: 4/25/2016
PROJECT LEADER: T. FRENCH	DRAWN BY: P. LEFEBVRE
DESIGNED BY: C. SWANSON	CHECKED BY: J. MURPHY
BRIDGE TRAFFIC CONTROL PLAN	SHEET 8 OF 196

NOTES:

1. ALL DISTANCES SHOWN ARE DESIRABLE MINIMUMS. FIELD CONDITIONS SHALL CONTROL THE ACTUAL PLACEMENT OF CONSTRUCTION SIGNS. SEE VAOT STD. T-10 FOR ADDITIONAL SIGN PLACEMENT DETAILS. PROPOSED CONSTRUCTION SIGNS SHALL NOT INTERFERE WITH THE SIGHT LINES TO EXISTING SIGNS. PROPOSED SIGNS SHALL BE LOCATED A MINIMUM OF 100 FEET FROM THE NEAREST EXISTING OR PROPOSED SIGN. EXACT SIGN LOCATIONS SHALL BE APPROVED BY THE ENGINEER.
2. CONSTRUCTION SIGNING AND ALL TEMPORARY TRAFFIC CONTROL MEASURES SHALL BE IN ACCORDANCE WITH SECTION 6 OF THE LATEST EDITION OF THE MANUAL ON UNIFORM TRAFFIC CONTROL DEVICES (MUTCD).
3. CONSTRUCTION SIGNS SHALL BE IN NEW OR LIKE NEW CONDITION PER VAOT STANDARDS.
4. CONSTRUCTION SIGNS SHALL BE OF THE SIZES SHOWN ON THE PLAN WITH BLACK LEGENDS ON FLUORESCENT ORANGE BACKGROUNDS. LEAD SIGN (W20-1) SHALL BE ASTM D4956 TYPE VIII FLUORESCENT ORANGE SHEET.
5. PAYMENT FOR THE INSTALLATION, MAINTENANCE, AND REMOVAL OF ALL CONSTRUCTION SIGNING WILL BE MADE UNDER ITEM 900.645 SPECIAL PROVISION (TRAFFIC CONTROL, ALL INCLUSIVE).
6. ALL SIGN STANDS AND POST INSTALLATIONS SHALL BE NATIONAL COOPERATIVE HIGHWAY RESEARCH PROGRAM REPORT (NCHRP) 350 COMPLIANT.
7. THE CONTRACTOR SHALL COVER OR REMOVE ANY SIGNS THAT CONTRADICT TEMPORARY TRAFFIC CONTROL SIGNS. ALL SIGNS REMOVED OR COVERED BY THE CONTRACTOR SHALL BE REPLACED OR UNCOVERED BY THE CONTRACTOR WHEN THE TRAFFIC CONTROL PLAN IS DISASSEMBLED. PAYMENT FOR THIS WORK SHALL BE CONSIDERED INCIDENTAL TO ITEM 900.645 SPECIAL PROVISION (TRAFFIC CONTROL, ALL INCLUSIVE). ANY DAMAGE TO EXISTING SIGNS BY THE CONTRACTOR SHALL BE REPLACED BY THE CONTRACTOR WITH NO ADDITIONAL COMPENSATION.
8. THE CONTRACTOR SHALL SUBMIT SITE SPECIFIC TRAFFIC CONTROL PLANS FOR ALL PHASES OF WORK TO BE APPROVED BY THE ENGINEER. THIS WORK SHALL BE INCLUDED UNDER ITEM 900.645 SPECIAL PROVISION (TRAFFIC CONTROL, ALL INCLUSIVE). THESE TRAFFIC CONTROL PLANS SHALL BE USED BY THE CONTRACTOR THROUGHOUT THE DURATION OF THE PROJECT.

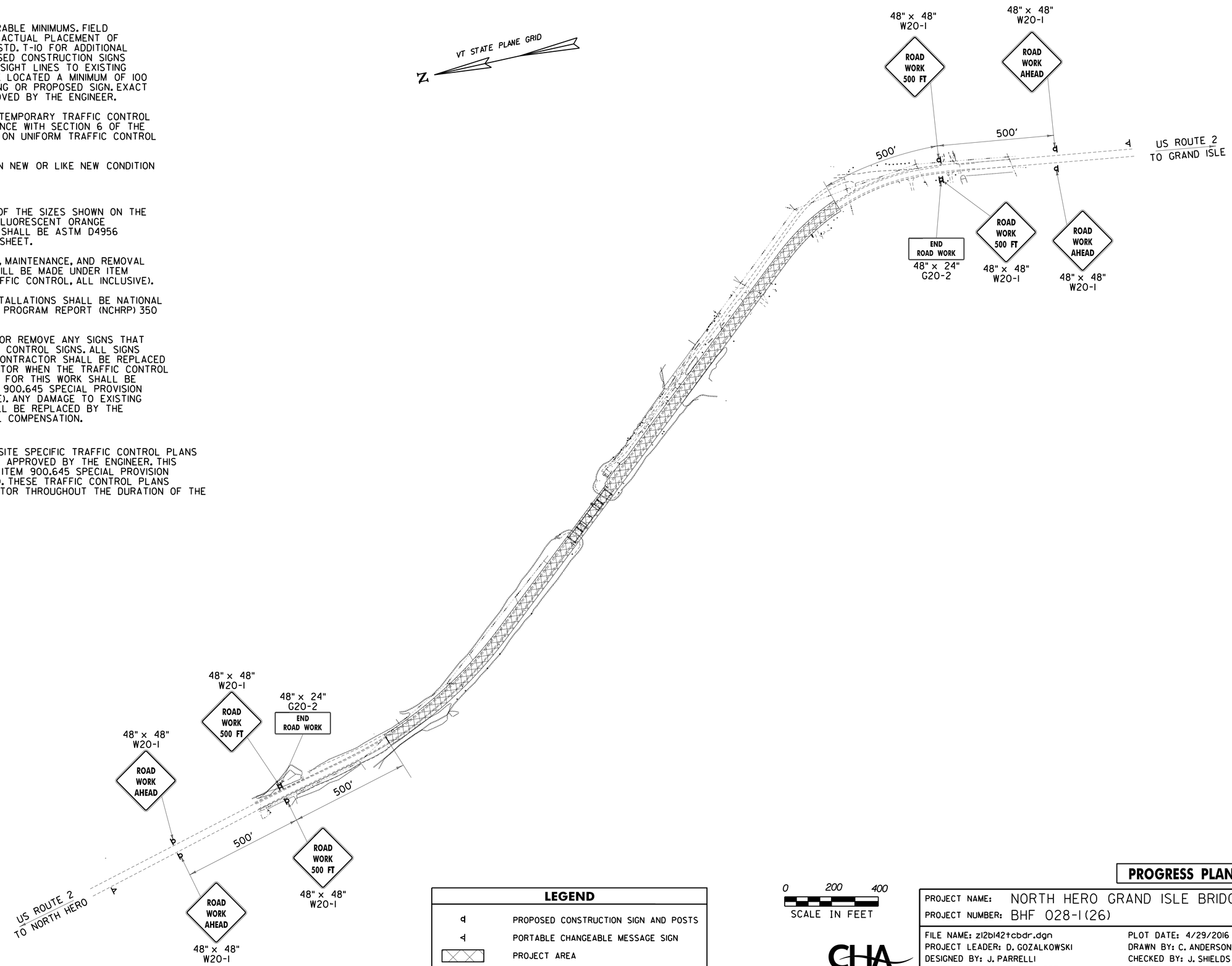

LEGEND	
	PROPOSED CONSTRUCTION SIGN AND POSTS
	PORTABLE CHANGEABLE MESSAGE SIGN
	PROJECT AREA

0 200 400
SCALE IN FEET

CHA

PROGRESS PLANS

PROJECT NAME: NORTH HERO GRAND ISLE BRIDGE
PROJECT NUMBER: BHF 028-1(26)

FILE NAME: z12b142tcbdr.dgn	PLOT DATE: 4/29/2016
PROJECT LEADER: D. GOZALKOWSKI	DRAWN BY: C. ANDERSON
DESIGNED BY: J. PARRELLI	CHECKED BY: J. SHIELDS
TRAFFIC CONTROL PLAN SHEET	SHEET 9 OF 196

FILE NAME = V:\Projects\ANY\K3\28173\CADD_MSTN\12b142\Consultants\z12b142tcbdr.dgn
DATE/TIME = 4/29/2016
USER = 5237

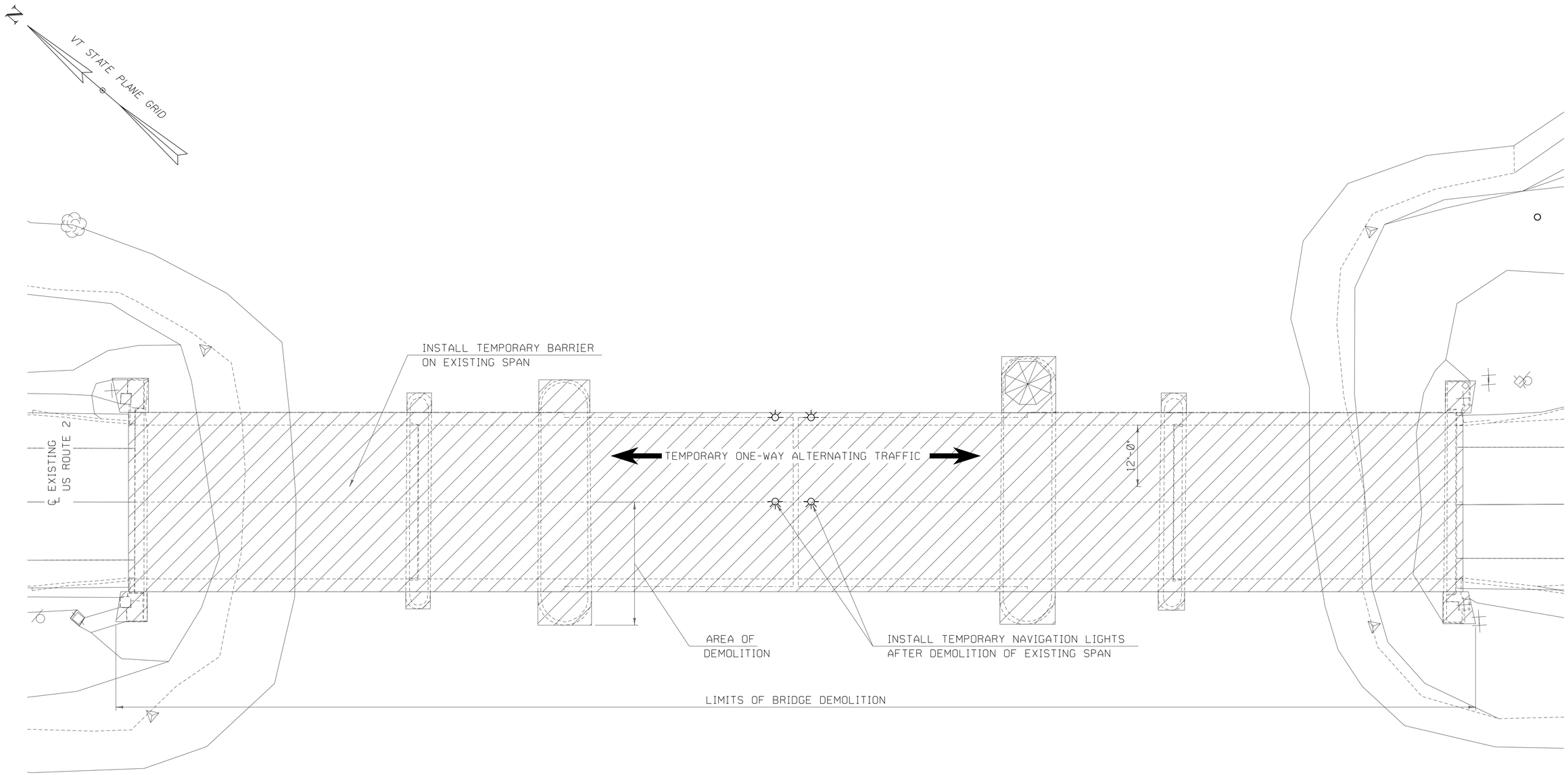

DEMOLITION PLAN

SCALE 1" = 10'-0"

10 0 10

PROGRESS PLANS

PROJECT NAME: NORTH HERO GRAND ISLE BRIDGE	
PROJECT NUMBER: BHF 028-1(26)	
FILE NAME: z12b142demopl.dgn	PLOT DATE: 4/25/2016
PROJECT LEADER: T. FRENCH	DRAWN BY: P. MONTICCIOLO
DESIGNED BY: H. PROTIN	CHECKED BY: P. DAVIS
DEMOLITION PLAN	SHEET 10 OF 196

SOIL CLASSIFICATION

AASHTO

A1	Gravel and Sand
A3	Fine Sand
A2	Silty or Clayey Gravel and Sand
A4	Silty Soil - Low Compressibility
A5	Silty Soil - Highly Compressible
A6	Clayey Soil - Low Compressibility
A7	Clayey Soil - Highly Compressible

ROCK QUALITY DESIGNATION

R.Q.D. (%)	ROCK DESCRIPTION
<25	Very Poor
25 to 50	Poor
51 to 75	Fair
76 to 90	Good
>90	Excellent

SHEAR STRENGTH

UNDRAINED SHEAR STRENGTH IN P.S.F.	CONSISTENCY
<250	Very Soft
250-500	Soft
500-1000	Med. Stiff
1000-2000	Stiff
2000-4000	Very Stiff
>4000	Hard

CORRELATION GUIDE OF "N" TO DENSITY/CONSISTENCY

DENSITY (GRANULAR SOILS)

N	DESCRIPTIVE TERM
<5	Very Loose
5-10	Loose
11-24	Med. Dense
25-50	Dense
>50	Very Dense

CONSISTENCY (COHESIVE SOILS)

N	DESCRIPTIVE TERM
<2	Very Soft
2-4	Soft
5-8	Med. Stiff
9-15	Stiff
16-30	Very Stiff
31-60	Hard
>60	Very Hard

COMMONLY USED SYMBOLS

▼	Water Elevation
⊗	Standard Penetration Boring
⊕	Auger Boring
⊙	Rod Sounding
S	Sample
N	Standard Penetration Test Blow Count Per Foot For: 2" O.D. Sampler 1 3/8" I.D. Sampler Hammer Weight Of 140 Lbs. Hammer Fall Of 30"
VS	Field Vane Shear Test
US	Undisturbed Soil Sample
B	Blast
DC	Diamond Core
MD	Mud Drill
WA	Wash Ahead
HSA	Hollow Stem Auger
AX	Core Size 1 1/8"
BX	Core Size 1 5/8"
NX	Core Size 2 1/8"
M	Double Tube Core Barrel Used
LL	Liquid Limit
PL	Plastic Limit
PI	Plasticity Index
NP	Non Plastic
w	Moisture Content (Dry Wgt. Basis)
D	Dry
M	Moist
MTW	Moist To Wet
W	Wet
Sat	Saturated
Bo	Boulder
Gr	Gravel
Sa	Sand
Si	Silt
Cl	Clay
HP	Hardpan
Le	Ledge
NLTD	No Ledge To Depth
CNPF	Can Not Penetrate Further
TLOB	Top of Ledge Or Boulder
NR	No Recovery
Rec.	Recovery
%Rec.	Percent Recovery
RQD	Rock Quality Designation
CBR	California Bearing Ratio
<	Less Than
>	Greater Than
R	Refusal (N > 100)
VTSPG	NAD83 - See Note 7

COLOR

blk	Black	pnk	Pink
bl	Blue	pu	Purple
brn	Brown	rd	Red
dk	Dark	tn	Tan
gry	Gray	wh	White
gn	Green	yel	Yellow
lt	Light	mltc	Multicolored
or	Orange		

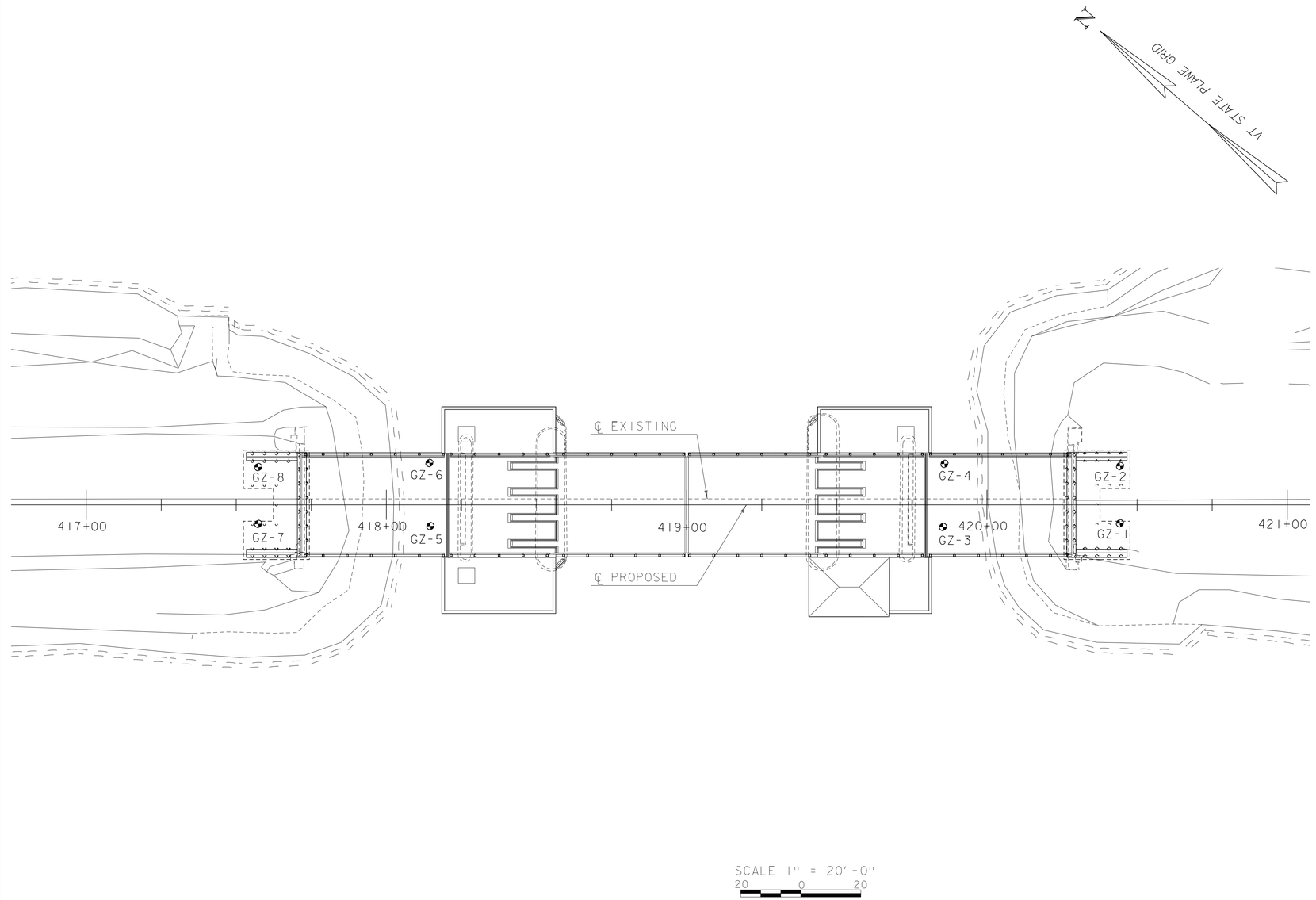

DEFINITIONS (AASHTO)

BEDROCK (LEDGE) - Rock in its native location of indefinite thickness.

BOULDER - A rock fragment with an average dimension > 12 inches.

COBBLE - Rock fragments with an average dimension between 3 and 12 inches.

GRAVEL - Rounded particles of rock < 3" and > 0.0787" (#10 sieve).

SAND - Particles of rock < 0.0787" (#10 sieve) and > 0.0029" (#200 sieve).

SILT - Soil < 0.0029" (#200 sieve), non or slightly plastic and exhibits no strength when air-dried.

CLAY - Fine grained soil, exhibits plasticity when moist and considerable strength when air-dried.

VARVED - Alternate layers of silt and clay.

HARDPAN - Extremely dense soil, cemented layer, not softened when wet.

MUCK - Soft organic soil (containing > 10% organic material.

MOISTURE CONTENT - Weight of water divided by dry weight of soil.

FLOWING SAND - Granular soil so saturated (loose) that it flows into drill casing during extraction of wash rod.

STRIKE - Angle from magnetic north to line of intersection of bed with a horizontal plane.

DIP - Inclination of bed with a horizontal plane.

GENERAL NOTES

1. The subsurface explorations shown herein were made between 07/27/2015 and 08/05/2015 by GZA.

2. Soil and rock classifications, properties and descriptions are based on engineering interpretation from available subsurface information by the Agency and may not necessarily reflect actual variations in subsurface conditions that may be encountered between individual boring or sample locations.

3. Observed water levels and/or conditions indicated are as recorded at the time of exploration and may vary according to the prevailing rainfall, methods of exploration and other factors.

4. Engineering judgment was exercised in preparing the subsurface information presented herein. Analysis and interpretation of subsurface data was performed and interpreted for Agency design and estimating purposes. Presentation of the information in the Contract is intended to provide the Contractor access to the same data available to the Agency. The subsurface information is presented in good faith and is not intended as a substitute for personal investigation, independent interpretation, independent analysis or judgment by the Contractor.

5. Pictorial structure details shown on the boring plan layout or soils profile are for illustrative purposes only and may not accurately portray final contract details.

6. Terminology used on boring logs to describe the hardness, degree of weathering, and spacing of fractures, joints and other discontinuities in the bedrock is defined in the AASHTO Manual on Subsurface Investigations, 1988.

7. Northing and Easting coordinates are shown in Vermont State Plane Grid North American Datum 1983 in meters and survey feet.

HOLE NO.	STATION	OFFSET (ft)	NORTHING	EASTING
GZ-1	420+44.3	6.1 RT	826881.09	1435346.30
GZ-2	420+44.3	12.9 LT	826893.48	1435360.76
GZ-3	419+85.3	7.3 RT	826924.91	1435306.90
GZ-4	419+85.3	13.7 LT	826938.26	1435323.11
GZ-5	418+14.6	7.2 RT	827054.38	1435195.59
GZ-6	418+14.6	13.9 LT	827068.32	1435211.32
GZ-7	417+57.3	6.3 RT	827098.23	1435158.75
GZ-8	417+57.3	12.6 LT	827110.58	1435173.05

PROJECT NAME: NORTH HERO GRAND ISLE BRIDGE

PROJECT NUMBER: BHF 028-1(26)

FILE NAME: z12b142borinfo1.dgn
PROJECT LEADER: T. FRENCH
DESIGNED BY: P LEFEBVRE
BORING INFORMATION SHEET 1

PLOT DATE: 4/25/2016
DRAWN BY: P LEFEBVRE
CHECKED BY: D LAMOTHE
SHEET 12 OF 196

STATE OF VERMONT
AGENCY OF TRANSPORTATION
MATERIALS & RESEARCH SECTION
SUBSURFACE INFORMATION

BORING LOG

North Hero - Grand Isle
BHF 028-1(26)
Bridge No. 8, U.S. Route 2

Boring No.: GZ-1
Page No.: 1 of 2
Pin No.:
Checked By: MA

Boring Crew: M. St. John(NEBC), M. Bergen(GZA)
Date Started: 8/05/15 Date Finished: 8/05/15
VTSPG NAD83: N 826881.09 ft E 1435346.30 ft
Station: 420+44.3 Offset: 6.1 RT
Ground Elevation: 120.5 ft

	Casing	Sampler
Type:	WASH BORE	SS
I.D.:	4 in	1.38 in
Hammer Wt:	300 lb.	140 lb.
Hammer Fall:	24 in.	30 in.
Hammer/Rod Type:	Manual/AWJ	
Rig: MOBILE B53 TRUCK	C_E = 1.0	

Groundwater Observations		
Date	Depth (ft)	Notes
08/05/15	20.7	End of drilling

Depth (ft)	Strata (1)	CLASSIFICATION OF MATERIALS (Description)	Run (Dip deg.)	Core Rec. % (RQD %)	Drill Rate minutes/ft	Blows/6" (N Value)	Moisture Content %	Gravel %	Sand %	Fines %
		0.0 ft - 0.66 ft, ASPHALT								
		Visual Description, (Modified Burmister), S-1 (1-3'): Dense, black, SILT, some fine to coarse Sand, little Gravel (weathered rock fragments). Moist, FILL Rec. = 0.8 ft				24-19-12-11 (31)				
5		Visual Description, (Modified Burmister), S-2 (5-7'): Medium dense, gray, SILT, some fine to coarse Sand, little Gravel (weathered rock fragments). Moist, Rec. = 1.0 ft, FILL				7-15-8-10 (23)				
10		Visual Description, (Modified Burmister), S-3 (10-12'): Very dense, black, fine to coarse SAND and fine Gravel, little Silt (weathered rock fragments). Wet, Rec. = 1.0 ft, FILL				11-23-28-32 (51)				
15		Visual Description, (Modified Burmister), S-4 (15-17'): Medium dense, gray, SILT, some fine to coarse Sand, little Gravel (weathered rock fragments). Wet, Rec. = 0.8 ft, FILL				11-12-10-13 (22)				
20		Visual Description, (Modified Burmister), S-5 (20-22'): Medium dense, gray, fine to coarse SAND and Gravel, little Silt (weathered rock fragments). Wet, Rec. = 0.66 ft, FILL				19-17-11-10 (27)				
25		Visual Description, (Modified Burmister), S-6 (25-27'): Medium dense, gray, SILT, some fine to coarse Sand, little Gravel (weathered rock fragments). Wet, Rec. = 0.66 ft, FILL				9-9-20-11 (29)				
30		Visual Description, (Modified Burmister), S-7 (30-32'): Medium dense, gray, SILT, some fine to coarse Sand, little Gravel (weathered rock fragments). Wet, Rec. = 0.58 ft, FILL				18-12-12-13 (24)				
		Visual Description, (Modified Burmister), S-8 (35-37'): Dense, gray,								

Notes:
1. Stratification lines represent approximate boundary between material types. Transition may be gradual.
2. N Values have not been corrected for hammer energy. C_E is the hammer energy correction factor.
3. Water level readings have been made at times and under conditions stated. Fluctuations may occur due to other factors than those present at the time measurements were made.

BOTTOM OF FOOTING

EST. PILE TIP ELEV.

2010 COPY 04.0190044.01 • HDR NORTH HERO - GRAND ISLE NHF 028-1.GPJ VERMONT AOT.GDT 11/10/15

STATE OF VERMONT
AGENCY OF TRANSPORTATION
MATERIALS & RESEARCH SECTION
SUBSURFACE INFORMATION

BORING LOG

North Hero - Grand Isle
BHF 028-1(26)
Bridge No. 8, U.S. Route 2

Boring No.: GZ-1
Page No.: 2 of 2
Pin No.:
Checked By: MA

Boring Crew: M. St. John(NEBC), M. Bergen(GZA)
Date Started: 8/05/15 Date Finished: 8/05/15
VTSPG NAD83: N 826881.09 ft E 1435346.30 ft
Station: 420+44.3 Offset: 6.1 RT
Ground Elevation: 120.5 ft

	Casing	Sampler
Type:	WASH BORE	SS
I.D.:	4 in	1.38 in
Hammer Wt:	300 lb.	140 lb.
Hammer Fall:	24 in.	30 in.
Hammer/Rod Type:	Manual/AWJ	
Rig: MOBILE B53 TRUCK	C_E = 1.0	

Groundwater Observations		
Date	Depth (ft)	Notes
08/05/15	20.7	End of drilling

Depth (ft)	Strata (1)	CLASSIFICATION OF MATERIALS (Description)	Run (Dip deg.)	Core Rec. % (RQD %)	Drill Rate minutes/ft	Blows/6" (N Value)	Moisture Content %	Gravel %	Sand %	Fines %
		SILT, little Gravel, trace fine Sand, Wet, GLACIAL TILL Rec. = 1.4 ft				9-16-28-40 (44)				
		39.0 ft - 40.0 ft, WEATHERED BEDROCK								
40		40.0 ft - 45.0 ft, C-1: Hard, fresh to slightly weathered, fine-grained, gray, SHALE; moderately fractured, fractures are horizontal, close, smooth, planar.	C-1	93 (63)	8.5 9 4 4.5 5					
45		45.0 ft - 50.0 ft, C-2: Hard, fresh to slightly weathered, fine-grained, gray, SHALE; moderately fractured, fractures are horizontal to slightly dipping, close, rough, planar.	C-2	95 (72)	4 4 4 5 5					
50		50.0 ft - 55.0 ft, C-3: Hard, fresh, fine-grained, gray, SHALE; moderately fractured, fractures are horizontal to slightly dipping, close, rough, undulating.	C-3	98 (87)	7 7.5 8 7 7					
55		55.0 ft - 60.0 ft, C-4: Hard, fresh, fine-grained, gray, SHALE; moderately fractured, fractures are horizontal to slightly dipping, close, rough, undulating.	C-4	96 (58)	8 8 9 7 7					
60		Hole stopped @ 60.0 ft								
65										

Notes:
1. Stratification lines represent approximate boundary between material types. Transition may be gradual.
2. N Values have not been corrected for hammer energy. C_E is the hammer energy correction factor.
3. Water level readings have been made at times and under conditions stated. Fluctuations may occur due to other factors than those present at the time measurements were made.

2010 COPY 04.0190044.01 • HDR NORTH HERO - GRAND ISLE NHF 028-1.GPJ VERMONT AOT.GDT 11/10/15

PROGRESS PLANS

PROJECT NAME: NORTH HERO GRAND ISLE BRIDGE
PROJECT NUMBER: BHF 028-1(26)

FILE NAME: z12b142boringl.dgn
PROJECT LEADER: T. FRENCH
DESIGNED BY: P LEFEBVRE
BORING LOG SHEET 1

PLOT DATE: 4/25/2016
DRAWN BY: P LEFEBVRE
CHECKED BY: J MURPHY
SHEET 13 OF 196

STATE OF VERMONT
AGENCY OF TRANSPORTATION
MATERIALS & RESEARCH SECTION
SUBSURFACE INFORMATION

BORING LOG

North Hero - Grand Isle
BHF 028-1(26)
Bridge No. 8, U.S. Route 2

Boring No.: GZ-2
Page No.: 1 of 2
Pin No.:
Checked By: MA

Boring Crew: M. St. John(NEBC), M. Bergen(GZA)
Date Started: 7/29/15 Date Finished: 7/30/15
VTSPG NAD83: N 826893.48 ft E 1435360.76 ft
Station: 420+44.3 Offset: 12.9 LT
Ground Elevation: 120.5 ft

	Casing	Sampler
Type:	WASH BORE	SS
I.D.:	4 in	1.38 in
Hammer Wt:	300 lb.	140 lb.
Hammer Fall:	24 in.	30 in.
Hammer/Rod Type:	Manual/AWJ	
Rig: MOBILE B53 TRUCK	C_E = 1.0	

Groundwater Observations		
Date	Depth (ft)	Notes
07/30/15	14.5	1st reading
07/30/15	21.0	End of drilling
07/30/15	19.45	After drilling

Depth (ft)	Strata (1)	CLASSIFICATION OF MATERIALS (Description)	Run (Dip deg.)	Core Rec. % (RQD %)	Drill Rate minutes/ft	Blows/6" (N Value)	Moisture Content %	Gravel %	Sand %	Fines %
		0.0 ft - 0.66 ft, ASPHALT								
		Visual Description, (Modified Burmister), S-1 (1-3'): Medium dense, brown, fine to coarse SAND, some Gravel, little Silt (weathered rock fragments). Moist, FILL Rec. = 0.5 ft				16-14-15-12 (29)				
5		Visual Description, (Modified Burmister), S-2 (5-7'): Very dense, black, SILT, some fine to coarse Sand, little Gravel (weathered rock fragments). Moist, Rec. = 1.0 ft, FILL				42-39-14-17 (53)				
10		Visual Description, (Modified Burmister), S-3 (10-12'): Dense, gray/black, SILT, some fine to coarse Sand, little Gravel (weathered rock fragments). Wet, Rec. = 1.17 ft, FILL				7-18-22-24 (40)				
15		Visual Description, (Modified Burmister), S-4 (15-17'): Medium dense, gray, SILT, some fine to coarse Sand, little Gravel (weathered rock fragments). Wet, Rec. = 0.83 ft, FILL				7-12-8-12 (20)				
20		Visual Description, (Modified Burmister), S-5 (20-22'): Very dense, gray, SILT, some fine to coarse Sand, little Gravel (weathered rock fragments). Wet, Rec. = 0.5 ft, FILL				35-33-23-50/2" (56)				
25		Visual Description, (Modified Burmister), S-6 (25-27'): Dense, gray, SILT, some fine to coarse Sand, little Gravel (weathered rock fragments). Wet, Rec. = 0.5 ft, FILL				8-10-28-13 (38)				
30		Visual Description, (Modified Burmister), S-7 (30-32'): Dense, gray, SILT, some fine to coarse Sand, little Gravel (weathered rock fragments). Wet, Rec. = 0.33 ft, FILL				19-24-7-5 (31)				

Notes:
1. Stratification lines represent approximate boundary between material types. Transition may be gradual.
2. N Values have not been corrected for hammer energy. C_E is the hammer energy correction factor.
3. Water level readings have been made at times and under conditions stated. Fluctuations may occur due to other factors than those present at the time measurements were made.

BOTTOM OF FOOTING

EST. PILE TIP ELEV.

STATE OF VERMONT
AGENCY OF TRANSPORTATION
MATERIALS & RESEARCH SECTION
SUBSURFACE INFORMATION

BORING LOG

North Hero - Grand Isle
BHF 028-1(26)
Bridge No. 8, U.S. Route 2

Boring No.: GZ-2
Page No.: 2 of 2
Pin No.:
Checked By: MA

Boring Crew: M. St. John(NEBC), M. Bergen(GZA)
Date Started: 7/29/15 Date Finished: 7/30/15
VTSPG NAD83: N 826893.48 ft E 1435360.76 ft
Station: 420+44.3 Offset: 12.9 LT
Ground Elevation: 120.5 ft

	Casing	Sampler
Type:	WASH BORE	SS
I.D.:	4 in	1.38 in
Hammer Wt:	300 lb.	140 lb.
Hammer Fall:	24 in.	30 in.
Hammer/Rod Type:	Manual/AWJ	
Rig: MOBILE B53 TRUCK	C_E = 1.0	

Groundwater Observations		
Date	Depth (ft)	Notes
07/30/15	14.5	1st reading
07/30/15	21.0	End of drilling
07/30/15	19.45	After drilling

Depth (ft)	Strata (1)	CLASSIFICATION OF MATERIALS (Description)	Run (Dip deg.)	Core Rec. % (RQD %)	Drill Rate minutes/ft	Blows/6" (N Value)	Moisture Content %	Gravel %	Sand %	Fines %
		Visual Description, (Modified Burmister), S-8 (35-37'): Very dense, gray, SILT, little Gravel, trace fine Sand. Wet, Rec. = 1.67 ft, GLACIAL TILL				18-34-31-49 (65)				
		38.0 ft - 40.0 ft, WEATHERED BEDROCK								
40		40.0 ft - 45.0 ft, C-1: Hard, fresh to slightly weathered, fine-grained, gray, SHALE; moderately fractured, fractures are horizontal to slightly dipping, close to moderate, rough to smooth, planar.	C-1	96 (74)	5.5 4.5 7 5.5 5					
45		45.0 ft - 50.0 ft, C-2: Hard, fresh to slightly weathered, fine-grained, gray, SHALE; slightly to moderately fractured, fractures are horizontal to slightly dipping, close to moderate, rough, undulating.	C-2	100 (97)	3 2.5 3 3 3					
50		50.0 ft - 55.0 ft, C-3: Hard, fresh, fine-grained, gray, SHALE; slightly to moderately fractured, fractures are horizontal to slightly dipping, close, rough, undulating.	C-3	100 (87)	4 3 3 3 3.5					
55		55.0 ft - 60.0 ft, C-4: Hard, fresh, fine-grained, gray, SHALE; slightly to moderately fractured, fractures are horizontal to slightly dipping, close to moderate, rough, undulating.	C-4	96 (82)	3 3 3.5 3 4					
60		Hole stopped @ 60.0 ft								
65										

Notes:
1. Stratification lines represent approximate boundary between material types. Transition may be gradual.
2. N Values have not been corrected for hammer energy. C_E is the hammer energy correction factor.
3. Water level readings have been made at times and under conditions stated. Fluctuations may occur due to other factors than those present at the time measurements were made.

2010 COPY 04.0190044.01 • HDR NORTH HERO - GRAND ISLE NHF 028-1.GPJ VERMONT AOT.GDT 11/10/15

PROGRESS PLANS

HDR

PROJECT NAME: NORTH HERO GRAND ISLE BRIDGE
PROJECT NUMBER: BHF 028-1(26)

FILE NAME: z12b142boring2.dgn
PROJECT LEADER: T. FRENCH
DESIGNED BY: P LEFEBVRE
BORING LOG SHEET 2

PLOT DATE: 4/25/2016
DRAWN BY: P LEFEBVRE
CHECKED BY: J MURPHY
SHEET 14 OF 196

STATE OF VERMONT
AGENCY OF TRANSPORTATION
MATERIALS & RESEARCH SECTION
SUBSURFACE INFORMATION

BORING LOG

North Hero - Grand Isle
BHF 028-1(26)
Bridge No. 8, U.S. Route 2

Boring No.: GZ-3
Page No.: 1 of 2
Pin No.:
Checked By: MA

Boring Crew: M. St. John(NEBC), M. Bergen(GZA)
Date Started: 7/30/15 Date Finished: 7/31/15
VTSPG NAD83: N 826924.91 ft E 1435306.90 ft
Station: 419+85.3 Offset: 7.3 RT
Ground Elevation: 120.5 ft

	Casing	Sampler
Type:	WASH BORE	SS
I.D.:	4 in	1.38 in
Hammer Wt:	300 lb.	140 lb.
Hammer Fall:	24 in.	30 in.

Hammer/Rod Type: Manual/AWJ
Rig: MOBILE B53 TRUCK C_E = 1.0

Groundwater Observations

Date	Depth (ft)	Notes

Depth (ft)	Strata (1)	CLASSIFICATION OF MATERIALS (Description)	Run (Dip deg.)	Core Rec. % (RQD %)	Drill Rate minutes/ft	Blows/6" (N Value)	Moisture Content %	Gravel %	Sand %	Fines %
		0.0 ft - 0.75 ft, BRIDGE DECK								
5										
10										
15										
20		19.5 ft - 23.0 ft, WATER								
25		Visual Description, (Modified Burmister), S-1 (23-25'): Dense, black, fine to coarse SAND and Gravel, little Silt (weathered rock fragments). Wet, Rec. = 0.5 ft, FILL				10-17-13-20 (30)				
30		Visual Description, (Modified Burmister), S-2 (28-30'): Loose, gray, SILT, little fine to coarse Sand, little Gravel (weathered rock fragments). Wet, Rec. = 0.5 ft, FILL				4-4-2-5 (6)				
		Visual Description, (Modified Burmister), S-3 (33-35'): Stiff, gray-brown, Clayey SILT, little Sand. Wet, Rec. = 1.67 ft				2-2-2-8 (10)				

Notes:
1. Stratification lines represent approximate boundary between material types. Transition may be gradual.
2. N Values have not been corrected for hammer energy. C_E is the hammer energy correction factor.
3. Water level readings have been made at times and under conditions stated. Fluctuations may occur due to other factors than those present at the time measurements were made.

2010 COPY 04.0190044.01 • HDR NORTH HERO - GRAND ISLE NHF 028-1.GPJ VERMONT AOT.GDT 11/10/15

STATE OF VERMONT
AGENCY OF TRANSPORTATION
MATERIALS & RESEARCH SECTION
SUBSURFACE INFORMATION

BORING LOG

North Hero - Grand Isle
BHF 028-1(26)
Bridge No. 8, U.S. Route 2

Boring No.: GZ-3
Page No.: 2 of 2
Pin No.:
Checked By: MA

Boring Crew: M. St. John(NEBC), M. Bergen(GZA)
Date Started: 7/30/15 Date Finished: 7/31/15
VTSPG NAD83: N 826924.91 ft E 1435306.90 ft
Station: 419+85.3 Offset: 7.3 RT
Ground Elevation: 120.5 ft

	Casing	Sampler
Type:	WASH BORE	SS
I.D.:	4 in	1.38 in
Hammer Wt:	300 lb.	140 lb.
Hammer Fall:	24 in.	30 in.

Hammer/Rod Type: Manual/AWJ
Rig: MOBILE B53 TRUCK C_E = 1.0

Groundwater Observations

Date	Depth (ft)	Notes

Depth (ft)	Strata (1)	CLASSIFICATION OF MATERIALS (Description)	Run (Dip deg.)	Core Rec. % (RQD %)	Drill Rate minutes/ft	Blows/6" (N Value)	Moisture Content %	Gravel %	Sand %	Fines %
		38.0 ft - 40.0 ft, WEATHERED BEDROCK								
40		40.0 ft - 45.0 ft, C-1: Hard, fresh to slightly weathered, fine-grained, gray, SHALE; moderately fractured, fractures are horizontal to slightly dipping, close, rough to smooth, planar.	C-1	90 (67)	11 6 8 6 5					
45		45.0 ft - 50.0 ft, C-2: Hard, fresh, fine-grained, gray, SHALE; slightly to moderately fractured, fractures are horizontal to slightly dipping, close, rough to smooth, planar.	C-2	100 (68)	3.5 3.5 3 2.5 3					
50		50.0 ft - 55.0 ft, C-3: Hard, fresh, fine-grained, gray, SHALE; slightly to moderately fractured, fractures are horizontal to slightly dipping, close, rough to smooth, undulating.	C-3	100 (77)	3 3 3 3 3					
55		55.0 ft - 60.0 ft, C-4: Hard, fresh, fine-grained, gray, SHALE; moderately fractured, fractures are horizontal to slightly dipping, close, rough to smooth, undulating.	C-4	98 (82)	3 3 3 3 2.5					
60		Hole stopped @ 60.0 ft								
65										

Notes:
1. Stratification lines represent approximate boundary between material types. Transition may be gradual.
2. N Values have not been corrected for hammer energy. C_E is the hammer energy correction factor.
3. Water level readings have been made at times and under conditions stated. Fluctuations may occur due to other factors than those present at the time measurements were made.

2010 COPY 04.0190044.01 • HDR NORTH HERO - GRAND ISLE NHF 028-1.GPJ VERMONT AOT.GDT 11/10/15

PROGRESS PLANS

PROJECT NAME: NORTH HERO GRAND ISLE BRIDGE
PROJECT NUMBER: BHF 028-1(26)

FILE NAME: z12b142boring3.dgn
PROJECT LEADER: T. FRENCH
DESIGNED BY: P LEFEBVRE
BORING LOG SHEET 3

PLOT DATE: 4/25/2016
DRAWN BY: P LEFEBVRE
CHECKED BY: J MURPHY
SHEET 15 OF 196

STATE OF VERMONT
AGENCY OF TRANSPORTATION
MATERIALS & RESEARCH SECTION
SUBSURFACE INFORMATION

BORING LOG

North Hero - Grand Isle
BHF 028-1(26)
Bridge No. 8, U.S. Route 2

Boring No.: GZ-4
Page No.: 1 of 2
Pin No.:
Checked By: MA

Boring Crew: M. St. John(NEBC), M. Bergen(GZA)
Date Started: 7/27/15 Date Finished: 7/27/15
VTSPG NAD83: N 826938.26 ft E 1435323.11 ft
Station: 419+85.3 Offset: 13.7 LT
Ground Elevation: 120.5 ft

	Casing	Sampler
Type:	WASH BORE	SS
I.D.:	4 in	1.38 in
Hammer Wt:	300 lb.	140 lb.
Hammer Fall:	24 in.	30 in.

Hammer/Rod Type: Manual/AWJ
Rig: MOBILE B53 TRUCK C_E = 1.0

Groundwater Observations

Date	Depth (ft)	Notes

Depth (ft)	Strata (1)	CLASSIFICATION OF MATERIALS (Description)	Run (Dip deg.)	Core Rec. % (RQD %)	Drill Rate minutes/ft	Blows/6" (N Value)	Moisture Content %	Gravel %	Sand %	Fines %
		0.0 ft - 0.75 ft, BRIDGE DECK								
5										
10										
15										
20		19.6 ft - 23.0 ft, WATER								
25		Visual Description, (Modified Burmister), S-1 (23-25'): Medium dense, black, fine to coarse SAND and Gravel, little Silt (weathered rock fragments), trace Organics. Wet, Rec. = 0.33 ft, FILL				6-7-6-5 (13)				
30		Visual Description, (Modified Burmister), S-2 (28-30'): Medium dense, black, fine to coarse SAND and Gravel, little Silt (weathered rock fragments). Wet, Rec. = 0.25 ft, FILL				12-9-9-21 (18)				
		Visual Description, (Modified Burmister), S-3A (33-34.3'): Very soft, gray, Clayey SILT, little fine Sand, trace Organics. Wet, Rec. = 2.0 ft				1-1-1-1 (2)				
		Visual Description, (Modified Burmister), S-3B (34.3-35'): Very soft,								

Notes:
1. Stratification lines represent approximate boundary between material types. Transition may be gradual.
2. N Values have not been corrected for hammer energy. C_E is the hammer energy correction factor.
3. Water level readings have been made at times and under conditions stated. Fluctuations may occur due to other factors than those present at the time measurements were made.

2010 COPY 04J190044J01 • HDR NORTH HERO - GRAND ISLE NHF 028-1.GPJ VERMONT AOT.GDT 11/10/15

STATE OF VERMONT
AGENCY OF TRANSPORTATION
MATERIALS & RESEARCH SECTION
SUBSURFACE INFORMATION

BORING LOG

North Hero - Grand Isle
BHF 028-1(26)
Bridge No. 8, U.S. Route 2

Boring No.: GZ-4
Page No.: 2 of 2
Pin No.:
Checked By: MA

Boring Crew: M. St. John(NEBC), M. Bergen(GZA)
Date Started: 7/27/15 Date Finished: 7/27/15
VTSPG NAD83: N 826938.26 ft E 1435323.11 ft
Station: 419+85.3 Offset: 13.7 LT
Ground Elevation: 120.5 ft

	Casing	Sampler
Type:	WASH BORE	SS
I.D.:	4 in	1.38 in
Hammer Wt:	300 lb.	140 lb.
Hammer Fall:	24 in.	30 in.

Hammer/Rod Type: Manual/AWJ
Rig: MOBILE B53 TRUCK C_E = 1.0

Groundwater Observations

Date	Depth (ft)	Notes

Depth (ft)	Strata (1)	CLASSIFICATION OF MATERIALS (Description)	Run (Dip deg.)	Core Rec. % (RQD %)	Drill Rate minutes/ft	Blows/6" (N Value)	Moisture Content %	Gravel %	Sand %	Fines %
		gray, CLAY & SILT, trace Sand. Wet								
		(Modified Burmister), S-4: (38) No recovery. Split Spoon Refusal. Rec. = 0.0 ft. 38.0 ft - 38.0 ft				50/0" (50)				
		39.0 ft - 40.0 ft, WEATHERED BEDROCK								
40		40.0 ft - 45.0 ft, C-1: Hard, fresh to slightly weathered, fine-grained, gray, SHALE; moderately fractured, fractures are moderately dipping, close, rough, planar.	C-1	88 (42)	7 6.5 5 2.5 4					
45		45.0 ft - 50.0 ft, C-2: Hard, fresh, fine-grained, gray, SHALE; moderately fractured, fractures are horizontal to slightly dipping, close to moderate, rough, planar.	C-2	100 (87)	3.5 4 3.5 3 3.5					
50		50.0 ft - 55.0 ft, C-3: Hard, fresh, fine-grained, gray, SHALE; moderately fractured, fractures are horizontal to slightly dipping, close to moderate, rough, undulating.	C-3	95 (82)	2 2 2.5 2.5 3					
55		55.0 ft - 60.0 ft, C-4: Hard, fresh, fine-grained, gray, SHALE; moderately to severely fractured, fractures are moderately dipping to vertical, moderate to close, rough to smooth, undulating.	C-4	100 (43)	3 3 3 3 3					
60		Hole stopped @ 60.0 ft								
65										

Notes:
1. Stratification lines represent approximate boundary between material types. Transition may be gradual.
2. N Values have not been corrected for hammer energy. C_E is the hammer energy correction factor.
3. Water level readings have been made at times and under conditions stated. Fluctuations may occur due to other factors than those present at the time measurements were made.

2010 COPY 04J190044J01 • HDR NORTH HERO - GRAND ISLE NHF 028-1.GPJ VERMONT AOT.GDT 11/10/15

PROGRESS PLANS

HDR

PROJECT NAME: NORTH HERO GRAND ISLE BRIDGE
PROJECT NUMBER: BHF 028-1(26)

FILE NAME: z12bl42boring4.dgn
PROJECT LEADER: T. FRENCH
DESIGNED BY: P LEFEBVRE
BORING LOG SHEET 4

PLOT DATE: 4/25/2016
DRAWN BY: P LEFEBVRE
CHECKED BY: J MURPHY
SHEET 16 OF 196

STATE OF VERMONT
AGENCY OF TRANSPORTATION
MATERIALS & RESEARCH SECTION
SUBSURFACE INFORMATION

BORING LOG

North Hero - Grand Isle
BHF 028-1(26)
Bridge No. 8, U.S. Route 2

Boring No.: GZ-5
Page No.: 2 of 2
Pin No.:
Checked By: MA

Boring Crew: M. St. John(NEBC), M. Bergen(GZA)
Date Started: 8/03/15 Date Finished: 8/03/15
VTSPG NAD83: N 827054.38 ft E 1435195.59 ft
Station: 418+14.6 Offset: 7.2 RT
Ground Elevation: 120.0 ft

	Casing	Sampler
Type:	WASH BORE	SS
I.D.:	4 in	1.38 in
Hammer Wt:	300 lb.	140 lb.
Hammer Fall:	24 in.	30 in.
Hammer/Rod Type:	Manual/AWJ	
Rig: MOBILE B53 TRUCK	C_E = 1.0	

Groundwater Observations		
Date	Depth (ft)	Notes

Depth (ft)	Strata (1)	CLASSIFICATION OF MATERIALS (Description)	Run (Dip deg.)	Core Rec. % (RQD %)	Drill Rate minutes/ft	Blows/6" (N Value)	Moisture Content %	Gravel %	Sand %	Fines %
		Visual Description, (Modified Burmister), S-4 (38-39.25'): Very dense, gray, SILT, trace Gravel, trace fine Sand. Wet, GLACIAL TILL Rec. = 1.25 ft				18-18-100/3" (100)				
		39.25 ft - 40.0 ft, WEATHERED BEDROCK								
40		40.0 ft - 45.0 ft, C-1: Hard, fresh to slightly weathered, fine-grained, gray, SHALE; moderately fractured, fractures are horizontal, close, smooth, planar.	C-1	88 (42)	6.5 6.5 9 3.5 4					
45		45.0 ft - 50.0 ft, C-2: Hard, fresh, fine-grained, gray, SHALE; slightly to moderately fractured, fractures are horizontal, close, smooth, undulating.	C-2	100 (73)	4 3.5 5 4.5 5					
50		50.0 ft - 55.0 ft, C-3: Hard, fresh, fine-grained, gray, SHALE; moderately fractured, fractures are horizontal to vertical, close, smooth, undulating.	C-3	100 (47)	3 3 4.5 5 5					
55		55.0 ft - 60.0 ft, C-4: Hard, fresh to slightly weathered, fine-grained, gray, SHALE; moderately fractured, fractures are horizontal, close to moderate, smooth, undulating.	C-4	96 (65)	6 3 3.5 3.5 3.5					
60		Hole stopped @ 60.0 ft								
65										

Notes:
1. Stratification lines represent approximate boundary between material types. Transition may be gradual.
2. N Values have not been corrected for hammer energy. C_E is the hammer energy correction factor.
3. Water level readings have been made at times and under conditions stated. Fluctuations may occur due to other factors than those present at the time measurements were made.

2010 COPY 04J190044J1 • HDR NORTH HERO - GRAND ISLE NHF 028-1.GPJ VERMONT AOT.GDT 11/10/15

STATE OF VERMONT
AGENCY OF TRANSPORTATION
MATERIALS & RESEARCH SECTION
SUBSURFACE INFORMATION

BORING LOG

North Hero - Grand Isle
BHF 028-1(26)
Bridge No. 8, U.S. Route 2

Boring No.: GZ-5
Page No.: 1 of 2
Pin No.:
Checked By: MA

Boring Crew: M. St. John(NEBC), M. Bergen(GZA)
Date Started: 8/03/15 Date Finished: 8/03/15
VTSPG NAD83: N 827054.38 ft E 1435195.59 ft
Station: 418+14.6 Offset: 7.2 RT
Ground Elevation: 120.0 ft

	Casing	Sampler
Type:	WASH BORE	SS
I.D.:	4 in	1.38 in
Hammer Wt:	300 lb.	140 lb.
Hammer Fall:	24 in.	30 in.
Hammer/Rod Type:	Manual/AWJ	
Rig: MOBILE B53 TRUCK	C_E = 1.0	

Groundwater Observations		
Date	Depth (ft)	Notes

Depth (ft)	Strata (1)	CLASSIFICATION OF MATERIALS (Description)	Run (Dip deg.)	Core Rec. % (RQD %)	Drill Rate minutes/ft	Blows/6" (N Value)	Moisture Content %	Gravel %	Sand %	Fines %
		0.0 ft - 0.75 ft, BRIDGE DECK								
5										
10										
15										
20		19.6 ft - 22.5 ft, WATER								
25		Visual Description, (Modified Burmister), S-1 (23-25'): Medium dense, black, SILT, some fine to coarse Sand, little Gravel (weathered rock fragments). Wet, FILL Rec. = 0.5 ft				8-7-6-7 (13)				
30		Visual Description, (Modified Burmister), S-2 (28-30'): Loose, gray, SILT, some fine to coarse Sand, little Gravel (weathered rock fragments). Wet, Rec. = 0.33 ft, FILL				4-2-2-4 (4)				
		Visual Description, (Modified Burmister), S-3 (33-35'): Soft, gray-brown, SILT & CLAY, little Sand. Wet Rec. = 1.0 ft				4-1-1-2 (2)				

Notes:
1. Stratification lines represent approximate boundary between material types. Transition may be gradual.
2. N Values have not been corrected for hammer energy. C_E is the hammer energy correction factor.
3. Water level readings have been made at times and under conditions stated. Fluctuations may occur due to other factors than those present at the time measurements were made.

2010 COPY 04J190044J1 • HDR NORTH HERO - GRAND ISLE NHF 028-1.GPJ VERMONT AOT.GDT 11/10/15

PROGRESS PLANS

HDR

PROJECT NAME: NORTH HERO GRAND ISLE BRIDGE
PROJECT NUMBER: BHF 028-1(26)

FILE NAME: z12bl42boring5.dgn
PROJECT LEADER: T. FRENCH
DESIGNED BY: P LEFEBVRE
BORING LOG SHEET 5

PLOT DATE: 4/25/2016
DRAWN BY: P LEFEBVRE
CHECKED BY: J MURPHY
SHEET 17 OF 196

STATE OF VERMONT
AGENCY OF TRANSPORTATION
MATERIALS & RESEARCH SECTION
SUBSURFACE INFORMATION

BORING LOG

North Hero - Grand Isle
BHF 028-1(26)
Bridge No. 8, U.S. Route 2

Boring No.: GZ-6
Page No.: 1 of 2
Pin No.:
Checked By: MA

Boring Crew: M. St. John(NEBC), M. Bergen(GZA)
Date Started: 7/28/15 Date Finished: 7/28/15
VTSPG NAD83: N 827068.32 ft E 1435211.32 ft
Station: 418+14.6 Offset: 13.9 LT
Ground Elevation: 120.0 ft

	Casing	Sampler
Type:	WASH BORE	SS
I.D.:	4 in	1.38 in
Hammer Wt:	300 lb.	140 lb.
Hammer Fall:	24 in.	30 in.

Hammer/Rod Type: Manual/AWJ
Rig: MOBILE B53 TRUCK C_E = 1.0

Groundwater Observations		
Date	Depth (ft)	Notes

Depth (ft)	Strata (1)	CLASSIFICATION OF MATERIALS (Description)	Run (Dip deg.)	Core Rec. % (RQD %)	Drill Rate minutes/ft	Blows/6" (N Value)	Moisture Content %	Gravel %	Sand %	Fines %
		0.0 ft - 0.75 ft, BRIDGE DECK								
5										
10										
15										
20		19.6 ft - 23.0 ft, WATER								
25		Visual Description, (Modified Burmister), S-1 (23-25'): Dense, black, fine to coarse SAND and Gravel, little Silt (weathered rock fragments). Wet, Rec. = 1.0 ft, FILL				9-13-30-19 (43)				
30		Visual Description, (Modified Burmister), S-2 (28-30'): Medium dense, black, fine to coarse SAND and Gravel, little Silt (weathered rock fragments). Wet, Rec. = 0.33 ft, FILL				3-5-7-6 (12)				
		Visual Description, (Modified Burmister), S-3 (33-35'): Medium stiff, gray, SILT & CLAY, little Sand. Wet, Rec. = 0.33 ft				6-5-3-3 (8)				

Notes:
1. Stratification lines represent approximate boundary between material types. Transition may be gradual.
2. N Values have not been corrected for hammer energy. C_E is the hammer energy correction factor.
3. Water level readings have been made at times and under conditions stated. Fluctuations may occur due to other factors than those present at the time measurements were made.

2010 COPY 04J190044J1 • HDR NORTH HERO - GRAND ISLE NHF 028-1.GPJ VERMONT AOT.GDT 11/10/15

STATE OF VERMONT
AGENCY OF TRANSPORTATION
MATERIALS & RESEARCH SECTION
SUBSURFACE INFORMATION

BORING LOG

North Hero - Grand Isle
BHF 028-1(26)
Bridge No. 8, U.S. Route 2

Boring No.: GZ-6
Page No.: 2 of 2
Pin No.:
Checked By: MA

Boring Crew: M. St. John(NEBC), M. Bergen(GZA)
Date Started: 7/28/15 Date Finished: 7/28/15
VTSPG NAD83: N 827068.32 ft E 1435211.32 ft
Station: 418+14.6 Offset: 13.9 LT
Ground Elevation: 120.0 ft

	Casing	Sampler
Type:	WASH BORE	SS
I.D.:	4 in	1.38 in
Hammer Wt:	300 lb.	140 lb.
Hammer Fall:	24 in.	30 in.

Hammer/Rod Type: Manual/AWJ
Rig: MOBILE B53 TRUCK C_E = 1.0

Groundwater Observations		
Date	Depth (ft)	Notes

Depth (ft)	Strata (1)	CLASSIFICATION OF MATERIALS (Description)	Run (Dip deg.)	Core Rec. % (RQD %)	Drill Rate minutes/ft	Blows/6" (N Value)	Moisture Content %	Gravel %	Sand %	Fines %
40		Visual Description, (Modified Burmister), S-4 (38-40'): Medium dense, gray, SILT, some fine Sand, little Gravel. Wet, Rec. = 0.75 ft, GLACIAL TILL				10-7-13-8 (20)				
		42.5 ft - 45.0 ft, WEATHERED BEDROCK								
45		45.0 ft - 50.0 ft, C-1: Hard, fresh to slightly weathered, fine-grained, gray, SHALE; moderately fractured, fractures are horizontal to moderately dipping, close to moderate, rough to smooth, undulating.	C-1	95 (63)	4.5 5.5 6 4 3.5					
50		50.0 ft - 55.0 ft, C-2: Hard, fresh, fine-grained, gray, SHALE; moderately to severely fractured, fractures are moderately dipping to vertical, close to moderate, rough to smooth, undulating.	C-2	100 (40)	4 3 2 2 3					
55		55.0 ft - 60.0 ft, C-3: Hard, fresh, fine-grained, gray, SHALE; moderately to severely fractured, fractures are horizontal to moderately dipping, close, rough to smooth, undulating.	C-3	100 (55)	3 3 2 3 3					
60		60.0 ft - 65.0 ft, C-4: Hard, fresh, fine-grained, gray, SHALE; moderately fractured, fractures are horizontal to moderately dipping, close, smooth, undulating.	C-4	100 (80)	3 2 2 2.5 2.5					
65		Hole stopped @ 65.0 ft								

Notes:
1. Stratification lines represent approximate boundary between material types. Transition may be gradual.
2. N Values have not been corrected for hammer energy. C_E is the hammer energy correction factor.
3. Water level readings have been made at times and under conditions stated. Fluctuations may occur due to other factors than those present at the time measurements were made.

2010 COPY 04J190044J1 • HDR NORTH HERO - GRAND ISLE NHF 028-1.GPJ VERMONT AOT.GDT 11/10/15

PROGRESS PLANS

HDR

PROJECT NAME: NORTH HERO GRAND ISLE BRIDGE
PROJECT NUMBER: BHF 028-1(26)

FILE NAME: z12b142boring6.dgn
PROJECT LEADER: T. FRENCH
DESIGNED BY: P LEFEBVRE
BORING LOG SHEET 6

PLOT DATE: 4/25/2016
DRAWN BY: P LEFEBVRE
CHECKED BY: J MURPHY
SHEET 18 OF 196

STATE OF VERMONT
AGENCY OF TRANSPORTATION
MATERIALS & RESEARCH SECTION
SUBSURFACE INFORMATION

BORING LOG

North Hero - Grand Isle
BHF 028-1(26)
Bridge No. 8, U.S. Route 2

Boring No.: GZ-7
Page No.: 1 of 2
Pin No.:
Checked By: MA

Boring Crew: M. St. John(NEBC), M. Bergen(GZA)
Date Started: 8/04/15 Date Finished: 8/04/15
VTSPG NAD83: N 827098.23 ft E 1435158.75 ft
Station: 417+57.3 Offset: 6.3 RT
Ground Elevation: 120.0 ft

	Casing	Sampler
Type:	WASH BORE	SS
I.D.:	4 in	1.38 in
Hammer Wt:	300 lb.	140 lb.
Hammer Fall:	24 in.	30 in.
Hammer/Rod Type:	Manual/AWJ	
Rig: MOBILE B53 TRUCK	C_E = 1.0	

Groundwater Observations

Date	Depth (ft)	Notes

Depth (ft)	Strata (1)	CLASSIFICATION OF MATERIALS (Description)	Run (Dip deg.)	Core Rec. % (RQD %)	Drill Rate minutes/ft	Blows/6" (N Value)	Moisture Content %	Gravel %	Sand %	Fines %
		0.0 ft - 0.66 ft, ASPHALT								
		Visual Description, (Modified Burmister), S-1 (1-3'): Medium dense, black, fine to coarse SAND, some Silt, some Gravel. Moist, FILL Rec. = 1.0 ft				9-12-12-11 (24)				
5		Visual Description, (Modified Burmister), S-2 (5-7'): Medium dense, black, fine to coarse SAND, some Silt, trace Gravel. Moist, Rec. = 1.0 ft, FILL				8-11-8-3 (19)				
10		Visual Description, (Modified Burmister), S-3 (10-12'): Medium dense, dark gray, SILT, some fine to coarse Sand, little Gravel (weathered rock fragments), with wood fragments. Wet, Rec. = 0.5 ft, FILL				12-6-5-7 (11)				
15		Visual Description, (Modified Burmister), S-4 (15-16.25'): Very dense, gray, fine to coarse SAND and Gravel, little Silt (weathered rock fragments). Wet, Rec. = 0.42 ft, FILL				5-12-50/3" (50)				
20		Visual Description, (Modified Burmister), S-5 (20-22'): Medium dense, gray, SILT, some fine to coarse Sand, little Gravel (weathered rock fragments). Wet, Rec. = 0.58 ft, FILL				7-8-18-11 (26)				
25		Visual Description, (Modified Burmister), S-6 (25-27'): Medium dense, gray, fine to coarse SAND and Gravel, little Silt (weathered rock fragments). Wet, Rec. = 0.42 ft, FILL				9-7-7-7 (14)				
30		Visual Description, (Modified Burmister), S-7 (30-32'): Medium dense, gray, fine to coarse SAND and Gravel, little Silt (weathered rock fragments). Wet, Rec. = 0.42 ft, FILL				6-5-7-8 (12)				
		Visual Description, (Modified Burmister), S-8 (35-37'): Soft, gray, Silty CLAY. Wet								

Notes:
1. Stratification lines represent approximate boundary between material types. Transition may be gradual.
2. N Values have not been corrected for hammer energy. C_E is the hammer energy correction factor.
3. Water level readings have been made at times and under conditions stated. Fluctuations may occur due to other factors than those present at the time measurements were made.

BOTTOM OF FOOTING

EST. PILE TIP ELEV.

STATE OF VERMONT
AGENCY OF TRANSPORTATION
MATERIALS & RESEARCH SECTION
SUBSURFACE INFORMATION

BORING LOG

North Hero - Grand Isle
BHF 028-1(26)
Bridge No. 8, U.S. Route 2

Boring No.: GZ-7
Page No.: 2 of 2
Pin No.:
Checked By: MA

Boring Crew: M. St. John(NEBC), M. Bergen(GZA)
Date Started: 8/04/15 Date Finished: 8/04/15
VTSPG NAD83: N 827098.23 ft E 1435158.75 ft
Station: 417+57.3 Offset: 6.3 RT
Ground Elevation: 120.0 ft

	Casing	Sampler
Type:	WASH BORE	SS
I.D.:	4 in	1.38 in
Hammer Wt:	300 lb.	140 lb.
Hammer Fall:	24 in.	30 in.
Hammer/Rod Type:	Manual/AWJ	
Rig: MOBILE B53 TRUCK	C_E = 1.0	

Groundwater Observations

Date	Depth (ft)	Notes

Depth (ft)	Strata (1)	CLASSIFICATION OF MATERIALS (Description)	Run (Dip deg.)	Core Rec. % (RQD %)	Drill Rate minutes/ft	Blows/6" (N Value)	Moisture Content %	Gravel %	Sand %	Fines %
		Rec. = 1.0 ft				2-1-2-2 (3)				
		39.0 ft - 40.0 ft, WEATHERED BEDROCK								
40		40.0 ft - 45.0 ft, C-1: Hard, fresh, fine-grained, gray, SHALE; moderately fractured, fractures are horizontal, close, smooth, planar.	C-1	100 (68)	5 6.5 4.5 6 6					
45		45.0 ft - 50.0 ft, C-2: Hard, fresh, fine-grained, gray, SHALE; moderately fractured, fractures are horizontal, close, smooth, planar.	C-2	96 (72)	6.5 6 6 7 6					
50		50.0 ft - 55.0 ft, C-3: Hard, fresh to slightly weathered, fine-grained, gray, SHALE; moderately to severely fractured, fractures are horizontal, close, smooth, planar.	C-3	96 (48)	13 9.5 11.5 17 12.5					
55		55.0 ft - 60.0 ft, C-4: Hard, fresh to slightly weathered, fine-grained, gray, SHALE; moderately to severely fractured, fractures are horizontal, close, smooth, planar.	C-4	95 (43)	6 7.5 7 9 7					
60		Hole stopped @ 60.0 ft								
65										

Notes:
1. Stratification lines represent approximate boundary between material types. Transition may be gradual.
2. N Values have not been corrected for hammer energy. C_E is the hammer energy correction factor.
3. Water level readings have been made at times and under conditions stated. Fluctuations may occur due to other factors than those present at the time measurements were made.

2010 COPY 04.0190044.01 • HDR NORTH HERO - GRAND ISLE NHF 028-1.GPJ VERMONT AOT.GDT 11/10/15

PROGRESS PLANS

HDR

PROJECT NAME: NORTH HERO GRAND ISLE BRIDGE
PROJECT NUMBER: BHF 028-1(26)

FILE NAME: zl2bl42boring7.dgn
PROJECT LEADER: T. FRENCH
DESIGNED BY: P LEFEBVRE
BORING LOG SHEET 7

PLOT DATE: 4/25/2016
DRAWN BY: P LEFEBVRE
CHECKED BY: J MURPHY
SHEET 19 OF 196

STATE OF VERMONT
AGENCY OF TRANSPORTATION
MATERIALS & RESEARCH SECTION
SUBSURFACE INFORMATION

BORING LOG

North Hero - Grand Isle
BHF 028-1(26)
Bridge No. 8, U.S. Route 2

Boring No.: GZ-8
Page No.: 1 of 2
Pin No.:
Checked By: MA

Boring Crew: M. St. John(NEBC), M. Bergen(GZA)
Date Started: 7/28/15 Date Finished: 7/29/15
VTSPG NAD83: N 827110.58 ft E 1435173.05 ft
Station: 417+57.3 Offset: 12.6 LT
Ground Elevation: 120.0 ft

	Casing	Sampler
Type:	WASH BORE	SS
I.D.:	4 in	1.38 in
Hammer Wt:	300 lb.	140 lb.
Hammer Fall:	24 in.	30 in.
Hammer/Rod Type:	Manual/AWJ	
Rig: MOBILE B53 TRUCK	C_E = 1.0	

Groundwater Observations		
Date	Depth (ft)	Notes

Depth (ft)	Strata (1)	CLASSIFICATION OF MATERIALS (Description)	Run (Dip deg.)	Core Rec. % (RQD %)	Drill Rate minutes/ft	Blows/6" (N Value)	Moisture Content %	Gravel %	Sand %	Fines %
		0.0 ft - 0.75 ft, ASPHALT								
		Visual Description, (Modified Burmister), S-1 (1-3'): Medium dense, brown, fine to coarse SAND, little Gravel, trace Silt. Moist, FILL Rec. = 0.25 ft				17-12-13-21 (25)				
5		Visual Description, (Modified Burmister), S-2 (5-7'): Medium dense, black, fine to medium SAND, little Gravel, trace Silt (weathered rock fragments). Moist, Rec. = 1.0 ft, FILL				5-7-9-8 (16)				
10		Visual Description, (Modified Burmister), S-3 (10-12'): Medium dense, gray, SILT, some fine to coarse Sand, little Gravel (weathered rock fragments). Wet, Rec. = 0.58 ft, FILL				3-6-11-13 (17)				
15		Visual Description, (Modified Burmister), S-4 (15-17'): Very loose, brown, fine to coarse GRAVEL, some Silt, some fine to coarse Sand (weathered rock fragments). Wet, Rec. = 0.42 ft, FILL				2-1-1-2 (2)				
20		Visual Description, (Modified Burmister), S-5 (20-21.3'): Very dense, black, fine to coarse SAND and Gravel, little Silt (weathered rock fragments). Wet, Rec. = 0.67 ft, FILL				4-12-100/4" (100)				
25		Visual Description, (Modified Burmister), S-6 (25-27'): No recovery., Rec. = 0.0 ft, FILL				7-7-4-8 (11)				
30		Visual Description, (Modified Burmister), S-7 (30-32'): Loose, gray, SILT, some fine to coarse Sand, little Gravel (weathered rock fragments). Wet, Rec. = 0.58 ft, FILL				5-3-5-8 (8)				

Notes:
1. Stratification lines represent approximate boundary between material types. Transition may be gradual.
2. N Values have not been corrected for hammer energy. C_E is the hammer energy correction factor.
3. Water level readings have been made at times and under conditions stated. Fluctuations may occur due to other factors than those present at the time measurements were made.

BOTTOM OF FOOTING

EST. PILE TIP ELEV.

STATE OF VERMONT
AGENCY OF TRANSPORTATION
MATERIALS & RESEARCH SECTION
SUBSURFACE INFORMATION

BORING LOG

North Hero - Grand Isle
BHF 028-1(26)
Bridge No. 8, U.S. Route 2

Boring No.: GZ-8
Page No.: 2 of 2
Pin No.:
Checked By: MA

Boring Crew: M. St. John(NEBC), M. Bergen(GZA)
Date Started: 7/28/15 Date Finished: 7/29/15
VTSPG NAD83: N 827110.58 ft E 1435173.05 ft
Station: 417+57.3 Offset: 12.6 LT
Ground Elevation: 120.0 ft

	Casing	Sampler
Type:	WASH BORE	SS
I.D.:	4 in	1.38 in
Hammer Wt:	300 lb.	140 lb.
Hammer Fall:	24 in.	30 in.
Hammer/Rod Type:	Manual/AWJ	
Rig: MOBILE B53 TRUCK	C_E = 1.0	

Groundwater Observations		
Date	Depth (ft)	Notes

Depth (ft)	Strata (1)	CLASSIFICATION OF MATERIALS (Description)	Run (Dip deg.)	Core Rec. % (RQD %)	Drill Rate minutes/ft	Blows/6" (N Value)	Moisture Content %	Gravel %	Sand %	Fines %
		Visual Description, (Modified Burmister), S-8A (35-35.2'): Loose, gray, SILT, some fine to coarse Sand, little Gravel (weathered rock fragments). Wet, Rec. = 1.66 ft, FILL				6-2-3-7 (5)				
		Visual Description, (Modified Burmister), S-8B (35.2-37'): Medium stiff, gray, SILT & CLAY, trace Sand. Wet								
40		40.0 ft - 45.0 ft, C-1: Moderately hard, fresh, fine-grained, gray, SHALE; moderately to severely fractured, fractures are horizontal to slightly dipping, close, rough to smooth, planar.	C-1	88 (30)	8 7 7 9.5 12.5					
45		45.0 ft - 50.0 ft, C-2: Moderately hard, fresh, fine-grained, gray, SHALE; moderately fractured, fractures are horizontal to slightly dipping, close to wide, rough to smooth, planar.	C-2	100 (78)	5.5 7 6.5 5.5 9					
50		50.0 ft - 55.0 ft, C-3: Moderately hard, fresh, fine-grained, gray, SHALE; moderately fractured, fractures are horizontal to slightly dipping, close to wide, rough to smooth, planar.	C-3	100 (57)	4 6 4 5 7					
55		55.0 ft - 59.0 ft, C-4: Moderately hard, slightly weathered, fine-grained, gray, SHALE; moderately fractured, fractures are horizontal to vertical, close, smooth to rough, planar.	C-4	100 (42)	5 4 4 6					
60		Hole stopped @ 59.0 ft								
65										

Notes:
1. Stratification lines represent approximate boundary between material types. Transition may be gradual.
2. N Values have not been corrected for hammer energy. C_E is the hammer energy correction factor.
3. Water level readings have been made at times and under conditions stated. Fluctuations may occur due to other factors than those present at the time measurements were made.

2010 COPY 04J019044J01 • HDR NORTH HERO • GRAND ISLE NHF 028-1.GPJ VERMONT AOT.GDT 11/10/15

PROGRESS PLANS

PROJECT NAME: NORTH HERO GRAND ISLE BRIDGE
PROJECT NUMBER: BHF 028-1(26)

FILE NAME: z12b142boring8.dgn
PROJECT LEADER: T. FRENCH
DESIGNED BY: P LEFEBVRE
BORING LOG SHEET 8

PLOT DATE: 4/25/2016
DRAWN BY: P LEFEBVRE
CHECKED BY: J MURPHY
SHEET 20 OF 196

STEEL BEAM GUARDRAIL, GALVANIZED
STA 406+00.00 - STA 408+00.0 RT
STA 407+08.5 - STA 408+00.0 LT

REMOVAL AND DISPOSAL OF GUARDRAIL
STA 406+00.00 - STA 408+00.0 RT
STA 407+16.8 - STA 408+00.0 LT

ANCHOR FOR STEEL BEAM RAIL
STA 407+15.0 LT

DELINEATOR WITH STEEL POST
STA 407+08.5 LT

DURABLE 4 INCH WHITE LINE, TYPE A TAPE AND TEMPORARY 4 INCH WHITE LINE, PAINT
(ALL LINES WILL INCLUDE EDGE LINE BREAKS AND RADIUS FOR TOWN HIGHWAYS)
STA 406+00.00 - STA 408+00.0 EDGE LINE LT & RT

DURABLE 4 INCH YELLOW LINE, TYPE A TAPE AND TEMPORARY 4 INCH YELLOW LINE, PAINT
(ALL LINES WILL INCLUDE C/L BREAKS FOR TOWN HIGHWAYS)
S = SOLID, D = DASHED LT ℄ RT
STA 406+00.00 - STA 408+00.0 S - S

6 INCH UNDERDRAIN PIPE
STA 406+50.0 - STA 407+55.0 LT

UNDERDRAIN FLUSHING BASIN
STA 406+50.0 LT

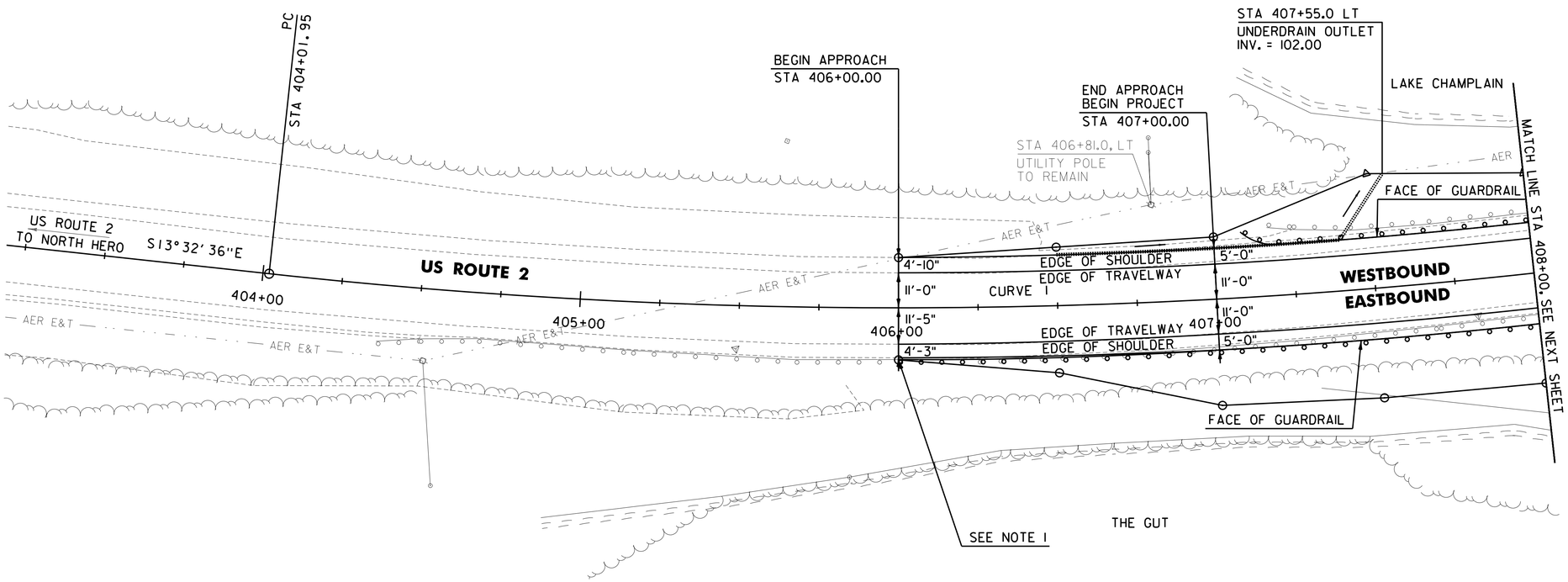

NOTE:

1. THE CONTRACTOR SHALL SPLICE THE EXISTING GUARDRAIL AND CONNECT PROPOSED GUARDRAIL TO REMAINING EXISTING GUARDRAIL.

CURVE 1
△ = 27°14'03" LT
D = 3°07'51"
R = 1830.00'
T = 443.30'
L = 869.84'
E = 52.93'
e = 0.054 FT/FT

SIGN LEGEND
R = REMOVE
S = SALVAGE
N = NEW
RET = RETAIN
B-B = BACK TO BACK
EXISTING = — — — — —
NEW = ————

SCALE 1" = 20'-0"
20 0 20

CHA

PROGRESS PLANS

PROJECT NAME: NORTH HERO GRAND ISLE BRIDGE
PROJECT NUMBER: BHF 028-1(26)

FILE NAME: z12b142bdr.dgn
PROJECT LEADER: D. GOZALKOWSKI
DESIGNED BY: J. PARRELLI
ROADWAY LAYOUT SHEET 1
PLOT DATE: 4/29/2016
DRAWN BY: A. KIRBY
CHECKED BY: J. SHIELDS
SHEET 21 OF 196

FILE NAME = V:\Projects\ANY\K3\28173\CADD_MSTN\12b142\Consultants\z12b142bdr.dgn
DATE/TIME = 4/29/2016
USER = 5237

STEEL BEAM GUARDRAIL, GALVANIZED
STA 408+00.0 - STA 412+25.0 LT
STA 408+00.0 - STA 412+25.0 RT

REMOVAL AND DISPOSAL OF GUARDRAIL
STA 408+00.0 - STA 412+25.0 LT
STA 408+00.0 - STA 412+25.0 RT

DURABLE 4 INCH WHITE LINE, TYPE A TAPE
AND TEMPORARY 4 INCH WHITE LINE, PAINT
(ALL LINES WILL INCLUDE EDGE LINE BREAKS AND RADIUS FOR TOWN HIGHWAYS)
STA 408+00.0 - STA 412+25.0 EDGE LINE LT & RT

DURABLE 4 INCH YELLOW LINE, TYPE A TAPE
AND TEMPORARY 4 INCH YELLOW LINE, PAINT
(ALL LINES WILL INCLUDE C/L BREAKS FOR TOWN HIGHWAYS)
S = SOLID, D = DASHED

	LT	℄	RT
STA 408+00.0 - STA 412+25.0	S	-	S

DURABLE LETTER OR SYMBOL, TYPE D TAPE
STA 412+07.0 RT, "S,I,G,N,A,L" (6 EA)

TEMPORARY LETTER OR SYMBOL, PAINT
STA 412+07.0 RT, "S,I,G,N,A,L" (12 EA)

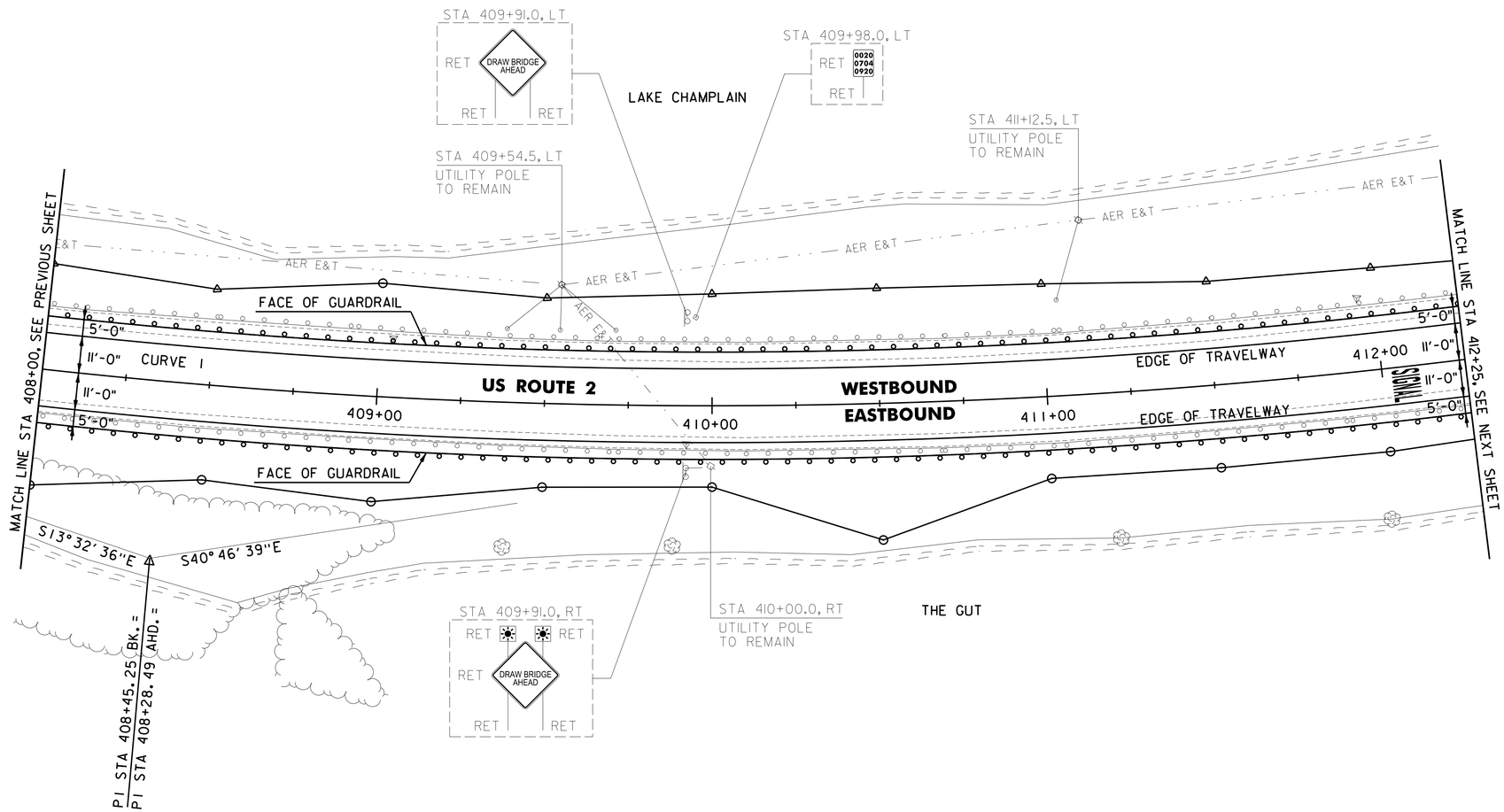

CURVE 1
Δ = 27° 14' 03" LT
D = 3° 07' 51"
R = 1830.00'
T = 443.30'
L = 869.84'
E = 52.93'
e = 0.054 FT/FT

SIGN LEGEND
R = REMOVE
S = SALVAGE
N = NEW
RET = RETAIN
B-B = BACK TO BACK
EXISTING = — — — — —
NEW = ————

SCALE 1" = 20'-0"
20 0 20

CHA

PROGRESS PLANS

PROJECT NAME: NORTH HERO GRAND ISLE BRIDGE
PROJECT NUMBER: BHF 028-1(26)

FILE NAME: z12b142bdr.dgn
PROJECT LEADER: D. GOZALKOWSKI
DESIGNED BY: J. PARRELLI
ROADWAY LAYOUT SHEET 2

PLOT DATE: 4/29/2016
DRAWN BY: A. KIRBY
CHECKED BY: J. SHIELDS
SHEET 22 OF 196

FILE NAME = V:\Projects\ANY\K3\28173\CADD_MSTN\12b142\Consultants\z12b142bdr.dgn
DATE/TIME = 4/29/2016
USER = 5237

STEEL BEAM GUARDRAIL, GALVANIZED
STA 412+25.0 - STA 416+50.0 LT
STA 412+25.0 - STA 416+50.0 RT

REMOVAL AND DISPOSAL OF GUARDRAIL
STA 412+25.0 - STA 416+50.0 LT
STA 412+25.0 - STA 416+50.0 RT

DURABLE 24 INCH STOP BAR
STA 416+00.0 RT

DURABLE 4 INCH WHITE LINE, TYPE A TAPE
AND TEMPORARY 4 INCH WHITE LINE, PAINT
(ALL LINES WILL INCLUDE EDGE LINE BREAKS AND RADIUS FOR TOWN HIGHWAYS)
STA 412+25.0 - STA 416+50.0 EDGE LINE LT & RT

DURABLE 4 INCH YELLOW LINE, TYPE A TAPE
AND TEMPORARY 4 INCH YELLOW LINE, PAINT
(ALL LINES WILL INCLUDE C/L BREAKS FOR TOWN HIGHWAYS)
S = SOLID, D = DASHED

	LT	℄	RT
STA 412+25.0 - STA 416+50.0	S	-	S

DURABLE LETTER OR SYMBOL, TYPE D TAPE
STA 412+47.0 RT, "A,H,E,A,D" (5 EA)

TEMPORARY LETTER OR SYMBOL, PAINT
STA 412+47.0 RT, "A,H,E,A,D" (10 EA)

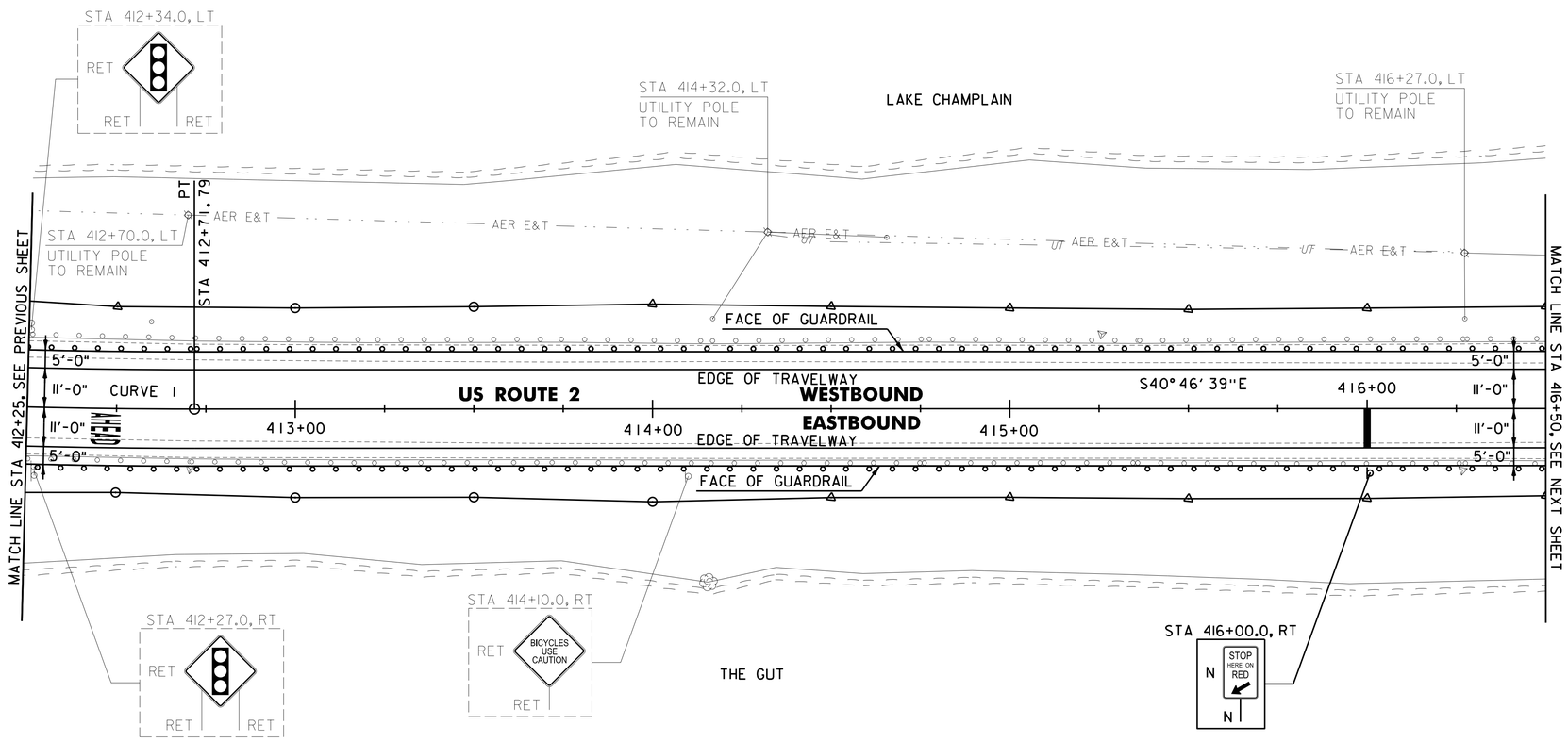

CURVE 1
Δ = 27° 14' 03" LT
D = 3° 07' 51"
R = 1830.00'
T = 443.30'
L = 869.84'
E = 52.93'
e = 0.054 FT/FT

SIGN LEGEND
R = REMOVE
S = SALVAGE
N = NEW
RET = RETAIN
B-B = BACK TO BACK
EXISTING = — — — — —
NEW = ————

SCALE 1" = 20'-0"
20 0 20

CHA

PROGRESS PLANS

PROJECT NAME: NORTH HERO GRAND ISLE BRIDGE
PROJECT NUMBER: BHF 028-1(26)

FILE NAME: z12b142bdr.dgn
PROJECT LEADER: D. GOZALKOWSKI
DESIGNED BY: J. PARRELLI
ROADWAY LAYOUT SHEET 3
PLOT DATE: 4/29/2016
DRAWN BY: A. KIRBY
CHECKED BY: J. SHIELDS
SHEET 23 OF 196

FILE NAME = V:\Projects\ANY\K3\28173\CADD_MSTN\12b142\Consultants\z12b142bdr.dgn
DATE/TIME = 4/29/2016
USER = 5237

STEEL BEAM GUARDRAIL, GALVANIZED
STA 416+50.0 - STA 417+70.5 LT
STA 416+50.0 - STA 417+70.5 RT
STA 420+29.5 - STA 420+61.5 LT
STA 420+29.5 - STA 421+50.0 RT
STA 421+15.8 - STA 421+50.0 LT

REMOVAL AND DISPOSAL OF GUARDRAIL
STA 416+50.0 - STA 417+69.8 LT
STA 416+50.0 - STA 417+69.8 RT
STA 420+29.9 - STA 421+50.0 RT
STA 420+30.1 - STA 420+63.5 LT
STA 421+15.8 - STA 421+50.0 LT

ANCHOR FOR STEEL BEAM RAIL
STA 420+55.0 LT
STA 421+22.3 LT

DELINEATOR WITH STEEL POST
STA 420+61.5 LT
STA 421+15.8 LT

DURABLE 4 INCH WHITE LINE, TYPE A TAPE AND TEMPORARY 4 INCH WHITE LINE, PAINT
(ALL LINES WILL INCLUDE EDGE LINE BREAKS AND RADIUS FOR TOWN HIGHWAYS)
STA 416+50.0 - STA 421+50.0 EDGE LINE LT & RT

DURABLE 4 INCH YELLOW LINE, TYPE A TAPE AND TEMPORARY 4 INCH YELLOW LINE, PAINT
(ALL LINES WILL INCLUDE C/L BREAKS FOR TOWN HIGHWAYS)
S = SOLID, D = DASHED

	LT	℄	RT
STA 416+50.0 - STA 421+50.0	S	-	S

6 INCH UNDERDRAIN PIPE
STA 420+50.0 - STA 421+35.0 LT

UNDERDRAIN FLUSHING BASIN
STA 420+50.0 LT

REMOVING SIGNS
AS SHOWN - 2

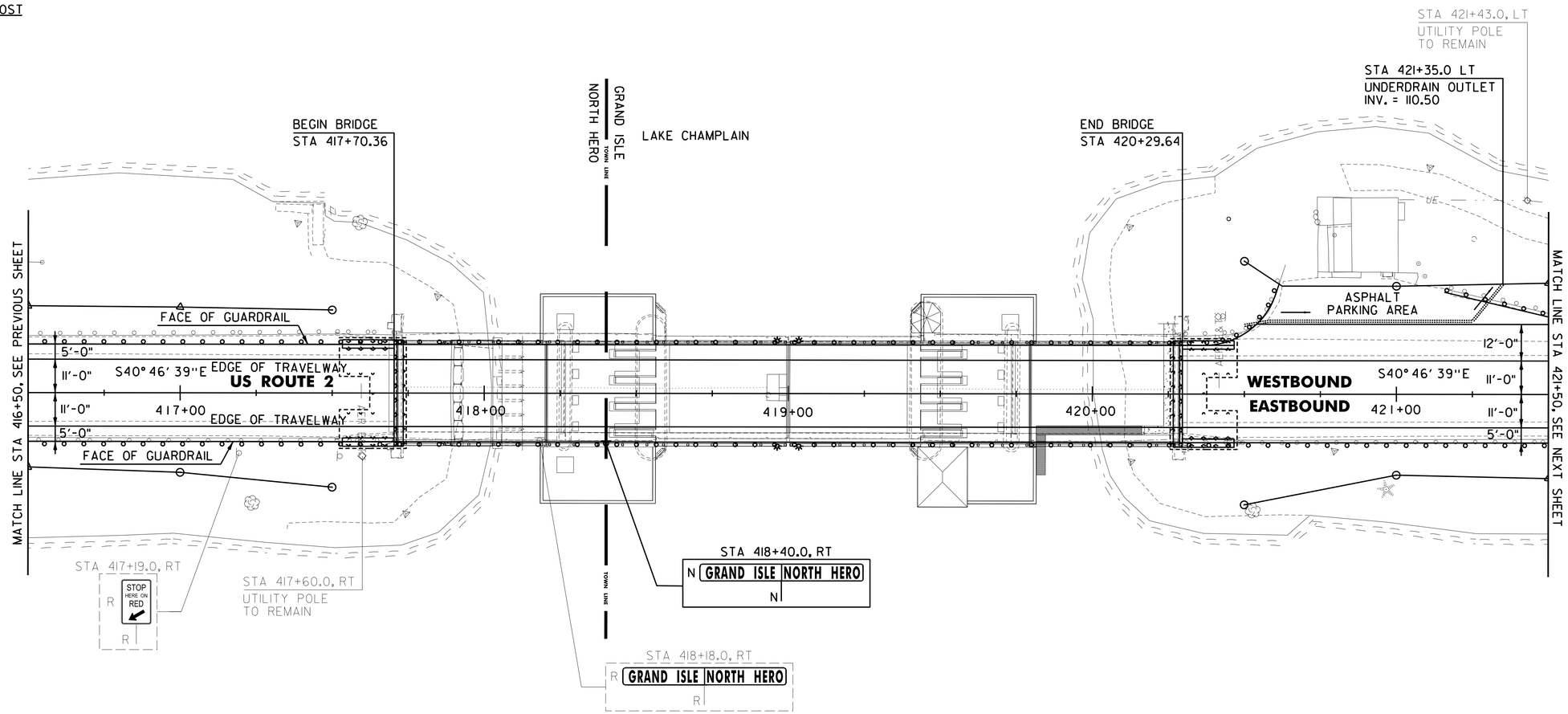

SIGN LEGEND
R = REMOVE
S = SALVAGE
N = NEW
RET = RETAIN
B-B = BACK TO BACK
EXISTING = — — — — —
NEW = ————

SCALE 1" = 20'-0"
20 0 20

CHA

PROGRESS PLANS

PROJECT NAME: NORTH HERO GRAND ISLE BRIDGE
PROJECT NUMBER: BHF 028-1(26)

FILE NAME: z12b142bdr.dgn
PROJECT LEADER: D. GOZALKOWSKI
DESIGNED BY: J. PARRELLI
ROADWAY LAYOUT SHEET 4

PLOT DATE: 4/29/2016
DRAWN BY: A. KIRBY
CHECKED BY: J. SHIELDS
SHEET 24 OF 196

FILE NAME = V:\Projects\ANY\K3\28173\CADD_MSTN\12b142\Consultants\z12b142bdr.dgn
DATE/TIME = 4/29/2016
USER = 5237

STEEL BEAM GUARDRAIL, GALVANIZED
STA 421+50.0 - STA 425+50.0 LT
STA 421+50.0 - STA 425+50.0 RT

REMOVAL AND DISPOSAL OF GUARDRAIL
STA 421+50.0 - STA 425+50.0 LT
STA 421+50.0 - STA 425+50.0 RT

DURABLE 4 INCH WHITE LINE, TYPE A TAPE AND TEMPORARY 4 INCH WHITE LINE, PAINT
(ALL LINES WILL INCLUDE EDGE LINE BREAKS AND RADIUS FOR TOWN HIGHWAYS)
STA 421+50.0 - STA 425+50.0 EDGE LINE LT & RT

DURABLE 4 INCH YELLOW LINE, TYPE A TAPE AND TEMPORARY 4 INCH YELLOW LINE, PAINT
(ALL LINES WILL INCLUDE C/L BREAKS FOR TOWN HIGHWAYS)
S = SOLID, D = DASHED

	LT	℄	RT
STA 421+50.0 - STA 425+50.0	S	-	S

DURABLE 24 INCH STOP BAR
STA 422+00.0 LT

REMOVING SIGNS
AS SHOWN - 1

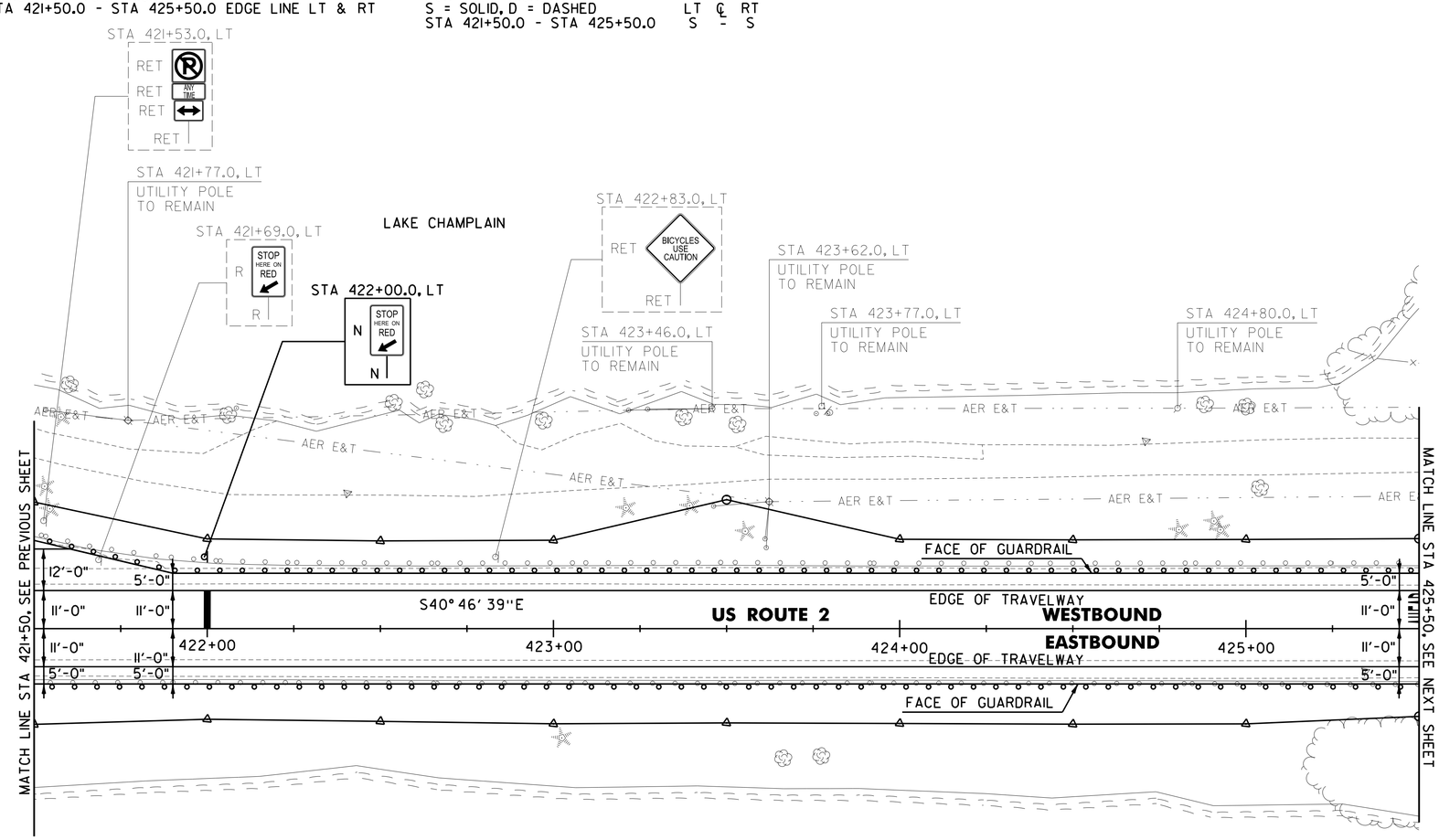

THE GUT

SIGN LEGEND
R = REMOVE
S = SALVAGE
N = NEW
RET = RETAIN
B-B = BACK TO BACK
EXISTING = — — — — —
NEW = ————

SCALE 1" = 20'-0"
20 0 20

CHA

PROGRESS PLANS

PROJECT NAME: NORTH HERO GRAND ISLE BRIDGE
PROJECT NUMBER: BHF 028-1(26)

FILE NAME: z12b142bdr.dgn
PROJECT LEADER: D. GOZALKOWSKI
DESIGNED BY: J. PARRELLI
ROADWAY LAYOUT SHEET 5

PLOT DATE: 4/29/2016
DRAWN BY: A. KIRBY
CHECKED BY: J. SHIELDS
SHEET 25 OF 196

FILE NAME = V:\Projects\ANY\K3\28173\CADD_MSTN\12b142\Consultants\z12b142bdr.dgn
DATE/TIME = 4/29/2016
USER = 5237

STEEL BEAM GUARDRAIL, GALVANIZED
STA 425+50.0 STA 429+50.0 LT
STA 425+50.0 STA 429+50.0 RT

REMOVAL AND DISPOSAL OF GUARDRAIL
STA 425+50.0 STA 429+50.0 LT
STA 425+50.0 STA 428+57.4 RT

DURABLE 4 INCH WHITE LINE, TYPE A TAPE AND TEMPORARY 4 INCH WHITE LINE, PAINT
(ALL LINES WILL INCLUDE EDGE LINE BREAKS AND RADIUS FOR TOWN HIGHWAYS)
STA 425+50.0 - STA 429+50.0 EDGE LINE LT & RT

DURABLE 4 INCH YELLOW LINE, TYPE A TAPE AND TEMPORARY 4 INCH YELLOW LINE, PAINT
(ALL LINES WILL INCLUDE C/L BREAKS FOR TOWN HIGHWAYS)
S = SOLID, D = DASHED LT ℄ RT
STA 425+50.0 - STA 429+50.0 S - S

DURABLE LETTER OR SYMBOL, TYPE D TAPE
STA 425+51.0 LT, "A,H,E,A,D" (5 EA)
STA 425+91.0 LT, "S,I,G,N,A,L" (6 EA)

TEMPORARY LETTER OR SYMBOL, PAINT
STA 425+51.0 LT, "A,H,E,A,D" (10 EA)
STA 425+91.0 LT, "S,I,G,N,A,L" (12 EA)

6 INCH UNDERDRAIN PIPE
STA 429+25.0 - STA 429+50.0 LT
STA 429+25.0 - STA 429+50.0 RT

REMOVING SIGNS
AS SHOWN - 3

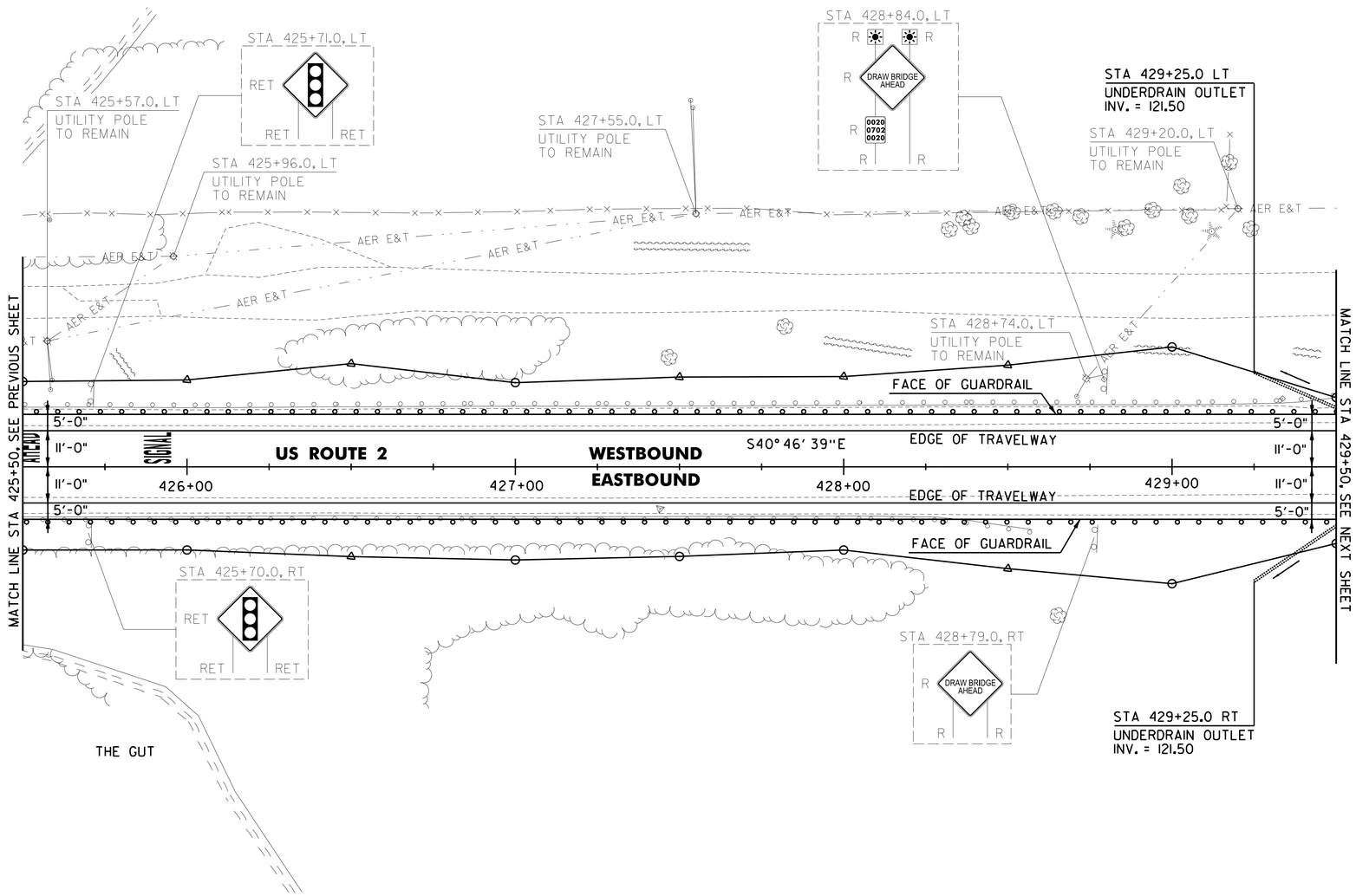

SIGN LEGEND
R = REMOVE
S = SALVAGE
N = NEW
RET = RETAIN
B-B = BACK TO BACK
EXISTING = — — — — —
NEW = ————

SCALE 1" = 20'-0"
20 0 20

CHA

PROGRESS PLANS

PROJECT NAME: NORTH HERO GRAND ISLE BRIDGE
PROJECT NUMBER: BHF 028-1(26)

FILE NAME: z12b142bdr.dgn
PROJECT LEADER: D. GOZALKOWSKI
DESIGNED BY: J. PARRELLI
ROADWAY LAYOUT SHEET 6

PLOT DATE: 4/29/2016
DRAWN BY: A. KIRBY
CHECKED BY: J. SHIELDS
SHEET 26 OF 196

FILE NAME = V:\Projects\ANY\K3\28173\CADD_MSTN\12b142\Consultants\z12b142bdr.dgn
DATE/TIME = 4/29/2016
USER = 5237

STEEL BEAM GUARDRAIL, GALVANIZED
STA 429+50.0 - STA 429+66.2 RT
STA 429+50.0 - STA 430+13.5 LT

REMOVAL AND DISPOSAL OF GUARDRAIL
STA 429+50.0 STA 429+65.6 LT

ANCHOR FOR STEEL BEAM RAIL
STA 429+59.7 RT
STA 430+07.0 LT

DELINEATOR WITH STEEL POST
STA 429+66.2 RT
STA 430+13.5 LT

DURABLE 4 INCH WHITE LINE, TYPE A TAPE AND TEMPORARY 4 INCH WHITE LINE, PAINT
(ALL LINES WILL INCLUDE EDGE LINE BREAKS AND RADIUS FOR TOWN HIGHWAYS)
STA 429+50.0 - STA 433+50.0 EDGE LINE LT & RT

DURABLE 4 INCH YELLOW LINE, TYPE A TAPE AND TEMPORARY 4 INCH YELLOW LINE, PAINT
(ALL LINES WILL INCLUDE C/L BREAKS FOR TOWN HIGHWAYS)
S = SOLID, D = DASHED LT ℄ RT
STA 429+50.0 - STA 433+50.0 S - S

6 INCH UNDERDRAIN PIPE
STA 429+50.0 - STA 433+50.0 LT
STA 429+50.0 - STA 433+50.0 RT

UNDERDRAIN FLUSHING BASIN
STA 431+00.0 LT
STA 431+00.0 RT
STA 433+00.0 LT
STA 433+00.0 RT

REMOVING SIGNS
AS SHOWN - 1

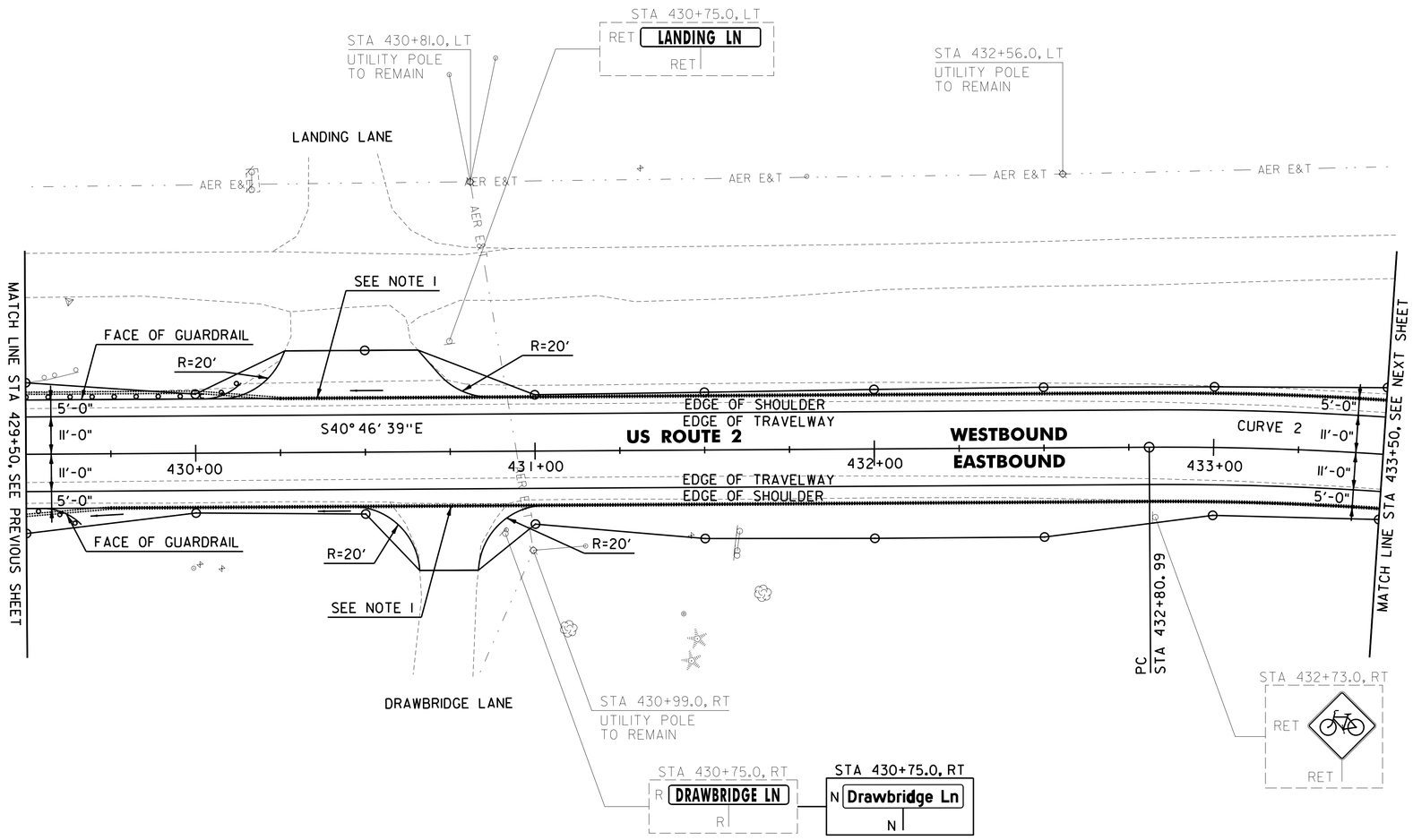

NOTE:

1. THE COST OF THE DRIVEWAY RESTORATION SHALL BE INCIDENTAL TO THE COST OF THE UNDERDRAIN INSTALLATION.

CURVE 2
Δ = 47°33'27" RT
D = 6°05'43"
R = 940.00'
T = 414.17'
L = 780.23'
E = 87.20'
e = 0.078 FT/FT

SIGN LEGEND
R = REMOVE
S = SALVAGE
N = NEW
RET = RETAIN
B-B = BACK TO BACK
EXISTING = - - - - - -
NEW = ———

SCALE 1" = 20'-0"
20 0 20

CHA

PROGRESS PLANS

PROJECT NAME: NORTH HERO GRAND ISLE BRIDGE
PROJECT NUMBER: BHF 028-1(26)

FILE NAME: z12b142bdr.dgn
PROJECT LEADER: D. GOZALKOWSKI
DESIGNED BY: J. PARRELLI
ROADWAY LAYOUT SHEET 7
PLOT DATE: 4/29/2016
DRAWN BY: A. KIRBY
CHECKED BY: J. SHIELDS
SHEET 27 OF 196

FILE NAME = V:\Projects\ANY\K3\28173\CADD_MSTN\12b142\Consultants\z12b142bdr.dgn
DATE/TIME = 4/29/2016
USER = 5237

DURABLE 4 INCH WHITE LINE, TYPE A TAPE
AND TEMPORARY 4 INCH WHITE LINE, PAINT
(ALL LINES WILL INCLUDE EDGE LINE BREAKS AND
RADIUS FOR TOWN HIGHWAYS)
STA 433+50.0 - STA 436+00.0 EDGE LINE LT & RT

DURABLE 4 INCH YELLOW LINE, TYPE A TAPE
AND TEMPORARY 4 INCH YELLOW LINE, PAINT
(ALL LINES WILL INCLUDE C/L BREAKS
FOR TOWN HIGHWAYS)
S = SOLID, D = DASHED LT ℄ RT
STA 433+50.0 - STA 436+00.0 S - S

6 INCH UNDERDRAIN PIPE
STA 433+50.0 - STA 435+00.0 LT
STA 433+50.0 - STA 435+00.0 RT

UNDERDRAIN FLUSHING BASIN
STA 435+00.0 LT
STA 435+00.0 RT

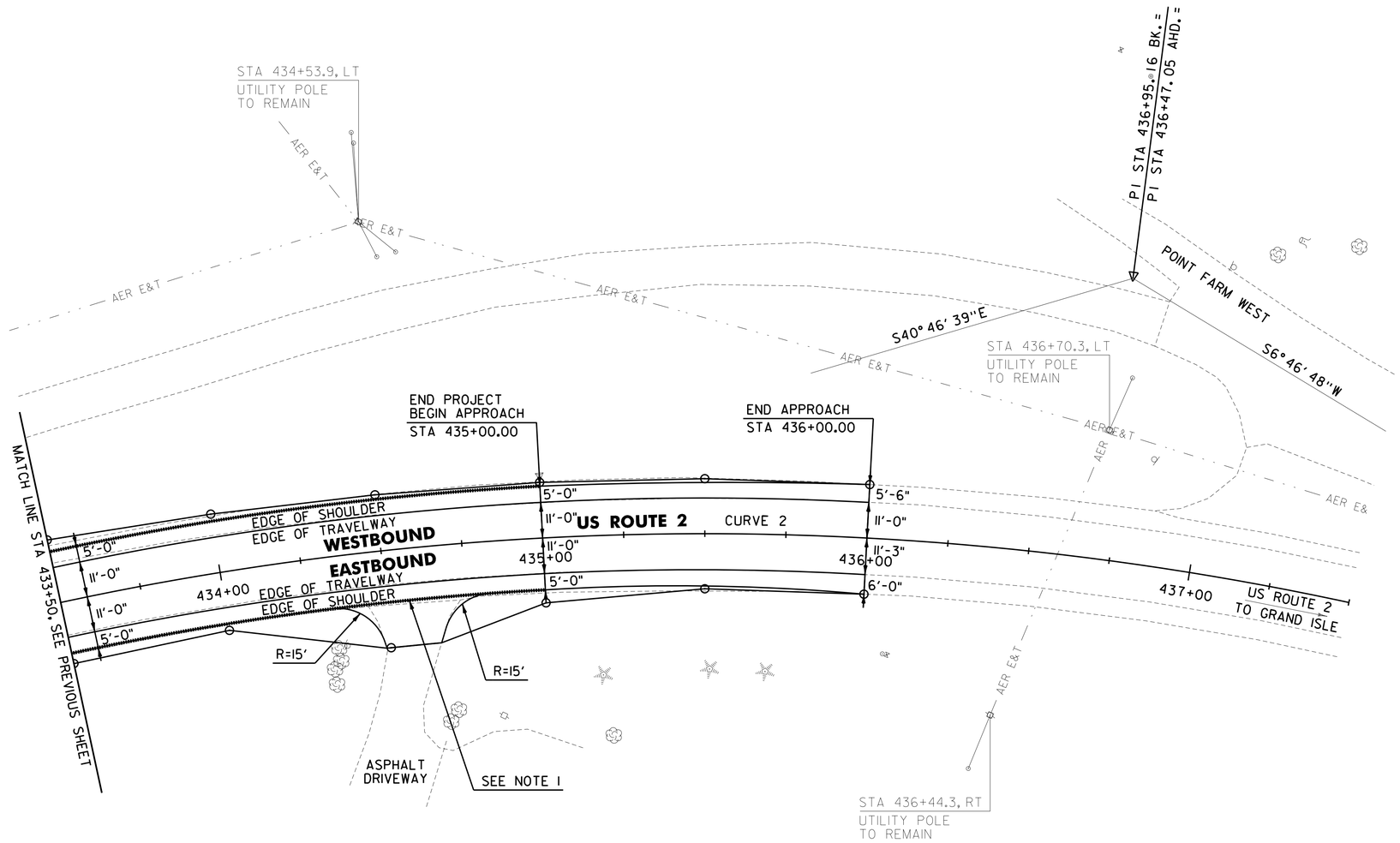

NOTE:

1. THE COST OF THE DRIVEWAY RESTORATION SHALL BE INCIDENTAL TO THE COST OF THE UNDERDRAIN INSTALLATION.

CURVE 2
△ = 47° 33' 27" RT
D = 6° 05' 43"
R = 940.00'
T = 414.17'
L = 780.23'
E = 87.20'
e = 0.078 FT/FT

SIGN LEGEND
R = REMOVE
S = SALVAGE
N = NEW
RET = RETAIN
B-B = BACK TO BACK
EXISTING = - - - - - -
NEW = ————

SCALE 1" = 20'-0"
20 0 20

CHA

PROGRESS PLANS

PROJECT NAME: NORTH HERO GRAND ISLE BRIDGE
PROJECT NUMBER: BHF 028-1(26)

FILE NAME: z12b142bdr.dgn
PROJECT LEADER: D. GOZALKOWSKI
DESIGNED BY: J. PARRELLI
ROADWAY LAYOUT SHEET 8
PLOT DATE: 4/29/2016
DRAWN BY: A. KIRBY
CHECKED BY: J. SHIELDS
SHEET 28 OF 196

FILE NAME = V:\Projects\ANY\K3\28173\CADD_MSTN\12b142\Consultants\z12b142bdr.dgn
DATE/TIME = 4/29/2016
USER = 5237

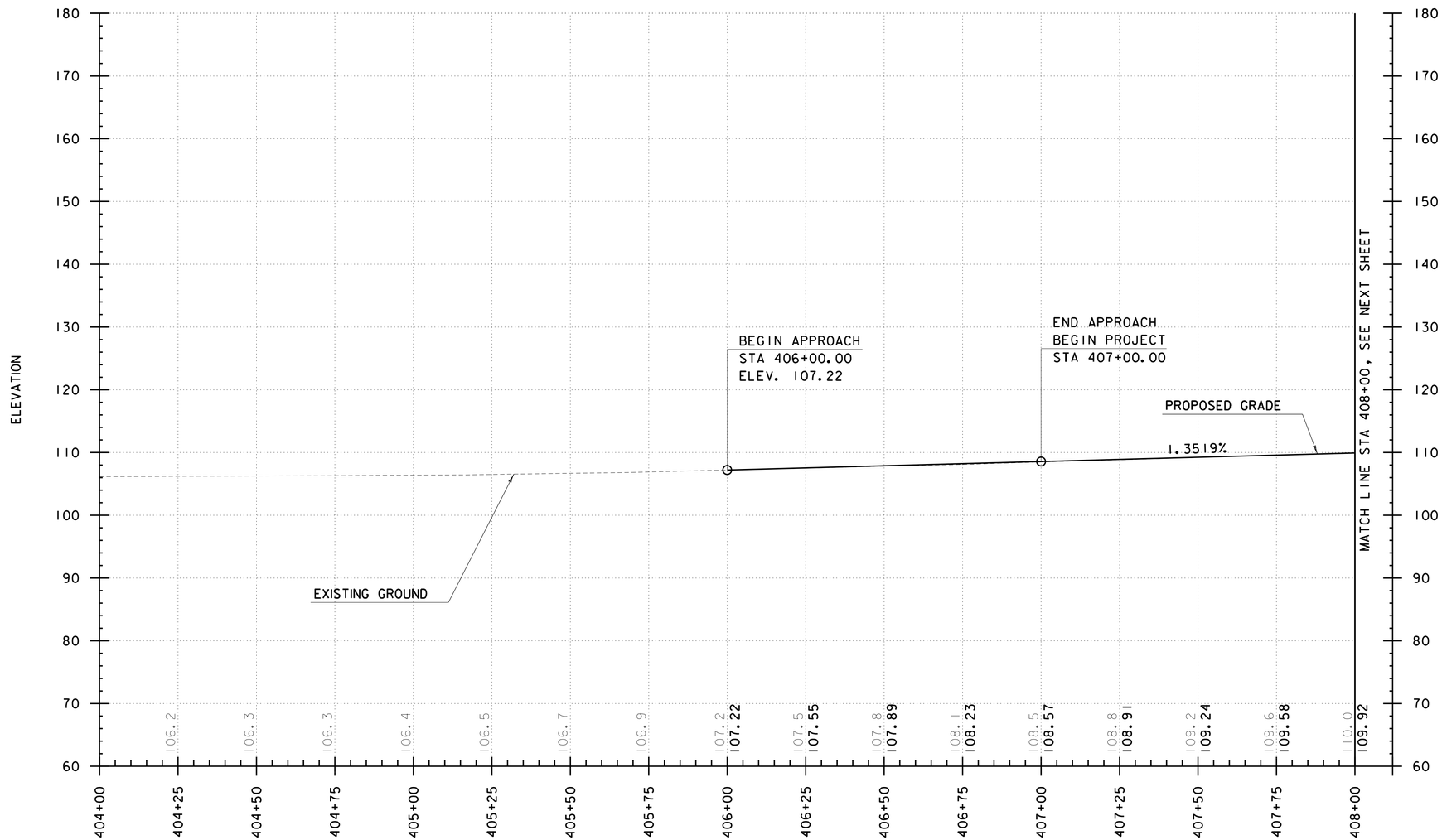

PROFILE - US ROUTE 2

SCALE: HORIZONTAL 1" = 20'
VERTICAL 1" = 10'

PROGRESS PLANS

PROJECT NAME: NORTH HERO GRAND ISLE BRIDGE
PROJECT NUMBER: BHF 028-1(26)

FILE NAME: z12b142pro.dgn
PROJECT LEADER: D. GOZALKOWSKI
DESIGNED BY: J. PARRELLI
PROFILE SHEET 1

PLOT DATE: 4/29/2016
DRAWN BY: A. KIRBY
CHECKED BY: J. SHIELDS
SHEET 29 OF 196

CHA

FILE NAME = V:\Projects\ANY\K3\28173\CADD_MSTN\12b142\Consultants\z12b142pro.dgn
DATE/TIME = 4/29/2016
USER = 5237

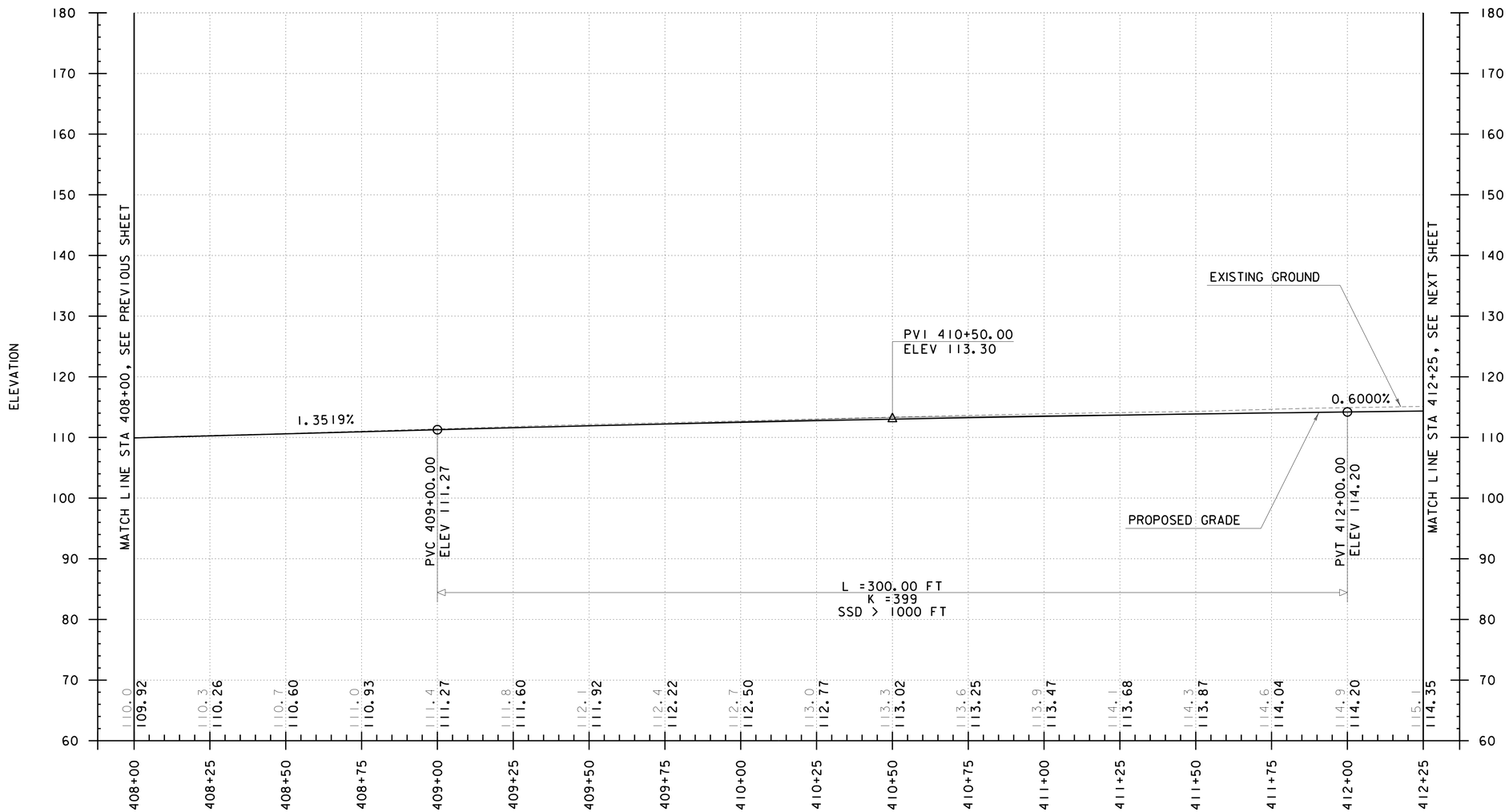

PROFILE - US ROUTE 2

SCALE: HORIZONTAL 1" = 20'
VERTICAL 1" = 10'

PROGRESS PLANS

PROJECT NAME: NORTH HERO GRAND ISLE BRIDGE
PROJECT NUMBER: BHF 028-1(26)

FILE NAME: zl2bl42pro.dgn
PROJECT LEADER: D. GOZALKOWSKI
DESIGNED BY: J. PARRELLI
PROFILE SHEET 2

PLOT DATE: 4/29/2016
DRAWN BY: A. KIRBY
CHECKED BY: J. SHIELDS
SHEET 30 OF 196

CHA

FILE NAME = V:\Projects\ANY\K3\28173\CADD_MSTN\12bl42\Consultants\zl2bl42pro.dgn
DATE/TIME = 4/29/2016
USER = 5237

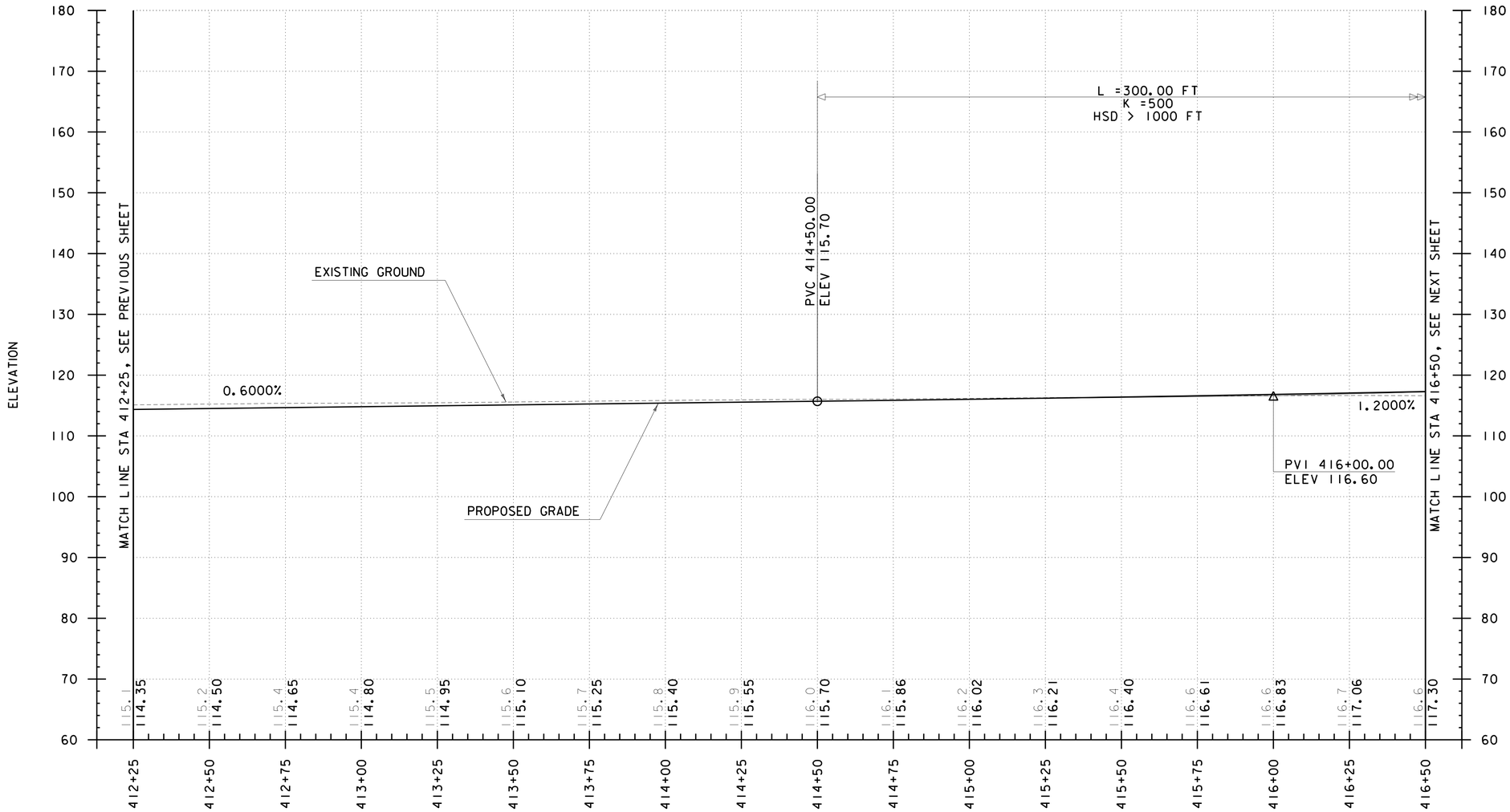

PROFILE - US ROUTE 2

SCALE: HORIZONTAL 1" = 20'
VERTICAL 1" = 10'

PROGRESS PLANS

PROJECT NAME: NORTH HERO GRAND ISLE BRIDGE
PROJECT NUMBER: BHF 028-1(26)

FILE NAME: zl2bl42pro.dgn
PROJECT LEADER: D. GOZALKOWSKI
DESIGNED BY: J. PARRELLI
PROFILE SHEET 3

PLOT DATE: 4/29/2016
DRAWN BY: A. KIRBY
CHECKED BY: J. SHIELDS
SHEET 31 OF 196

CHA

FILE NAME = V:\Projects\ANY\K3\28173\CADD_MSTN\12bl42\Consultants\zl2bl42pro.dgn
DATE/TIME = 4/29/2016
USER = 5237

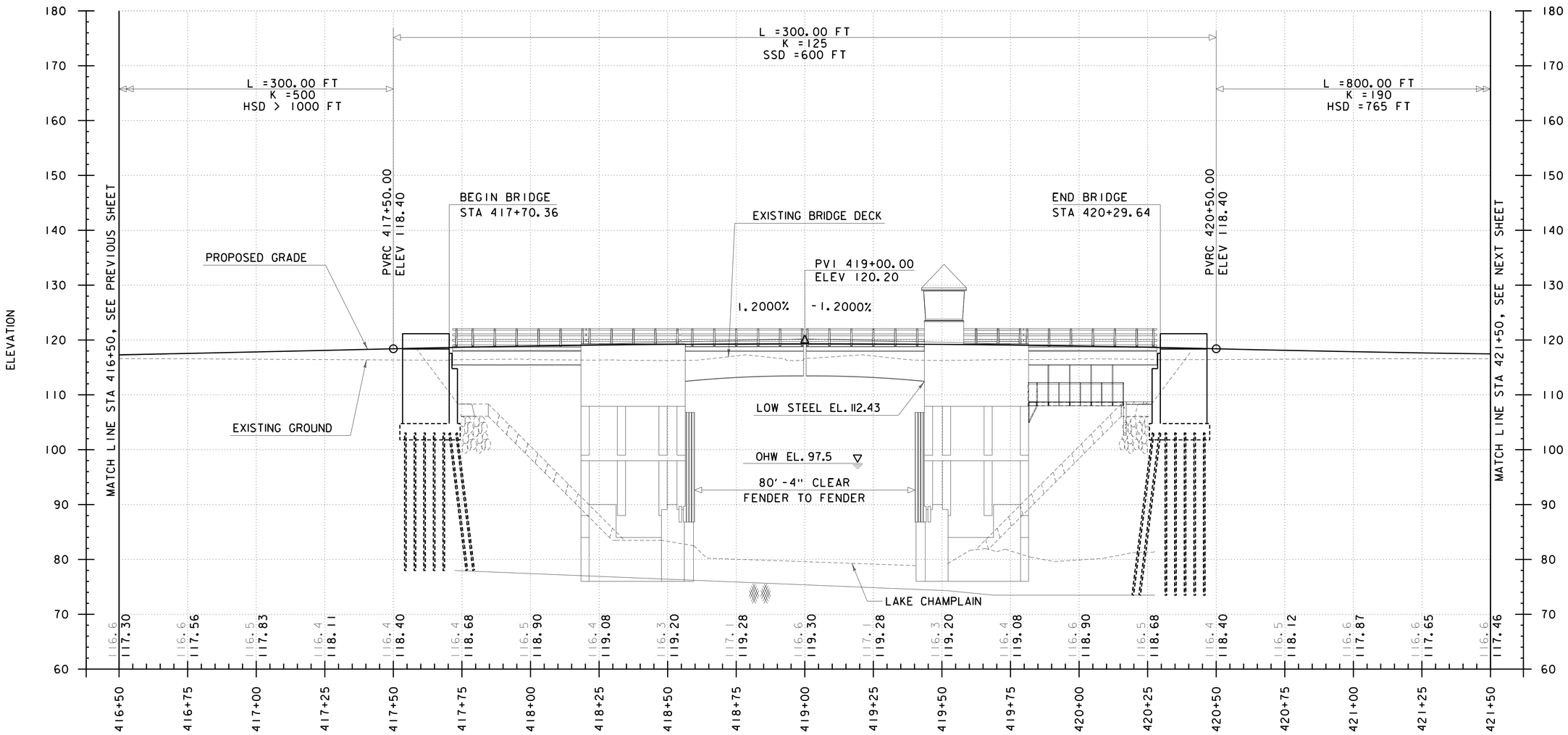

PROFILE - US ROUTE 2

SCALE: HORIZONTAL 1" = 20'
VERTICAL 1" = 10'

PROGRESS PLANS

PROJECT NAME: NORTH HERO GRAND ISLE BRIDGE
PROJECT NUMBER: BHF 028-1(26)

FILE NAME: z12b142pro.dgn
PROJECT LEADER: D. GOZALKOWSKI
DESIGNED BY: J. PARRELLI
PROFILE SHEET 4

PLOT DATE: 4/29/2016
DRAWN BY: A. KIRBY
CHECKED BY: J. SHIELDS
SHEET 32 OF 196

CHA

FILE NAME = V:\Projects\ANY\K3\28173\CADD_MSTN\12b142\Consultants\z12b142pro.dgn
DATE/TIME = 4/29/2016
USER = 5237

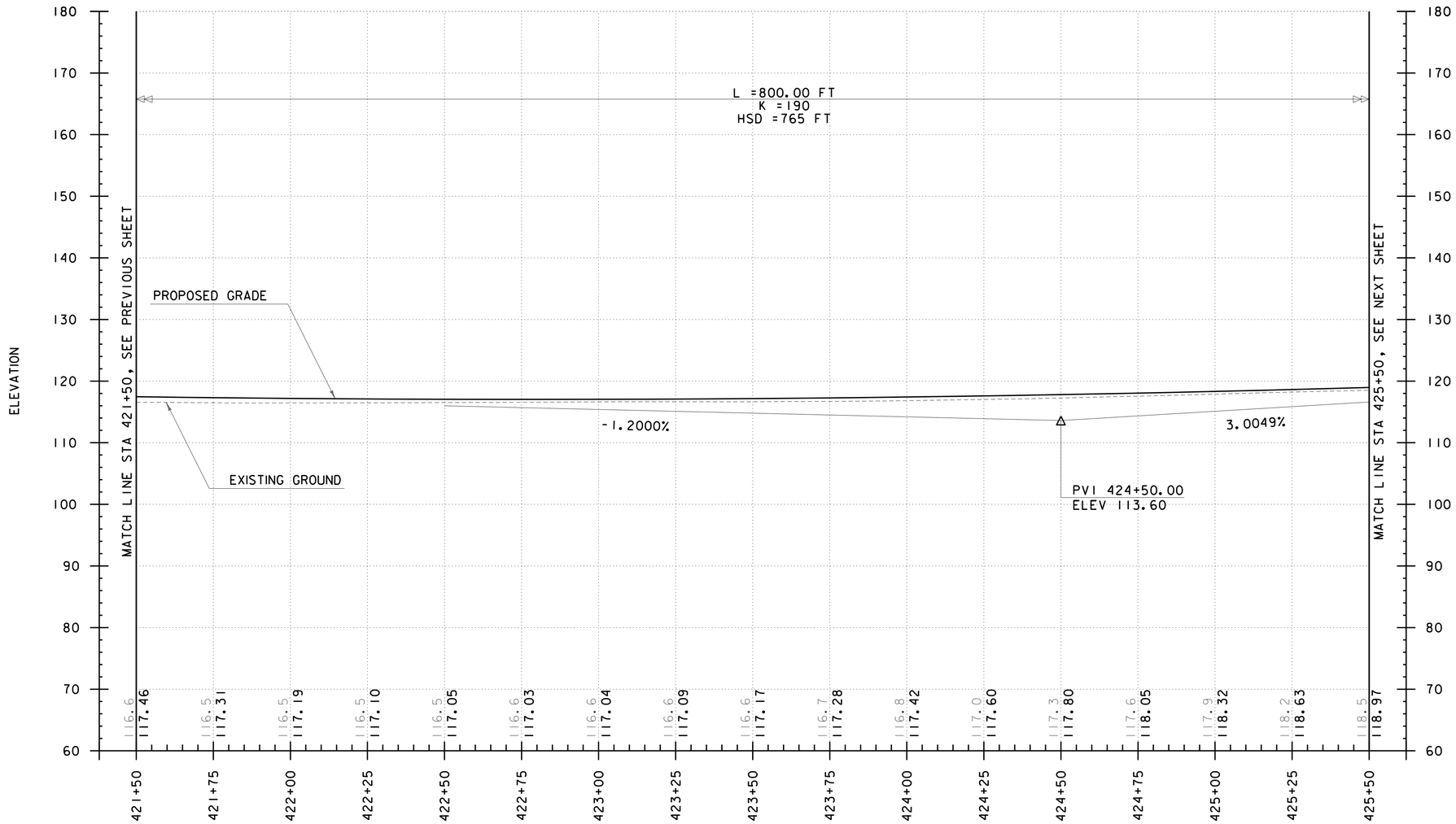

PROFILE - US ROUTE 2

SCALE: HORIZONTAL 1" = 20'
VERTICAL 1" = 10'

PROGRESS PLANS

PROJECT NAME: NORTH HERO GRAND ISLE BRIDGE
PROJECT NUMBER: BHF 028-1(26)

FILE NAME: z12b142pro.dgn
PROJECT LEADER: D. GOZALKOWSKI
DESIGNED BY: J. PARRELLI
PROFILE SHEET 5

PLOT DATE: 4/29/2016
DRAWN BY: A. KIRBY
CHECKED BY: J. SHIELDS
SHEET 33 OF 196

CHA

FILE NAME = V:\Projects\ANY\K3\28173\CADD_MSTN\12b142\Consultants\z12b142pro.dgn
DATE/TIME = 4/29/2016
USER = 5237

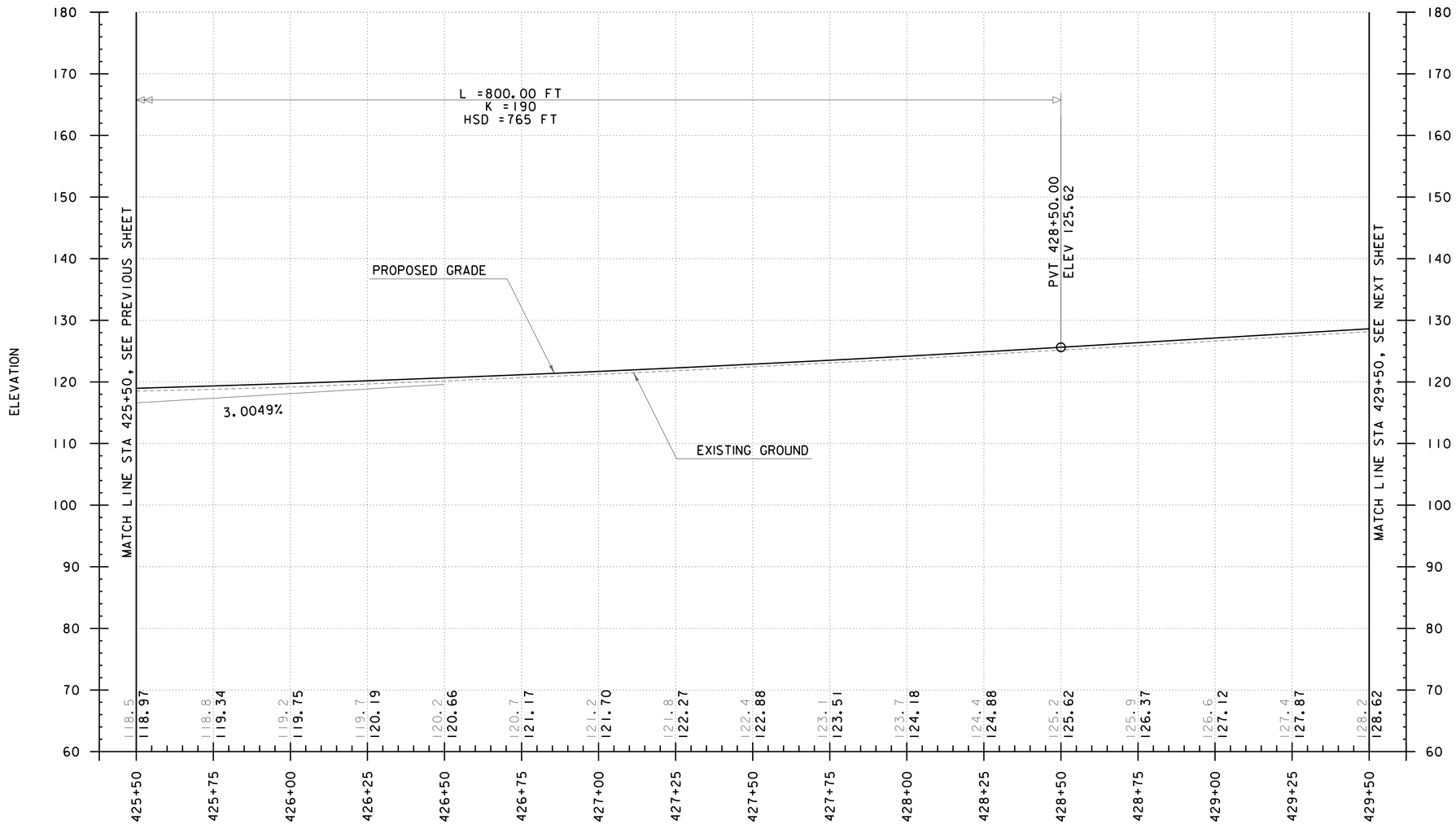

PROFILE - US ROUTE 2

SCALE: HORIZONTAL 1" = 20'
VERTICAL 1" = 10'

PROGRESS PLANS

PROJECT NAME: NORTH HERO GRAND ISLE BRIDGE
PROJECT NUMBER: BHF 028-1(26)

FILE NAME: z12b142pro.dgn
PROJECT LEADER: D. GOZALKOWSKI
DESIGNED BY: J. PARRELLI
PROFILE SHEET 6

PLOT DATE: 4/29/2016
DRAWN BY: A. KIRBY
CHECKED BY: J. SHIELDS
SHEET 34 OF 196

CHA

FILE NAME = V:\Projects\ANY\K3\28173\CADD_MSTN\12b142\Consultants\z12b142pro.dgn
DATE/TIME = 4/29/2016
USER = 5237

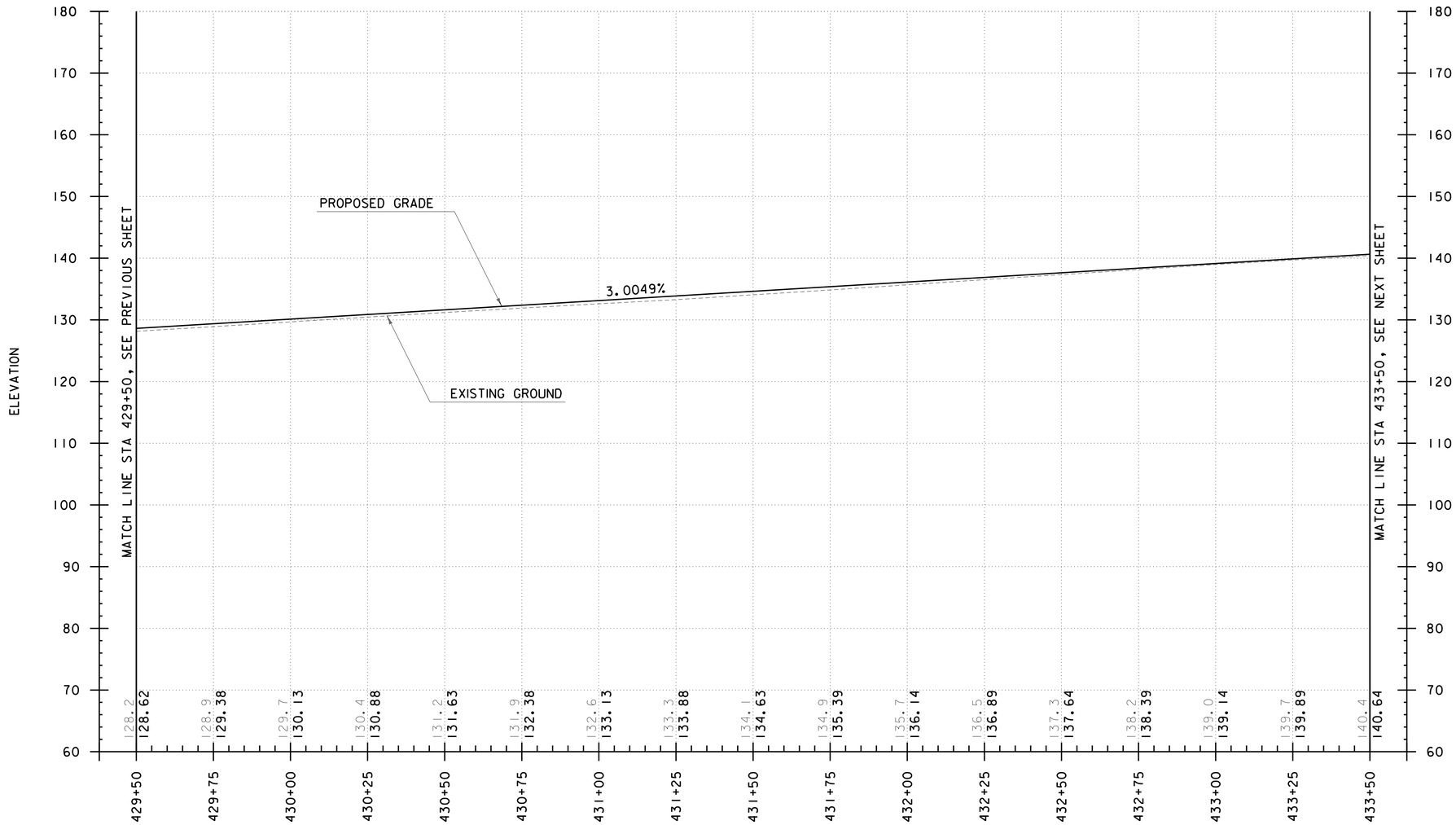

PROFILE - US ROUTE 2

SCALE: HORIZONTAL 1" = 20'
VERTICAL 1" = 10'

PROGRESS PLANS

PROJECT NAME: NORTH HERO GRAND ISLE BRIDGE
PROJECT NUMBER: BHF 028-1(26)

FILE NAME: z12b142pro.dgn
PROJECT LEADER: D. GOZALKOWSKI
DESIGNED BY: J. PARRELLI
PROFILE SHEET 7

PLOT DATE: 4/29/2016
DRAWN BY: A. KIRBY
CHECKED BY: J. SHIELDS
SHEET 35 OF 196

CHA

FILE NAME = V:\Projects\ANY\K3\28173\CADD_MSTN\12b142\Consultants\z12b142pro.dgn
DATE/TIME = 4/29/2016
USER = 5237

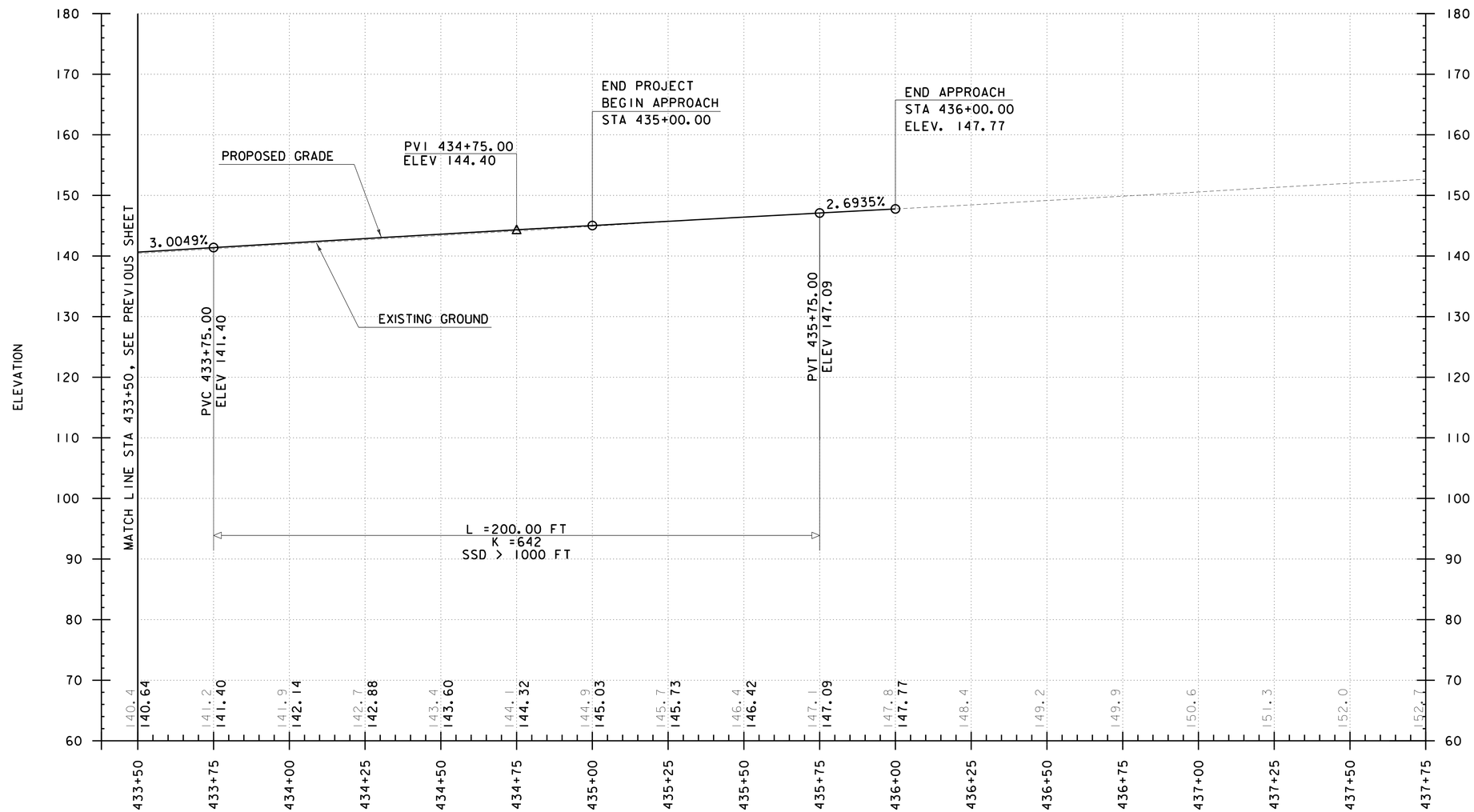

PROFILE - US ROUTE 2

SCALE: HORIZONTAL 1" = 20'
VERTICAL 1" = 10'

PROGRESS PLANS

PROJECT NAME: NORTH HERO GRAND ISLE BRIDGE
PROJECT NUMBER: BHF 028-1(26)

FILE NAME: z12b142pro.dgn
PROJECT LEADER: D. GOZALKOWSKI
DESIGNED BY: J. PARRELLI
PROFILE SHEET 8

PLOT DATE: 4/29/2016
DRAWN BY: A. KIRBY
CHECKED BY: J. SHIELDS
SHEET 36 OF 196

CHA

FILE NAME = V:\Projects\ANY\K3\28173\CADD_MSTN\12b142\Consultants\z12b142pro.dgn
DATE/TIME = 4/29/2016
USER = 5237

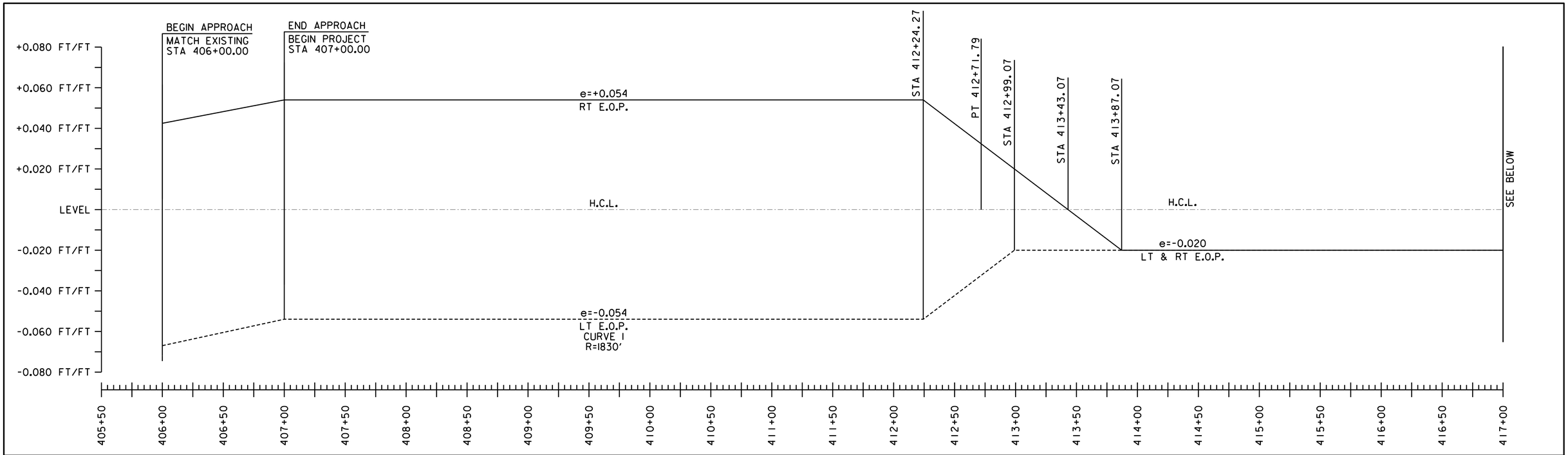

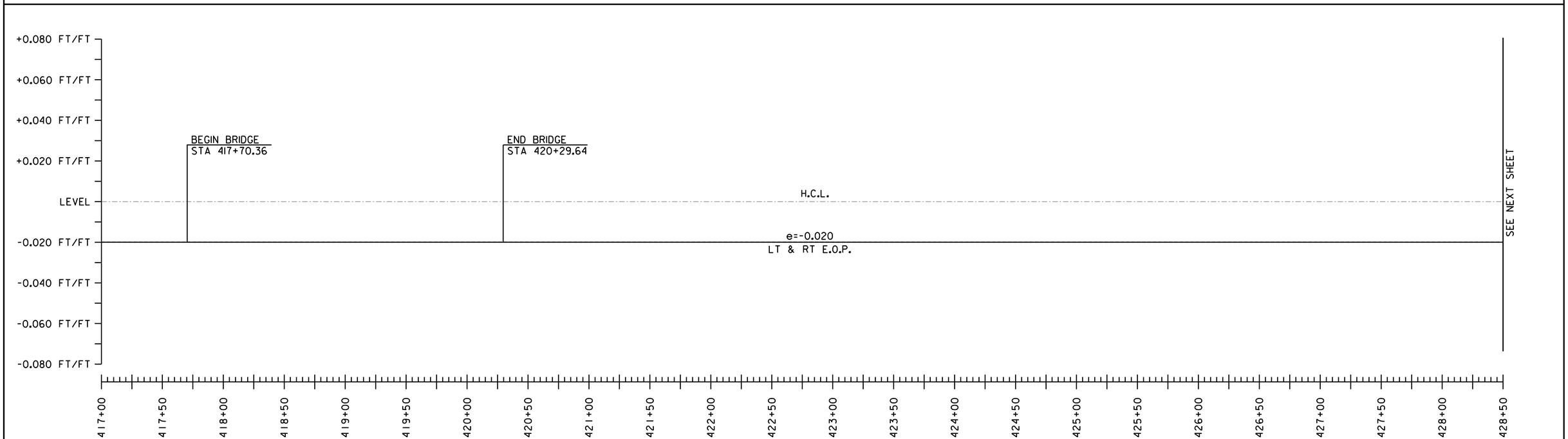

PROGRESS PLANS

SUPERELEVATION BANKING NOTES:

1. SUPERELEVATION RATES AND RUNOFF LENGTHS WERE DETERMINED USING A DESIGN SPEED EQUAL TO THE POSTED SPEED AND A MAXIMUM SUPERELEVATION RATE OF 0.08. A MAXIMUM SUPERELEVATION RATE OF 0.06 WAS USED WHERE SIDE ROADS INTERSECTED ALONG THE HIGH SIDE OF A CURVE.

2. THE SHOULDER CROSS SLOPE ON THE OUTSIDE (HIGH SIDE) OF A SUPERELEVATED CURVE SHALL HAVE A MAX ROLLOVER OF 0.070.

NOT TO SCALE

CHA

PROJECT NAME: NORTH HERO GRAND ISLE BRIDGE
PROJECT NUMBER: BHF 028-1(26)

FILE NAME: zl2bl42sbd.dgn
PROJECT LEADER: D. GOZALKOWSKI
DESIGNED BY: J. PARRELLI
SUPERELEVATION DIAGRAM SHEET 1

PLOT DATE: 4/29/2016
DRAWN BY: C.ANDERSON
CHECKED BY: J. SHIELDS
SHEET 37 OF 196

FILE NAME = V:\Projects\ANY\K3\28173\CADD_MSTN\12bl42\Consultants\zl2bl42sbd.dgn
DATE/TIME = 4/29/2016
USER = 5237

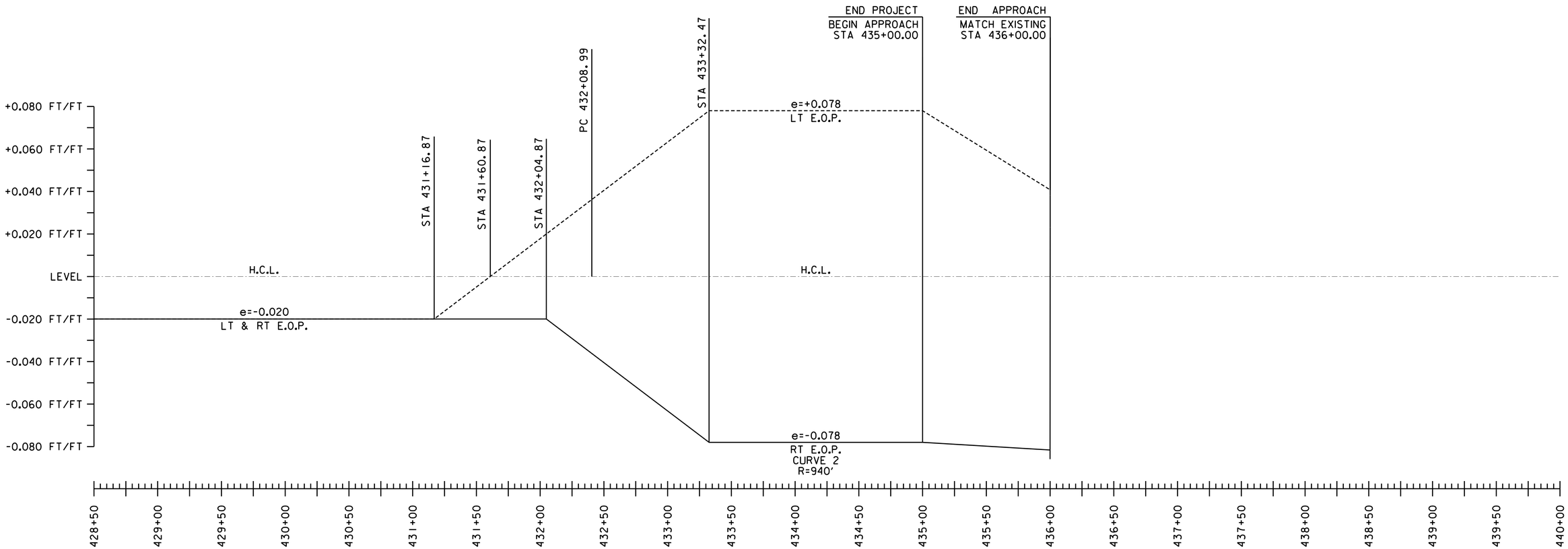

PROGRESS PLANS

SUPERELEVATION BANKING NOTES:

1. SUPERELEVATION RATES AND RUNOFF LENGTHS WERE DETERMINED USING A DESIGN SPEED EQUAL TO THE POSTED SPEED AND A MAXIMUM SUPERELEVATION RATE OF 0.08. A MAXIMUM SUPERELEVATION RATE OF 0.06 WAS USED WHERE SIDE ROADS INTERSECTED ALONG THE HIGH SIDE OF A CURVE.

2. THE SHOULDER CROSS SLOPE ON THE OUTSIDE (HIGH SIDE) OF A SUPERELEVATED CURVE SHALL HAVE A MAX ROLLOVER OF 0.070.

NOT TO SCALE

CHA

PROJECT NAME: NORTH HERO GRAND ISLE BRIDGE
PROJECT NUMBER: BHF 028-1(26)

FILE NAME: zl2bl42sbd.dgn	PLOT DATE: 4/29/2016
PROJECT LEADER: D. GOZALKOWSKI	DRAWN BY: C.ANDERSON
DESIGNED BY: J. PARRELLI	CHECKED BY: J. SHIELDS
SUPERELEVATION DIAGRAM SHEET 2	SHEET 38 OF 196

FILE NAME = V:\Projects\ANY\K3\28173\CADD_MSTN\12bl42\Consultants\zl2bl42sbd.dgn
DATE/TIME = 4/29/2016
USER = 5237

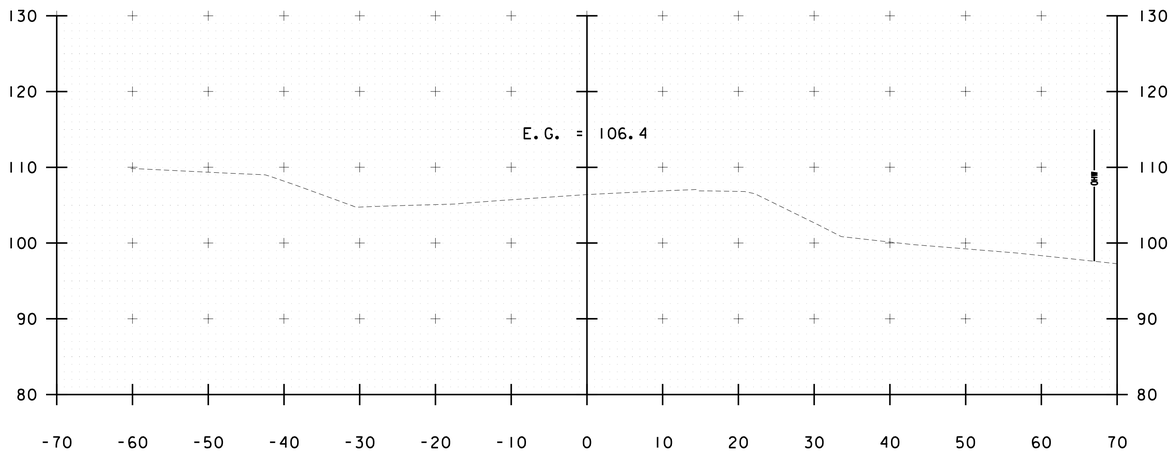

405+00

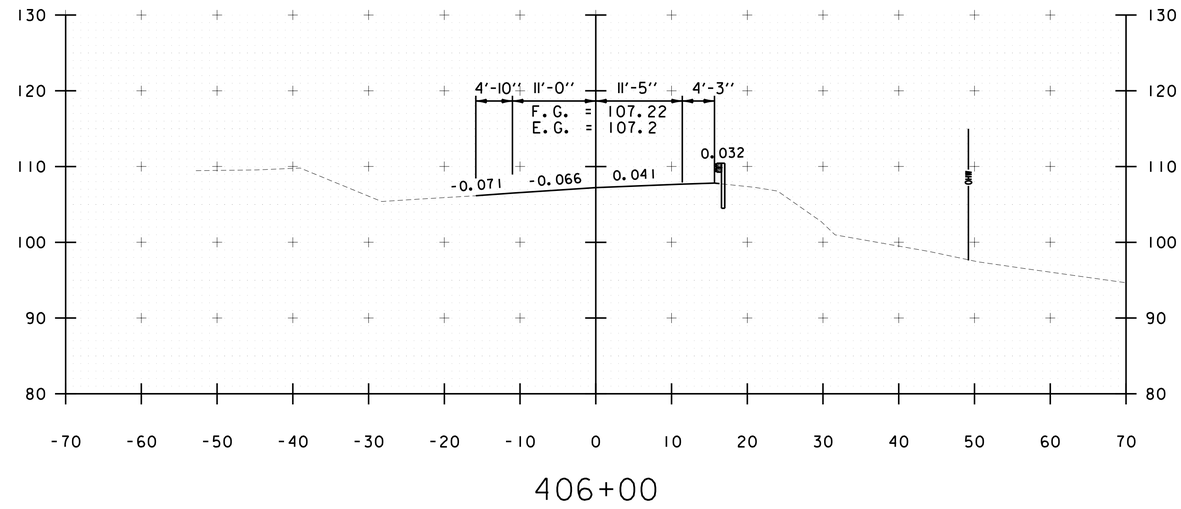

406+00

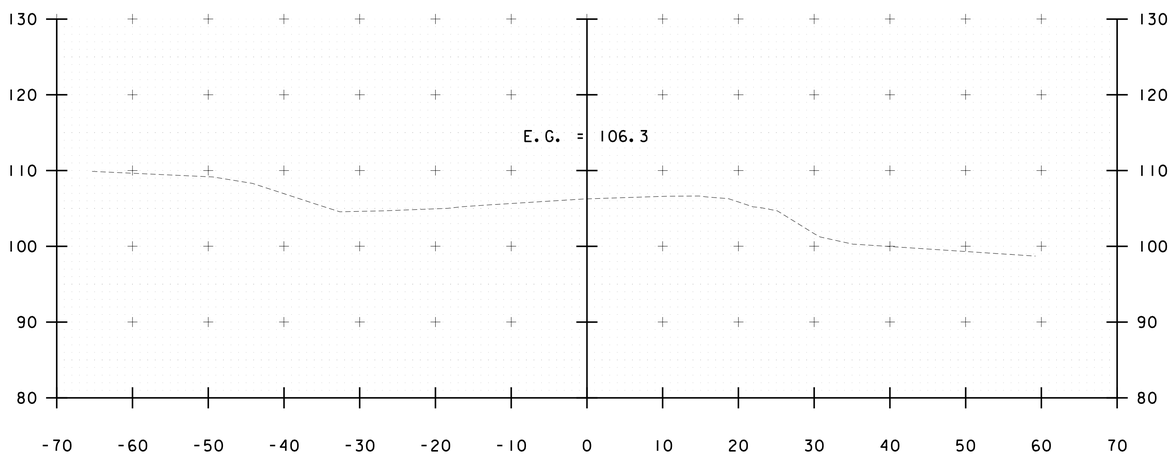

404+50

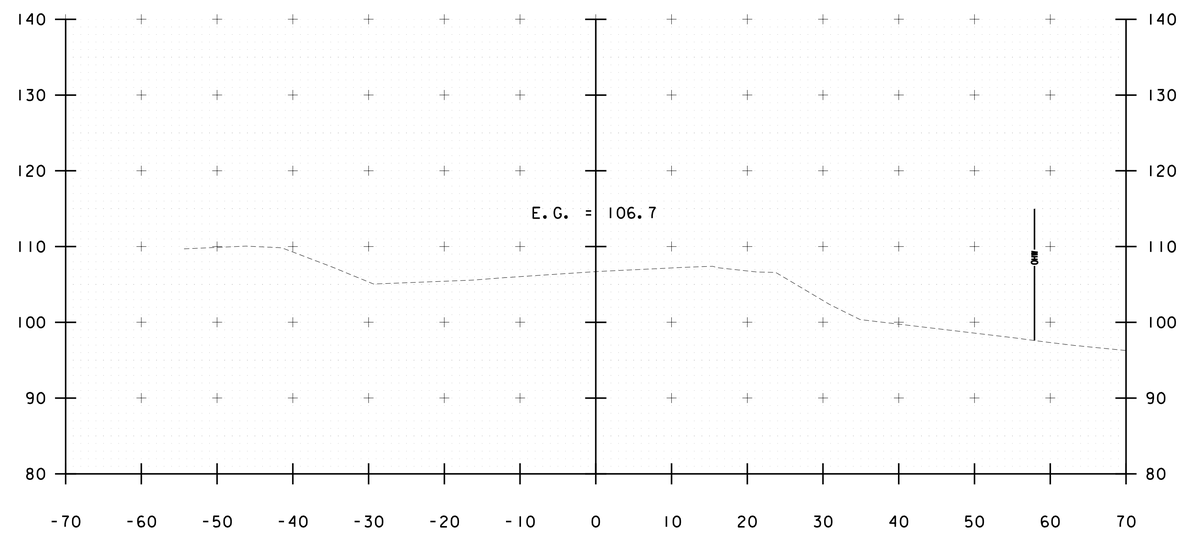

405+50

0 10 20
SCALE IN FEET

STA. 404+50 TO STA. 406+00

PROGRESS PLANS

PROJECT NAME: NORTH HERO GRAND ISLE BRIDGE
PROJECT NUMBER: BHF 028-1(26)

FILE NAME: z12b142xc.dgn
PROJECT LEADER: D. GOZALKOWSKI
DESIGNED BY: J. PARRELLI
CROSS SECTION SHEET 1

PLOT DATE: 4/29/2016
DRAWN BY: A. KIRBY
CHECKED BY: J. SHIELDS
SHEET 39 OF 196

FILE NAME = V:\Projects\ANY\K3\28173\CADD_MSTN\12b142\Consultants\z12b142xc.dgn
DATE/TIME = 4/29/2016
USER = 5237

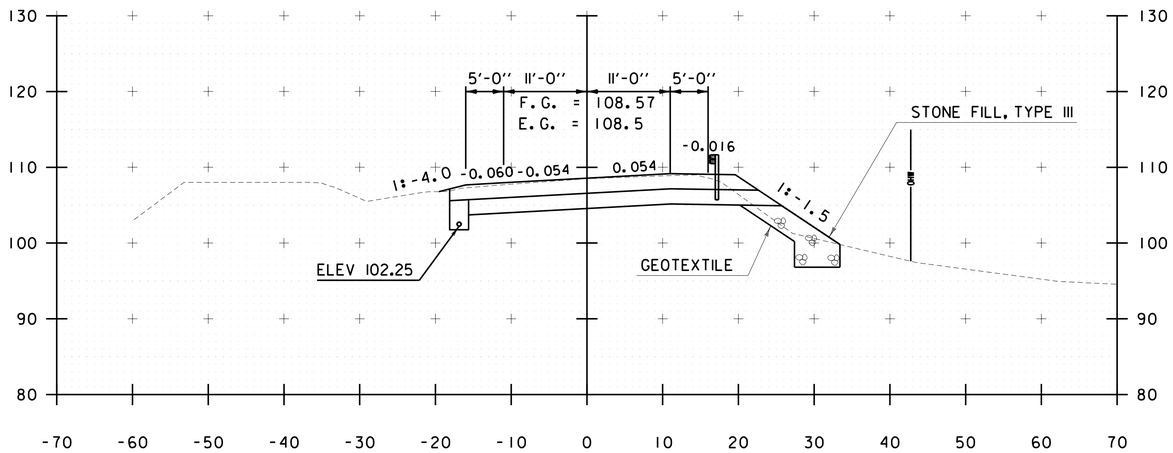

407+00

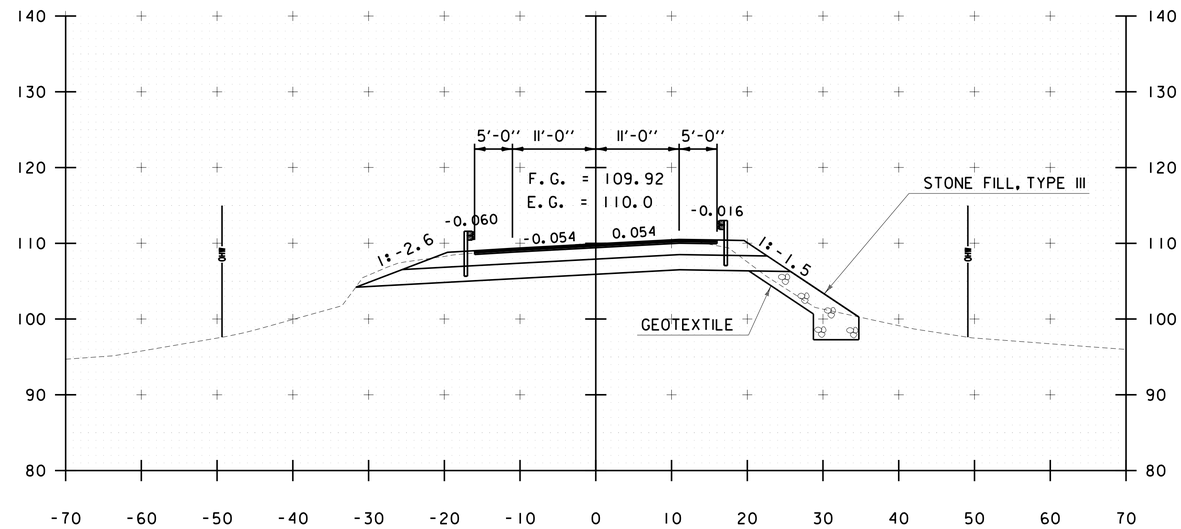

408+00

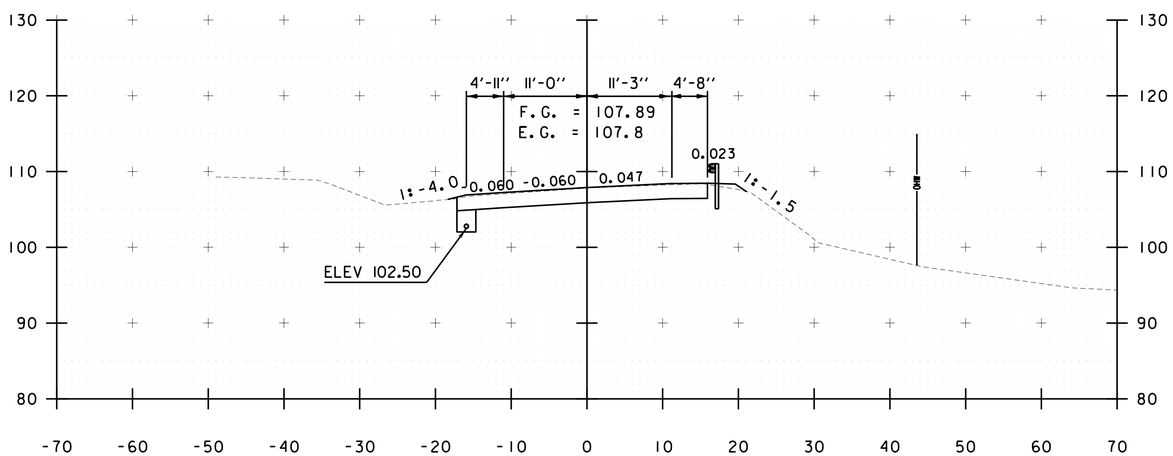

406+50

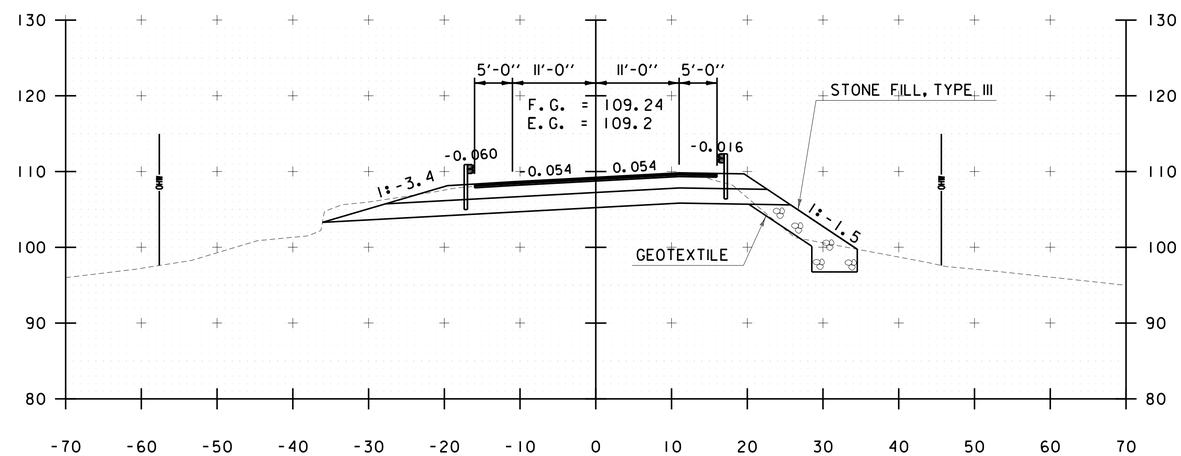

407+50

0 10 20
SCALE IN FEET

STA. 406+50 TO STA. 408+00

PROGRESS PLANS

PROJECT NAME: NORTH HERO GRAND ISLE BRIDGE
PROJECT NUMBER: BHF 028-1(26)

FILE NAME: z12b142xc.dgn
PROJECT LEADER: D. GOZALKOWSKI
DESIGNED BY: J. PARRELLI
CROSS SECTION SHEET 2

PLOT DATE: 4/29/2016
DRAWN BY: A. KIRBY
CHECKED BY: J. SHIELDS
SHEET 40 OF 196

FILE NAME = V:\Projects\ANY\K3\28173\CADD_MSTN\12b142\Consultants\z12b142xc.dgn
DATE/TIME = 4/29/2016
USER = 5237

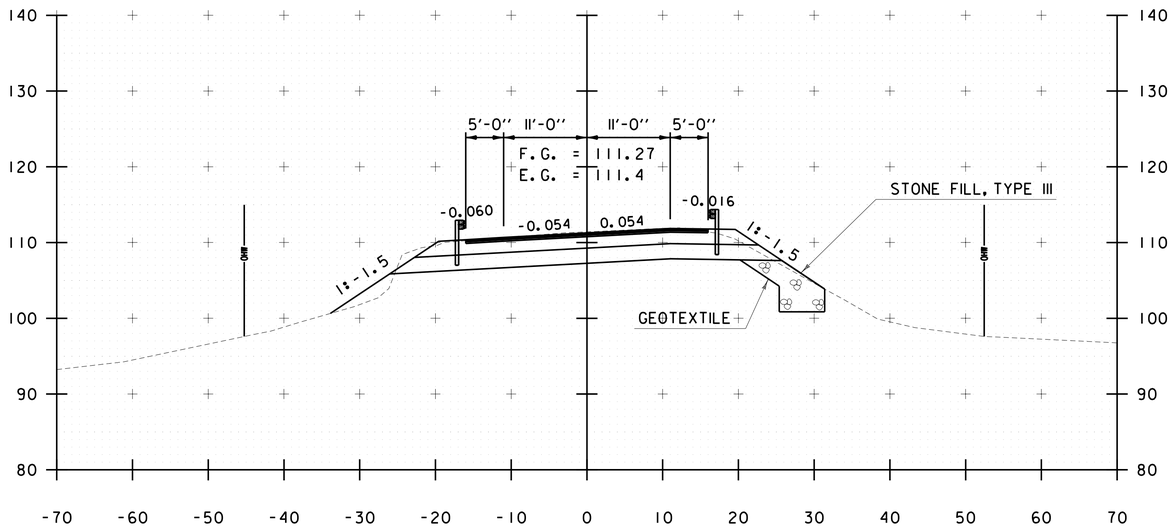

409+00

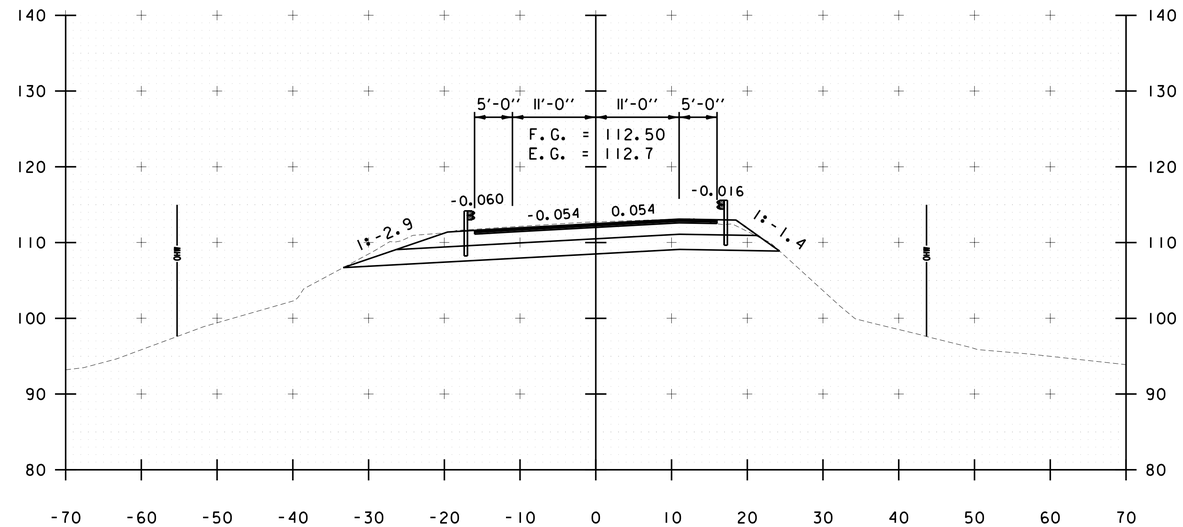

410+00

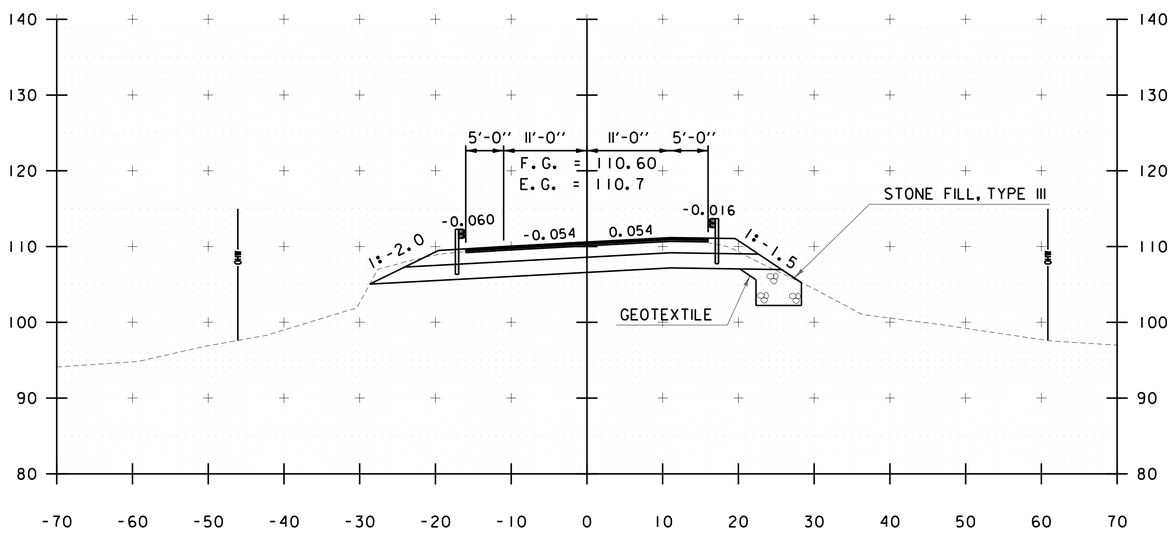

408+50

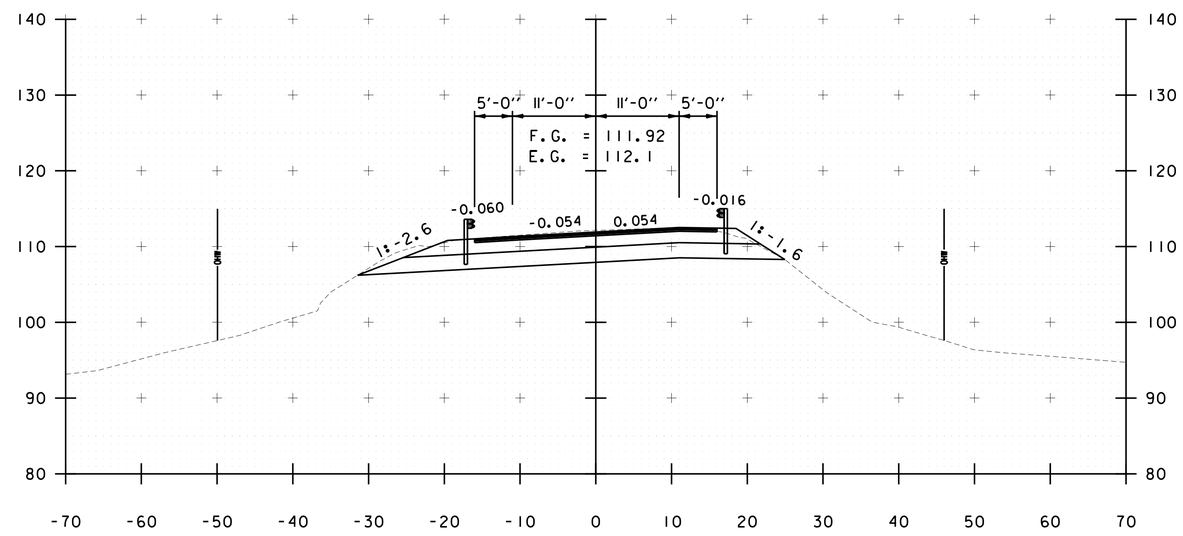

409+50

0 10 20
SCALE IN FEET

STA. 408+50 TO STA. 410+00

PROGRESS PLANS

PROJECT NAME: NORTH HERO GRAND ISLE BRIDGE
PROJECT NUMBER: BHF 028-1(26)

FILE NAME: z12b142xc.dgn	PLOT DATE: 4/29/2016
PROJECT LEADER: D. GOZALKOWSKI	DRAWN BY: A. KIRBY
DESIGNED BY: J. PARRELLI	CHECKED BY: J. SHIELDS
CROSS SECTION SHEET 3	SHEET 41 OF 196

FILE NAME = V:\Projects\ANY\K3\28173\CADD_MSTN\12b142\Consultants\z12b142xc.dgn
DATE/TIME = 4/29/2016
USER = 5237

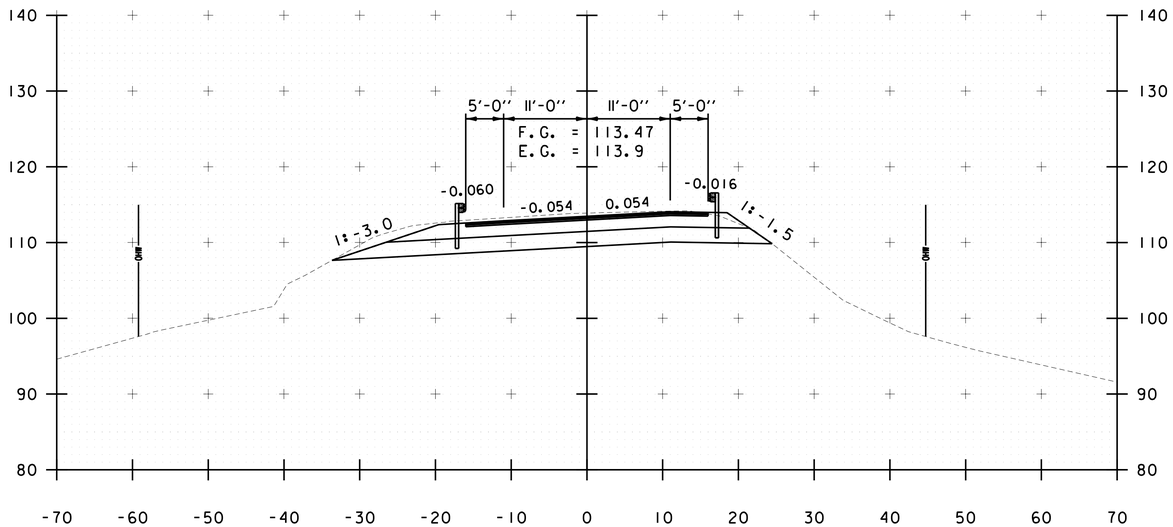

411+00

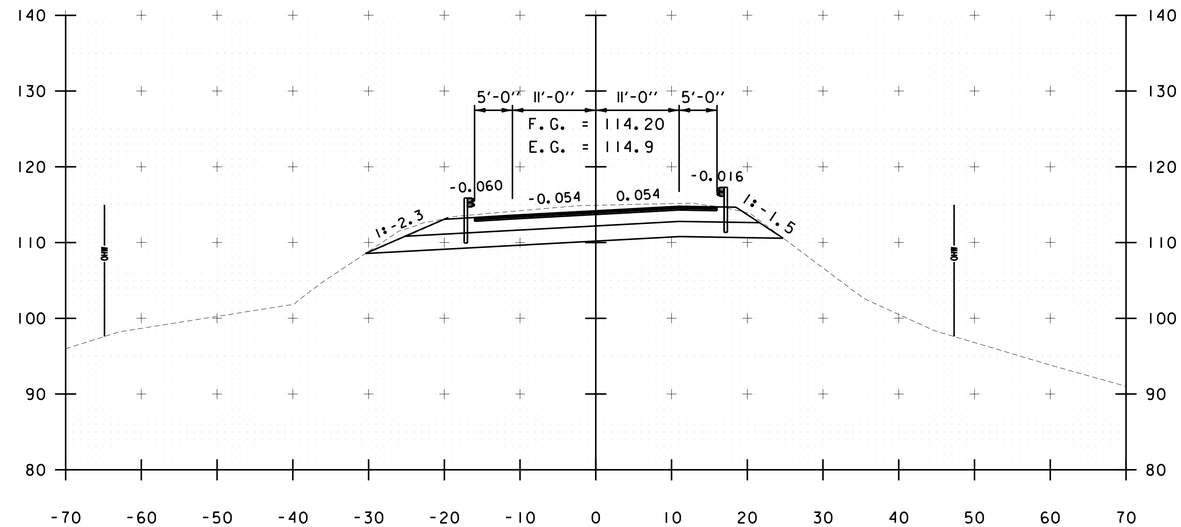

412+00

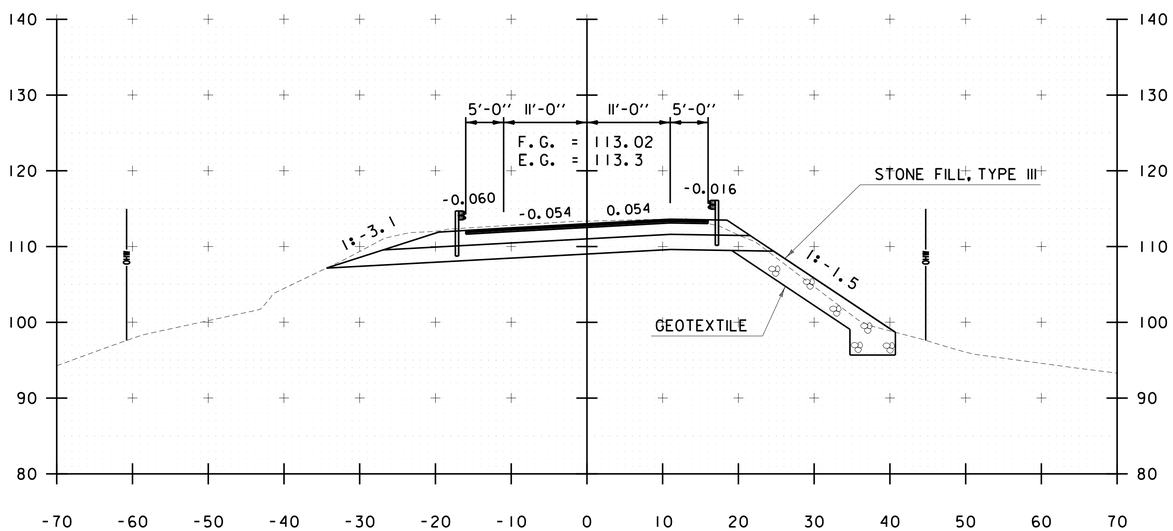

410+50

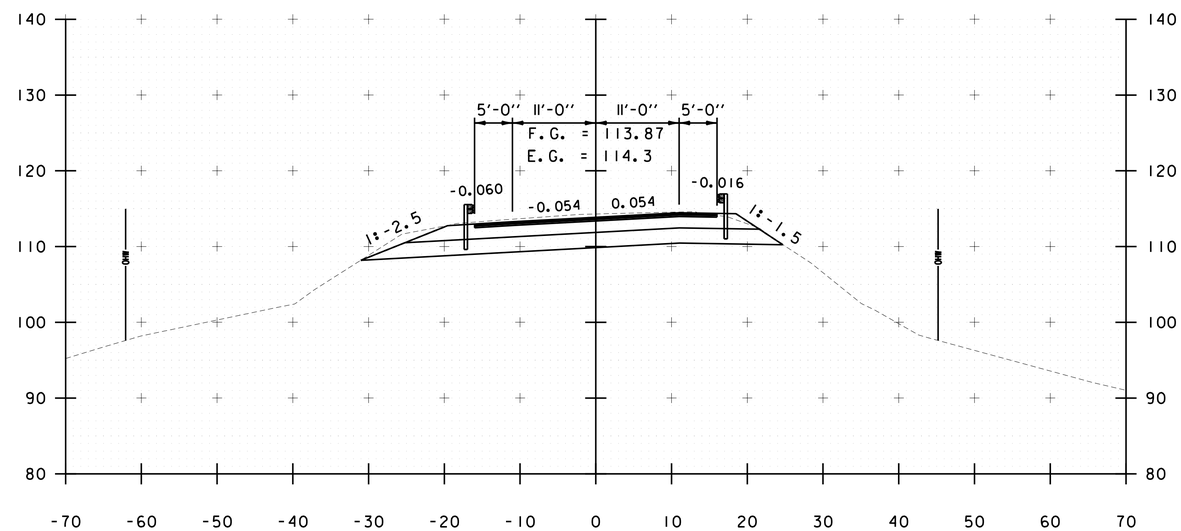

411+50

0 10 20
SCALE IN FEET

STA. 410+50 TO STA. 412+00

PROGRESS PLANS

PROJECT NAME: NORTH HERO GRAND ISLE BRIDGE
PROJECT NUMBER: BHF 028-1(26)

FILE NAME: z12b142xc.dgn
PROJECT LEADER: D. GOZALKOWSKI
DESIGNED BY: J. PARRELLI
CROSS SECTION SHEET 4

PLOT DATE: 4/29/2016
DRAWN BY: A. KIRBY
CHECKED BY: J. SHIELDS
SHEET 42 OF 196

FILE NAME = V:\Projects\ANY\K3\28173\CADD_MSTN\12b142\Consultants\z12b142xc.dgn
DATE/TIME = 4/29/2016
USER = 5237

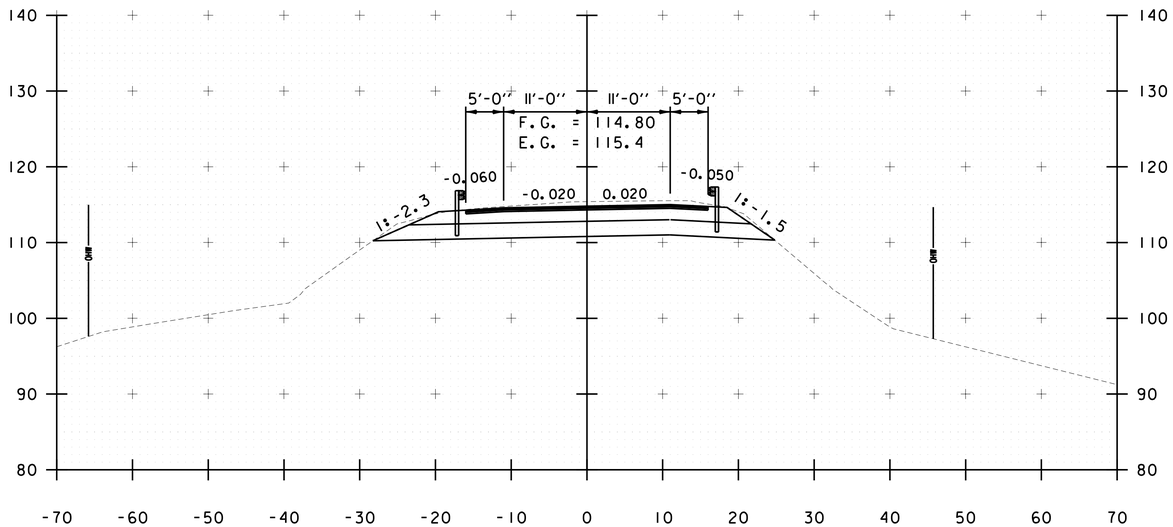

413+00

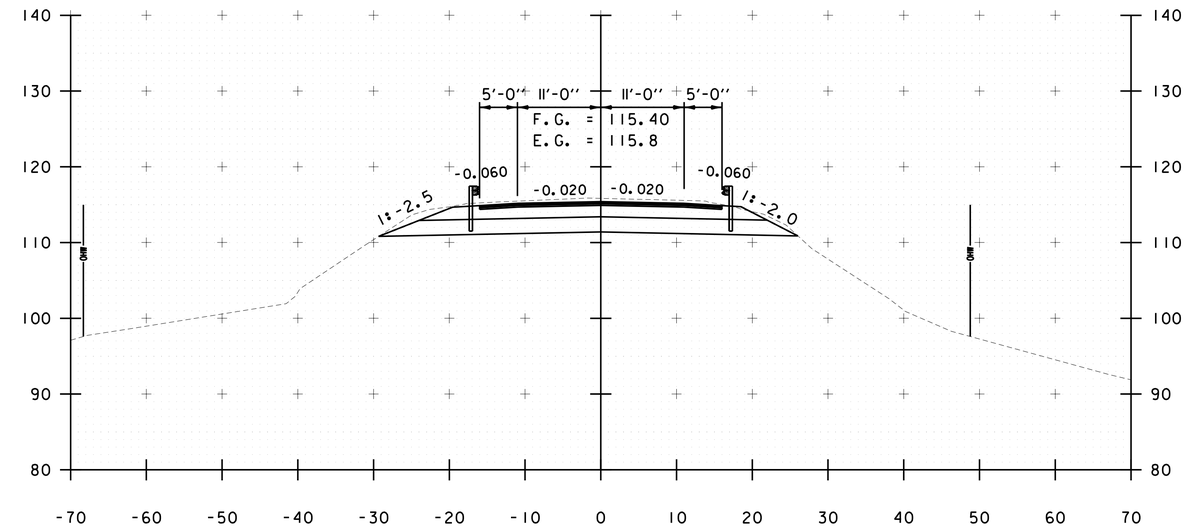

414+00

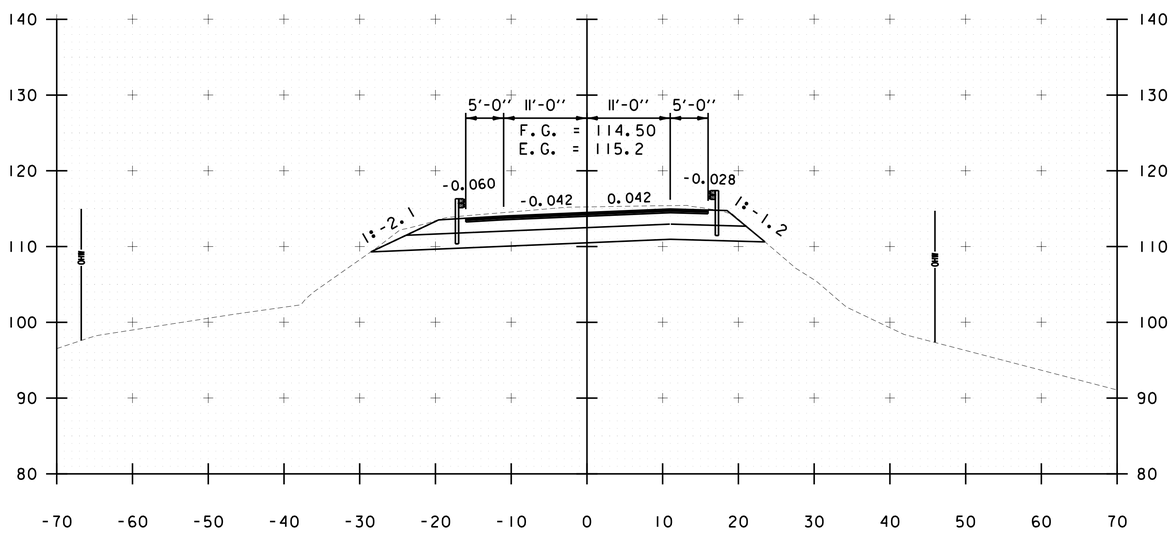

412+50

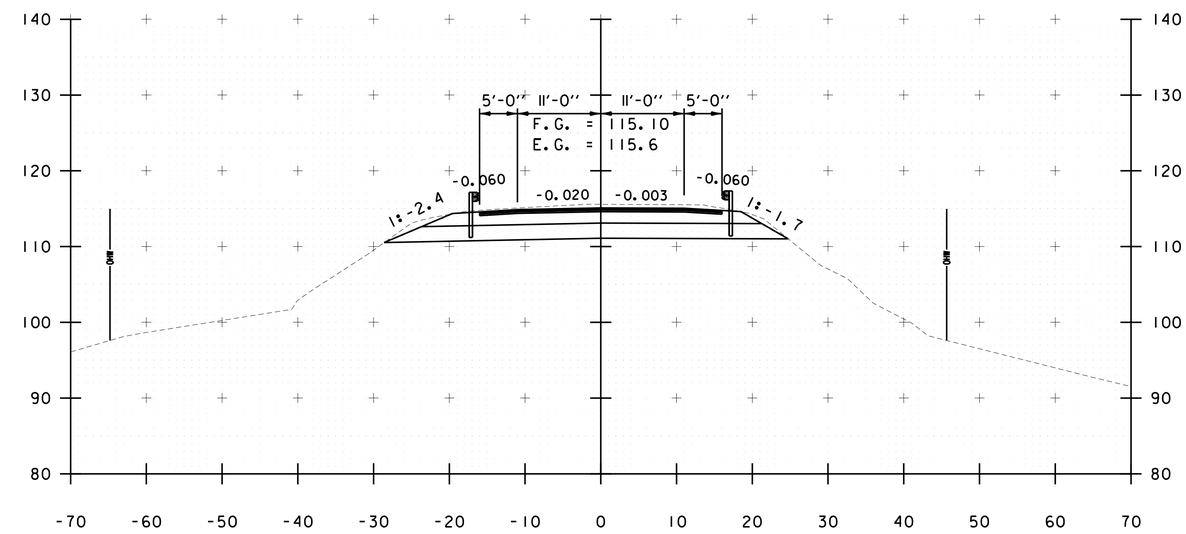

413+50

0 10 20
SCALE IN FEET

PROGRESS PLANS

PROJECT NAME: NORTH HERO GRAND ISLE BRIDGE
PROJECT NUMBER: BHF 028-1(26)

FILE NAME: z12b142xc.dgn
PROJECT LEADER: D. GOZALKOWSKI
DESIGNED BY: J. PARRELLI
CROSS SECTION SHEET 5

PLOT DATE: 4/29/2016
DRAWN BY: A. KIRBY
CHECKED BY: J. SHIELDS
SHEET 43 OF 196

STA. 412+50 TO STA. 414+00

CHA

FILE NAME = V:\Projects\ANY\K3\28173\CADD_MSTN\12b142\Consultants\z12b142xc.dgn
DATE/TIME = 4/29/2016
USER = 5237

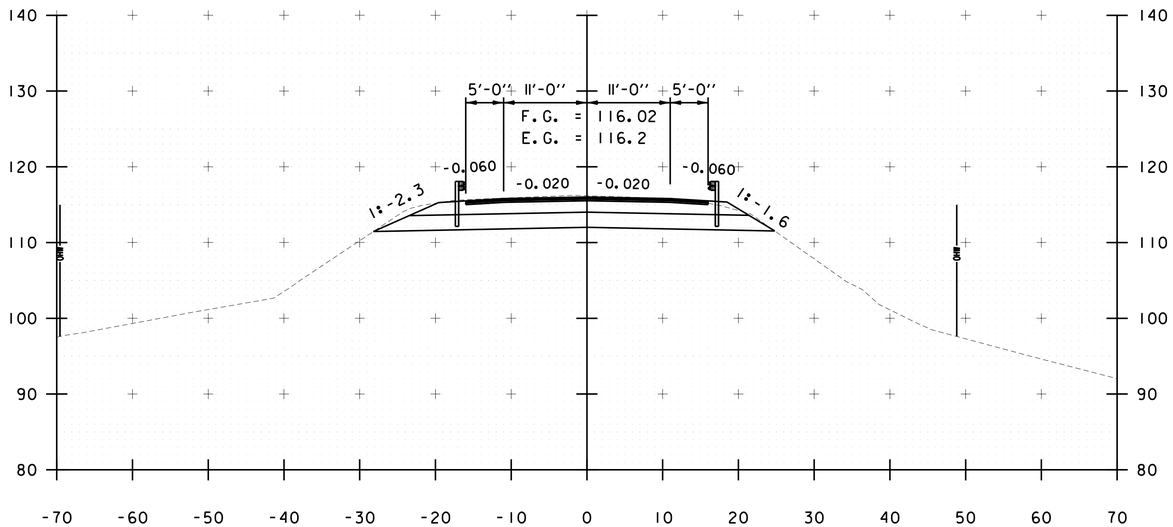

415+00

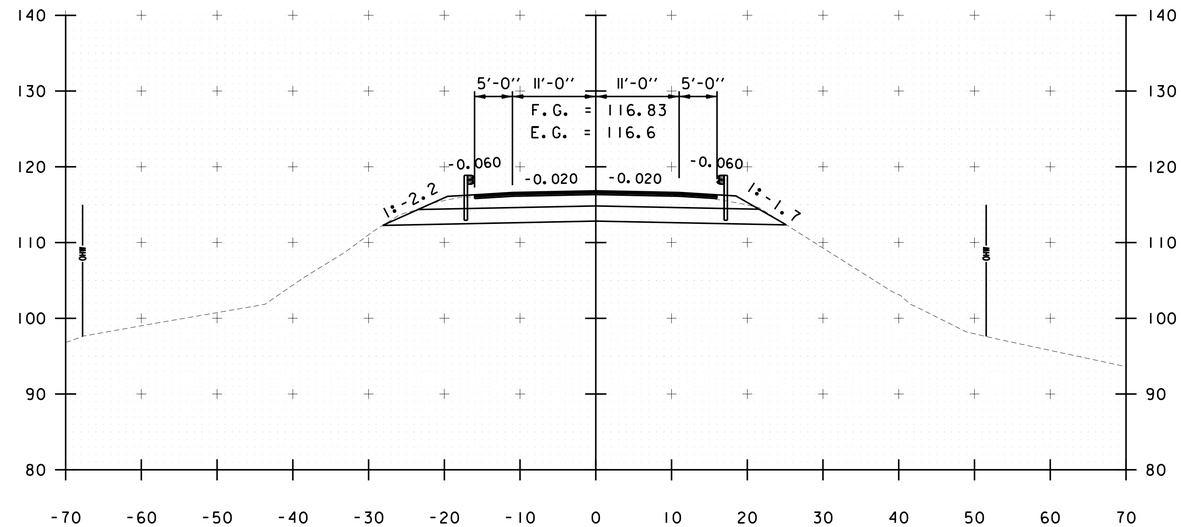

416+00

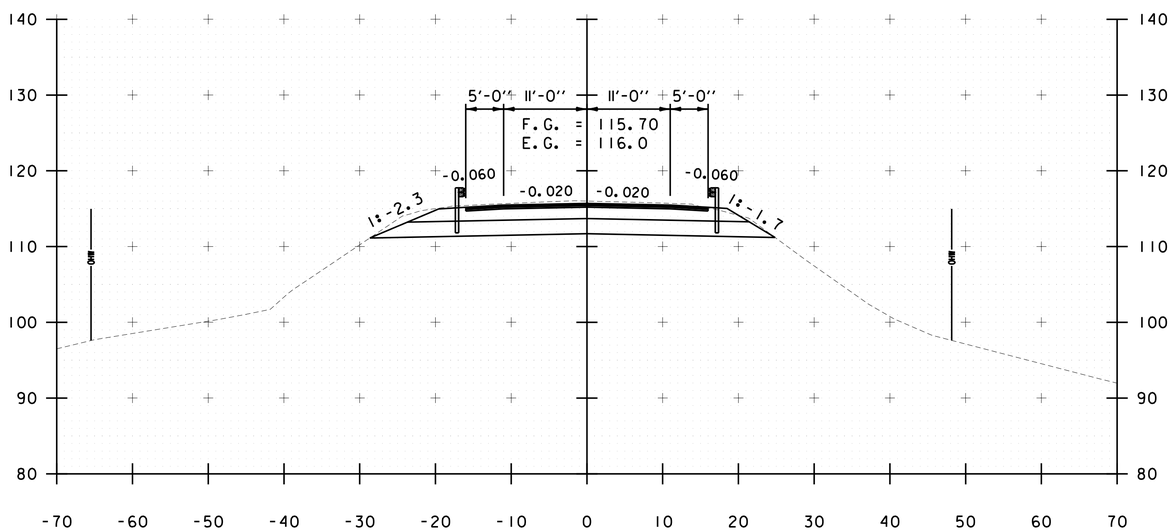

414+50

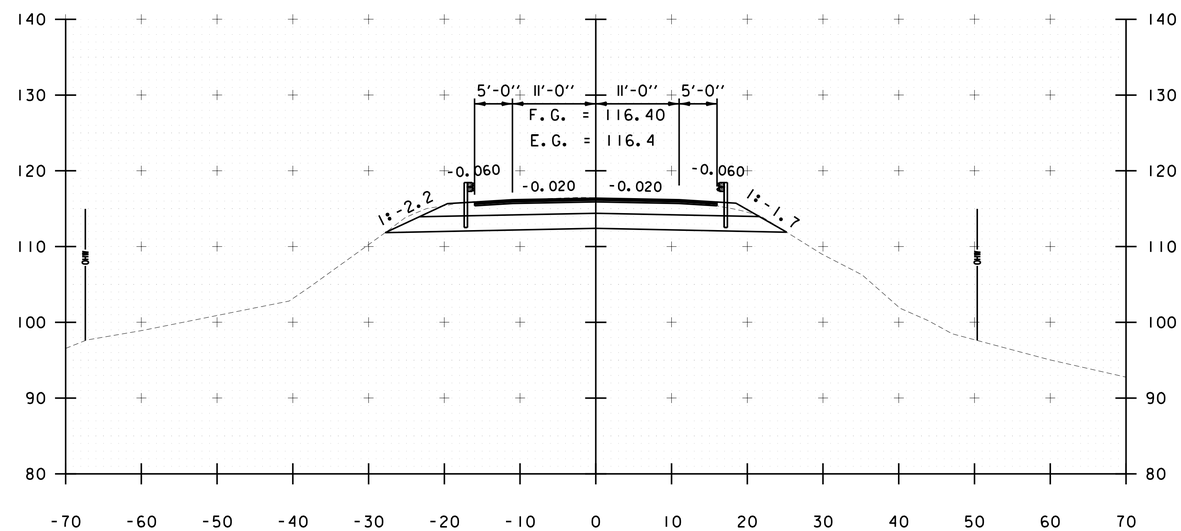

415+50

0 10 20
SCALE IN FEET

STA. 414+50 TO STA. 416+00

PROGRESS PLANS

PROJECT NAME: NORTH HERO GRAND ISLE BRIDGE
PROJECT NUMBER: BHF 028-1(26)

FILE NAME: z12b142xc.dgn
PROJECT LEADER: D. GOZALKOWSKI
DESIGNED BY: J. PARRELLI
CROSS SECTION SHEET 6

PLOT DATE: 4/29/2016
DRAWN BY: A. KIRBY
CHECKED BY: J. SHIELDS
SHEET 44 OF 196

FILE NAME = V:\Projects\ANY\K3\28173\CADD_MSTN\12b142\Consultants\z12b142xc.dgn
DATE/TIME = 4/29/2016
USER = 5237

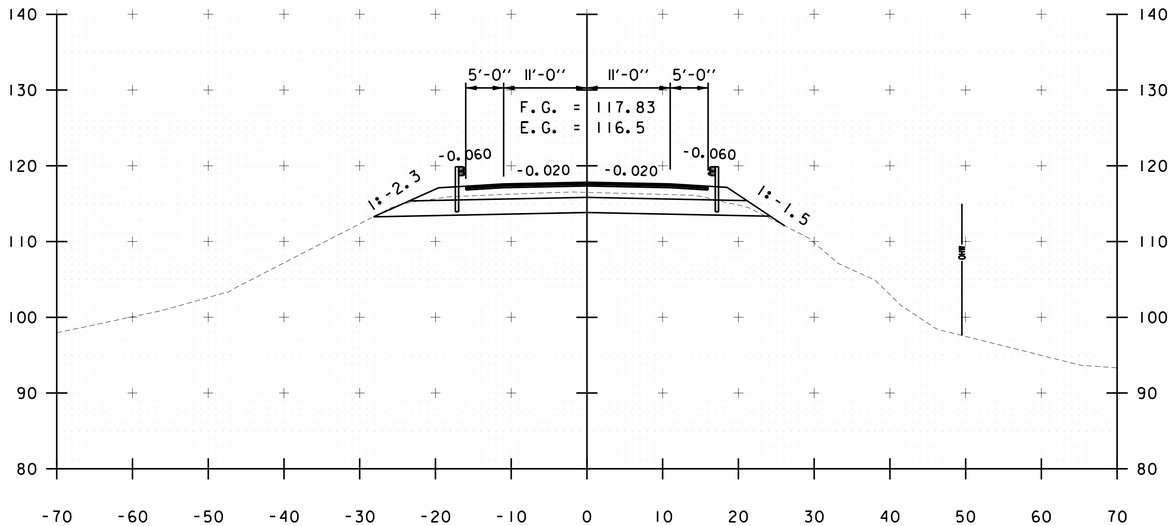

417+00

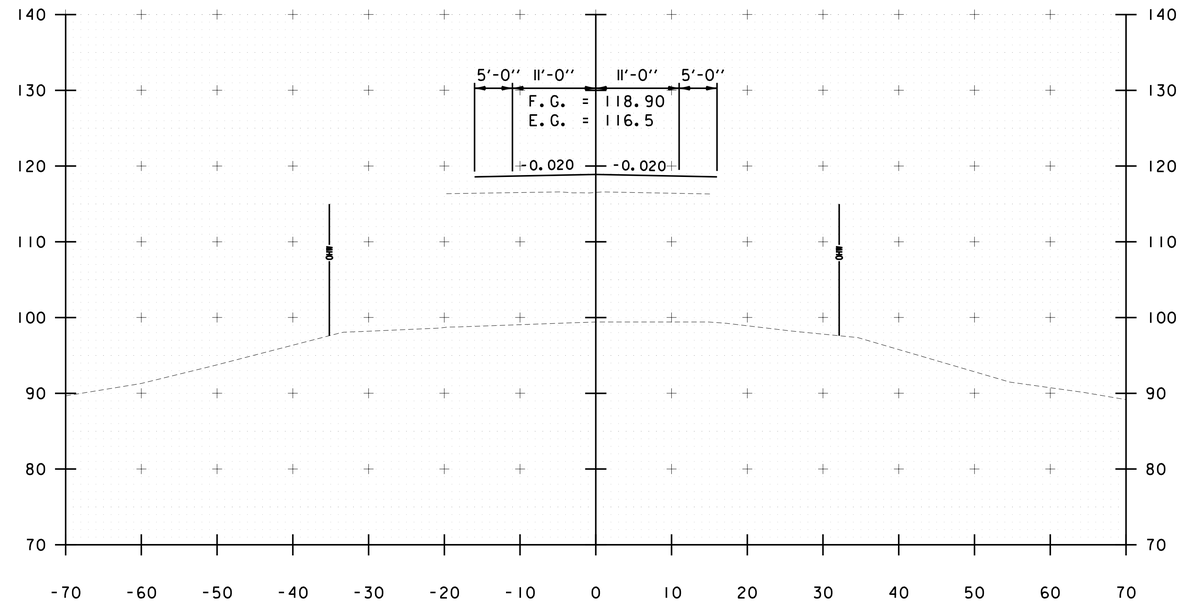

418+00

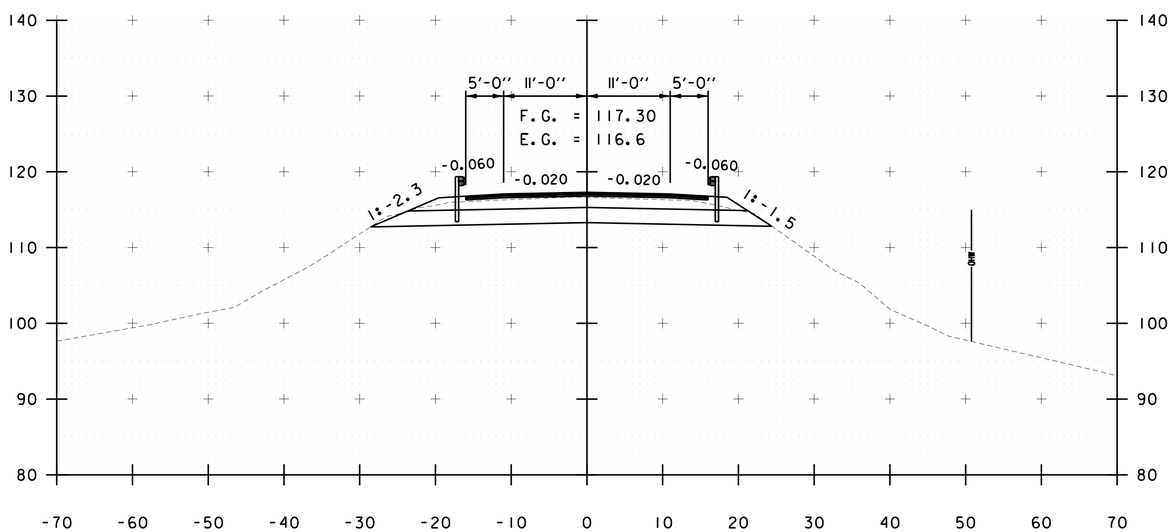

416+50

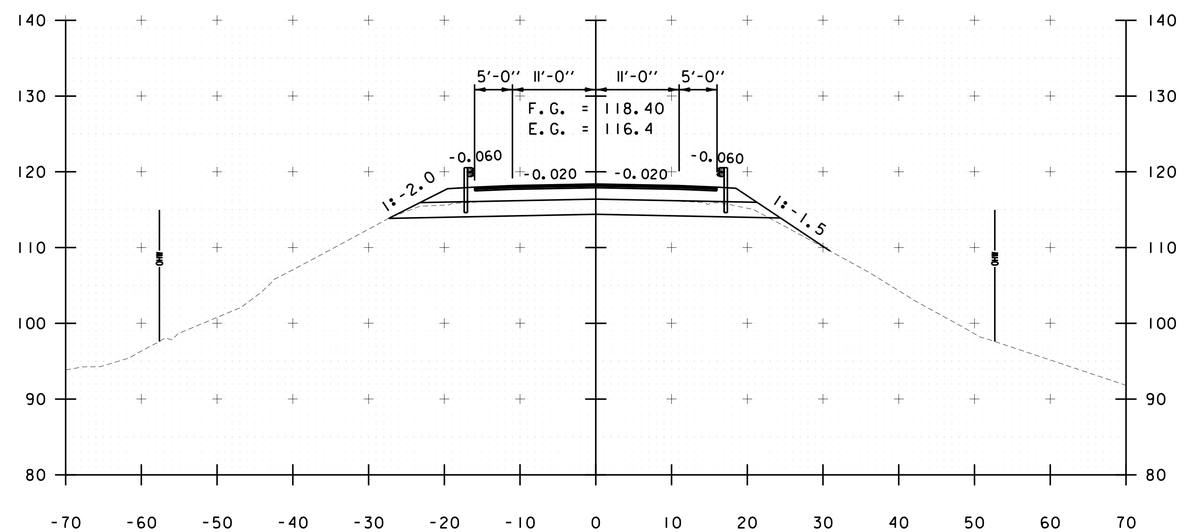

417+50

0 10 20
SCALE IN FEET

PROGRESS PLANS

PROJECT NAME: NORTH HERO GRAND ISLE BRIDGE
PROJECT NUMBER: BHF 028-1(26)

FILE NAME: z12b142xc.dgn
PROJECT LEADER: D. GOZALKOWSKI
DESIGNED BY: J. PARRELLI
CROSS SECTION SHEET 7

PLOT DATE: 4/29/2016
DRAWN BY: A. KIRBY
CHECKED BY: J. SHIELDS
SHEET 45 OF 196

STA. 416+50 TO STA. 418+00

CHA

FILE NAME = V:\Projects\ANY\K3\28173\CADD_MSTN\12b142\Consultants\z12b142xc.dgn
DATE/TIME = 4/29/2016
USER = 5237

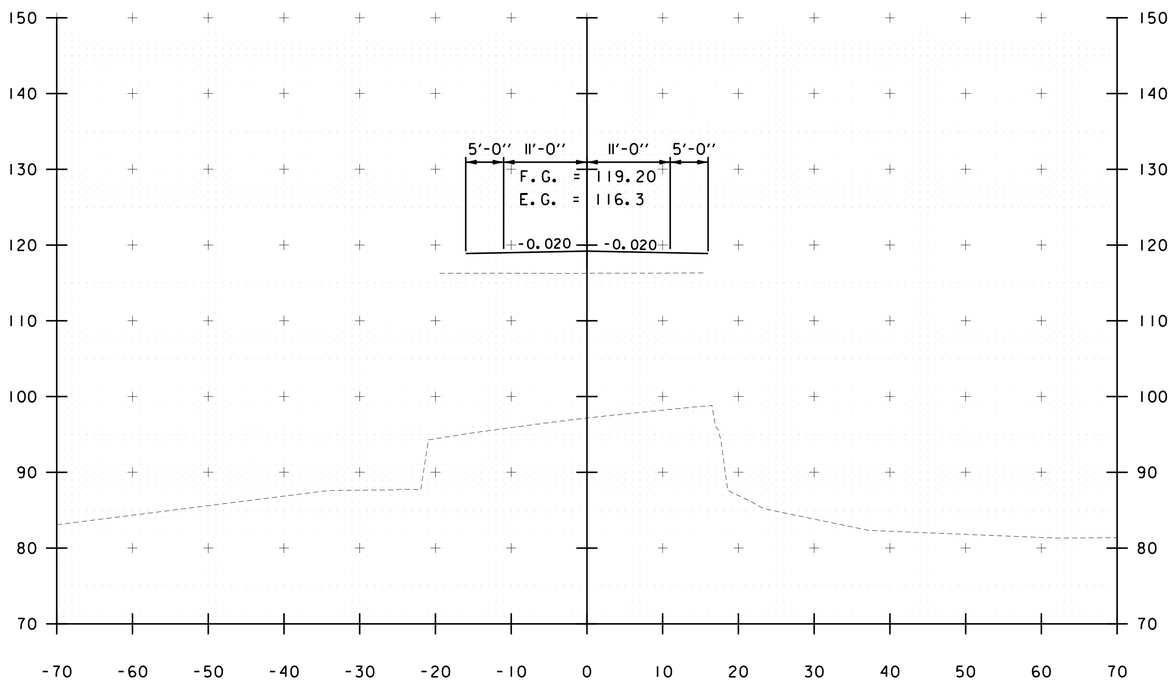

418+50

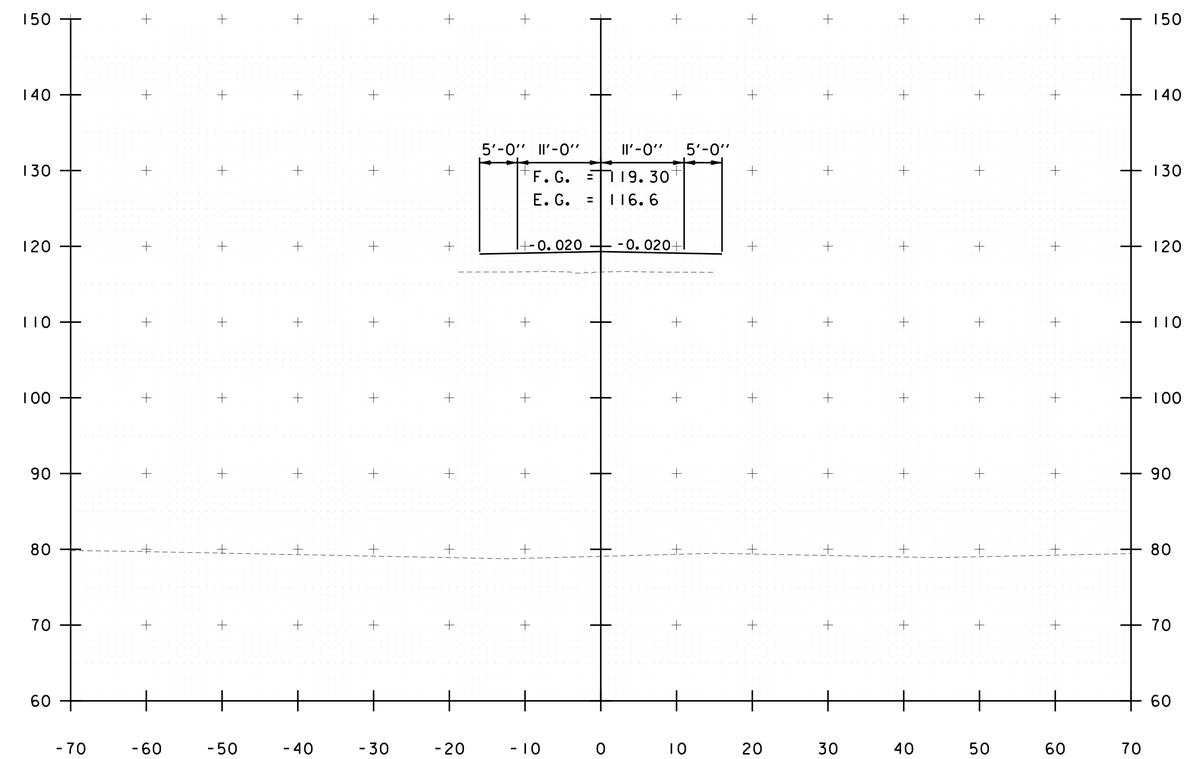

419+00

0 10 20
SCALE IN FEET

STA. 418+50 TO STA. 419+00

PROGRESS PLANS

PROJECT NAME: NORTH HERO GRAND ISLE BRIDGE
PROJECT NUMBER: BHF 028-1(26)

FILE NAME: zl2bl42xc.dgn
PROJECT LEADER: D. GOZALKOWSKI
DESIGNED BY: J. PARRELLI
CROSS SECTION SHEET 8

PLOT DATE: 4/29/2016
DRAWN BY: A. KIRBY
CHECKED BY: J. SHIELDS
SHEET 46 OF 196

FILE NAME = V:\Projects\ANY\K3\28173\CADD_MSTN\12bl42\Consultants\zl2bl42xc.dgn
DATE/TIME = 4/29/2016
USER = 5237

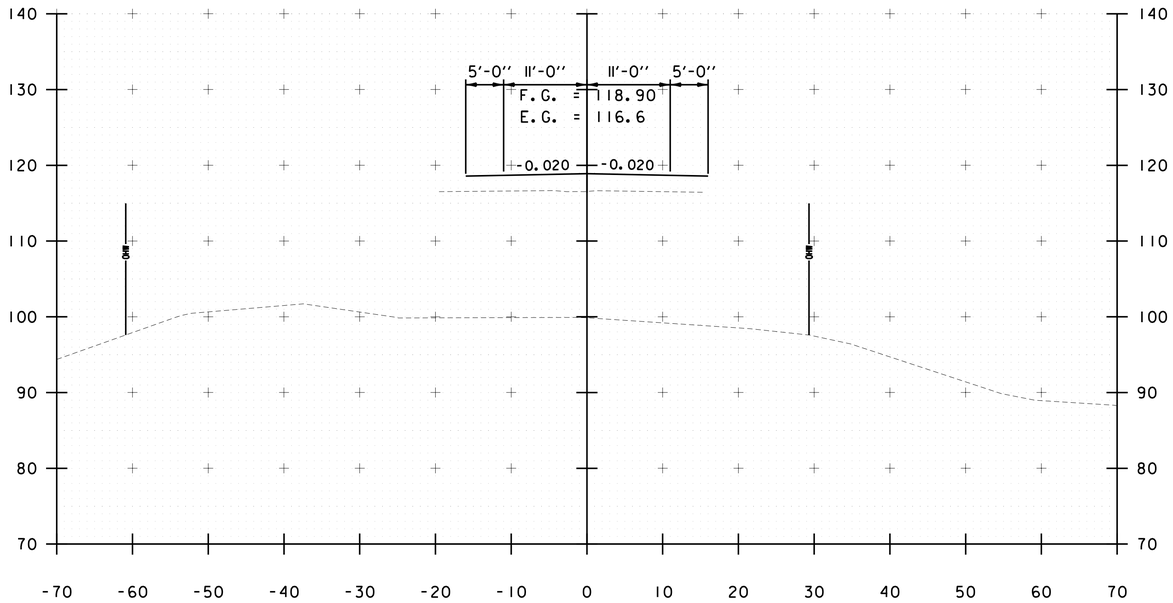

420+00

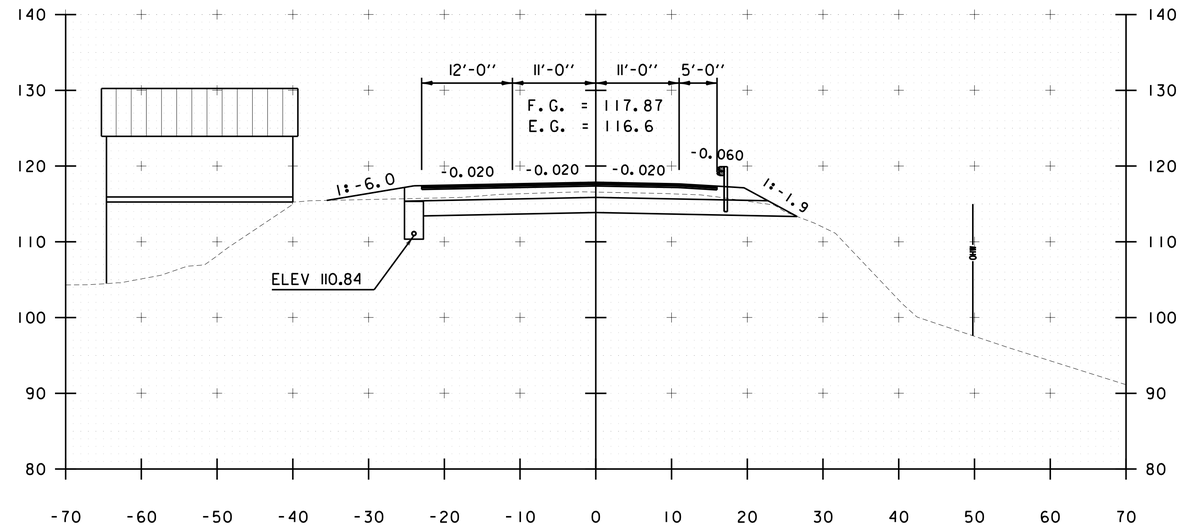

421+00

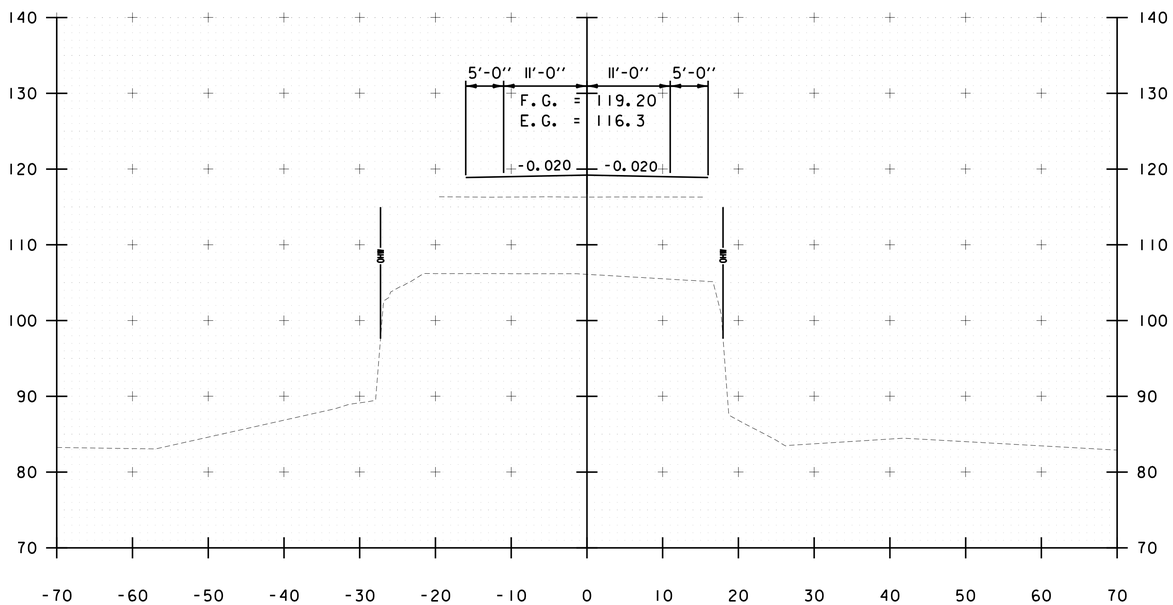

419+50

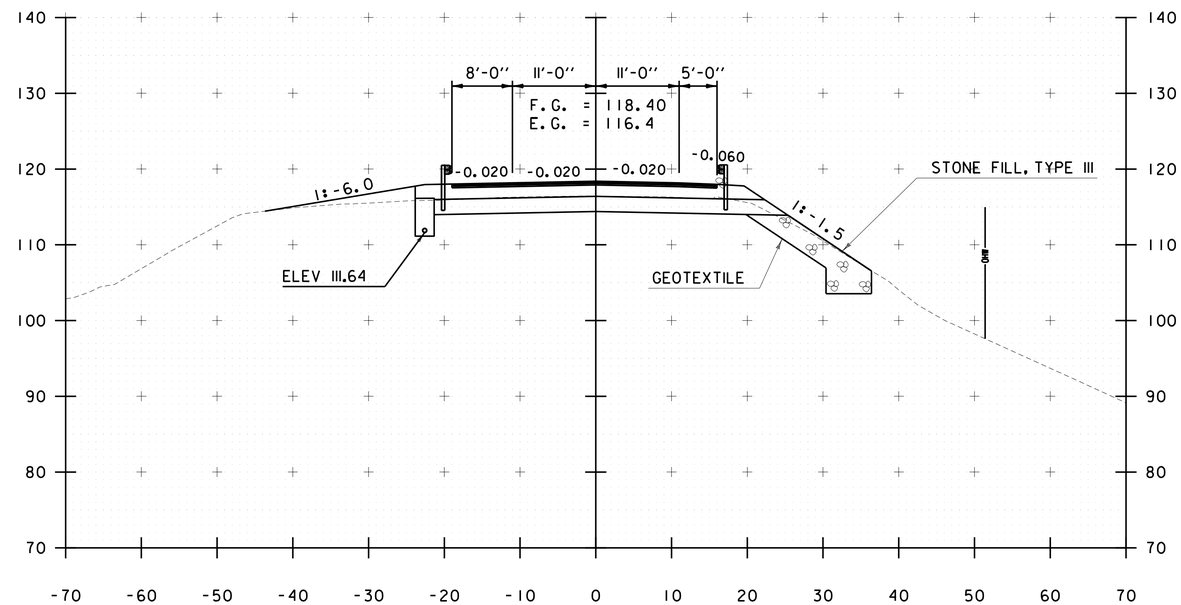

420+50

0 10 20
SCALE IN FEET

STA. 419+50 TO STA. 421+00

PROGRESS PLANS

PROJECT NAME: NORTH HERO GRAND ISLE BRIDGE
PROJECT NUMBER: BHF 028-1(26)

FILE NAME: zl2bl42xc.dgn
PROJECT LEADER: D. GOZALKOWSKI
DESIGNED BY: J. PARRELLI
CROSS SECTION SHEET 9

PLOT DATE: 4/29/2016
DRAWN BY: A. KIRBY
CHECKED BY: J. SHIELDS
SHEET 47 OF 196

CHA

FILE NAME = V:\Projects\ANY\K3\28173\CADD_MSTN\12bl42\Consultants\zl2bl42xc.dgn
DATE/TIME = 4/29/2016
USER = 5237

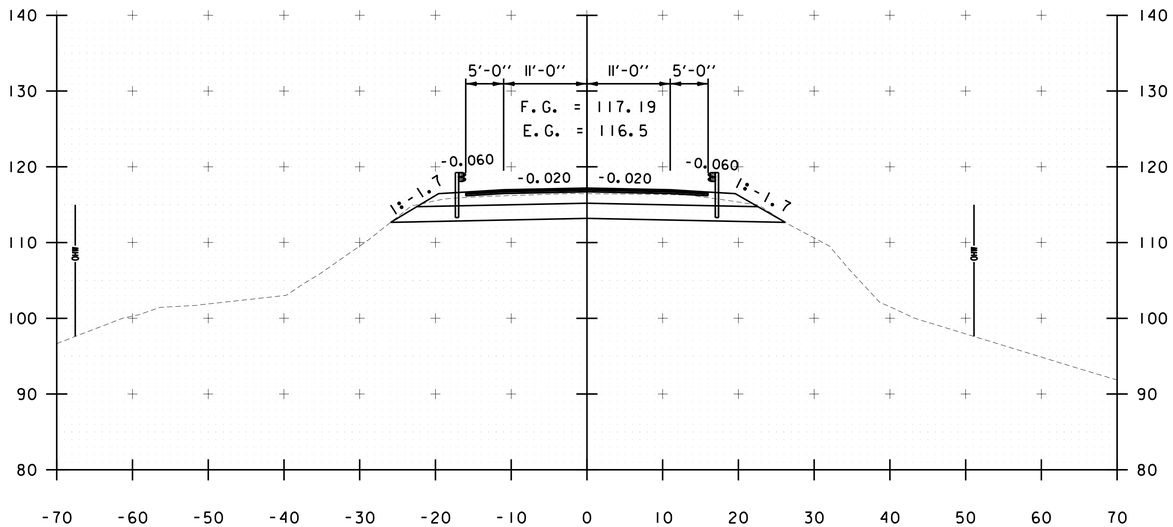

422+00

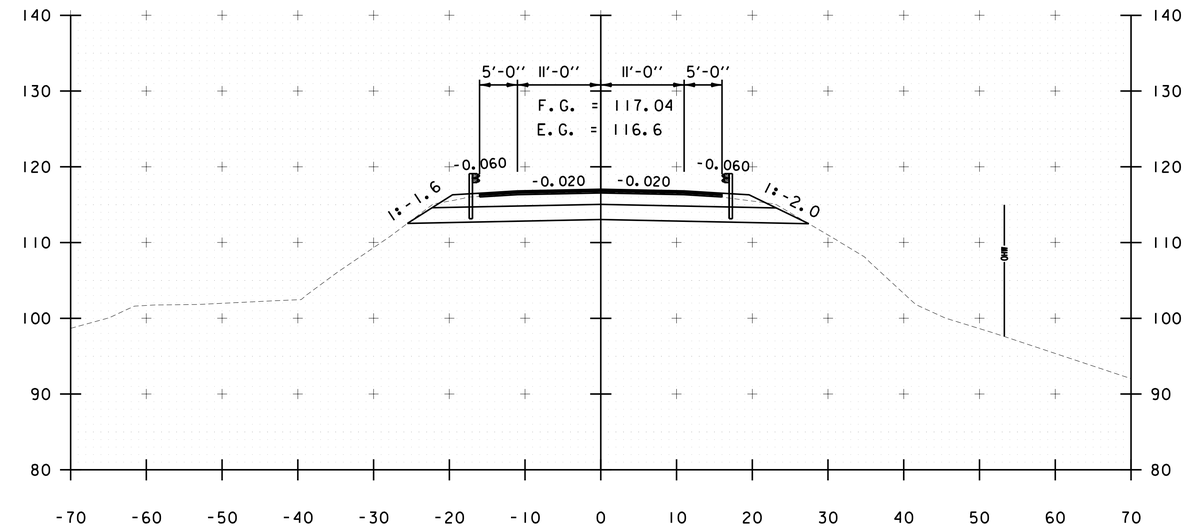

423+00

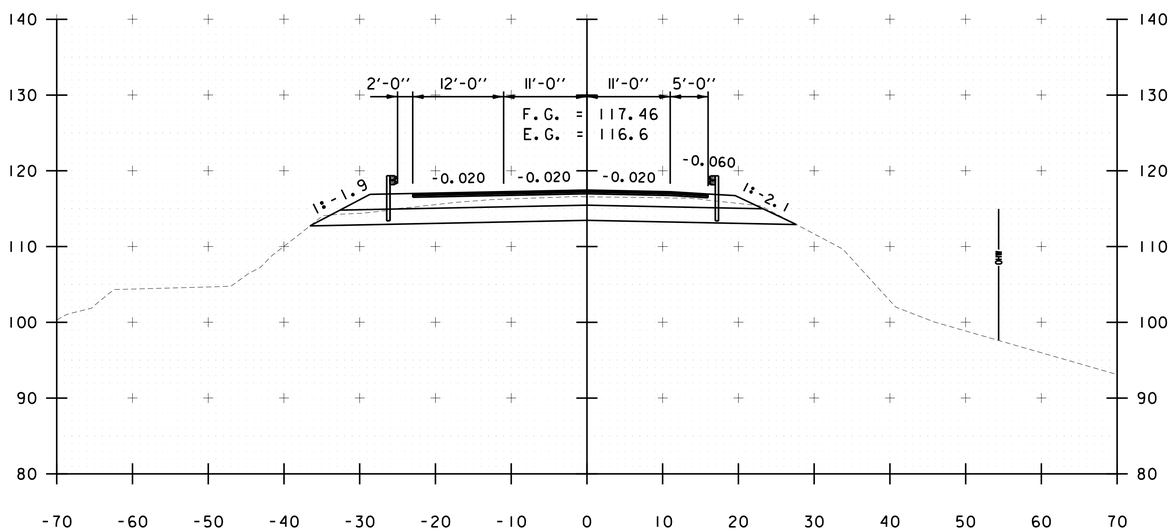

421+50

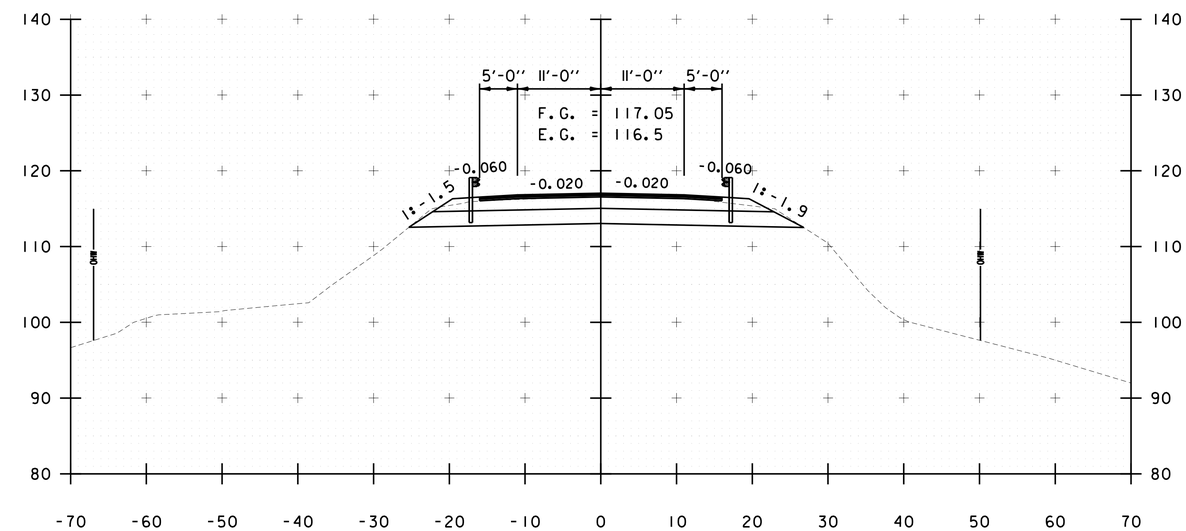

422+50

0 10 20
SCALE IN FEET

STA. 421+50 TO STA. 423+00

PROGRESS PLANS

PROJECT NAME: NORTH HERO GRAND ISLE BRIDGE
PROJECT NUMBER: BHF 028-1(26)

FILE NAME: z12b142xc.dgn
PROJECT LEADER: D. GOZALKOWSKI
DESIGNED BY: J. PARRELLI
CROSS SECTION SHEET 10

PLOT DATE: 4/29/2016
DRAWN BY: A. KIRBY
CHECKED BY: J. SHIELDS
SHEET 48 OF 196

FILE NAME = V:\Projects\ANY\K3\28173\CADD_MSTN\12b142\Consultants\z12b142xc.dgn
DATE/TIME = 4/29/2016
USER = 5237

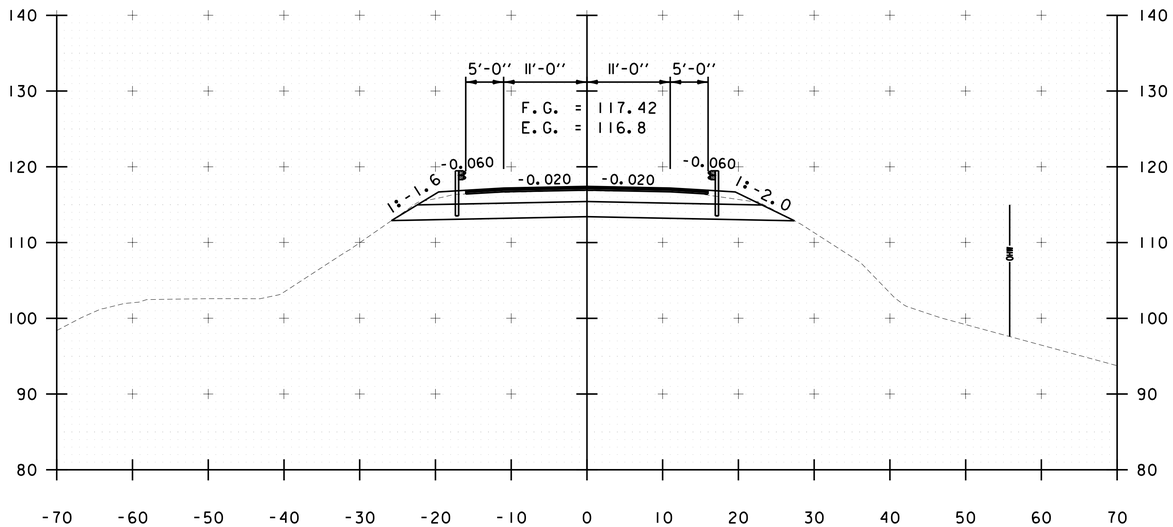

424+00

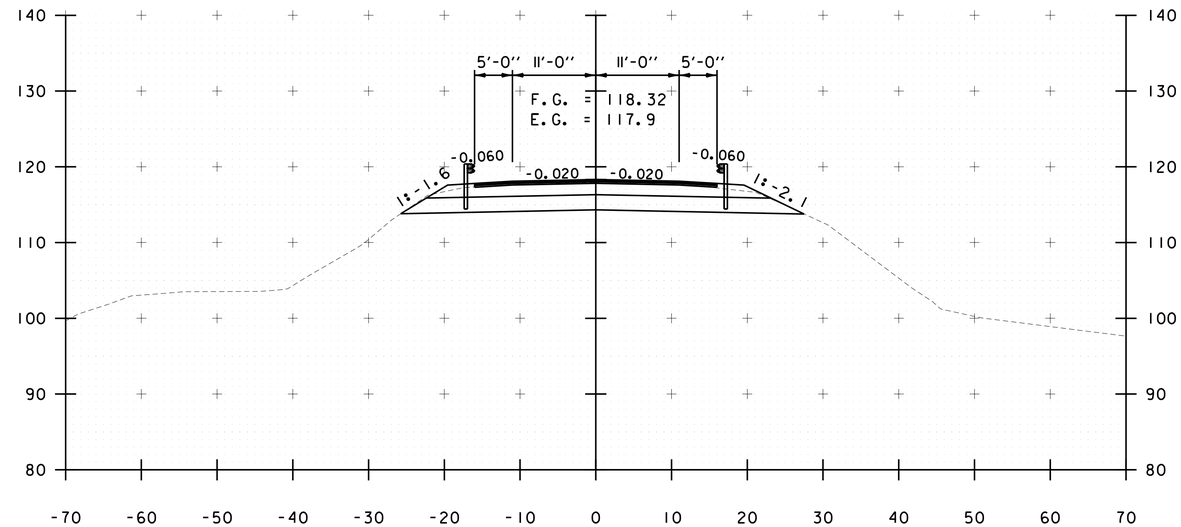

425+00

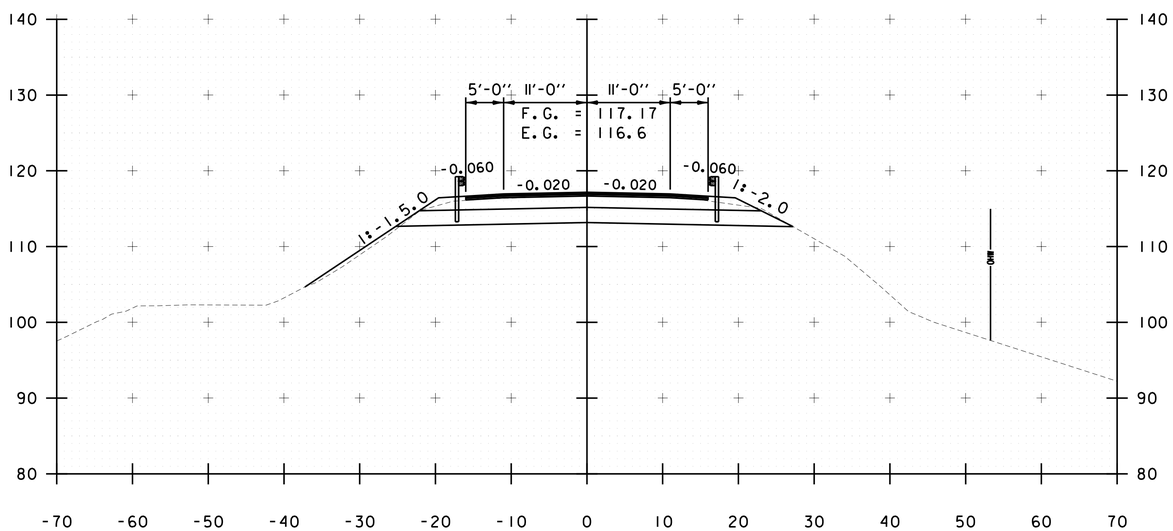

423+50

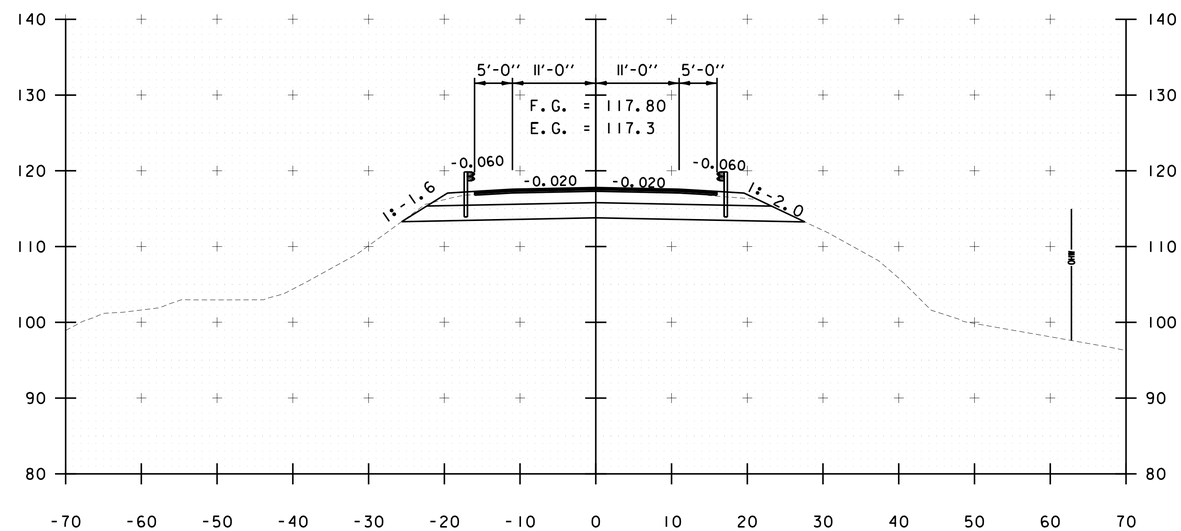

424+50

0 10 20
SCALE IN FEET

PROGRESS PLANS

STA. 423+50 TO STA. 425+00

CHA

PROJECT NAME: NORTH HERO GRAND ISLE BRIDGE	
PROJECT NUMBER: BHF 028-1(26)	
FILE NAME: z12b142xc.dgn	PLOT DATE: 4/29/2016
PROJECT LEADER: D. GOZALKOWSKI	DRAWN BY: A. KIRBY
DESIGNED BY: J. PARRELLI	CHECKED BY: J. SHIELDS
CROSS SECTION SHEET II	SHEET 49 OF 196

FILE NAME = V:\Projects\ANY\K3\28173\CADD_MSTN\12b142\Consultants\z12b142xc.dgn
DATE/TIME = 4/29/2016
USER = 5237

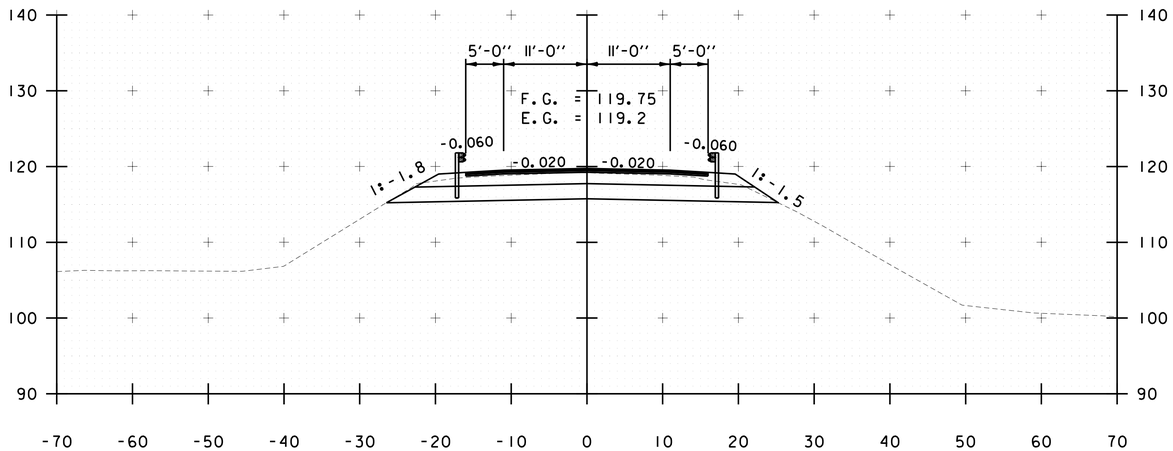

426+00

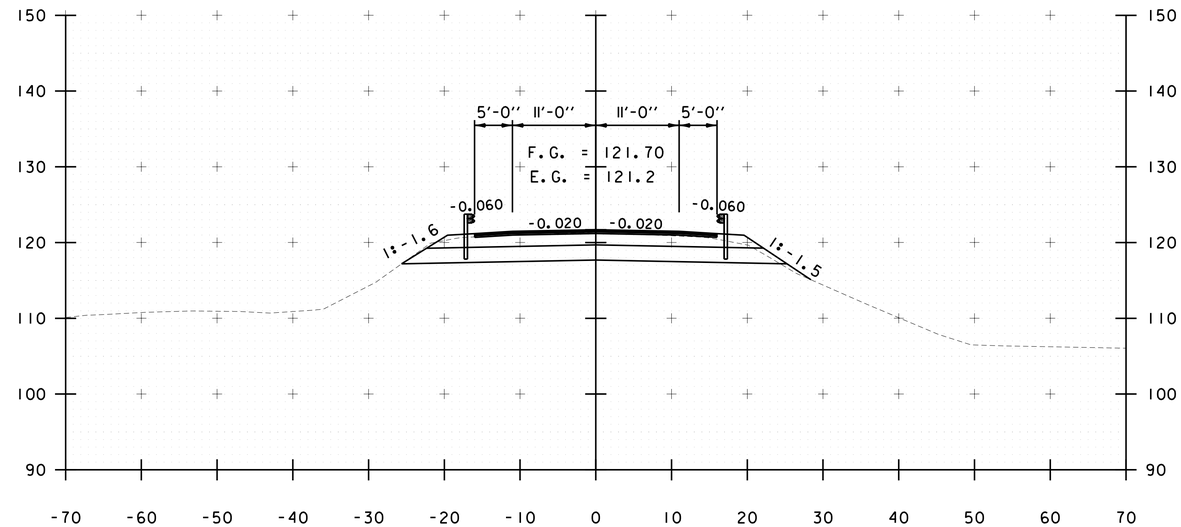

427+00

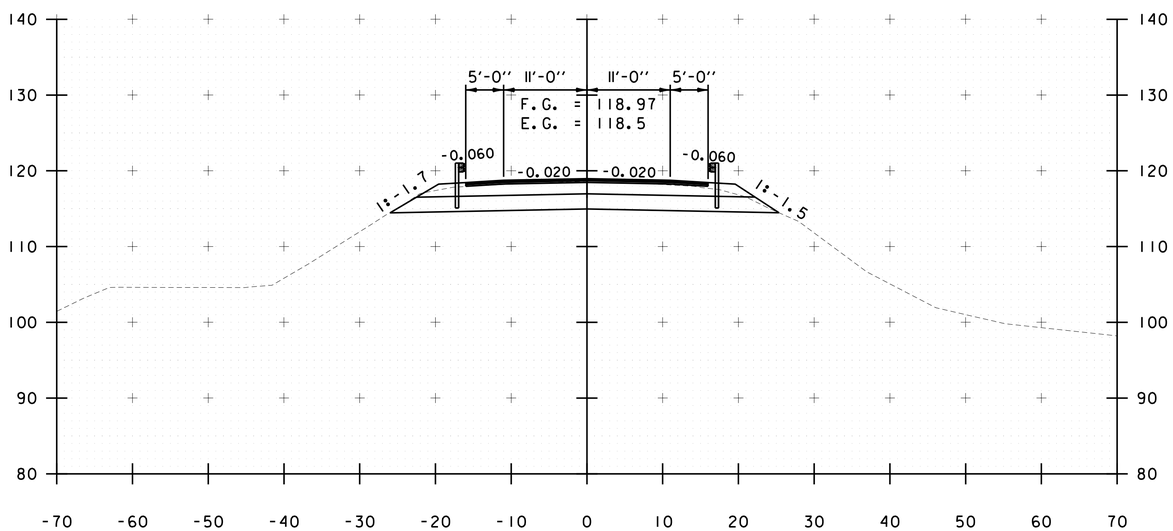

425+50

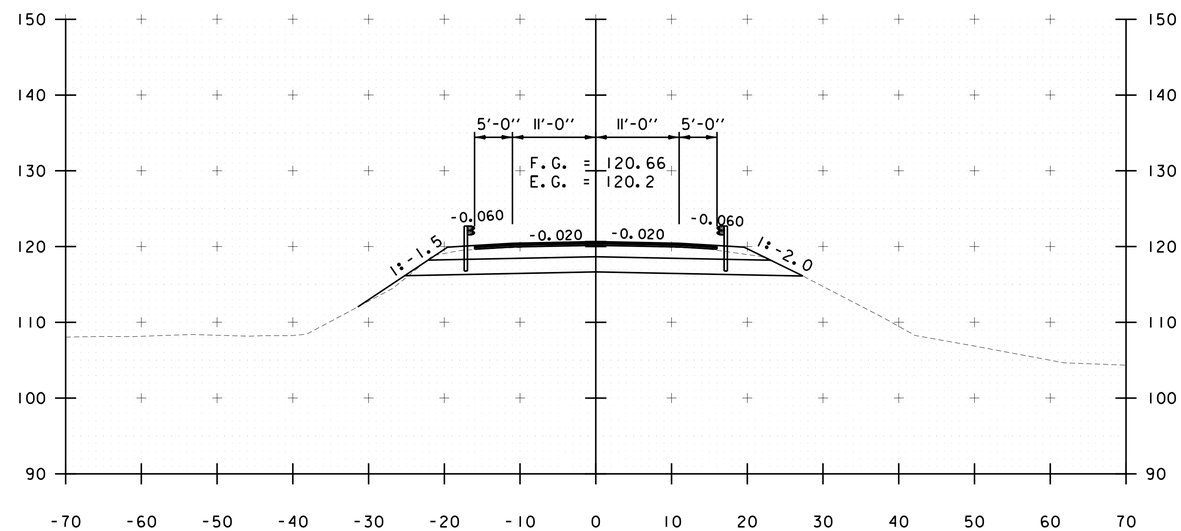

426+50

0 10 20
SCALE IN FEET

STA. 425+50 TO STA. 427+00

PROGRESS PLANS

PROJECT NAME: NORTH HERO GRAND ISLE BRIDGE
PROJECT NUMBER: BHF 028-1(26)

FILE NAME: z12b142xc.dgn
PROJECT LEADER: D. GOZALKOWSKI
DESIGNED BY: J. PARRELLI
CROSS SECTION SHEET 12

PLOT DATE: 4/29/2016
DRAWN BY: A. KIRBY
CHECKED BY: J. SHIELDS
SHEET 50 OF 196

FILE NAME = V:\Projects\ANY\K3\28173\CADD_MSTN\12b142\Consultants\z12b142xc.dgn
DATE/TIME = 4/29/2016
USER = 5237

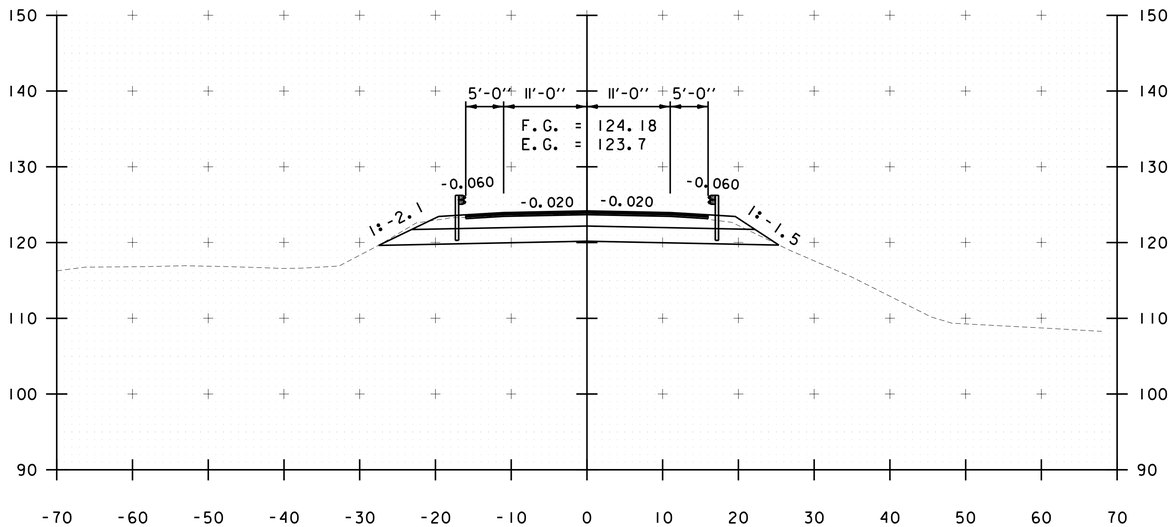

428+00

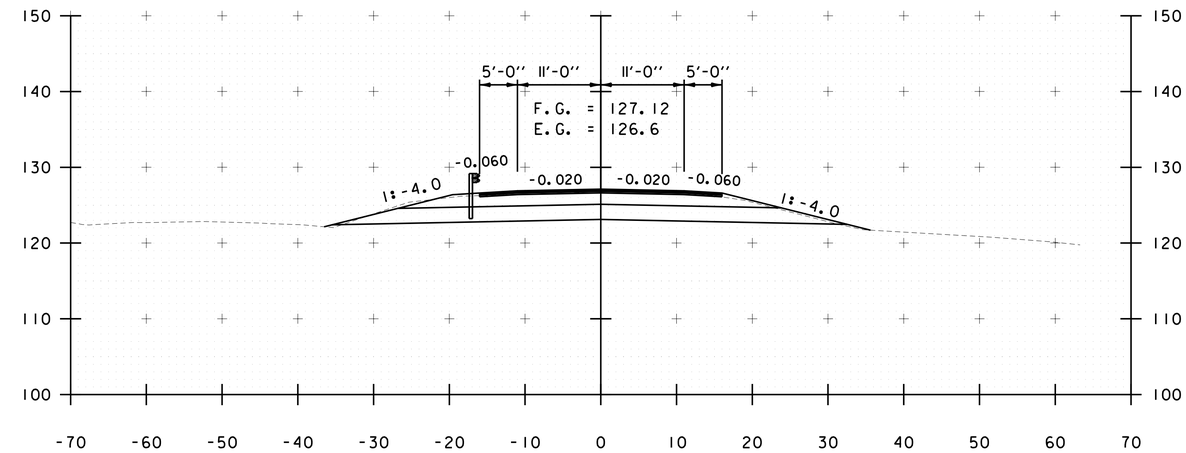

429+00

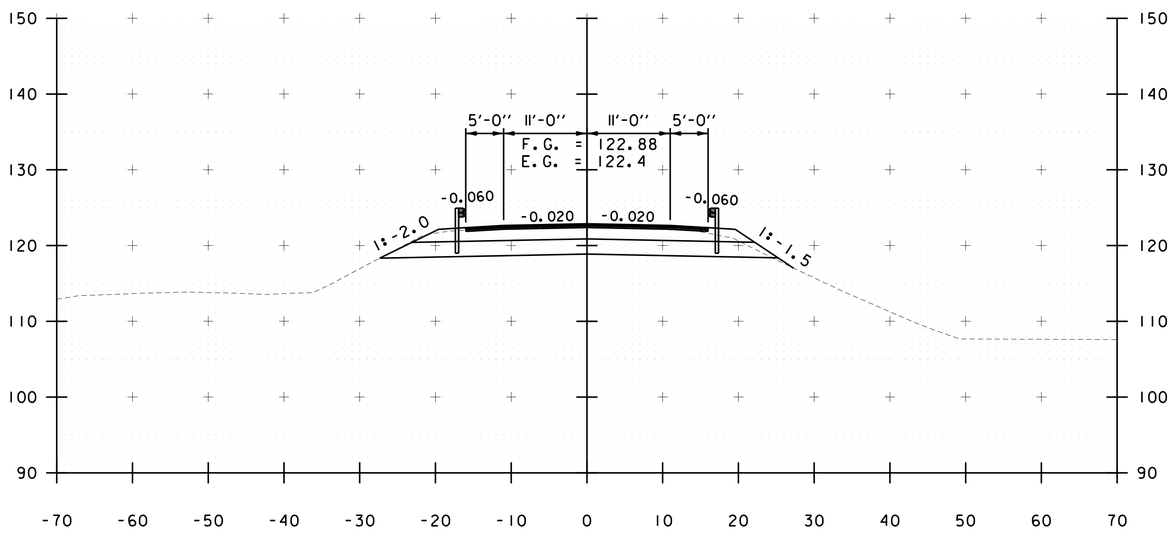

427+50

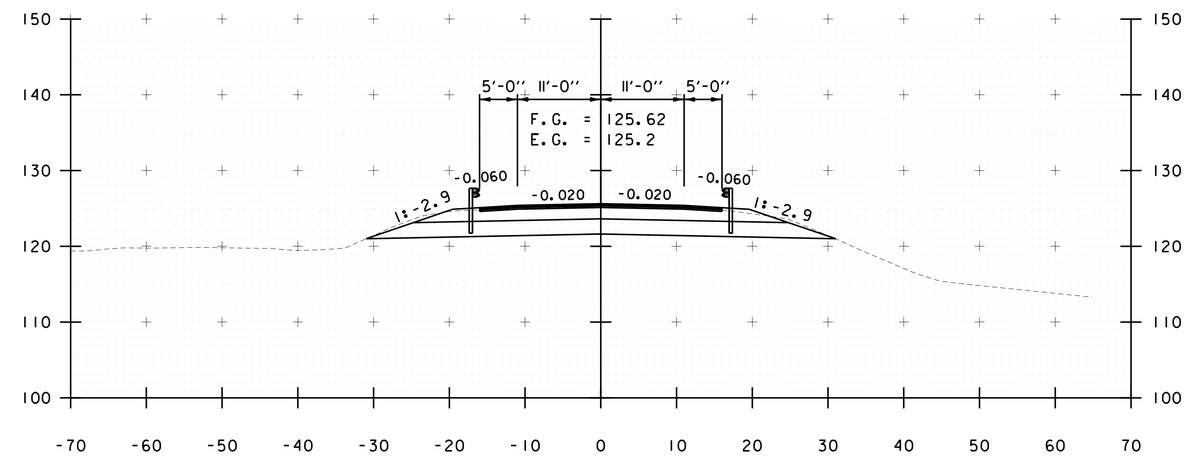

428+50

0 10 20
SCALE IN FEET

STA. 427+50 TO STA. 429+00

PROGRESS PLANS

PROJECT NAME: NORTH HERO GRAND ISLE BRIDGE
PROJECT NUMBER: BHF 028-1(26)

FILE NAME: z12b142xc.dgn
PROJECT LEADER: D. GOZALKOWSKI
DESIGNED BY: J. PARRELLI
CROSS SECTION SHEET 13

PLOT DATE: 4/29/2016
DRAWN BY: A. KIRBY
CHECKED BY: J. SHIELDS
SHEET 51 OF 196

FILE NAME = V:\Projects\ANY\K3\28173\CADD_MSTN\12b142\Consultants\z12b142xc.dgn
DATE/TIME = 4/29/2016
USER = 5237

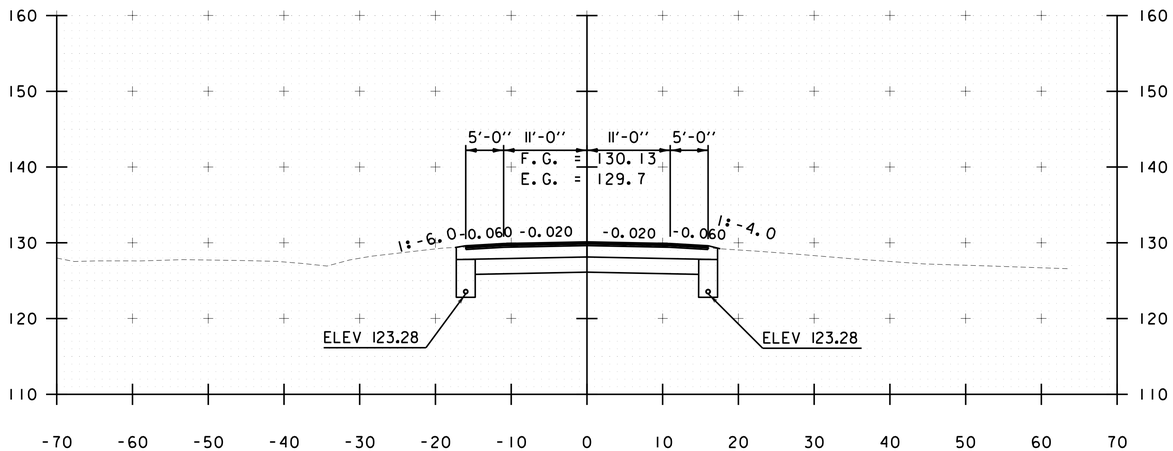

430+00

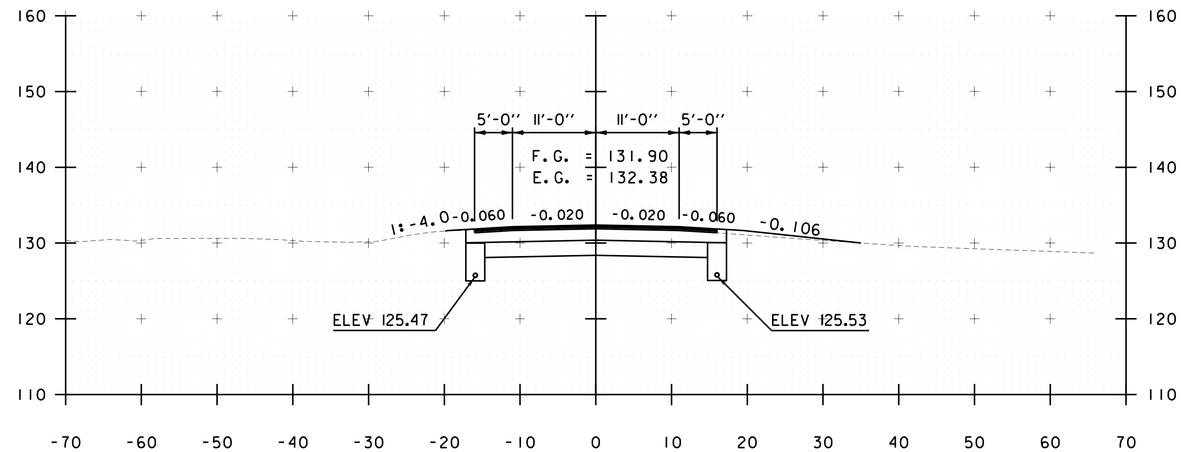

430+75

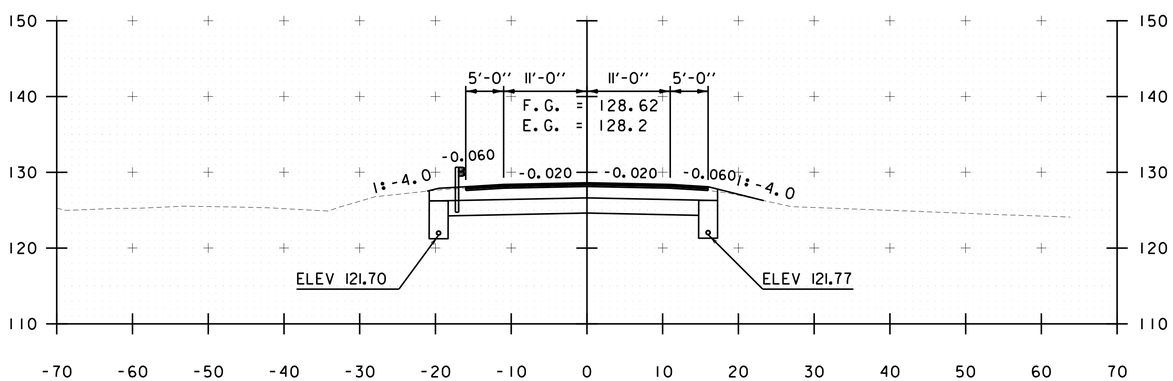

429+50

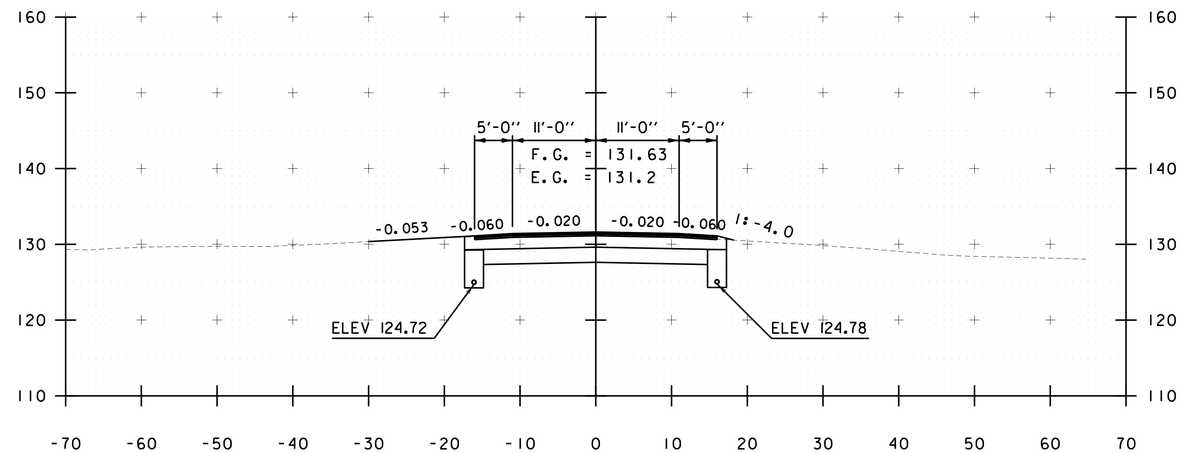

430+50

0 10 20
SCALE IN FEET

PROGRESS PLANS

STA. 429+50 TO STA. 430+75

CHA

PROJECT NAME: NORTH HERO GRAND ISLE BRIDGE	
PROJECT NUMBER: BHF 028-1(26)	
FILE NAME: z12b142xc.dgn	PLOT DATE: 4/29/2016
PROJECT LEADER: D. GOZALKOWSKI	DRAWN BY: A. KIRBY
DESIGNED BY: J. PARRELLI	CHECKED BY: J. SHIELDS
CROSS SECTION SHEET 14	SHEET 52 OF 196

FILE NAME = V:\Projects\ANY\K3\28173\CADD_MSTN\12b142\Consultants\z12b142xc.dgn
DATE/TIME = 4/29/2016
USER = 5237

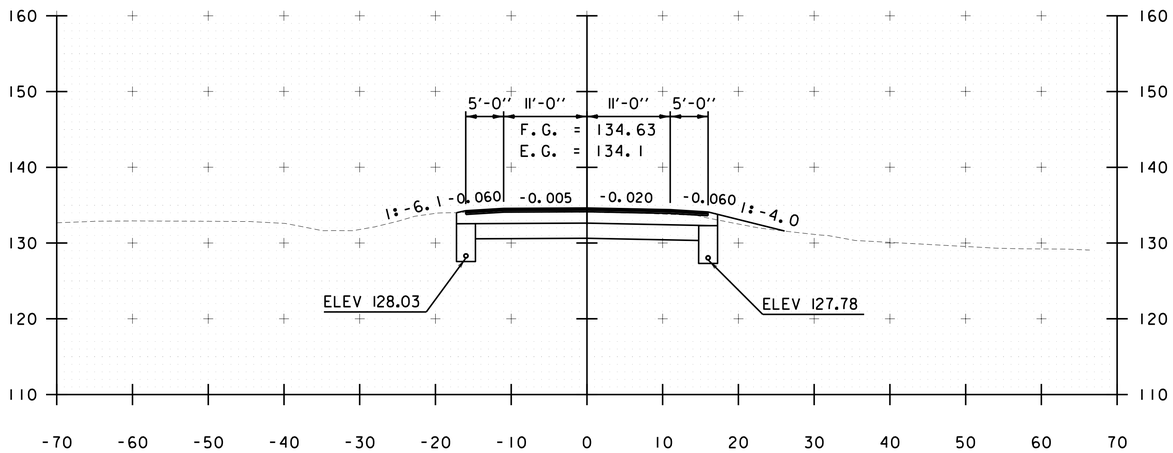

431+50

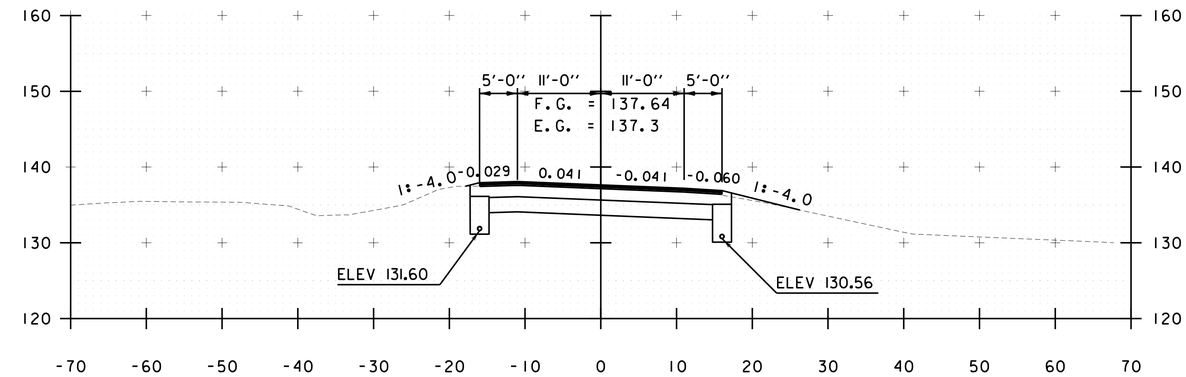

432+50

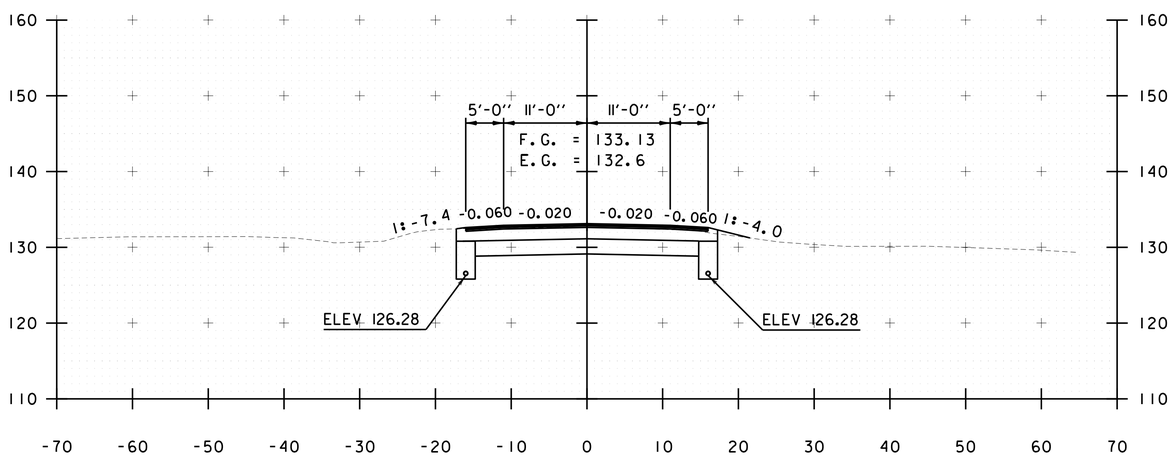

431+00

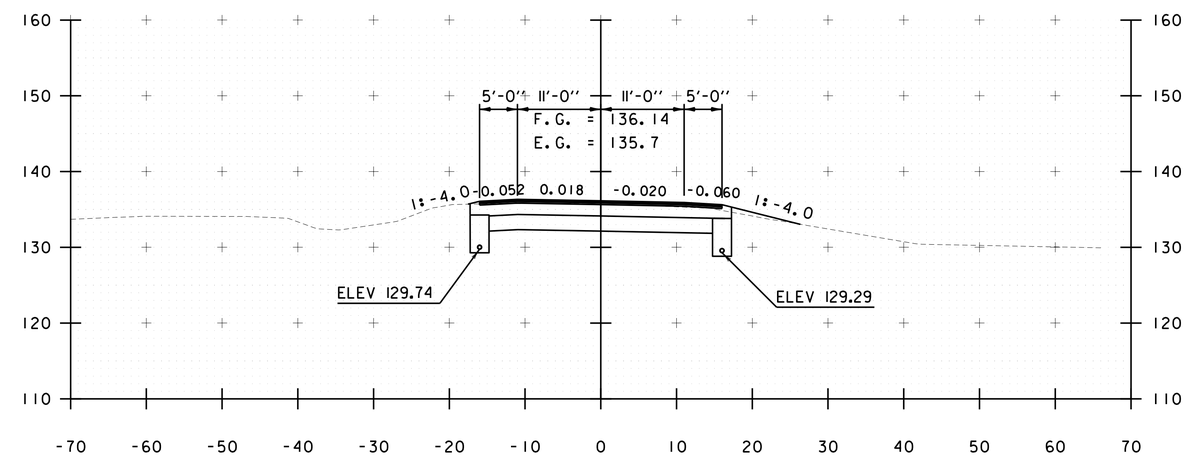

432+00

0 10 20
SCALE IN FEET

STA. 431+00 TO STA. 432+50

PROGRESS PLANS

PROJECT NAME: NORTH HERO GRAND ISLE BRIDGE
PROJECT NUMBER: BHF 028-1(26)

FILE NAME: z12b142xc.dgn
PROJECT LEADER: D. GOZALKOWSKI
DESIGNED BY: J. PARRELLI
CROSS SECTION SHEET 15

PLOT DATE: 4/29/2016
DRAWN BY: A. KIRBY
CHECKED BY: J. SHIELDS
SHEET 53 OF 196

FILE NAME = V:\Projects\ANY\K3\28173\CADD_MSTN\12b142\Consultants\z12b142xc.dgn
DATE/TIME = 4/29/2016
USER = 5237

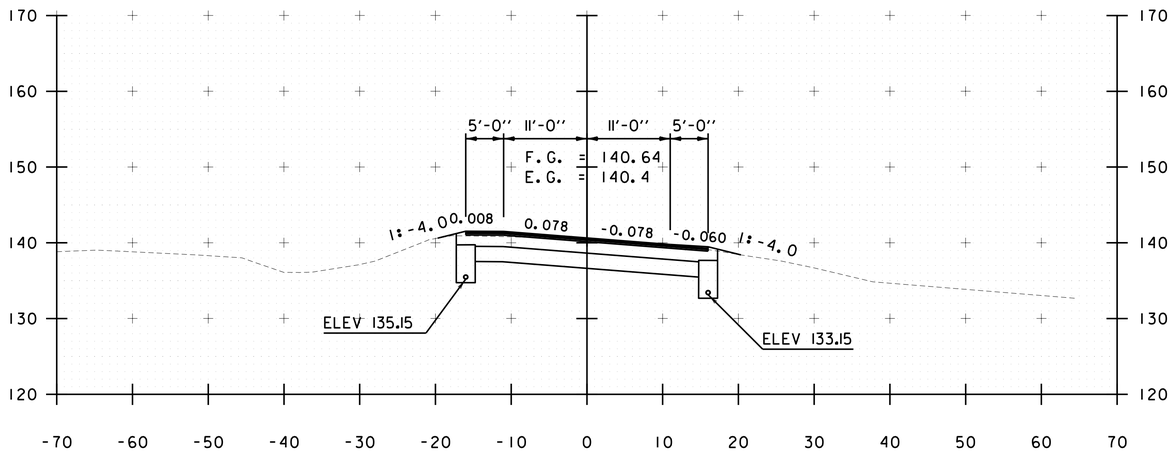

433+50

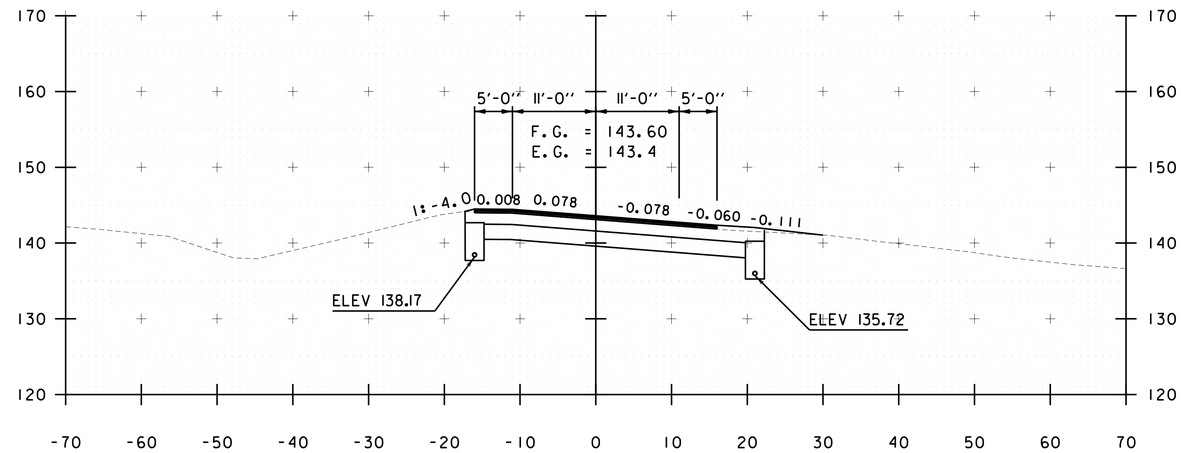

434+50

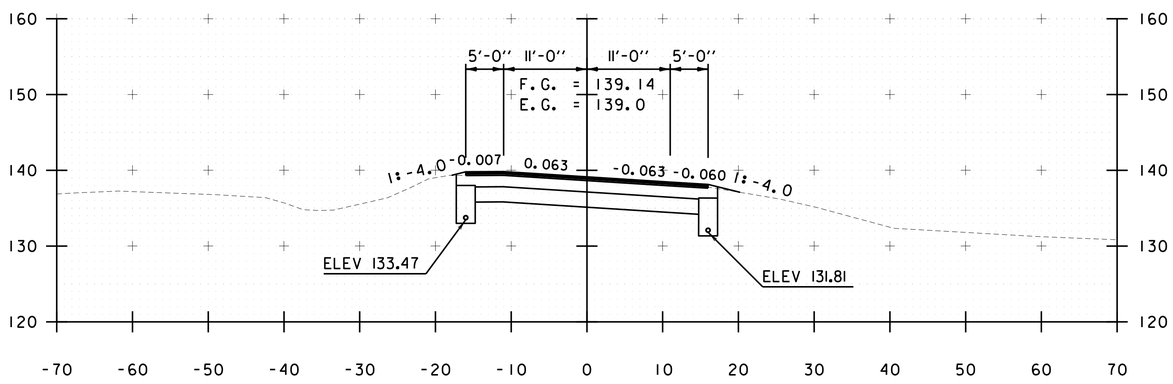

433+00

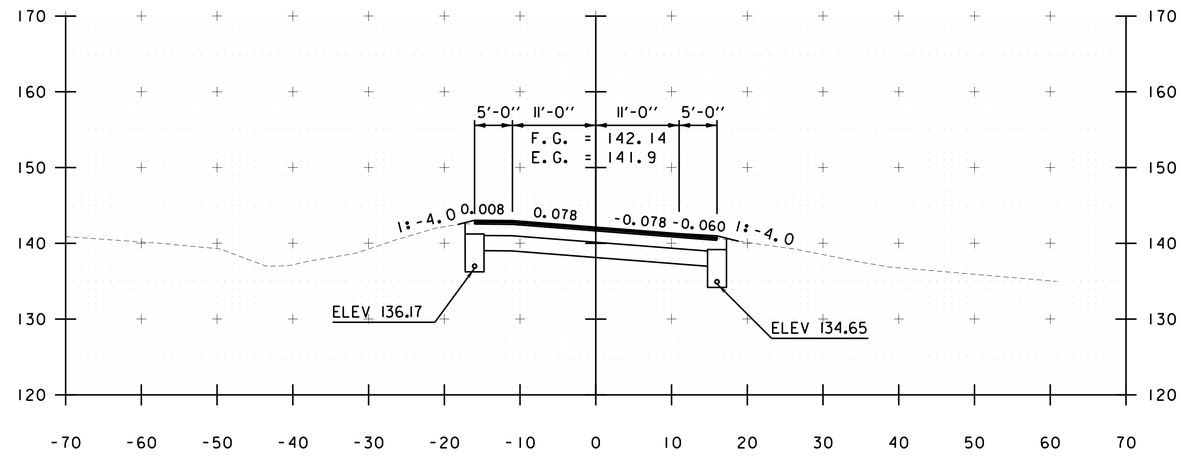

434+00

0 10 20
SCALE IN FEET

PROGRESS PLANS

STA. 433+00 TO STA. 434+50

CHA

PROJECT NAME: NORTH HERO GRAND ISLE BRIDGE	
PROJECT NUMBER: BHF 028-1(26)	
FILE NAME: z12b142xc.dgn	PLOT DATE: 4/29/2016
PROJECT LEADER: D. GOZALKOWSKI	DRAWN BY: A. KIRBY
DESIGNED BY: J. PARRELLI	CHECKED BY: J. SHIELDS
CROSS SECTION SHEET 16	SHEET 54 OF 196

FILE NAME = V:\Projects\ANY\K3\28173\CADD_MSTN\12b142\Consultants\z12b142xc.dgn
DATE/TIME = 4/29/2016
USER = 5237

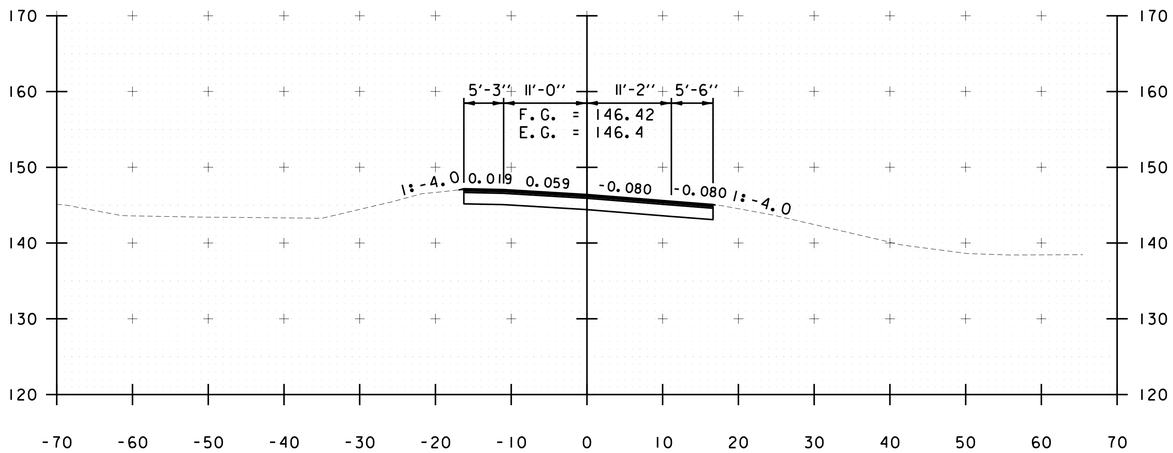

435+50

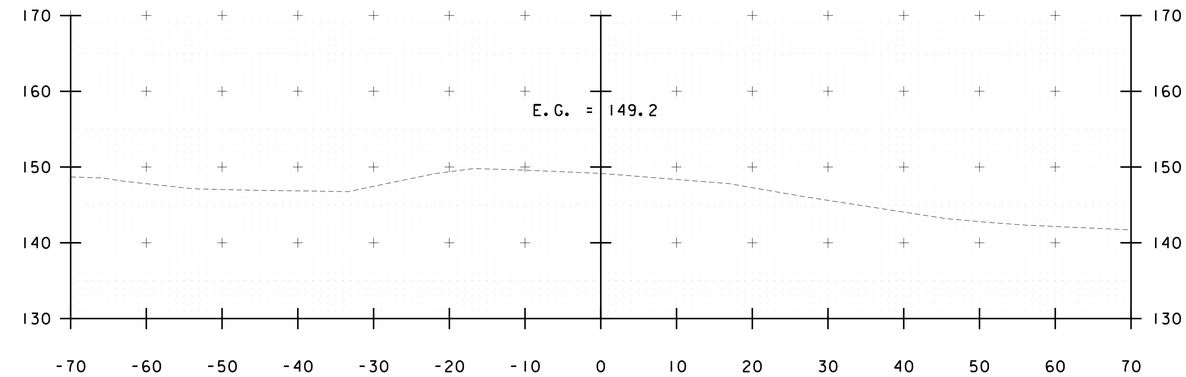

436+50

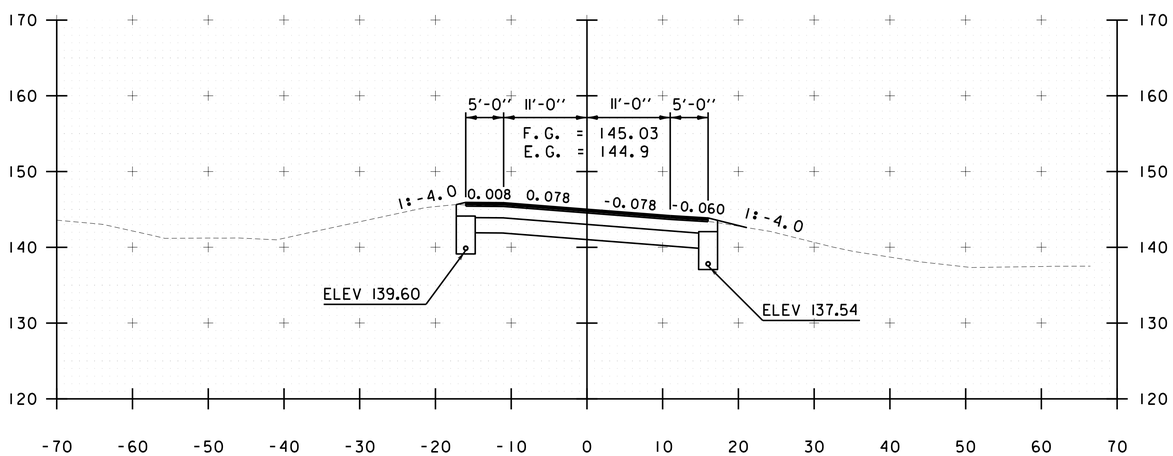

435+00

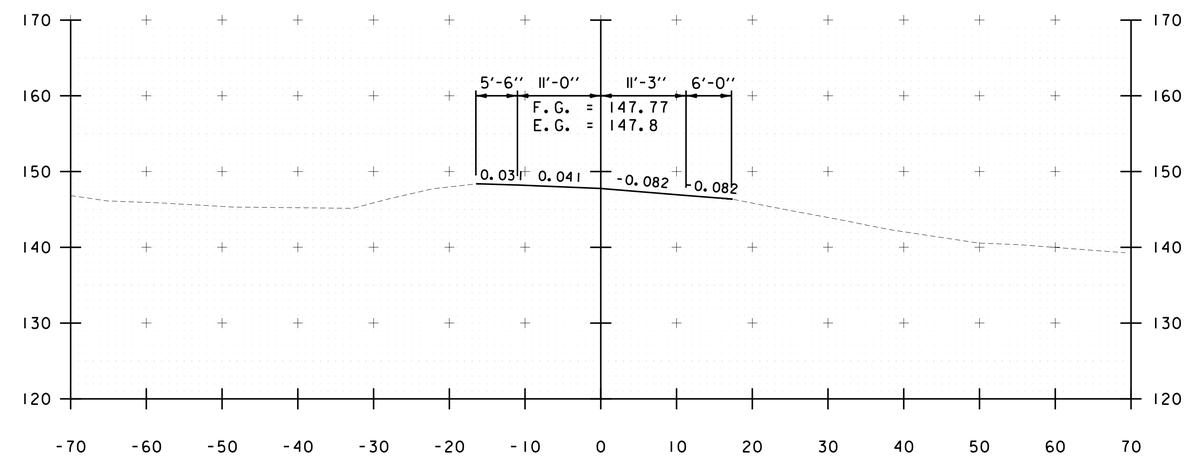

436+00

0 10 20
SCALE IN FEET

STA. 435+00 TO STA. 436+50

PROGRESS PLANS

PROJECT NAME: NORTH HERO GRAND ISLE BRIDGE
PROJECT NUMBER: BHF 028-1(26)

FILE NAME: z12b142xc.dgn
PROJECT LEADER: D. GOZALKOWSKI
DESIGNED BY: J. PARRELLI
CROSS SECTION SHEET 17

PLOT DATE: 4/29/2016
DRAWN BY: A. KIRBY
CHECKED BY: J. SHIELDS
SHEET 55 OF 196

FILE NAME = V:\Projects\ANY\K3\28173\CADD_MSTN\12b142\Consultants\z12b142xc.dgn
DATE/TIME = 4/29/2016
USER = 5237

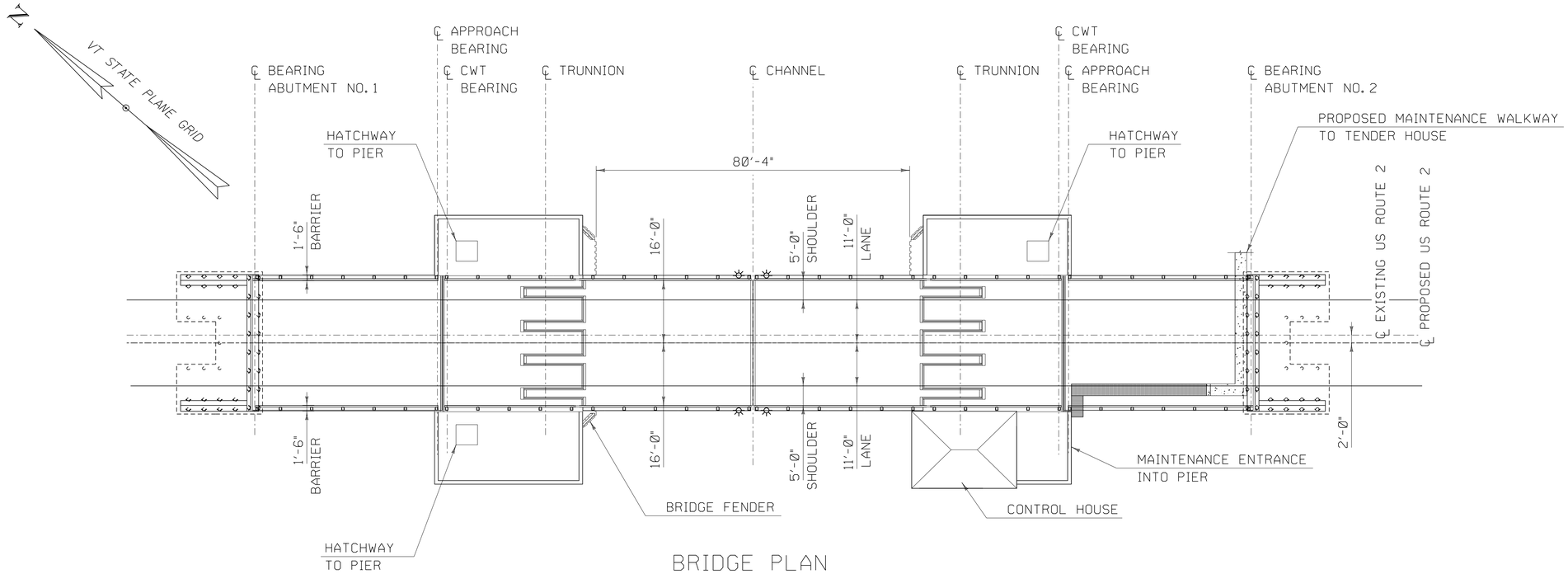

BRIDGE PLAN

SCALE 1/16" = 1'-0"

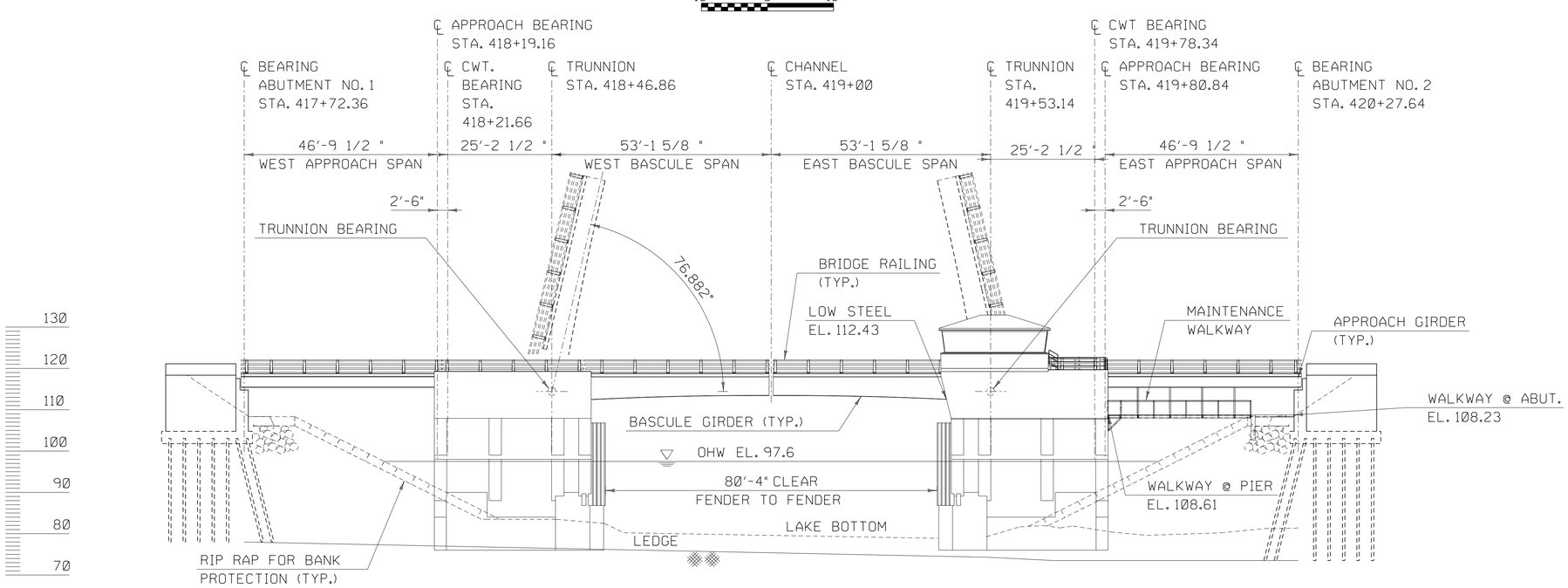

BRIDGE ELEVATION

SCALE 1/16" = 1'-0"

PROGRESS PLANS

PROJECT NAME: NORTH HERO GRAND ISLE BRIDGE	
PROJECT NUMBER: BHF 028-1(26)	
FILE NAME: z12br142pe.dgn	PLOT DATE: 4/25/2016
PROJECT LEADER: T. FRENCH	DRAWN BY: S. SANTRICH
DESIGNED BY: H. PROTIN	CHECKED BY: P. DAVIS
BRIDGE PLAN & ELEVATION	SHEET 56 OF 196

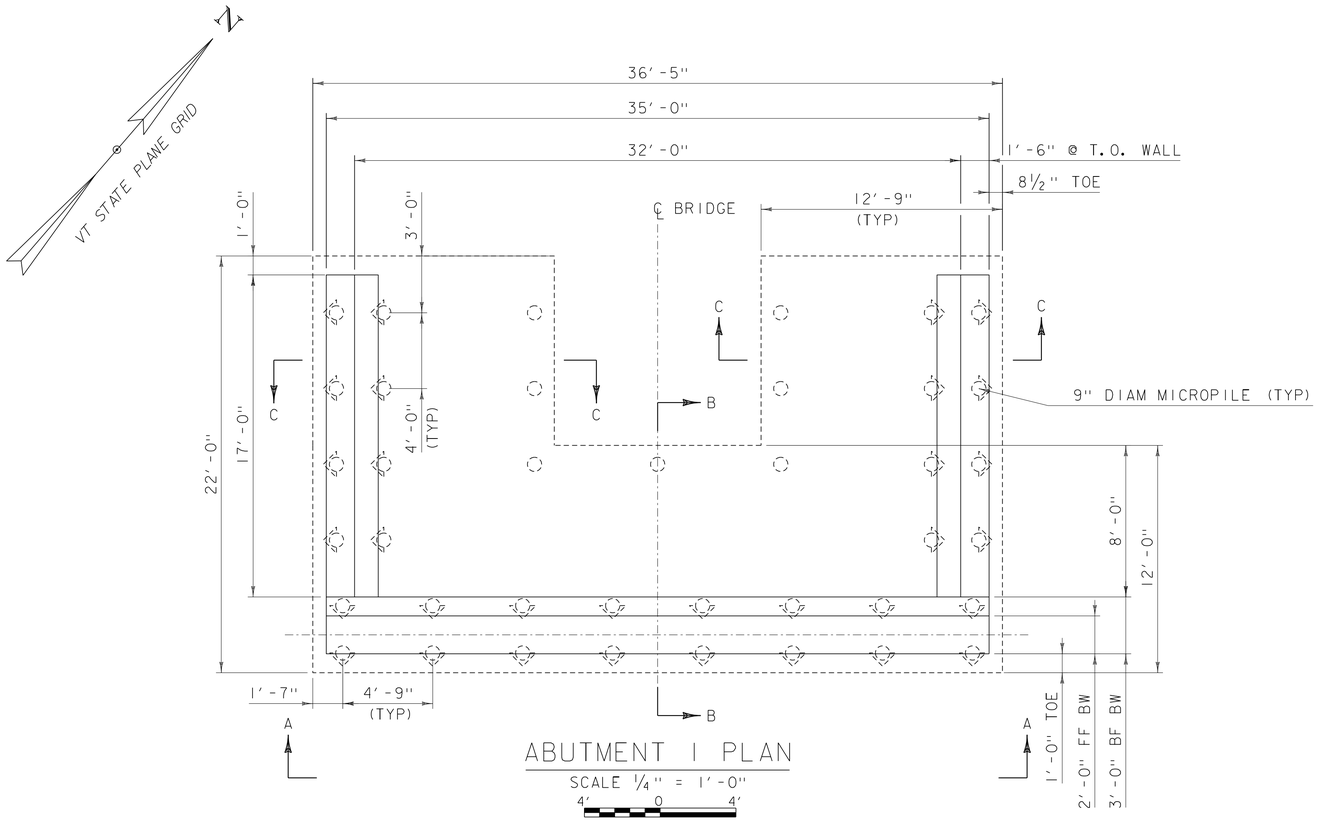

ABUTMENT 1 PLAN

SCALE ¼" = 1'-0"

4' 0 4'

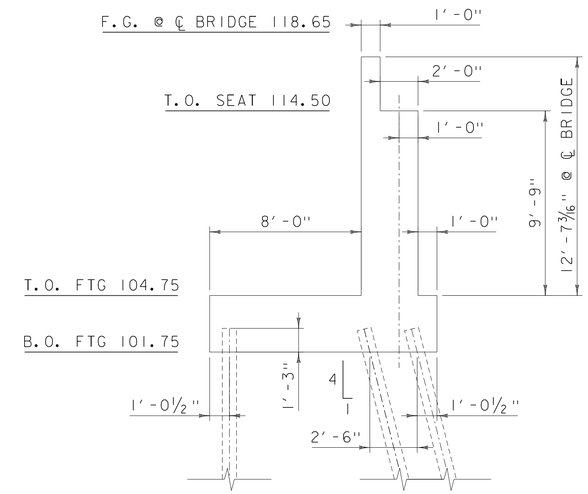

SECTION B-B

SCALE ¼" = 1'-0"

4' 0 4'

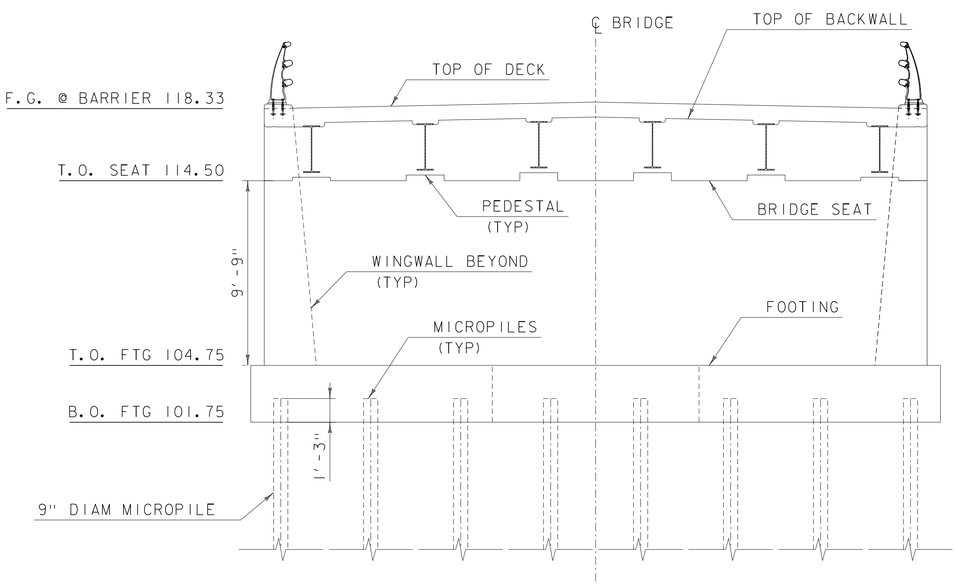

ELEVATION A-A

SCALE ¼" = 1'-0"

4' 0 4'

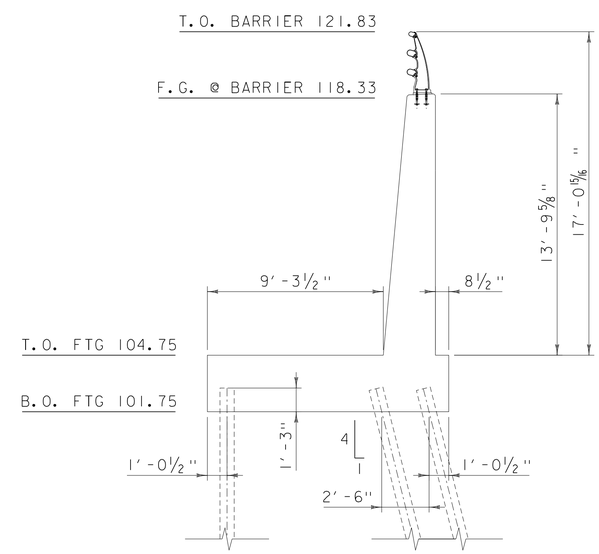

SECTION C-C

SCALE ¼" = 1'-0"

4' 0 4'

PROGRESS PLANS

HDR

PROJECT NAME: NORTH HERO GRAND ISLE BRIDGE	
PROJECT NUMBER: BHF 028-1(26)	
FILE NAME: z12b142abutment.dgn	PLOT DATE: 4/25/2016
PROJECT LEADER: T. FRENCH	DRAWN BY: P. LEFEBVRE
DESIGNED BY: P. LEFEBVRE	CHECKED BY: J. MURPHY
ABUTMENT 1 PLAN & ELEVATION	SHEET 57 OF 196

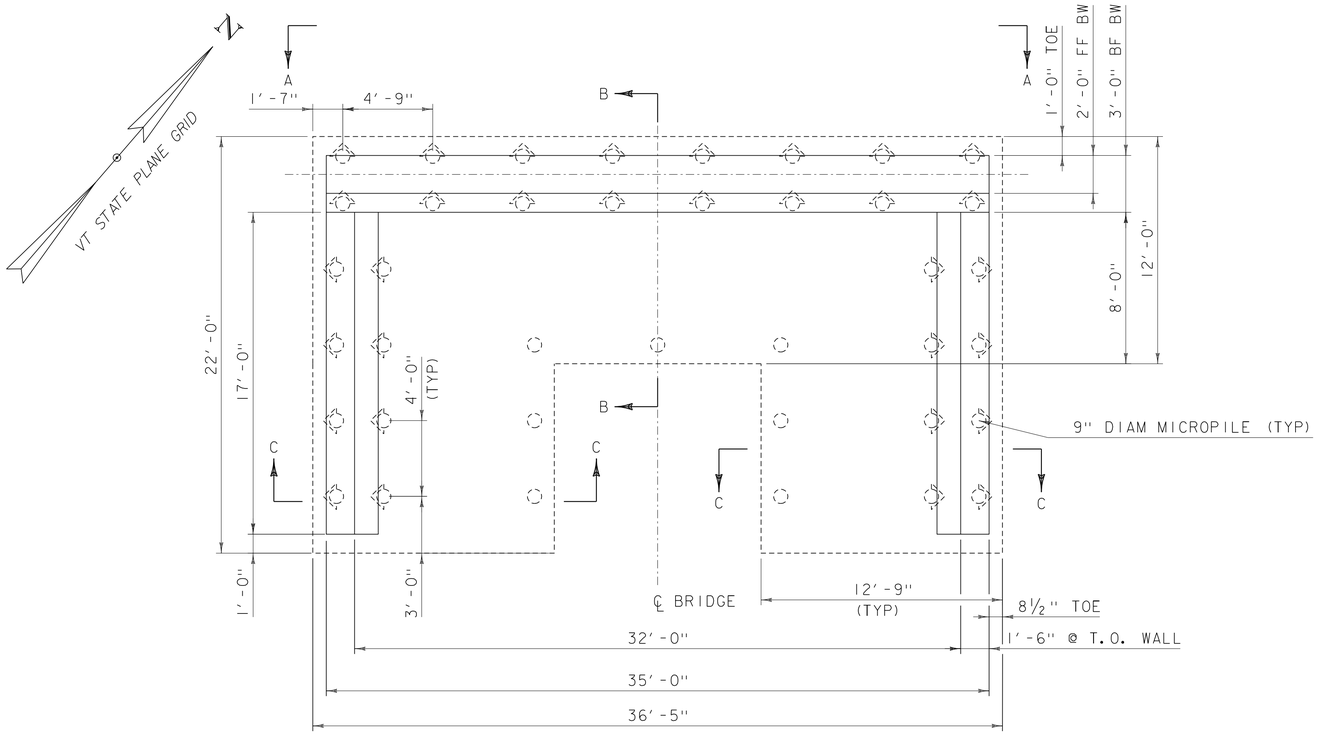

ABUTMENT 2 PLAN

SCALE ¼" = 1'-0"

4' 0 4'

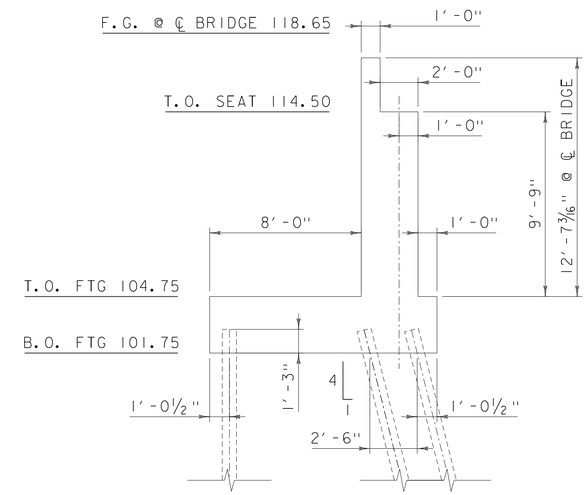

SECTION B-B

SCALE ¼" = 1'-0"

4' 0 4'

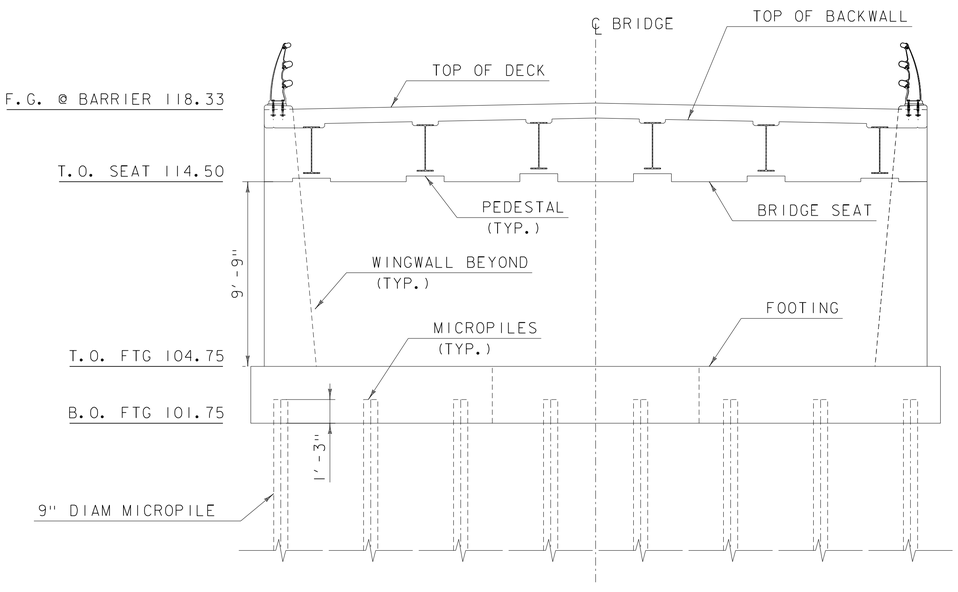

ELEVATION A-A

SCALE ¼" = 1'-0"

4' 0 4'

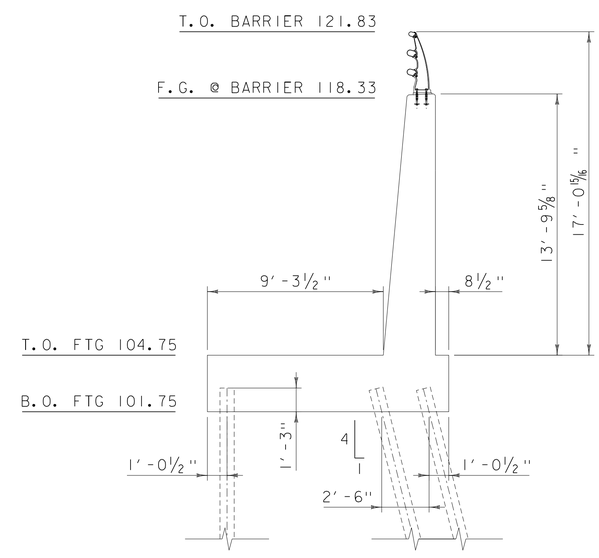

SECTION C-C

SCALE ¼" = 1'-0"

4' 0 4'

PROGRESS PLANS

HDR

PROJECT NAME: NORTH HERO GRAND ISLE BRIDGE	
PROJECT NUMBER: BHF 028-1(26)	
FILE NAME: zl2bl42abutmnt2.dgn	PLOT DATE: 4/25/2016
PROJECT LEADER: T. FRENCH	DRAWN BY: P. LEFEBVRE
DESIGNED BY: P. LEFEBVRE	CHECKED BY: P. LEFEBVRE
ABUTMENT 2 PLAN & ELEVATION	SHEET 58 OF 196

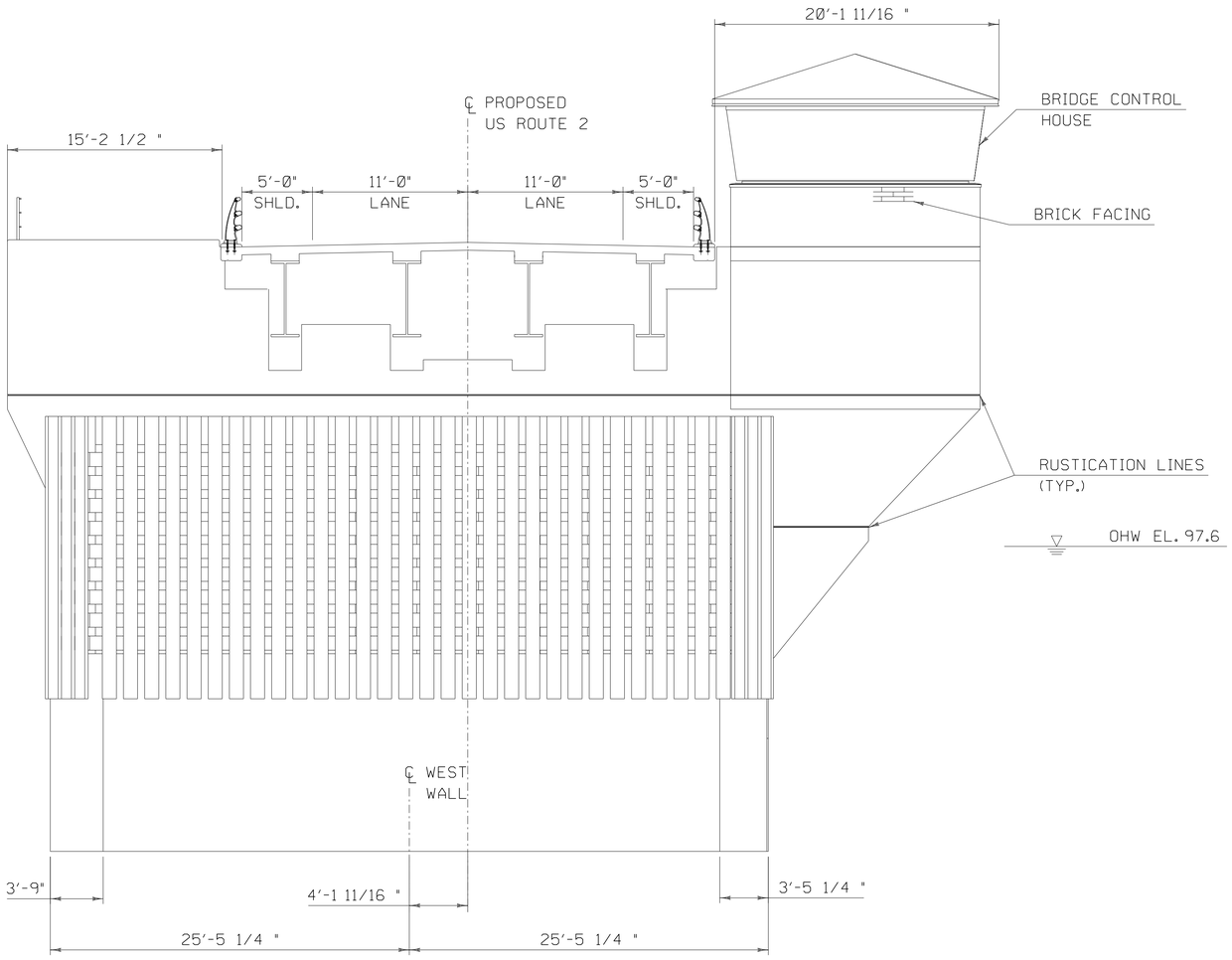

WEST ELEVATION

SCALE 3/16" = 1'-0"
5.33' 0 5.33'

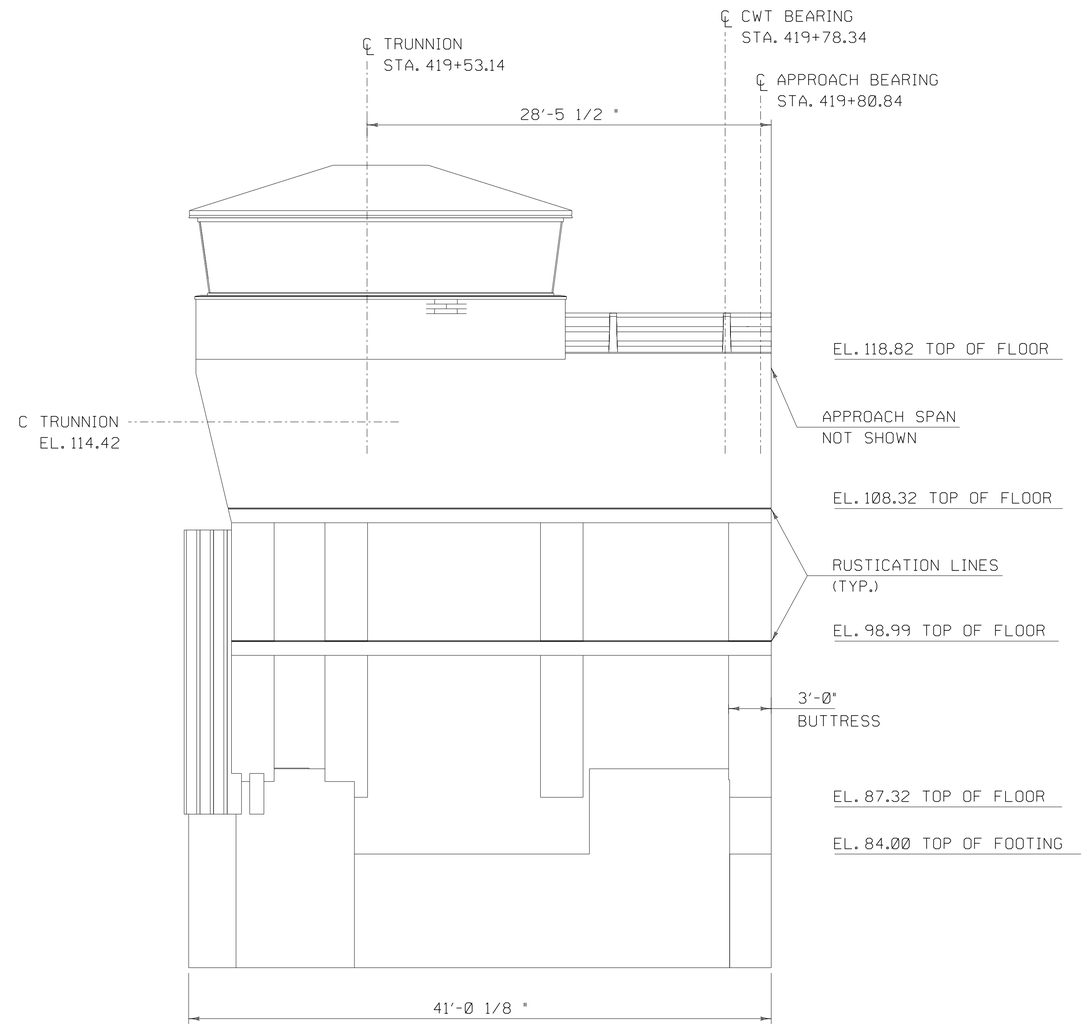

SOUTH ELEVATION

SCALE 3/16" = 1'-0"
5.33' 0 5.33'

PROGRESS PLANS

NOTE

1. FENDER SYSTEM AND MAINTENANCE WALKWAY NOT SHOWN FOR CLARITY

HDR

PROJECT NAME: NORTH HERO GRAND ISLE BRIDGE	
PROJECT NUMBER: BHF 028-1(26)	
FILE NAME: z12b142pierel1.dgn	PLOT DATE: 4/25/2016
PROJECT LEADER: T. FRENCH	DRAWN BY: S. SANTRICH
DESIGNED BY: H. PROTIN	CHECKED BY: P. DAVIS
PIER NO. 2 ELEVATIONS - 1	SHEET ~~59~~ 61 OF 196

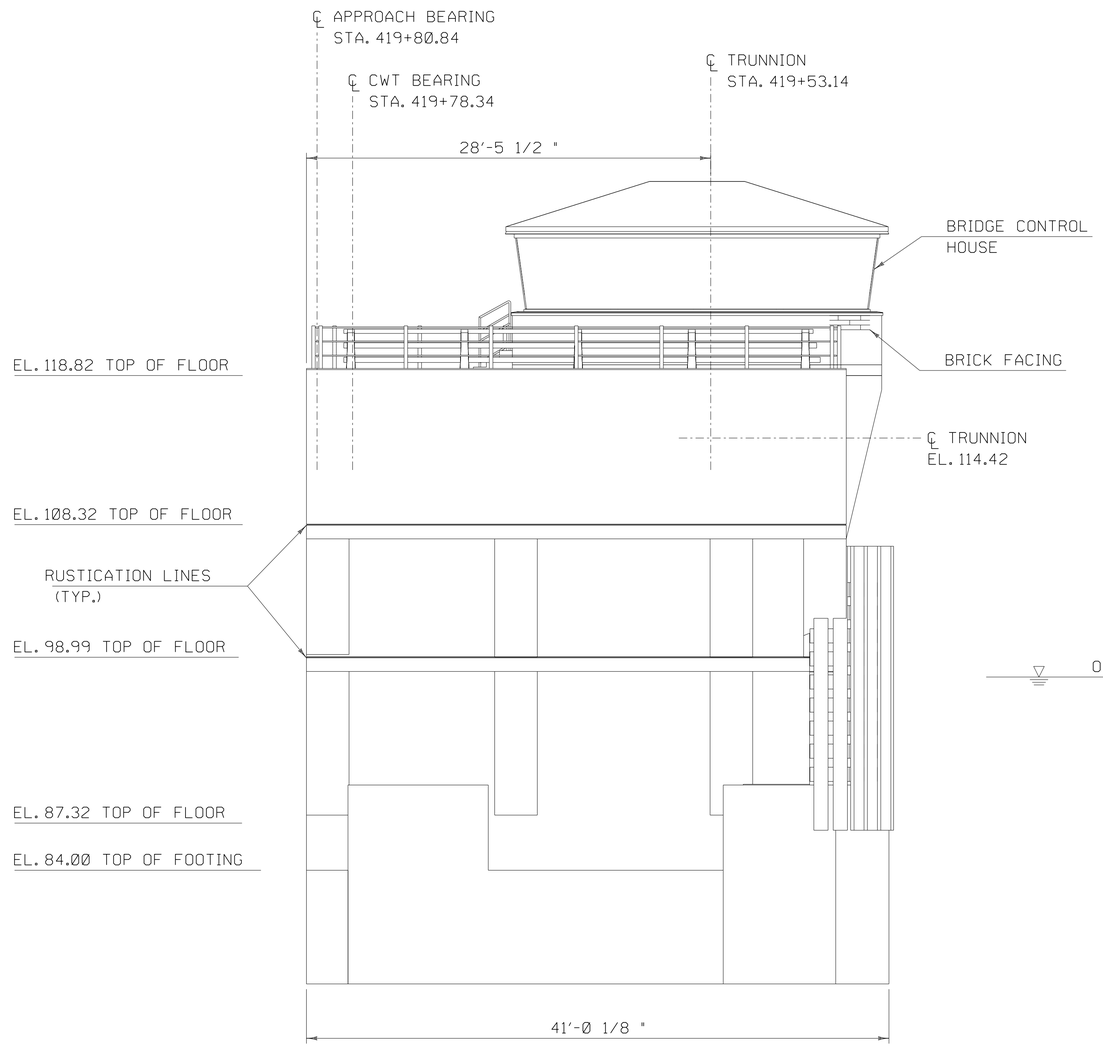

NORTH ELEVATION

SCALE 3/16" = 1'-0"

5.33' 0 5.33'

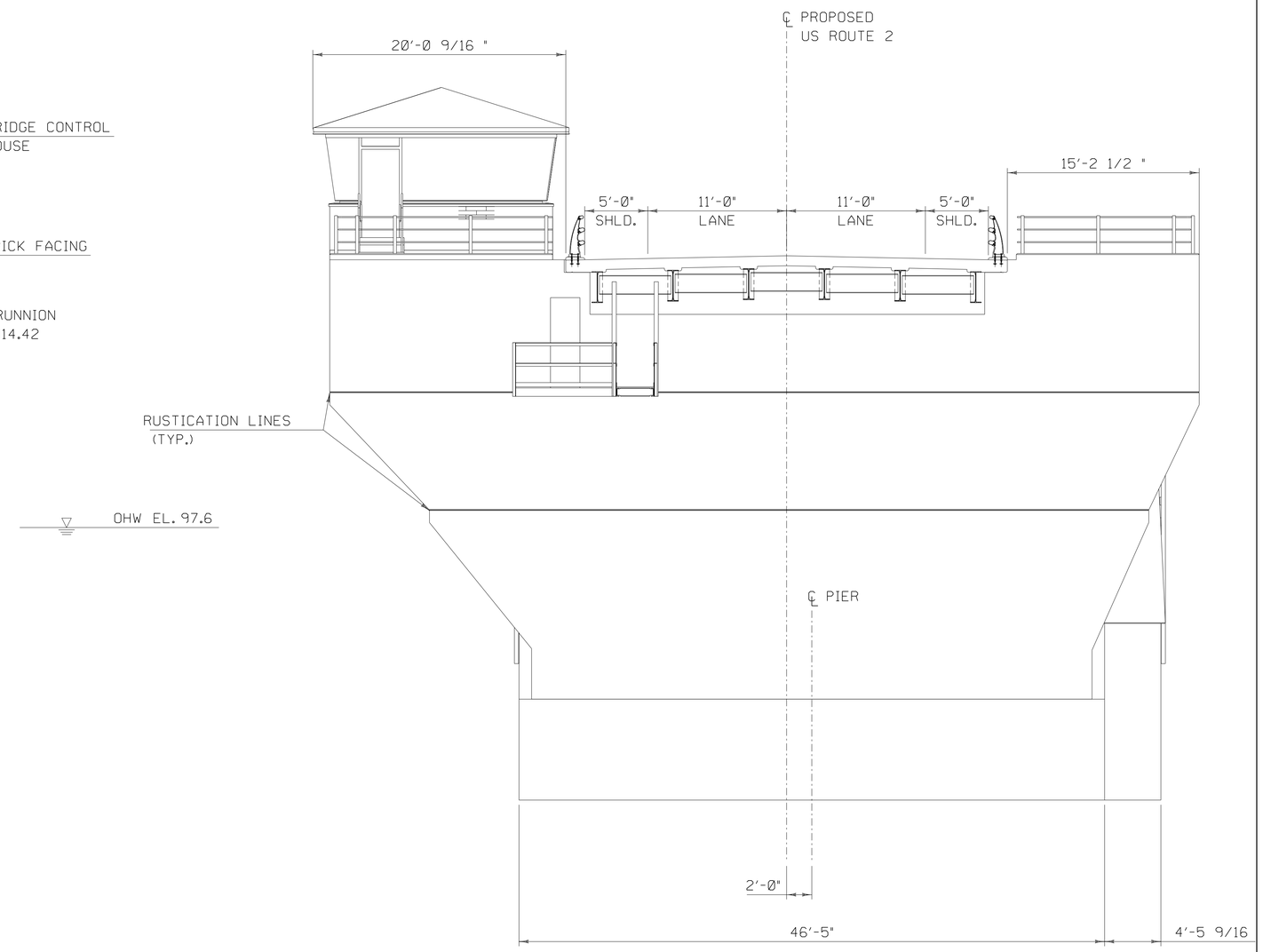

EAST ELEVATION

SCALE 3/16" = 1'-0"

5.33' 0 5.33'

PROGRESS PLANS

NOTE

1. FENDER SYSTEM AND MAINTENANCE WALKWAY NOT SHOWN FOR CLARITY

HDR

PROJECT NAME: NORTH HERO GRAND ISLE BRIDGE	
PROJECT NUMBER: BHF 028-1(26)	
FILE NAME: z12b142pierel2.dgn	PLOT DATE: 4/25/2016
PROJECT LEADER: T. FRENCH	DRAWN BY: S. SANTRICH
DESIGNED BY: H. PROTIN	CHECKED BY: P. DAVIS
PIER NO. 2 ELEVATIONS - 2	SHEET 62 OF 196

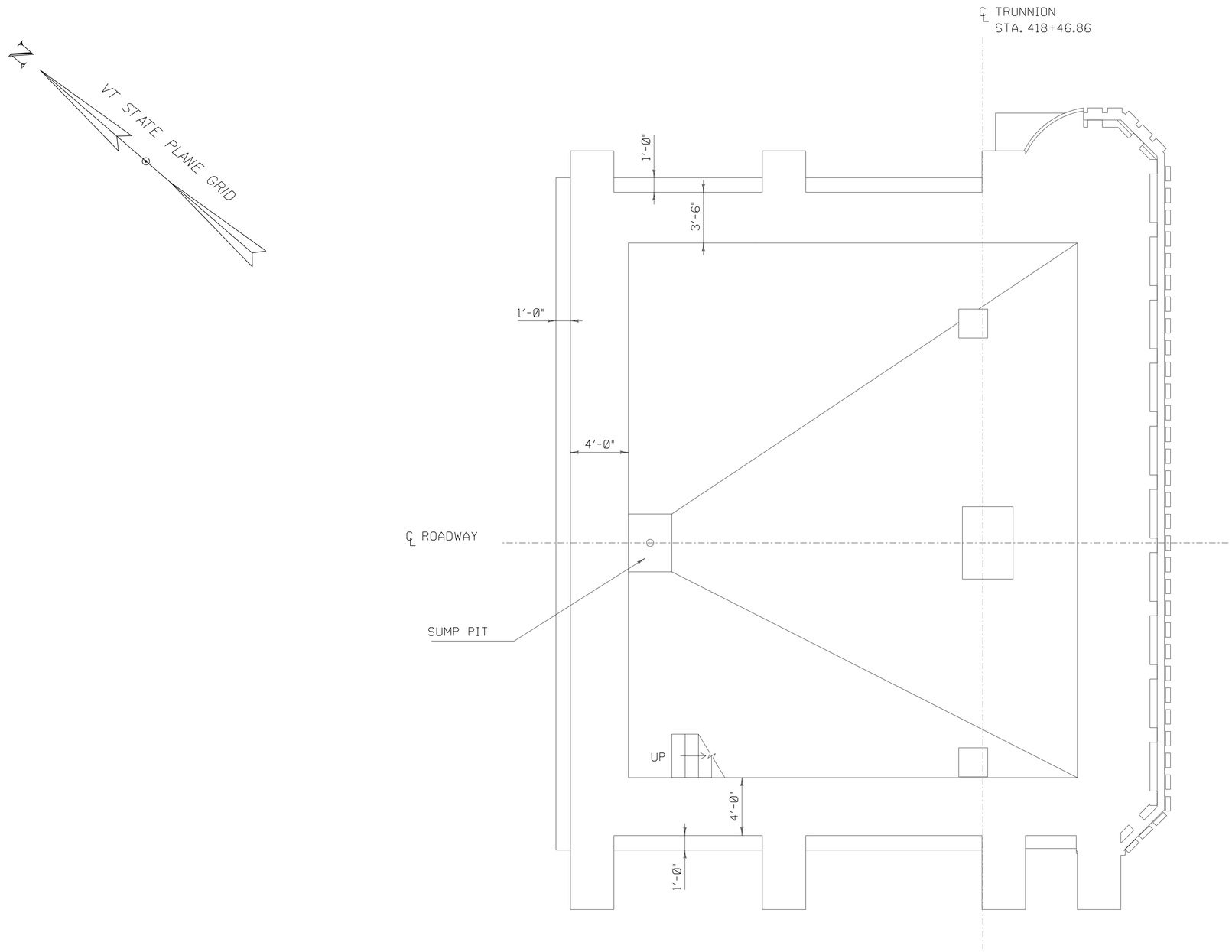

PIER 1 PLAN AT EL. 87.32

SCALE ¼" = 1'-0"
4' 0 4'

PROGRESS PLANS

NOTE

1. EXISTING FENDER SHOWN.
   NEW FENDER TO BE DEVELOPED.

HDR

PROJECT NAME: NORTH HERO GRAND ISLE BRIDGE	
PROJECT NUMBER: BHF 028-1(26)	
FILE NAME: z12b142p1level3.dgn	PLOT DATE: 4/25/2016
PROJECT LEADER: T. FRENCH	DRAWN BY: S. SANTRICH
DESIGNED BY: H. PROTIN	CHECKED BY: P. DAVIS
PIER 1 PLAN AT EL. 87.32	SHEET 65 OF 196

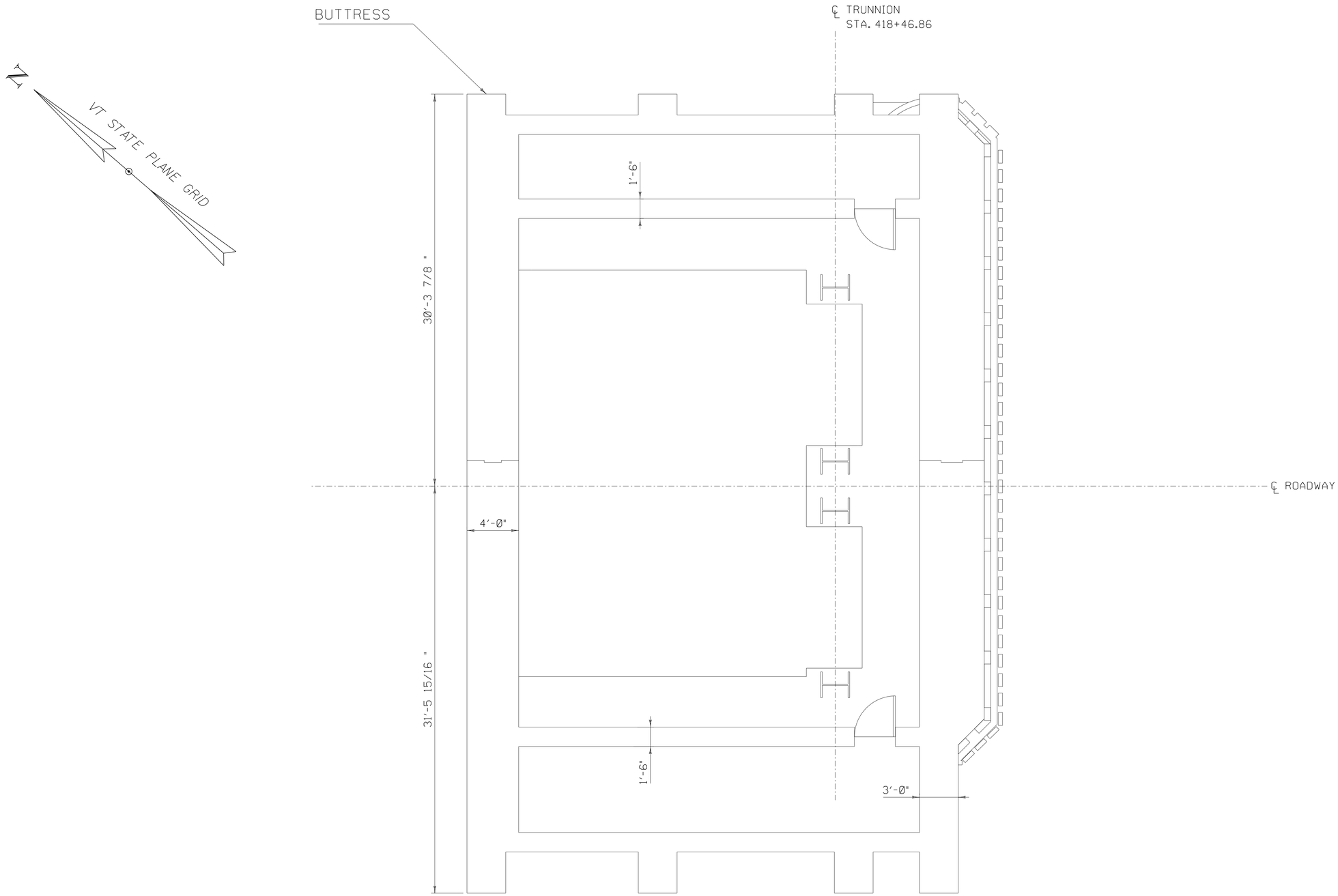

PIER 1 PLAN AT EL.98.99

SCALE ¼" = 1'-0"
4.33' 0 4.33'

NOTE

1. EXISTING FENDER SHOWN. NEW FENDER TO BE DEVELOPED.

PROGRESS PLANS

PROJECT NAME: NORTH HERO GRAND ISLE BRIDGE	
PROJECT NUMBER: BHF 028-1(26)	
FILE NAME: z12b142p1level2.dgn	PLOT DATE: 4/25/2016
PROJECT LEADER: T. FRENCH	DRAWN BY: S. SANTRICH
DESIGNED BY: H. PROTIN	CHECKED BY: P. DAVIS
PIER 1 PLAN AT EL. 98.99	SHEET 66 OF 196

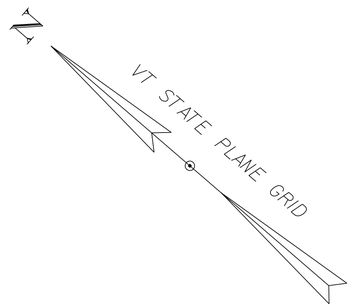

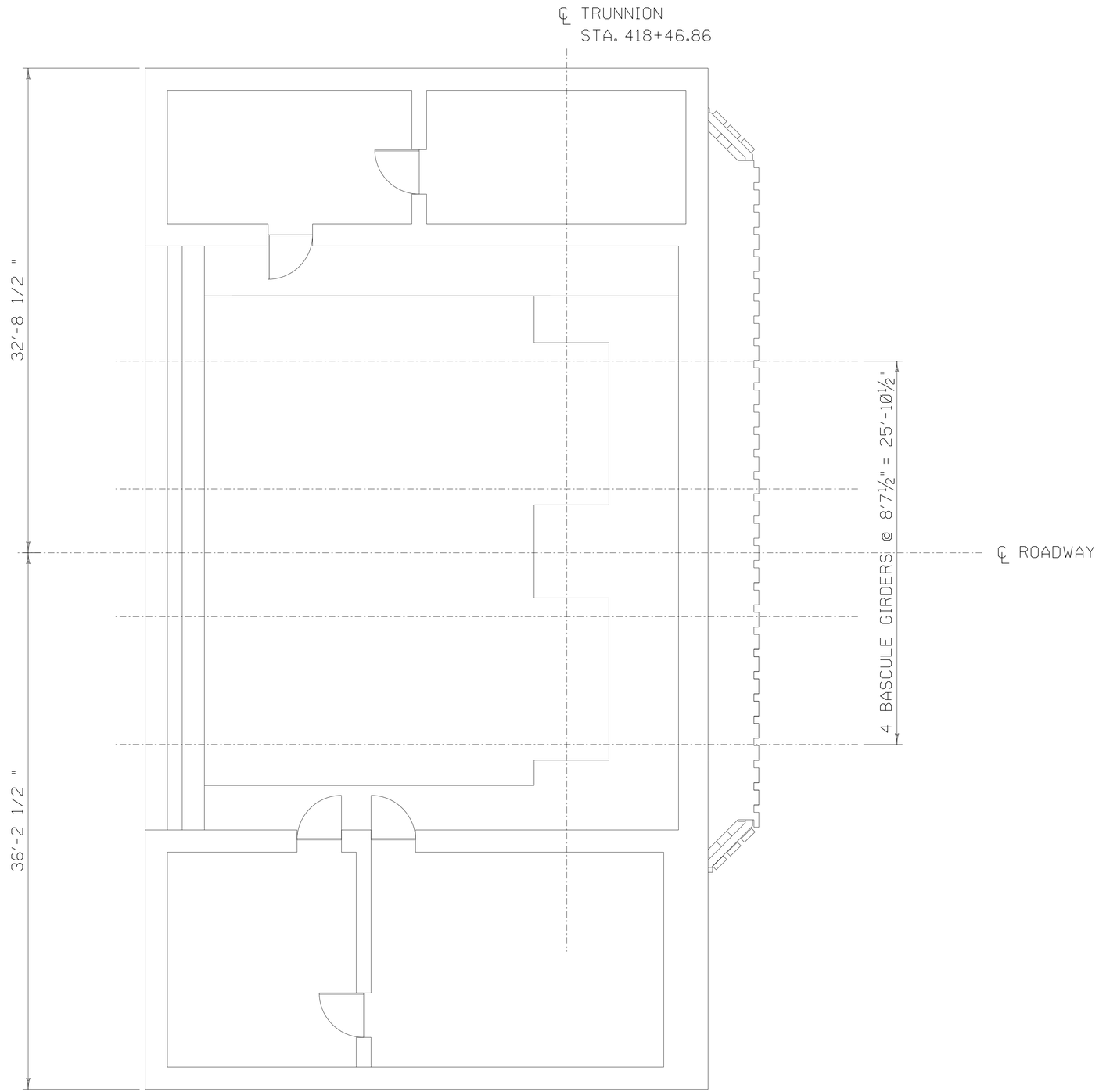

PIER 1 PLAN AT EL. 108.32

SCALE ¼" = 1'-0"

4' 0 4'

NOTE

1. EXISTING FENDER SHOWN

PROGRESS PLANS

PROJECT NAME: NORTH HERO GRAND ISLE BRIDGE

PROJECT NUMBER: BHF 028-1(26)

FILE NAME: z12b142p1level1.dgn

PROJECT LEADER: T. FRENCH

DESIGNED BY: H. PROTIN

PIER 1 PLAN AT EL. 108.32

PLOT DATE: 4/25/2016

DRAWN BY: S. SANTRICH

CHECKED BY: P. DAVIS

SHEET 67 OF 196

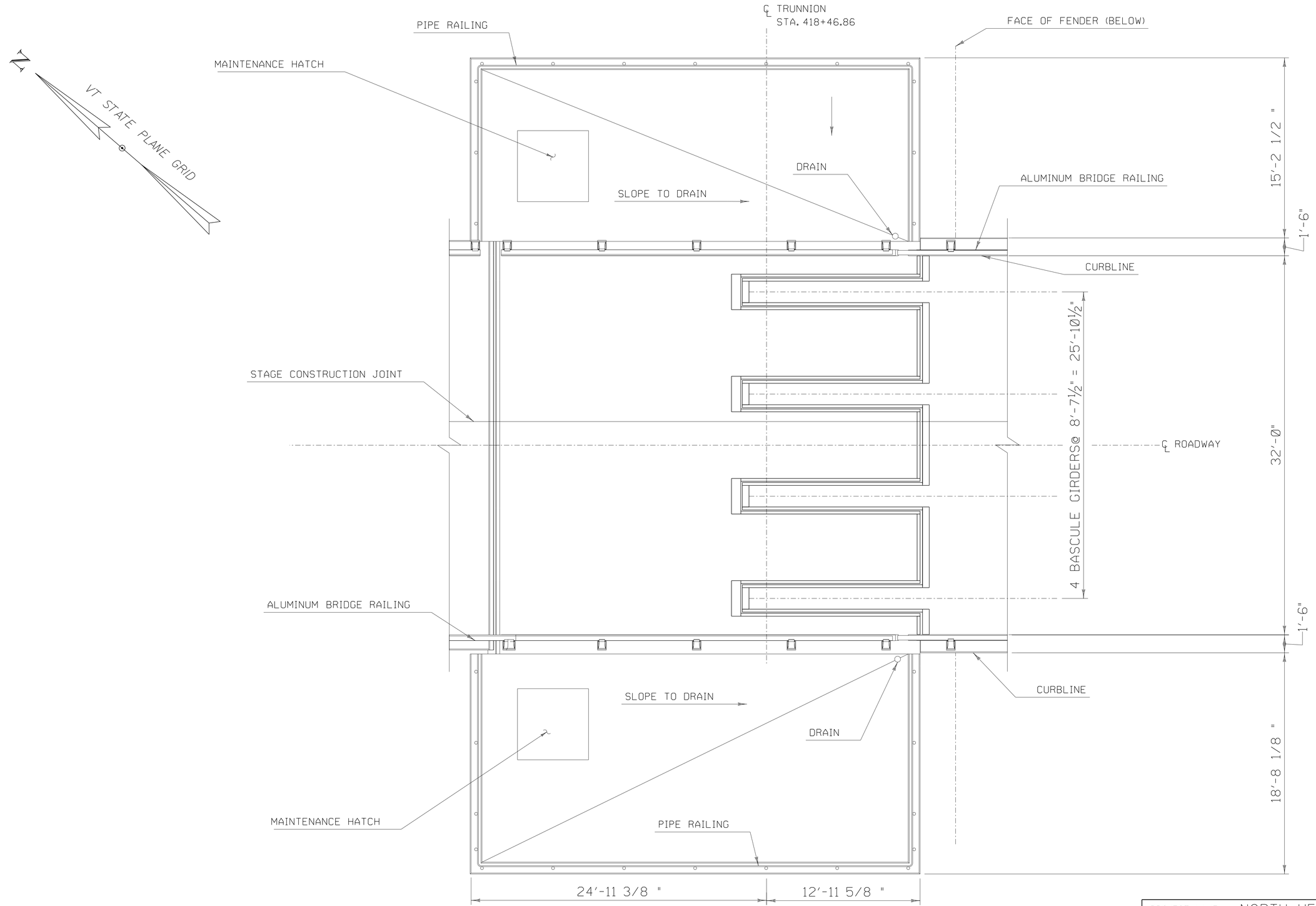

PIER 1 PLAN AT EL. 118.82

SCALE ¼" = 1'-0"

4' 0 4'

PROGRESS PLANS

PROJECT NAME: NORTH HERO GRAND ISLE BRIDGE	
PROJECT NUMBER: BHF 028-1(26)	
FILE NAME: z12b142P1level0.dgn	PLOT DATE: 4/25/2016
PROJECT LEADER: T. FRENCH	DRAWN BY: S. SANTRICH
DESIGNED BY: H. PROTIN	CHECKED BY: P. DAVIS
PIER 1 PLAN AT EL.118.82	SHEET 68 OF 196

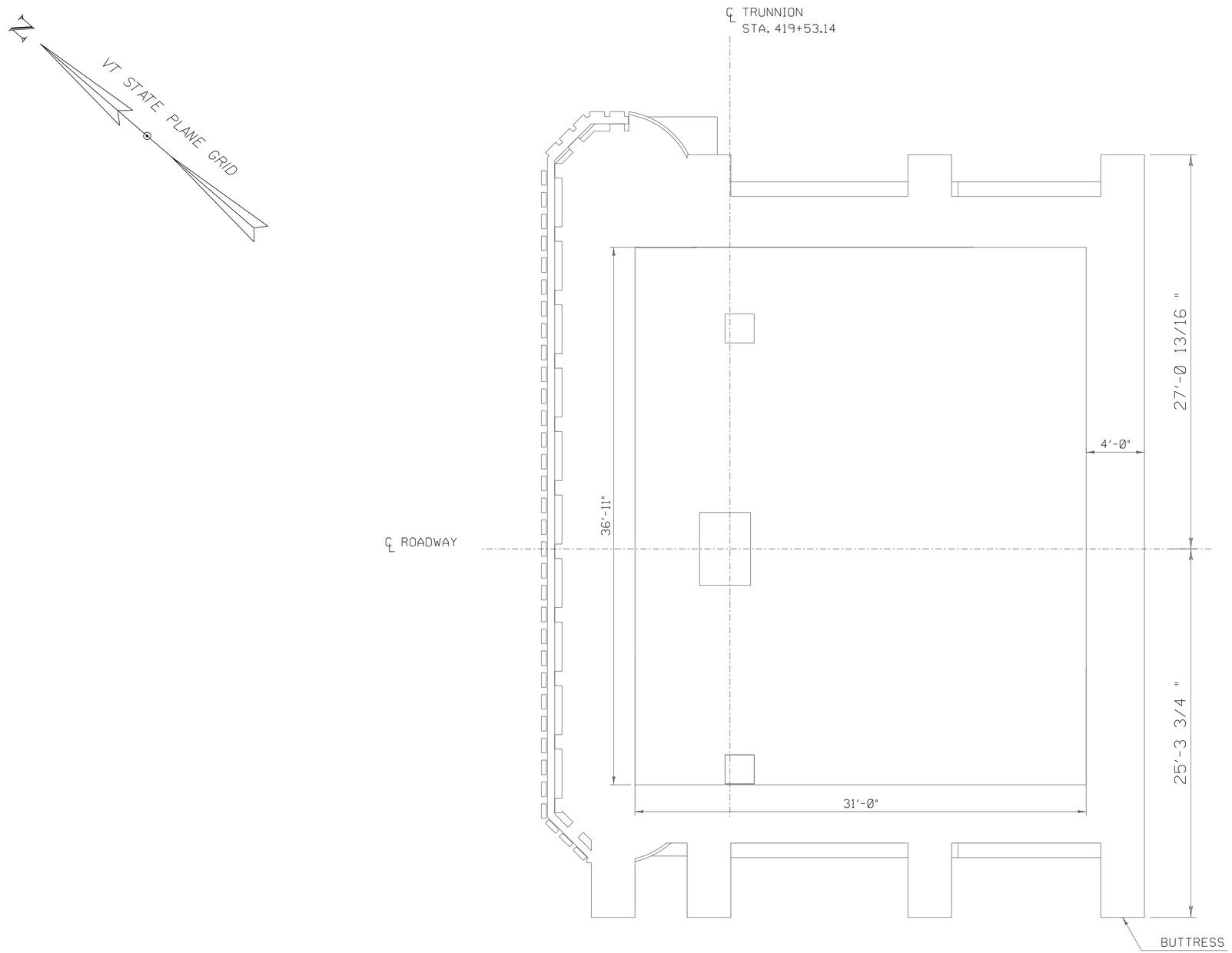

PIER 2 PLAN AT EL. 87.32

SCALE ¼" = 1'-0"

4' 0 4'

PROGRESS PLANS

NOTE

1. EXISTING FENDER SHOWN

PROJECT NAME: NORTH HERO GRAND ISLE BRIDGE	
PROJECT NUMBER: BHF 028-1(26)	
FILE NAME: z12b142p2level3.dgn	PLOT DATE: 4/25/2016
PROJECT LEADER: T. FRENCH	DRAWN BY: S. SANTRICH
DESIGNED BY: H. PROTIN	CHECKED BY: P. DAVIS
PIER 2 PLAN AT EL.87.32	SHEET 69 OF 196

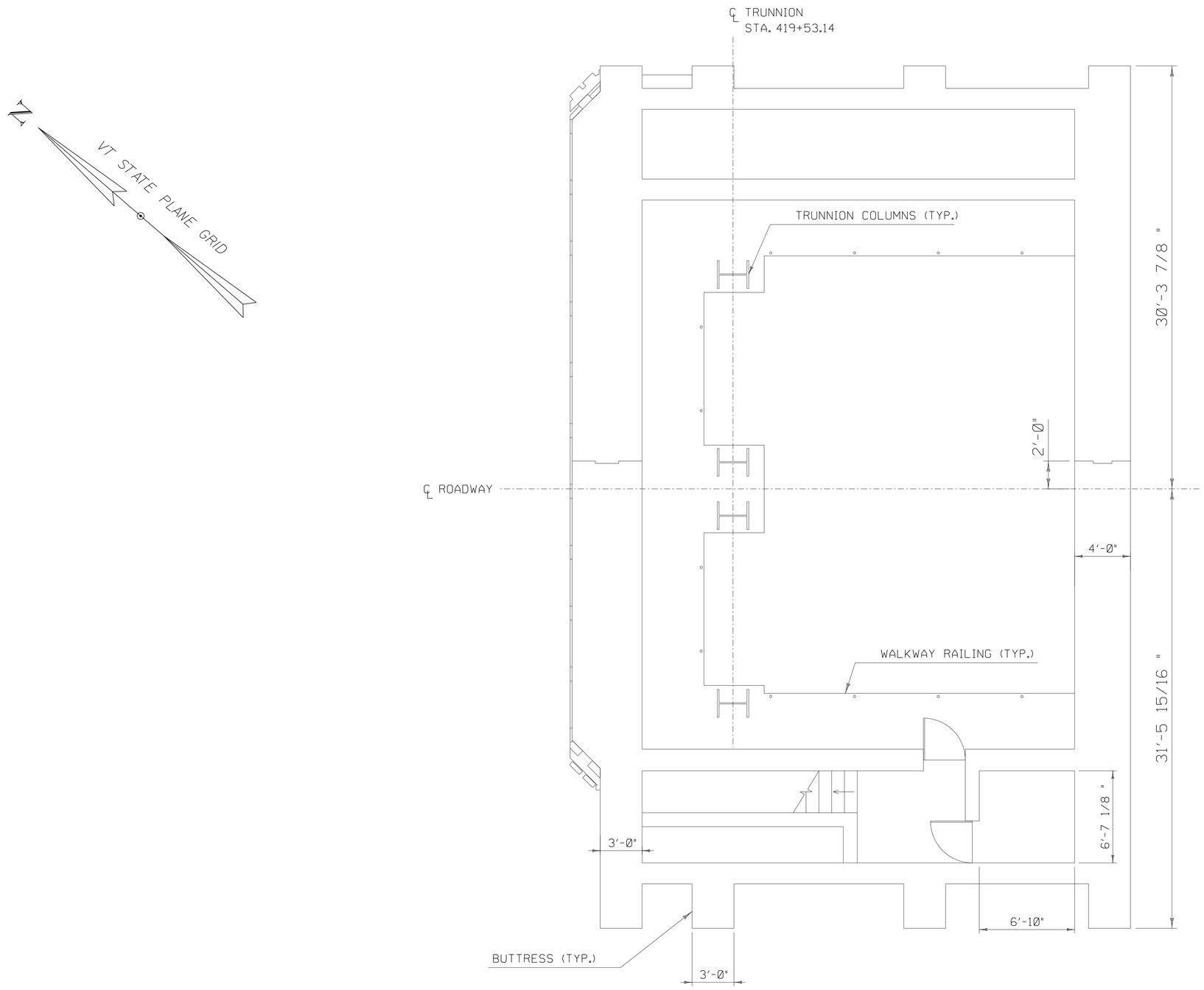

PIER 2 PLAN AT EL. 98.99

SCALE 1/4" = 1'-0"

4' 0 4'

NOTE

1. EXISTING FENDER SHOWN

PROGRESS PLANS

PROJECT NAME: NORTH HERO GRAND ISLE BRIDGE	
PROJECT NUMBER: BHF 028-1(26)	
FILE NAME: z12b142P2level2.dgn	PLOT DATE: 4/25/2016
PROJECT LEADER: T. FRENCH	DRAWN BY: S. SANTRICH
DESIGNED BY: H. PROTIN	CHECKED BY: P. DAVIS
PIER 2 PLAN AT EL.98.99	SHEET 70 OF 196

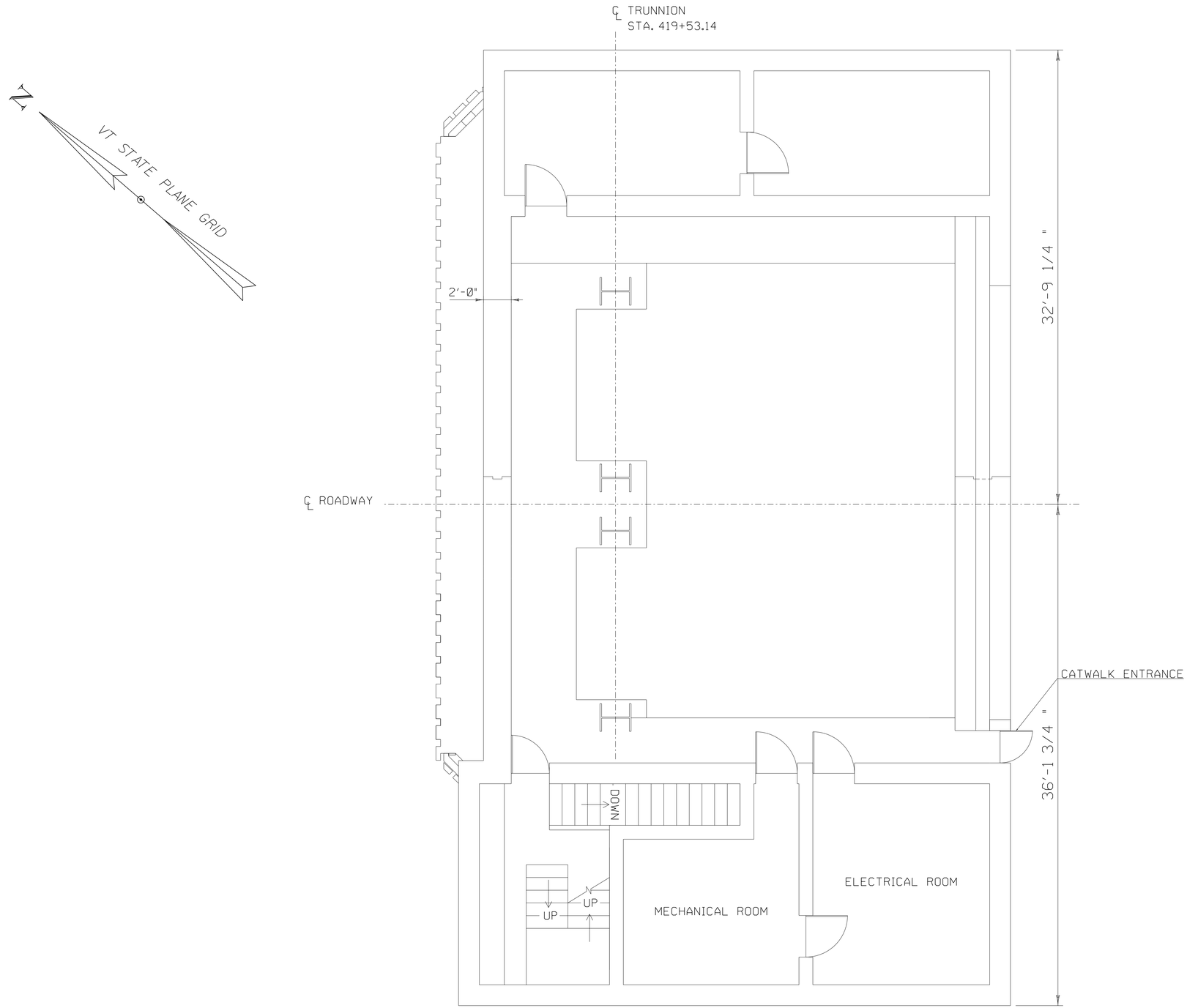

PIER 2 PLAN AT EL. 108.32

SCALE 1/4" = 1'-0"

4' 0 4'

NOTE

1. EXISTING FENDER SHOWN

PROGRESS PLANS

PROJECT NAME: NORTH HERO GRAND ISLE BRIDGE	
PROJECT NUMBER: BHF 028-1(26)	
FILE NAME: z12b142p2level1.dgn	PLOT DATE: 4/25/2016
PROJECT LEADER: T. FRENCH	DRAWN BY: S. SANTRICH
DESIGNED BY: H. PROTIN	CHECKED BY: P. DAVIS
PIER 2 PLAN AT EL.108.32	SHEET 71 OF 196

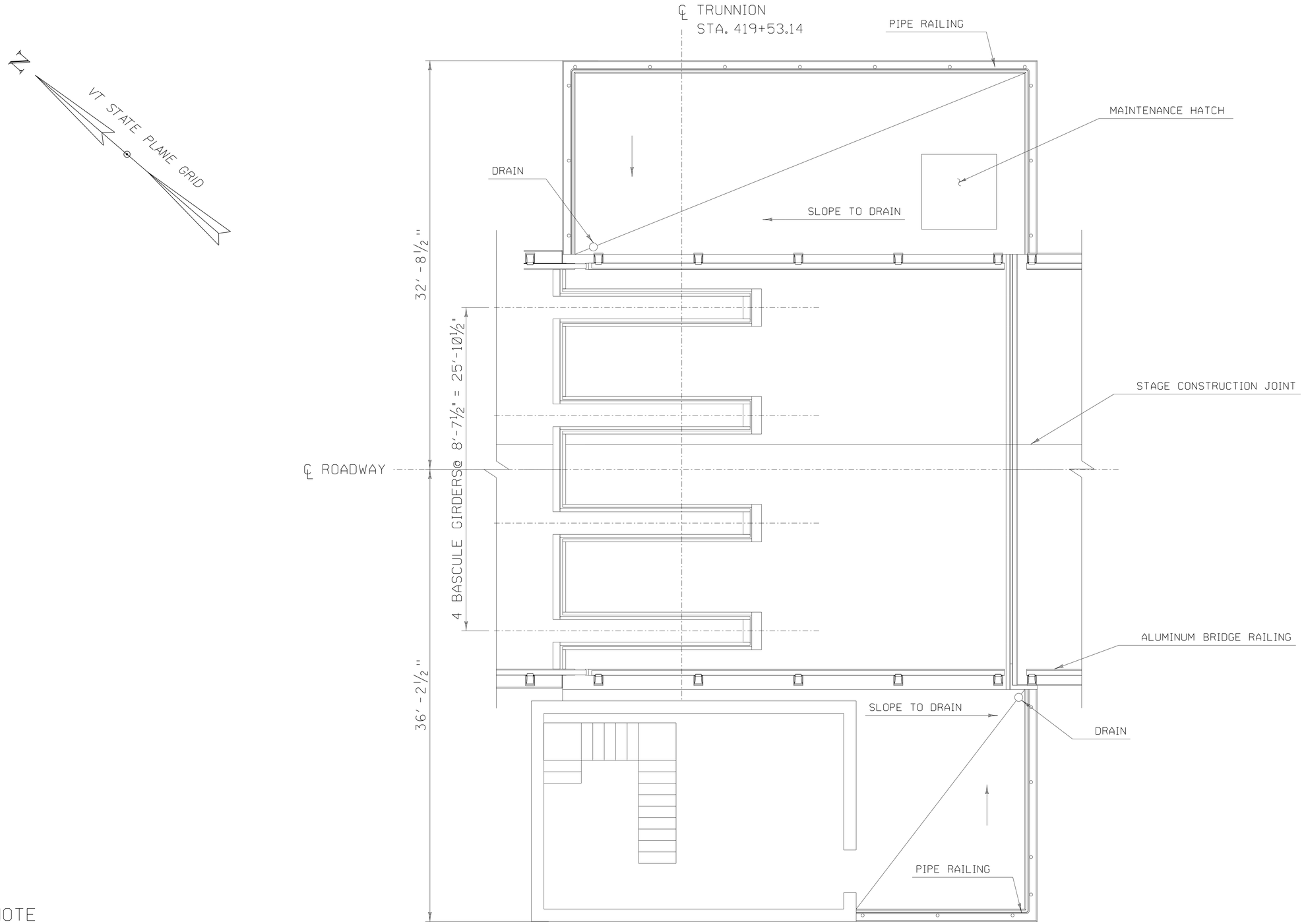

NOTE

1. EXISTING FENDER SHOWN.

PIER 2 PLAN AT EL. 118.82

SCALE ¼" = 1'-0"

4' 0 4'

PROGRESS PLANS

PROJECT NAME: NORTH HERO GRAND ISLE BRIDGE	
PROJECT NUMBER: BHF 028-1(26)	
FILE NAME: zl2bl42p2level0.dgn	PLOT DATE: 4/25/2016
PROJECT LEADER: T. FRENCH	DRAWN BY: S. SANTRICH
DESIGNED BY: H. PROTIN	CHECKED BY: P. DAVIS
PIER 2 PLAN AT EL. 118.82	SHEET 72 OF 196

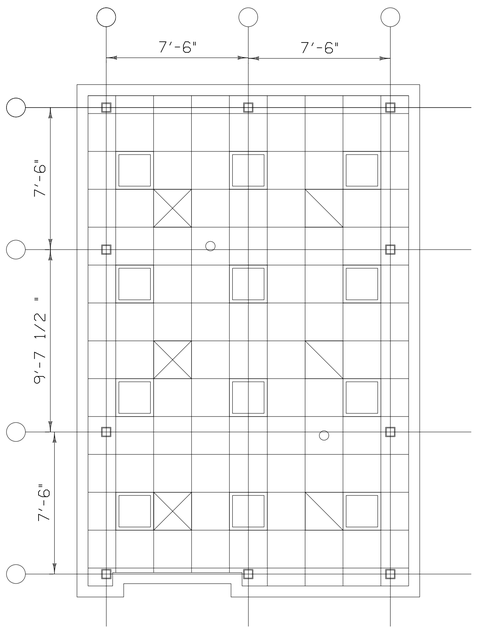

REFLECTED CEILING PLAN

SCALE ¼" = 1'-0"

4' 0 4'

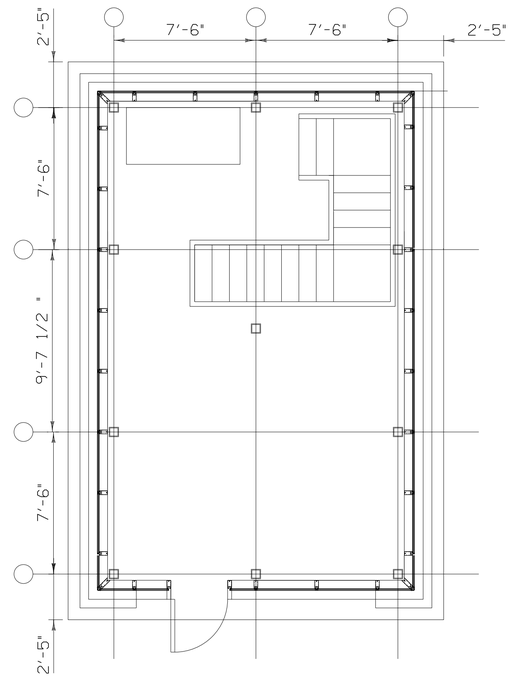

CONTROL HOUSE FLOOR PLAN

SCALE ¼" = 1'-0"

4' 0 4'

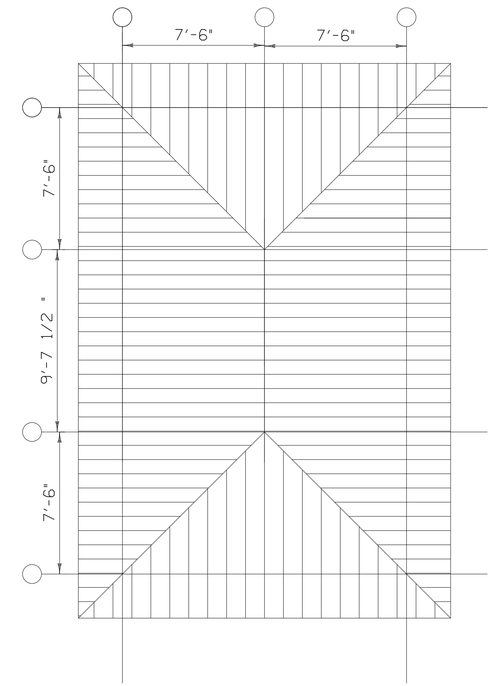

ROOF PLAN

SCALE ¼" = 1'-0"

4' 0 4'

PROGRESS PLANS

PROJECT NAME: NORTH HERO GRAND ISLE BRIDGE

PROJECT NUMBER: BHF 028-1(26)

FILE NAME: z12b142_ch.dgn
PROJECT LEADER: T. FRENCH
DESIGNED BY: H. PROTIN
CONTROL HOUSE PLAN VIEWS

PLOT DATE: 4/25/2016
DRAWN BY: S. SANTRICH
CHECKED BY: J. PESA
SHEET 73 OF 196

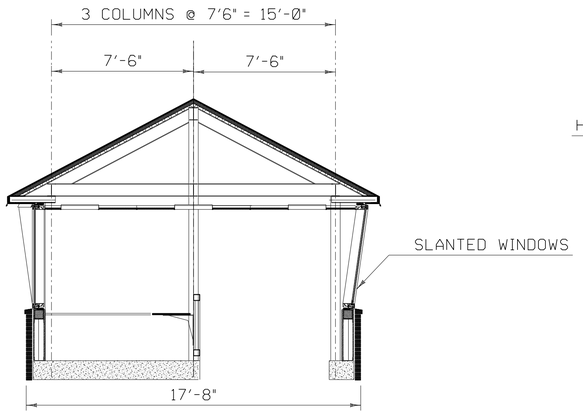

TRANSVER SECTION

SCALE ¼" = 1'-0"

4' 0 4'

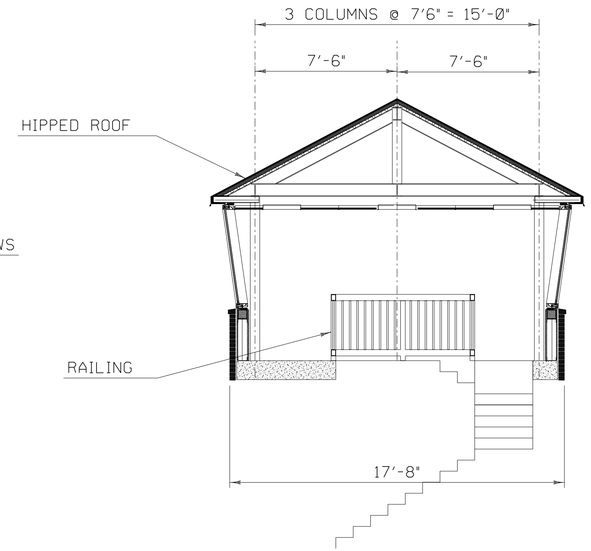

SECTION FACING WATER

SCALE ¼" = 1'-0"

4' 0 4'

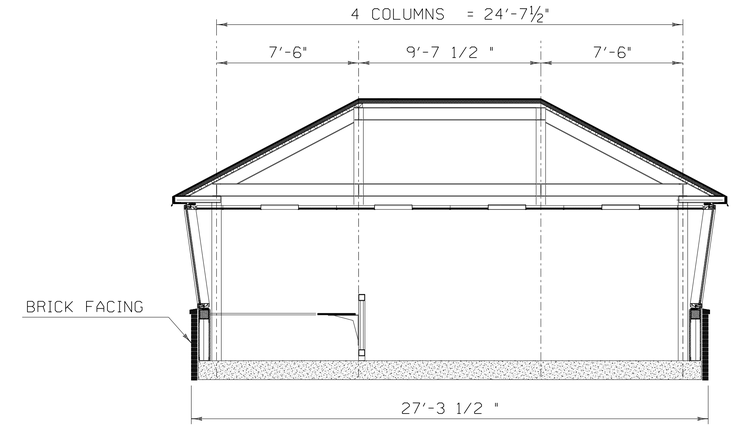

LONGITUDINAL SECTION

SCALE ¼" = 1'-0"

4' 0 4'

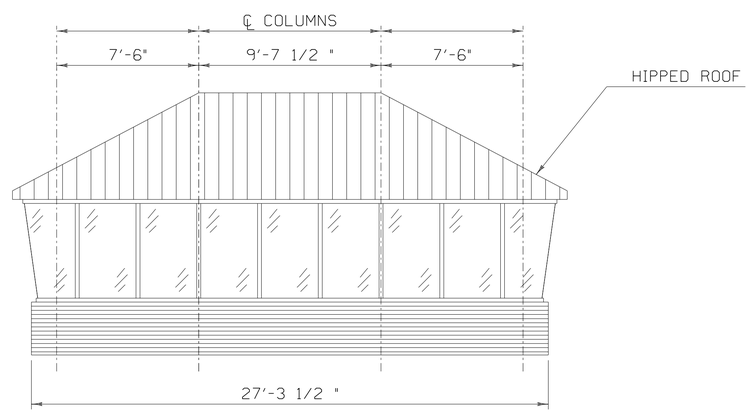

SIDE VIEW

SCALE ¼" = 1'-0"

4' 0 4'

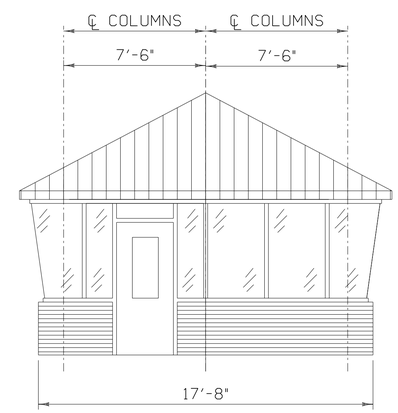

FRONT VIEW

SCALE ¼" = 1'-0"

4' 0 4'

PROGRESS PLANS

PROJECT NAME: NORTH HERO GRAND ISLE BRIDGE

PROJECT NUMBER: BHF 028-1(26)

FILE NAME: z12b142_ch.dgn

PROJECT LEADER: T. FRENCH

DESIGNED BY: H. PROTIN

CONTROL HOUSE SECTIONS

PLOT DATE: 4/25/2016

DRAWN BY: S. SANTRICH

CHECKED BY: P. DAVIS

SHEET 74 OF 196

WEST APPROACH SPAN FRAMING PLAN

SCALE 1" = 10'-0"

EAST APPROACH SPAN FRAMING PLAN

SCALE 1" = 10'-0"

PROGRESS PLANS

PROJECT NAME: NORTH HERO GRAND ISLE BRIDGE	
PROJECT NUMBER: BHF 028-1(26)	
FILE NAME: zi2bl42frameapp.dgn	PLOT DATE: 4/25/2016
PROJECT LEADER: T. FRENCH	DRAWN BY: K. KRETSCH
DESIGNED BY: P. LEFEBVRE	CHECKED BY: P. LEFEBVRE
APPROACH SPAN FRAMING PLAN	SHEET 75 OF 196

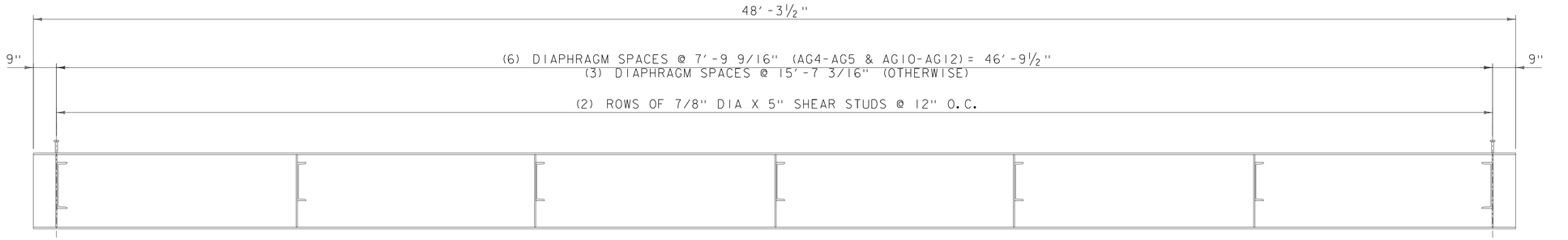

NOTE:
SEE STRUCTURES DETAIL SHEET SD-601.00
FOR ADDITIONAL STRUCTURAL STEEL DETAILS

GIRDER ELEVATION

SCALE: 1" = 1'-0"

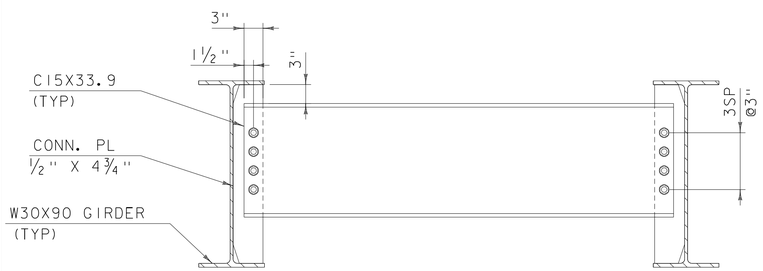

INTERMEDIATE DIAPHRAGM D1

SCALE: 1" = 1'-0"

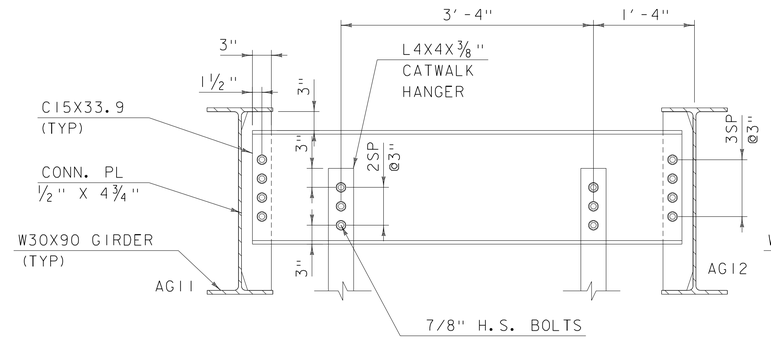

INTERMEDIATE DIAPHRAGM D2

SCALE: 1" = 1'-0"

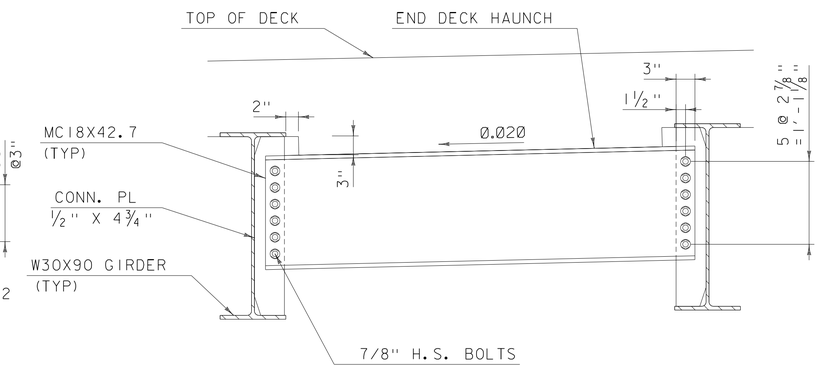

END DIAPHRAGM E1

SCALE: 1" = 1'-0"

NOTE: INTERMEDIATE DIAPHRAGM CONNECTIONS
SHALL BE PER STRUCTURES DETAIL SD-602.00
EXCEPT AS SHOWN

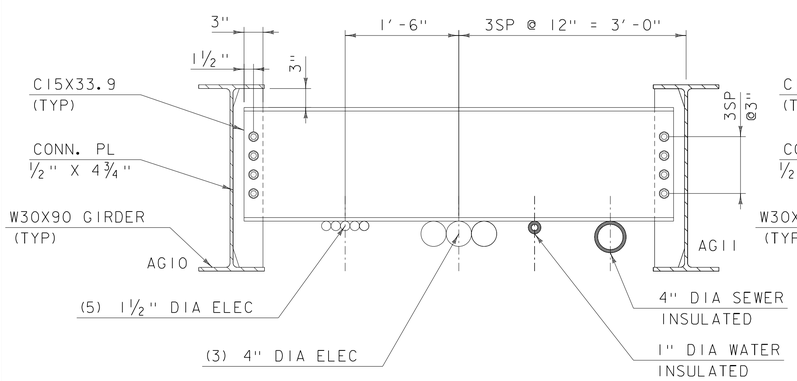

INTERMEDIATE DIAPHRAGM D3

SCALE: 1" = 1'-0"

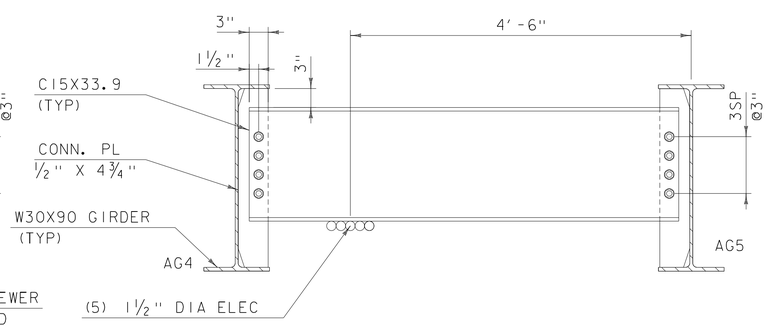

INTERMEDIATE DIAPHRAGM D4

SCALE: 1" = 1'-0"

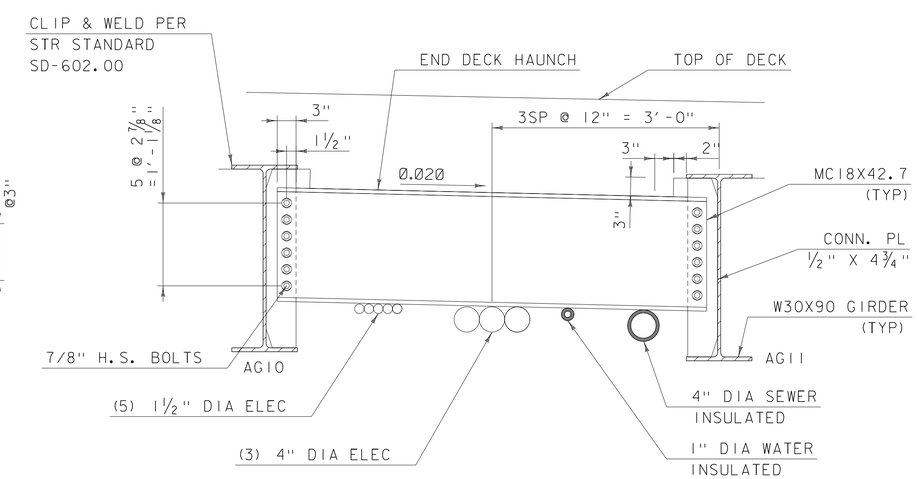

END DIAPHRAGM E2/E3

SCALE: 1" = 1'-0"

PROGRESS PLANS

HDR

PROJECT NAME:	NORTH HERO GRAND ISLE BRIDGE
PROJECT NUMBER:	BHF 028-1(26)

FILE NAME: zl2bl42apgirdet.dgn	PLOT DATE: 4/25/2016
PROJECT LEADER: T. FRENCH	DRAWN BY: P. LEFEBVRE
DESIGNED BY: P. LEFEBVRE	CHECKED BY: J. MURPHY
APPROACH SPAN GIRDER DETAILS	SHEET 76 OF 196

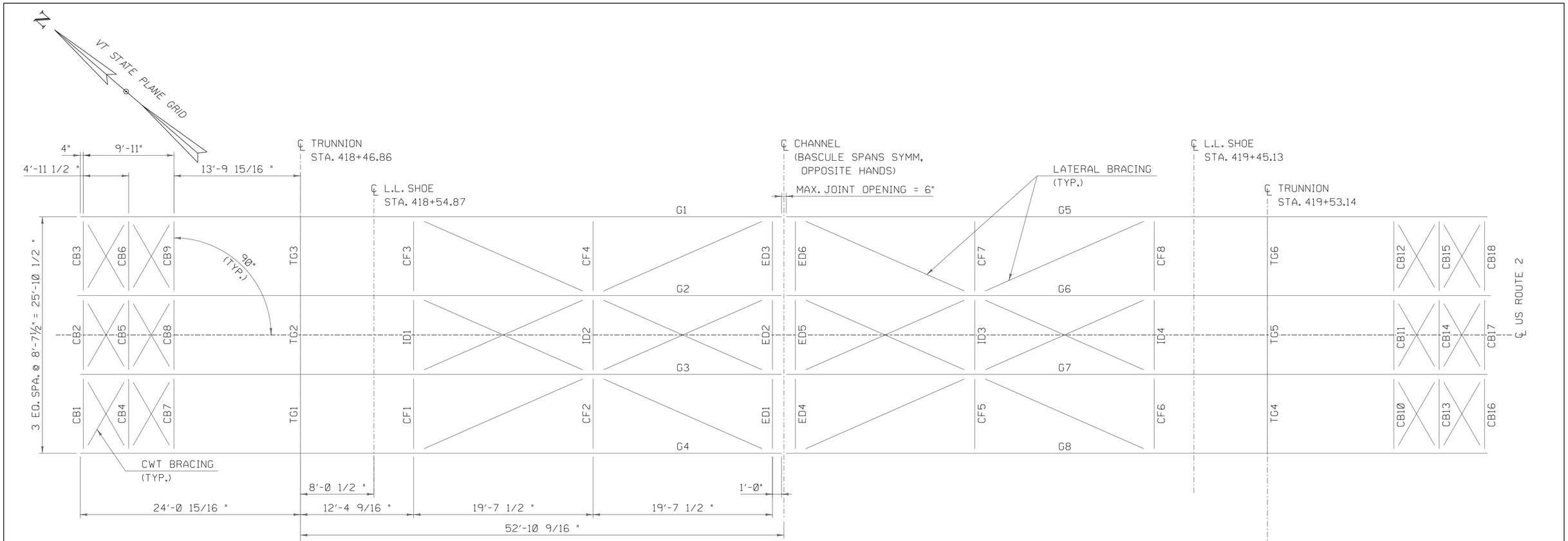

BASCULE SPAN FRAMING PLAN

SCALE 3/16" = 1'-0"
5.33' 0 5.33'

COUNTERWEIGHT SPAN FRAMING PLAN

SCALE 3/16" = 1'-0"
5.33' 0 5.33'

COUNTERWEIGHT SPAN FRAMING PLAN

SCALE 3/16" = 1'-0"
5.33' 0 5.33'

PROGRESS PLANS

HDR

PROJECT NAME: NORTH HERO GRAND ISLE BRIDGE	
PROJECT NUMBER: BHF 028-1(26)	
FILE NAME: z12b142framemov.dgn	PLOT DATE: 4/25/2016
PROJECT LEADER: T. FRENCH	DRAWN BY: S. SANTRICH
DESIGNED BY: H. PROTIN	CHECKED BY: P. DAVIS
BASCULE SPAN FRAMING PLAN	SHEET ~~43~~ 77 OF 196

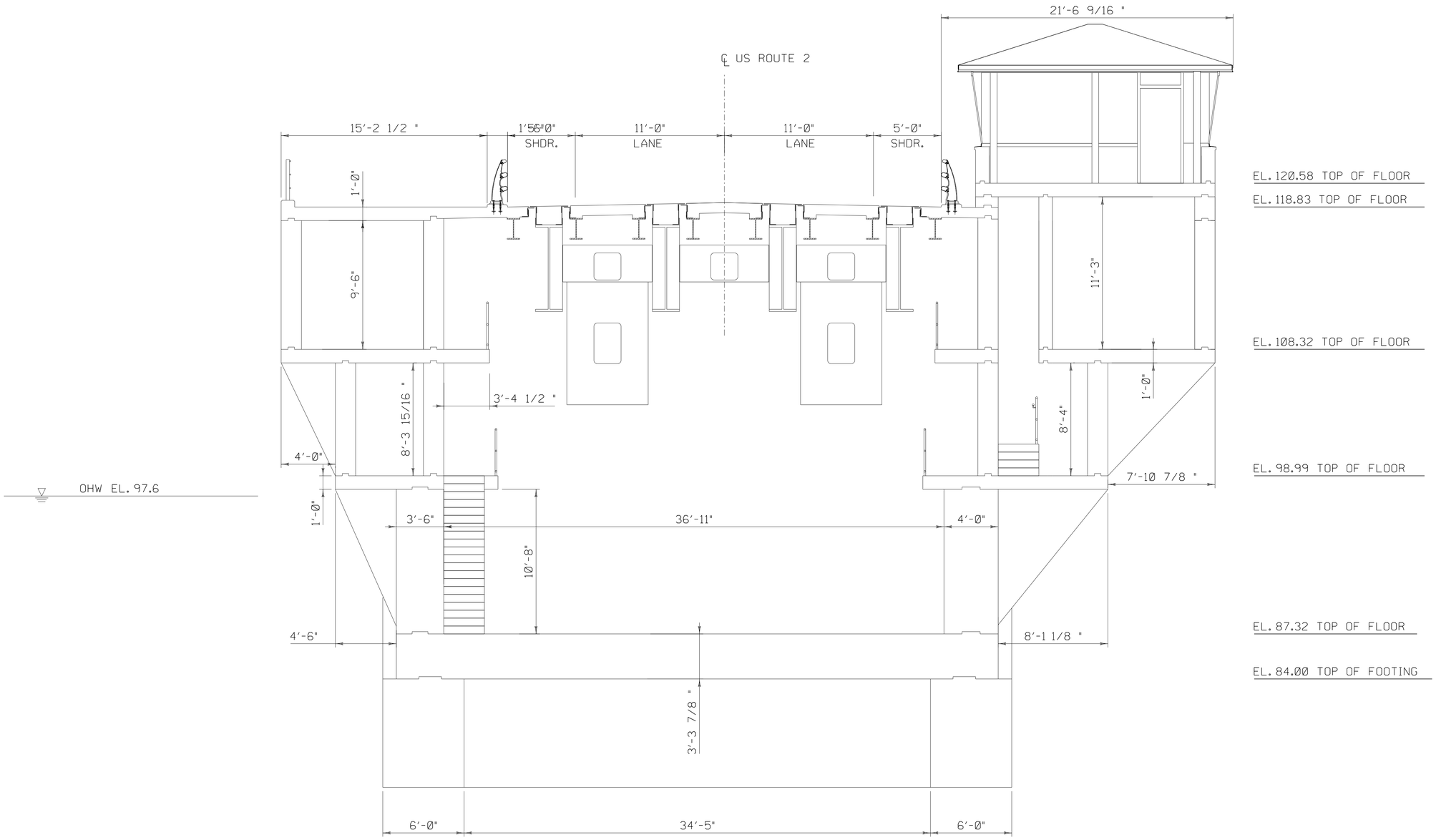

TYPICAL TRANSVERSE SECTION
AT BASCULE PIER

SCALE ¼" = 1'-0"

4' 0 4'

PROGRESS PLANS

PROJECT NAME: NORTH HERO GRAND ISLE BRIDGE	
PROJECT NUMBER: BHF 028-1(26)	
FILE NAME: z12b142pierxs2.dgn	PLOT DATE: 4/25/2016
PROJECT LEADER: T. FRENCH	DRAWN BY: S. SANTRICH
DESIGNED BY: H. PROTIN	CHECKED BY: P. DAVIS
BASCULE SPAN TRANSVERSE SECTION	SHEET 78 OF 196

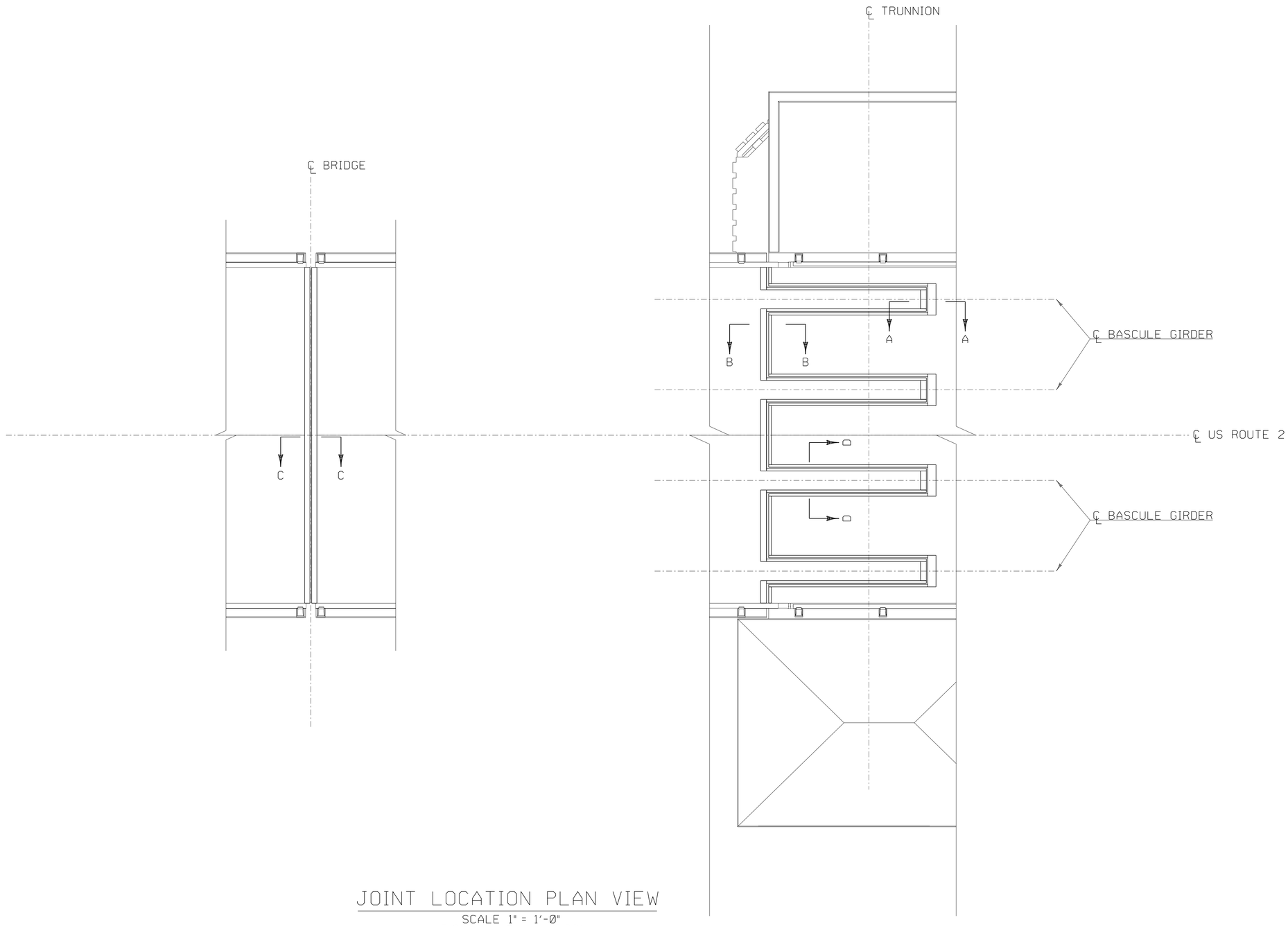

JOINT LOCATION PLAN VIEW

SCALE 1" = 1'-0"

5.33' 0 5.33'

PROGRESS PLANS

PROJECT NAME: NORTH HERO GRAND ISLE BRIDGE

PROJECT NUMBER: BHF 028-1(26)

FILE NAME: z12b142jointdt1.dgn

PROJECT LEADER: T. FRENCH

DESIGNED BY: H. PROTIN

BASCULE JOINT DETAILS 1

PLOT DATE: 4/25/2016

DRAWN BY: S. SANTRICH

CHECKED BY: P. DAVIS

SHEET 79 OF 196

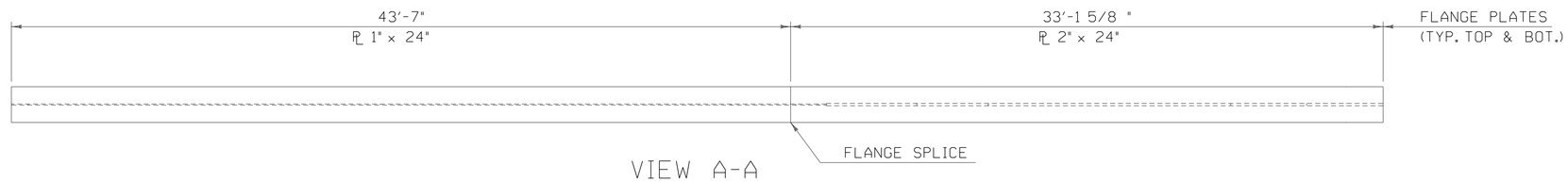

VIEW A-A

SCALE 1/4" = 1'-0"

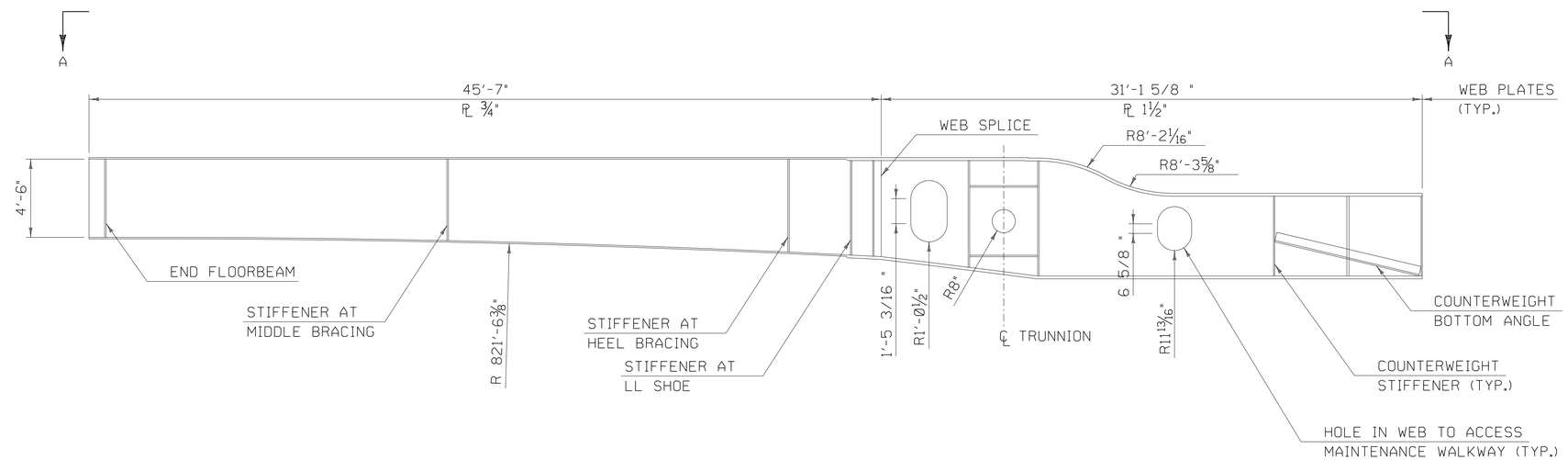

EXTERIOR BASCULE GIRDER ELEVATION

SCALE 1/4" = 1'-0"

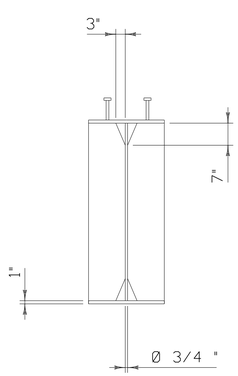

GIRDER SECTION AT MIDDLE BRACING

SCALE 1/2" = 1'-0"

PROGRESS PLANS

PROJECT NAME: NORTH HERO GRAND ISLE BRIDGE	
PROJECT NUMBER: BHF 028-1(26)	
FILE NAME: z12b142girdmov1.dgn	PLOT DATE: 4/25/2016
PROJECT LEADER: T. FRENCH	DRAWN BY: K. PATEL
DESIGNED BY: H. PROTIN	CHECKED BY: P. DAVIS
BASCULE SPAN GIRDER DETAILS - 1 OF 2	SHEET ~~46~~ 81 OF 196

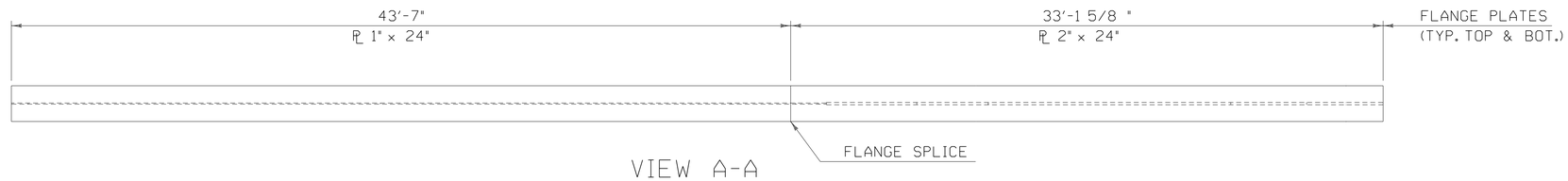

VIEW A-A

SCALE 1/4" = 1'-0"

4' 0 4'

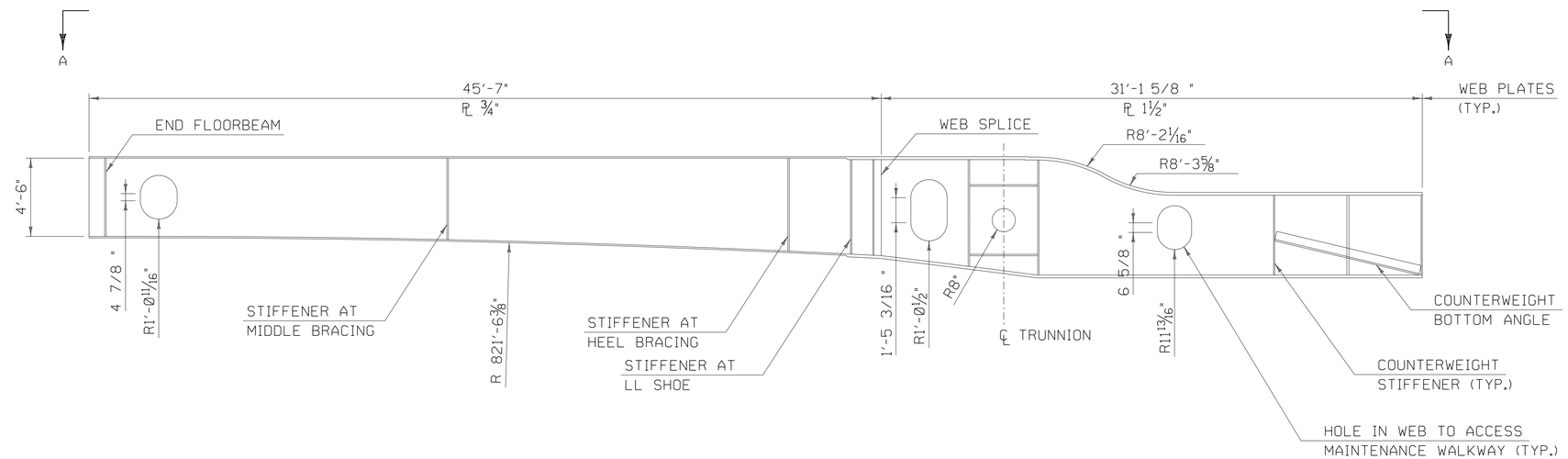

INTERIOR BASCULE GIRDER ELEVATION

SCALE 1/4" = 1'-0"

4' 0 4'

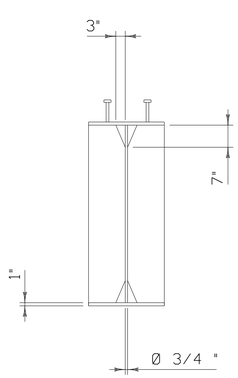

GIRDER SECTION AT MIDDLE BRACING

SCALE 1/2" = 1'-0"

2' 0 2'

PROGRESS PLANS

PROJECT NAME: NORTH HERO GRAND ISLE BRIDGE	
PROJECT NUMBER: BHF 028-1(26)	
FILE NAME: z12b142bascgird.dgn	PLOT DATE: 4/25/2016
PROJECT LEADER: T. FRENCH	DRAWN BY: K. PATEL
DESIGNED BY: H. PROTIN	CHECKED BY: P. DAVIS
BASCULE SPAN GIRDER DETAILS - 2 OF 2	SHEET ~~47~~ 82 OF 196

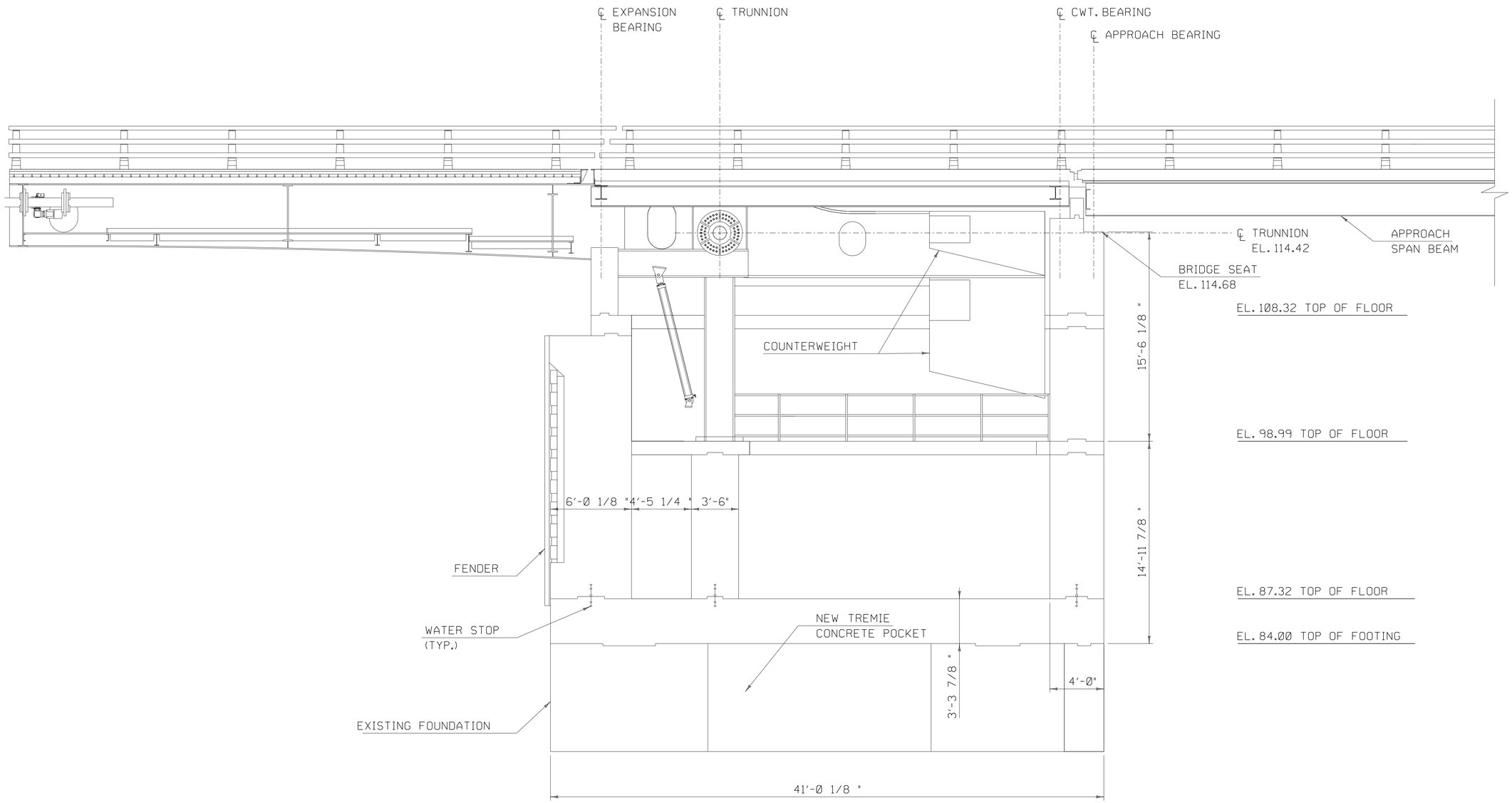

TYPICAL LONGITUDINAL SECTION AT BASCULE PIER

SCALE ¼" = 1'-0"

4' 0 4'

PROGRESS PLANS

PROJECT NAME: NORTH HERO GRAND ISLE BRIDGE
PROJECT NUMBER: BHF 028-1(26)

FILE NAME: z12b142pierxs1.dgn
PROJECT LEADER: T. FRENCH
DESIGNED BY: H. PROTIN
BASCULE SPAN LONGITUDINAL SECTION

PLOT DATE: 4/25/2016
DRAWN BY: S. SANTRICH
CHECKED BY: P. DAVIS
SHEET ~~44~~ 83 OF 196

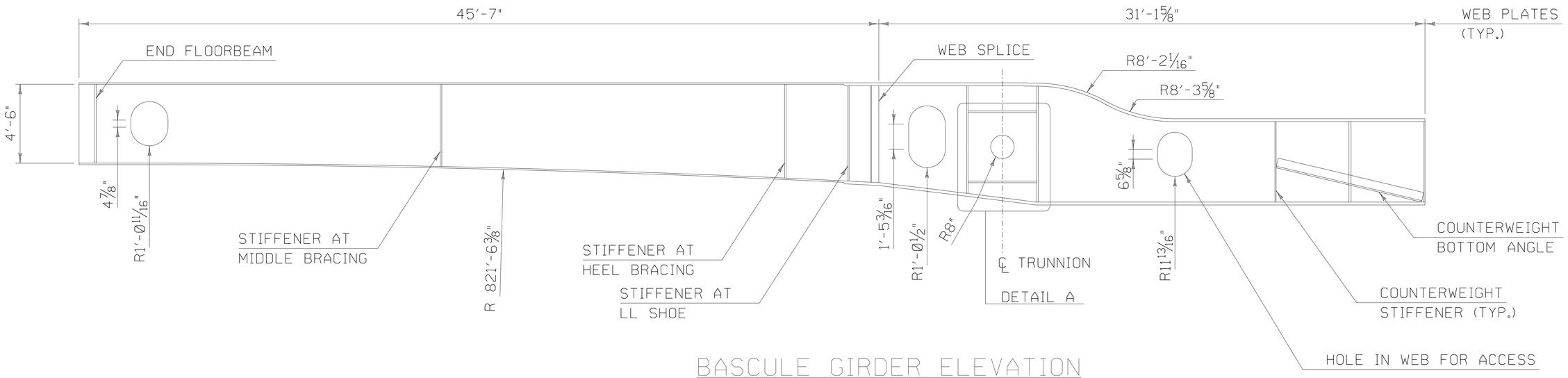

BASCULE GIRDER ELEVATION

SCALE 1" = 3'-Ø"

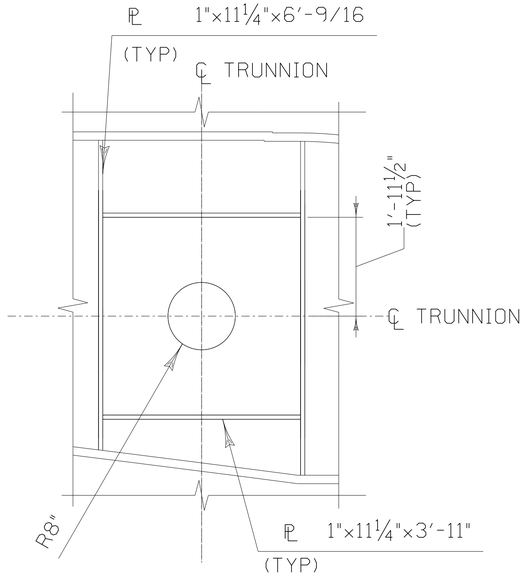

DETAIL A

SCALE 1" = 1'-6"

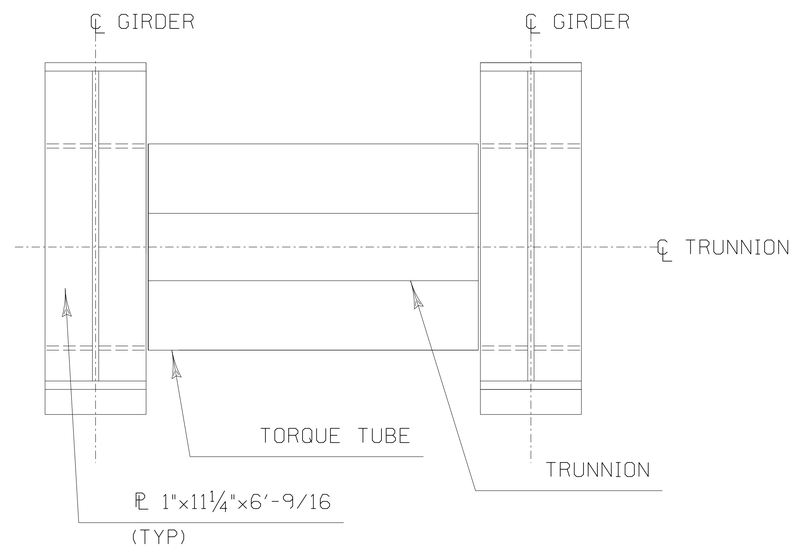

SECTION A

SCALE 1" = 1'-6"

PROGRESS PLANS

PROJECT NAME: NORTH HERO GRAND ISLE BRIDGE	
PROJECT NUMBER: BHF 028-1(26)	
FILE NAME: z12b142torquet.dgn	PLOT DATE: 4/25/2016
PROJECT LEADER: T. FRENCH	DRAWN BY: T. BRENNAN
DESIGNED BY: H. PROTIN	CHECKED BY: P. DAVIS
TORQUE TUBE DETAILS	SHEET 84 OF 196

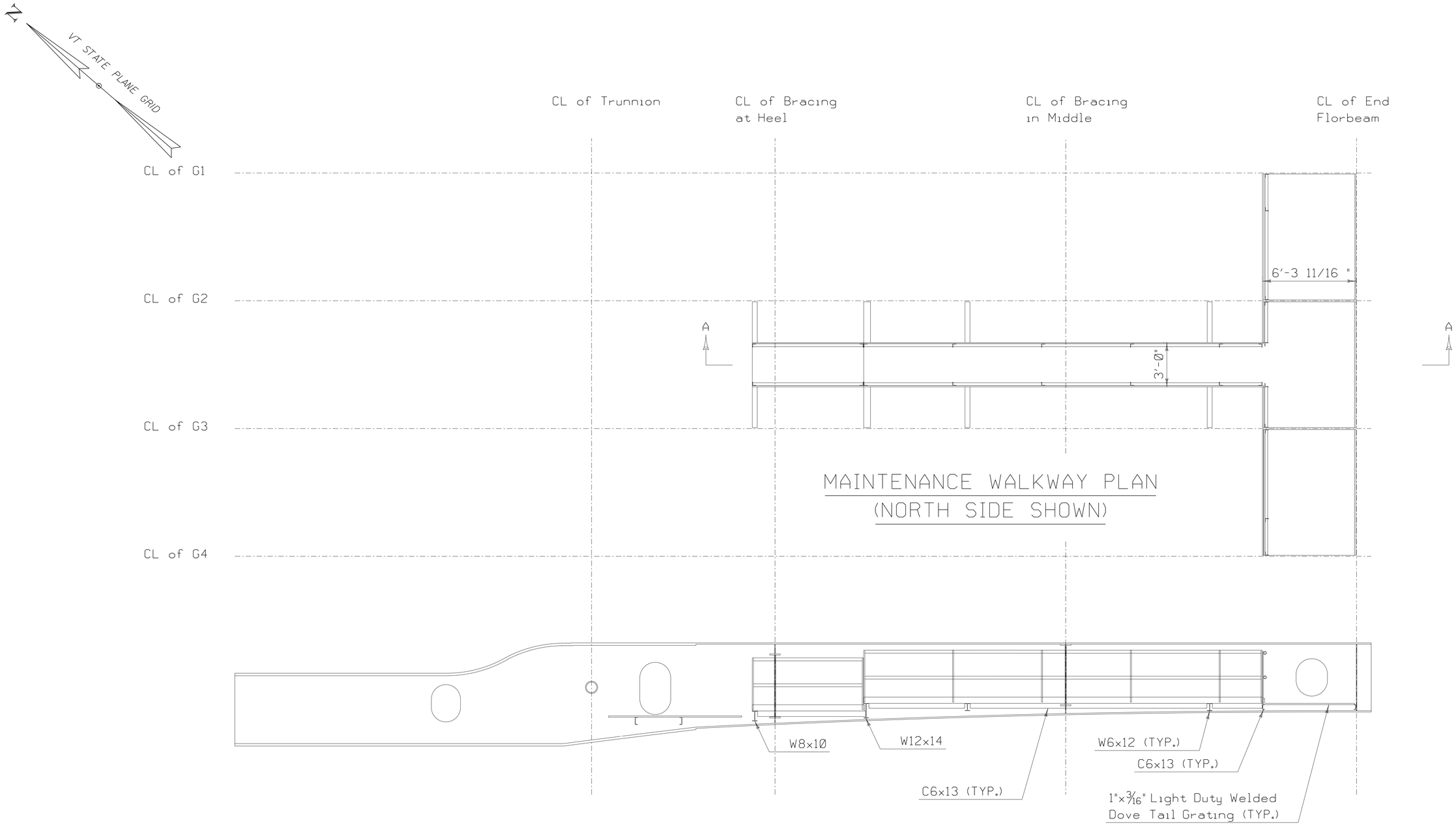

MAINTENANCE WALKWAY PLAN
(NORTH SIDE SHOWN)

SECTION A-A

SCALE 1/3" = 1'-0"

3' 0 3'

PROGRESS PLANS

PROJECT NAME: NORTH HERO GRAND ISLE BRIDGE
PROJECT NUMBER: BHF 028-1(26)

FILE NAME: z12b142mwalkway.dgn
PROJECT LEADER: T. FRENCH
DESIGNED BY: H. PROTIN
MAINTENANCE WALKWAY PLAN & ELE

PLOT DATE: 4/25/2016
DRAWN BY: K. PATEL
CHECKED BY: P. DAVIS
SHEET 85 OF 196

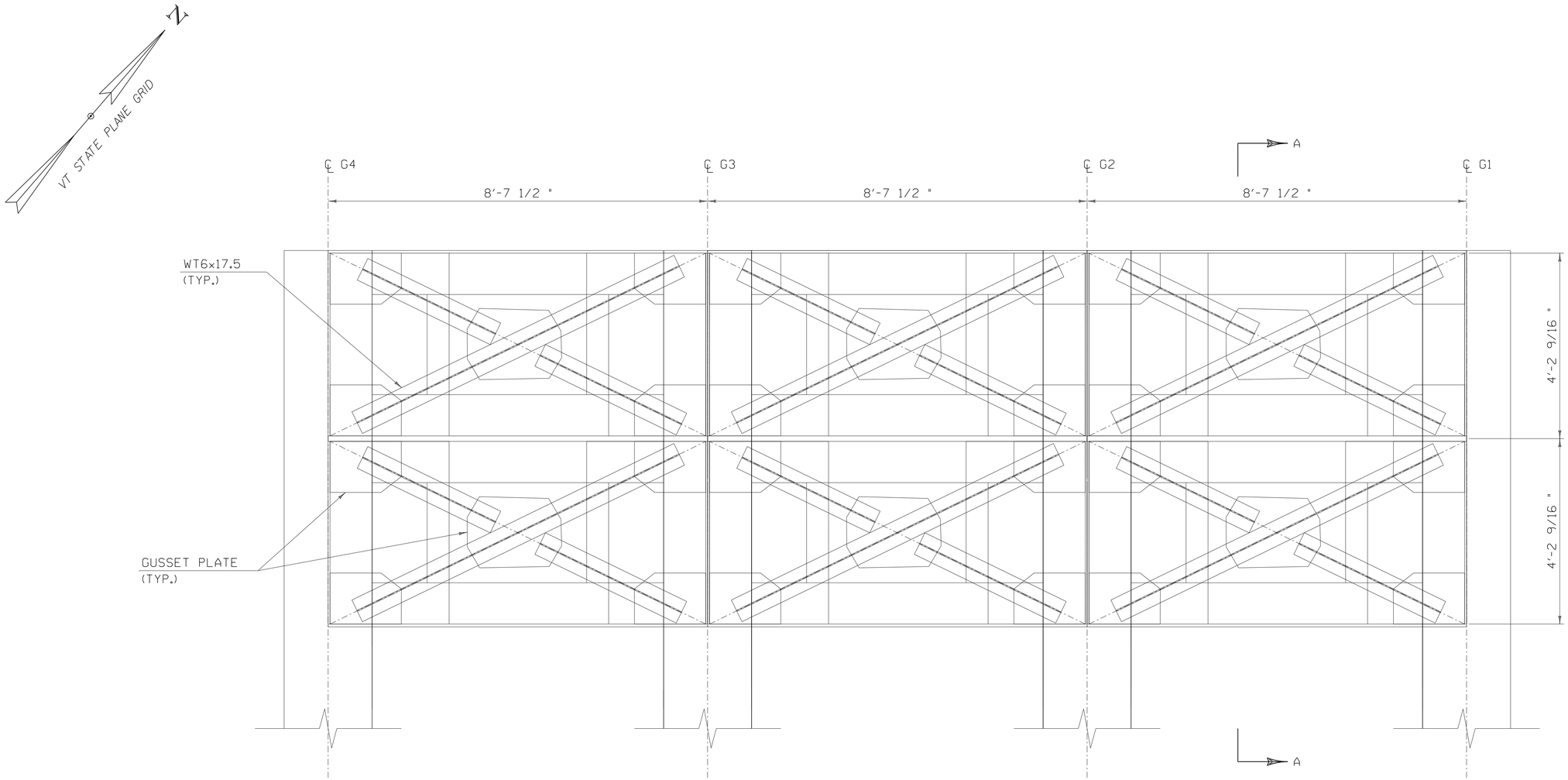

PLAN - UPPER COUNTERWEIGHT

SCALE 3/4" = 1'-0"

1.33' 0 1.33'

PROGRESS PLANS

NOTES

1. FOR SECTION A-A, SEE SHEET 49

HDR

PROJECT NAME: NORTH HERO GRAND ISLE BRIDGE	
PROJECT NUMBER: BHF 028-1(26)	
FILE NAME: z12b142cwtplan.dgn	PLOT DATE: 4/25/2016
PROJECT LEADER: T. FRENCH	DRAWN BY: K. PATEL
DESIGNED BY: H. PROTIN	CHECKED BY: P. DAVIS
BASCULE SPAN COUNTERWEIGHT PLAN	SHEET ~~48~~ 86 OF 196

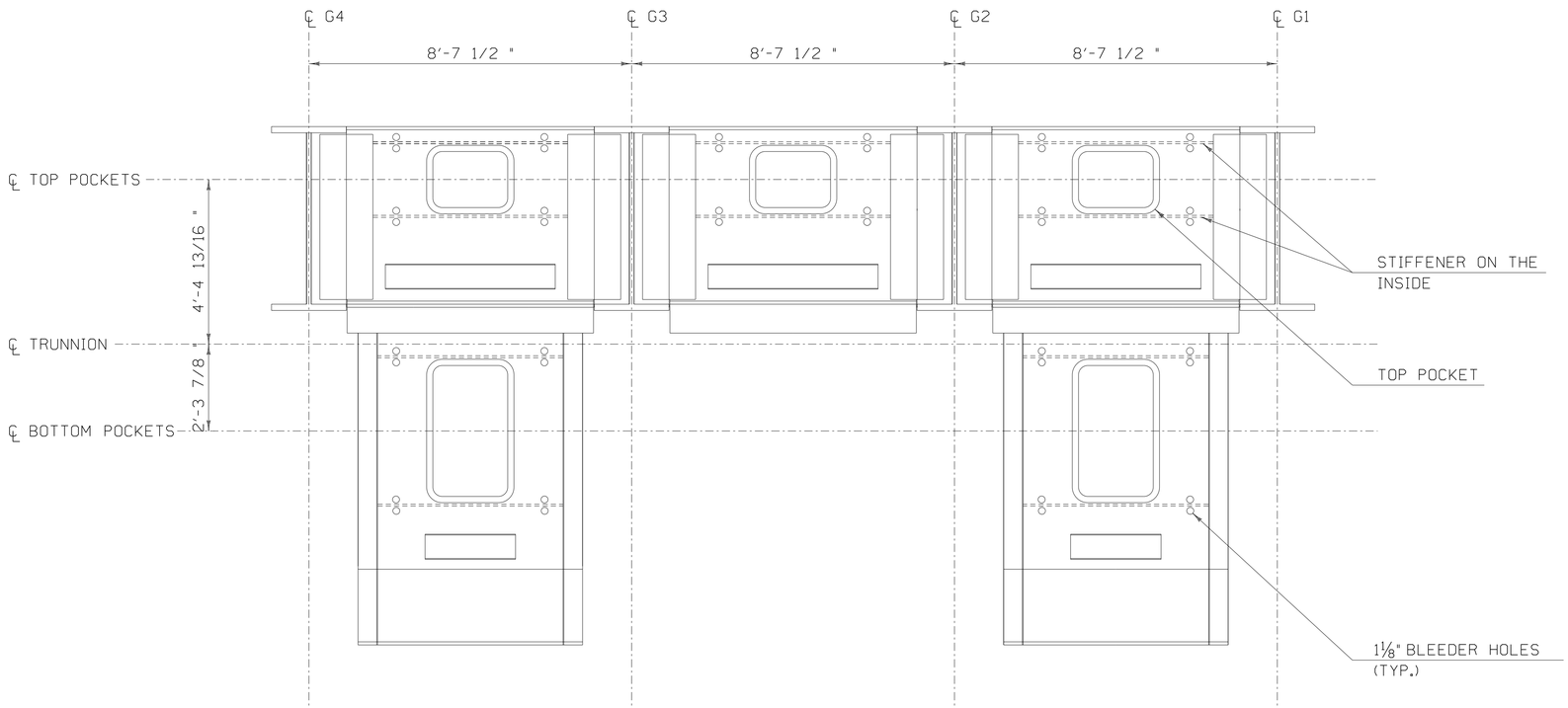

COUNTERWEIGHT ELEVATION

SCALE ½" = 1'-0"

2' 0 2'

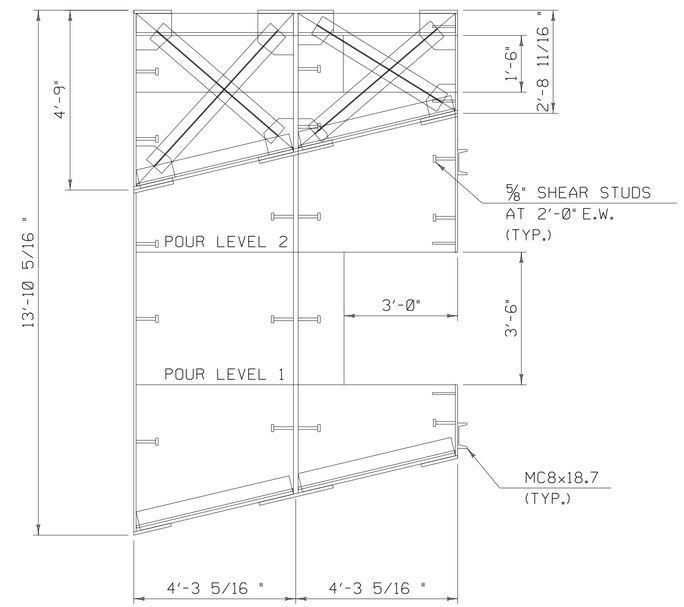

SECTION A-A

SCALE ½" = 1'-0"

2' 0 2'

NOTES

1. WEST COUNTERWEIGHT SHOWN, EAST COUNTERWEIGHT OPPOSITE HAND
2. FOR LOCATION OF SECTION A-A, SEE SHEET 48

PROGRESS PLANS

HDR

PROJECT NAME: NORTH HERO GRAND ISLE BRIDGE	
PROJECT NUMBER: BHF 028-1(26)	
FILE NAME: z12b142cwtxs.dgn	PLOT DATE: 4/25/2016
PROJECT LEADER: T. FRENCH	DRAWN BY: K. PATEL
DESIGNED BY: H. PROTIN	CHECKED BY: P. DAVIS
BASCULE SPAN COUNTERWEIGHT SECTIONS	SHEET ~~49~~ 87 OF 196

BALANCE TABLE					
FORWARD OF TRUNNION:					
	DEAD LOAD (kip)	X-BAR (ft)	Y-BAR (ft)	Mx (kip-ft)	My (kip-ft)
GIRDERS	37.15	23.15	0.99	860.04	36.70
DECK	113.66	31.13	4.76	3538.82	541.56
DECK JOINTS (FORWARD TO TRUNNION)	5.19	4.81	3.93	25.00	20.42
HAUNCH (FORWARD TO TRUNNION)	20.93	26.16	3.23	547.56	67.67
END FLOORBEAM	4.32	51.63	1.32	223.22	5.69
CONNECTION STIFFENERS (AT HEEL)	1.35	12.50	0.88	16.90	1.19
CONNECTION STIFFENERS (AT MIDDLE)	1.18	32.13	1.22	37.89	1.44
MAINTENANCE WALKWAY AT CENTER	4.49	25.38	0.00	113.99	0.00
MAINTENANCE WALKWAY SUPPORT AT CENTER	1.15	25.38	-0.42	29.16	-0.48
MAINTENANCE WALKWAY AT SHEAR LOCKS	2.81	5.00	0.00	14.06	0.00
MAINTENANCE WALKWAT SUPPPORT AT SHEAR LOCKS	0.82	5.00	-0.42	4.12	-0.34
ROADWAY BARRIER	0.81	31.13	6.01	25.30	4.88
SPAN LOCK MACHINERY (ASSUMED)	5.00	47.63	2.07	238.17	10.34
DIAPHRAGM (AT HEEL)	0.40	12.50	2.90	5.03	1.17
DIAPHRAGM (AT MIDDLE)	0.40	32.13	2.90	12.92	1.17
INTERIOR BRACING (AT HEEL)	2.54	12.50	0.96	31.71	2.44
INTERIOR BRACING (AT MIDDLE)	2.28	32.13	1.31	73.25	2.98
EXTERIOR BRACING (AT HEEL)	1.14	12.50	-0.49	14.29	-0.56
EXTERIOR BRACING (AT MIDDLE)	1.14	32.13	-0.26	36.73	-0.30
Σ	206.79	28.28	3.37	5848.17	695.97
REAR OF TRUNNION:					
COMPONENT	Wt (kip)	x-bar (ft)	y-bar (ft)	Mx (kip-ft)	My (kip-ft)
GIRDERS	24.75	-9.42	-0.51	-233.20	-12.50
HAUNCH (REAR TO TRUNNION)	0.37	-1.83	3.23	-0.67	1.18
DECK JOINTS (REAR TO TRUNNION)	1.98	-1.83	3.93	-3.63	7.78
CWT	391.00	-14.85	-2.40	-5807.40	-939.43
Σ	418.09	-14.46	-2.26	-6044.89	-942.97

PROGRESS PLANS

PROJECT NAME: NORTH HERO GRAND ISLE BRIDGE
PROJECT NUMBER: BHF 028-1(26)

FILE NAME: z12b142balance.dgn
PROJECT LEADER: T. FRENCH
DESIGNED BY: H. PROTIN
BRIDGE BALANCE TABLE

PLOT DATE: 4/25/2016
DRAWN BY: T. BRENNAN
CHECKED BY: P. DAVIS
SHEET 90 OF 196

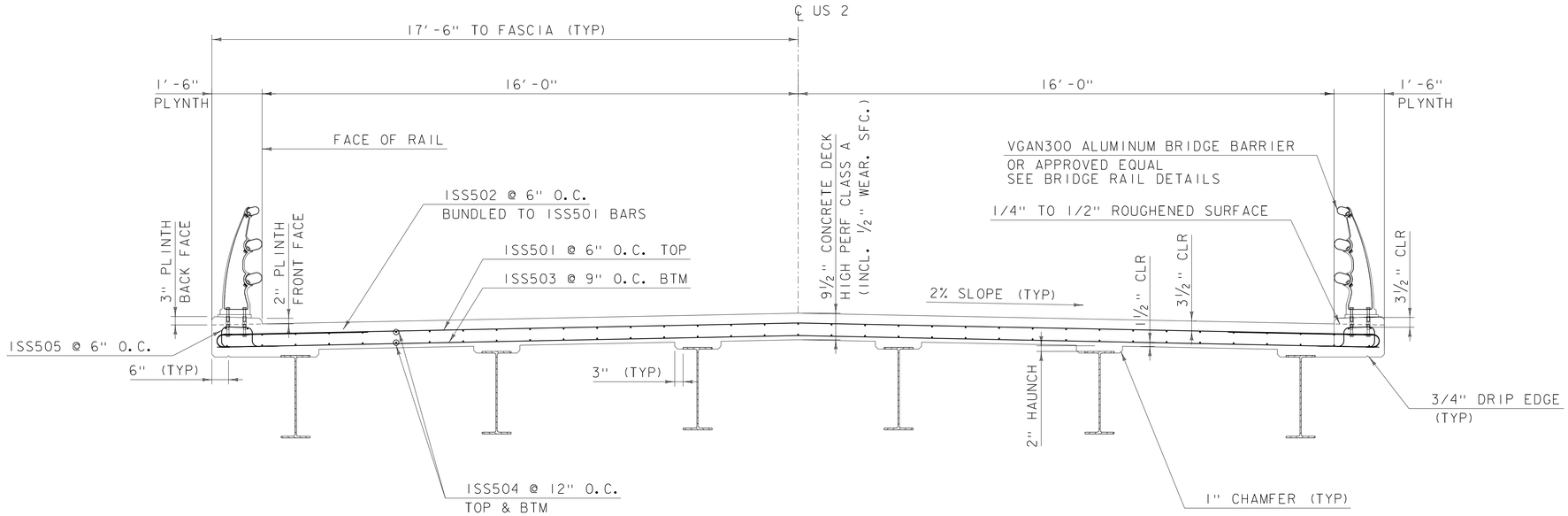

APPROACH SPAN DECK DETAIL (TYP)

SCALE ½" = 1'-0"

2' 0 2'

PROGRESS PLANS

PROJECT NAME:	NORTH HERO GRAND ISLE BRIDGE
PROJECT NUMBER:	BHF 028-1(26)

FILE NAME: zl2bl42apdckdet.dgn	PLOT DATE: 4/25/2016
PROJECT LEADER: T. FRENCH	DRAWN BY: P. LEFEBVRE
DESIGNED BY: P. LEFEBVRE	CHECKED BY: J. MURPHY
APPROACH SPAN DECK DETAILS	SHEET 91 OF 196

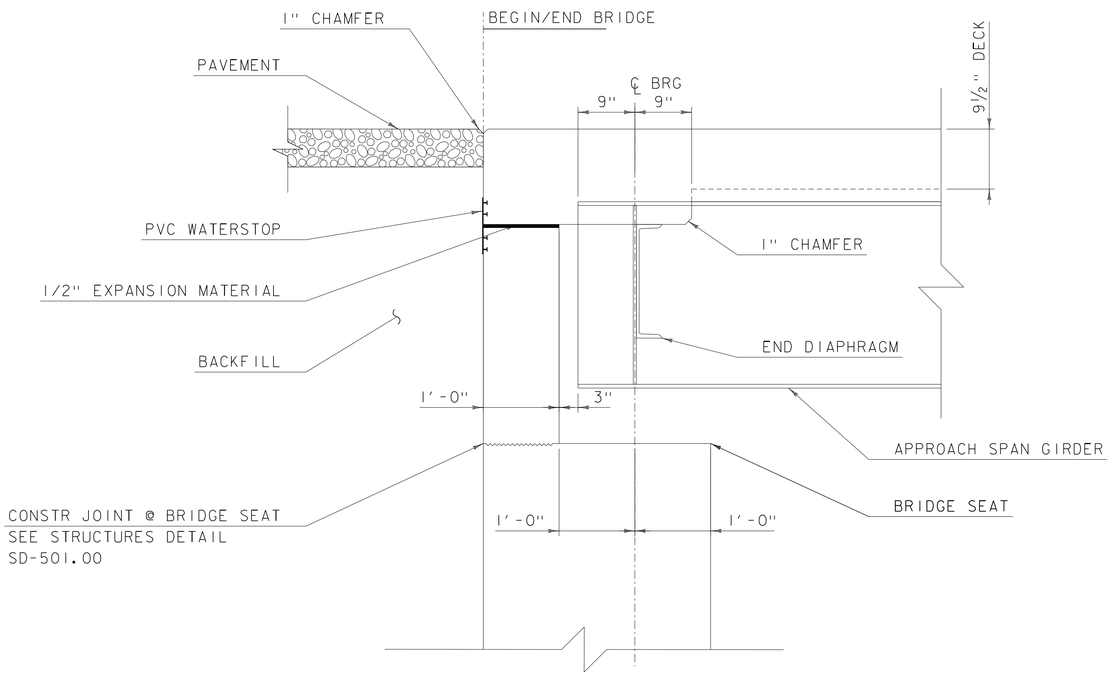

APPROACH SPAN FIXED JOINT DETAIL

SCALE 1" = 1'-0"

1' 0 1'

NOTE:
FOR APPROACH SPAN EXPANSION JOINT DETAILS @ PIER
SEE STRUCTURES DETAIL SD-516.11A&B

PROGRESS PLANS

PROJECT NAME: NORTH HERO GRAND ISLE BRIDGE	
PROJECT NUMBER: BHF 028-1(26)	
FILE NAME: z12b142apjntdet.dgn	PLOT DATE: 4/25/2016
PROJECT LEADER: T. FRENCH	DRAWN BY: P. LEFEBVRE
DESIGNED BY: P. LEFEBVRE	CHECKED BY: J. MURPHY
APPROACH SPAN JOINT DETAILS	SHEET 94 OF 196

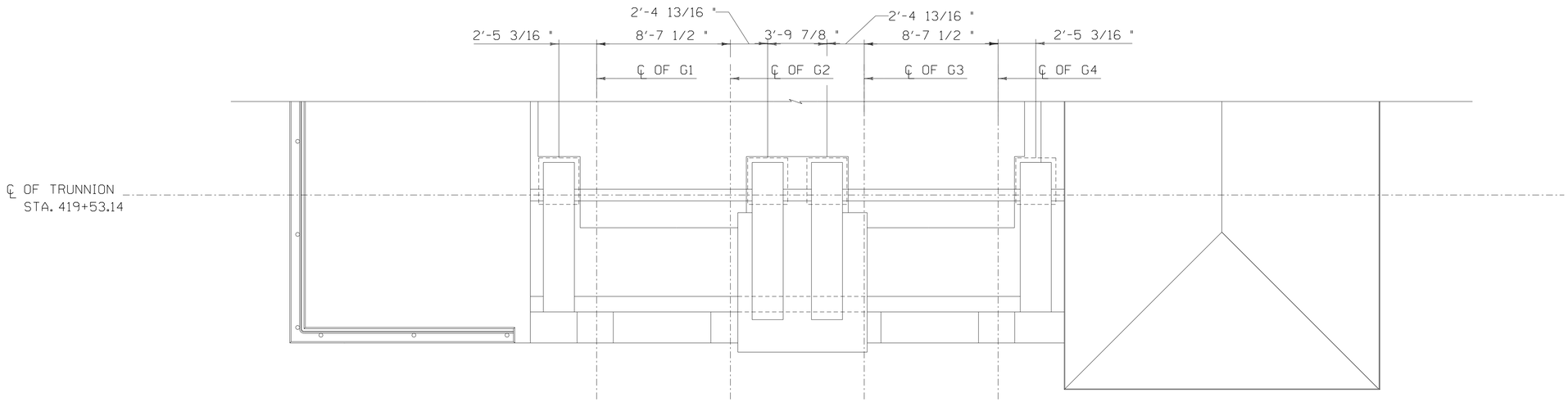

PIER 2 - PLAN
(PIER 1 SIMILAR)

SCALE ¼" = 1'-0"
4' 0 4'

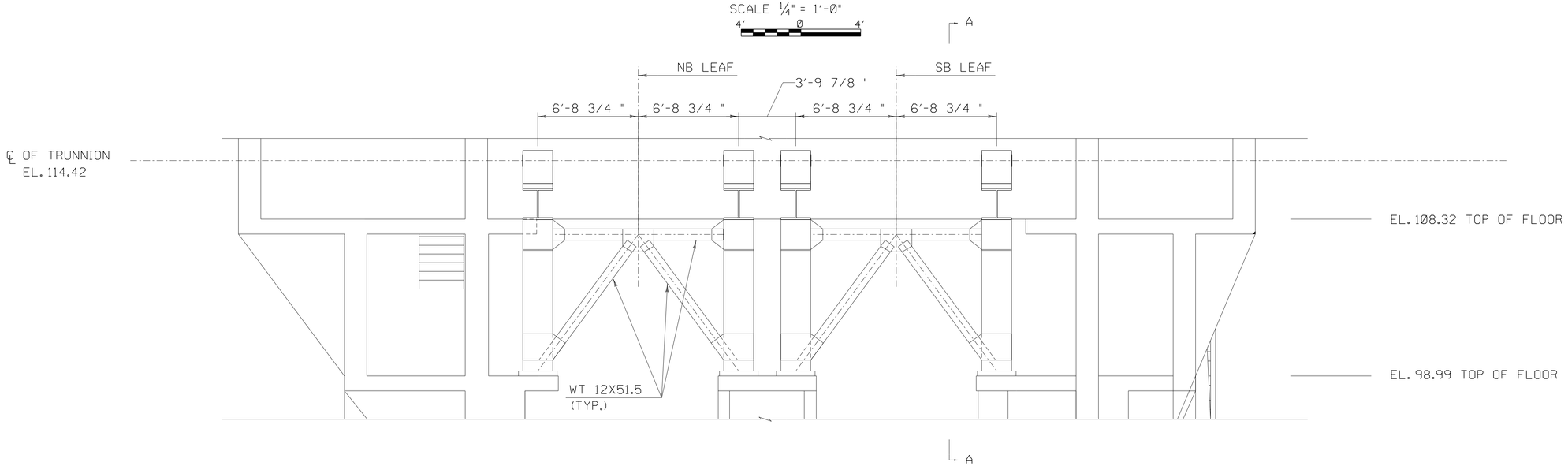

PIER 2 - ELEVATION
(PIER 1 SIMILAR)

SCALE ¼" = 1'-0"
4' 0 4'

NOTE

1. FOR SECTION A-A, SEE SHEET 96

PROGRESS PLANS

PROJECT NAME: NORTH HERO GRAND ISLE BRIDGE	
PROJECT NUMBER: BHF 028-1(26)	
FILE NAME: z12b142tdetail1.dgn	PLOT DATE: 4/25/2016
PROJECT LEADER: T. FRENCH	DRAWN BY: K. PATEL
DESIGNED BY: H. PROTIN	CHECKED BY: P. DAVIS
TRUNNION SUPPORT DETAILS 1	SHEET 95 OF 196

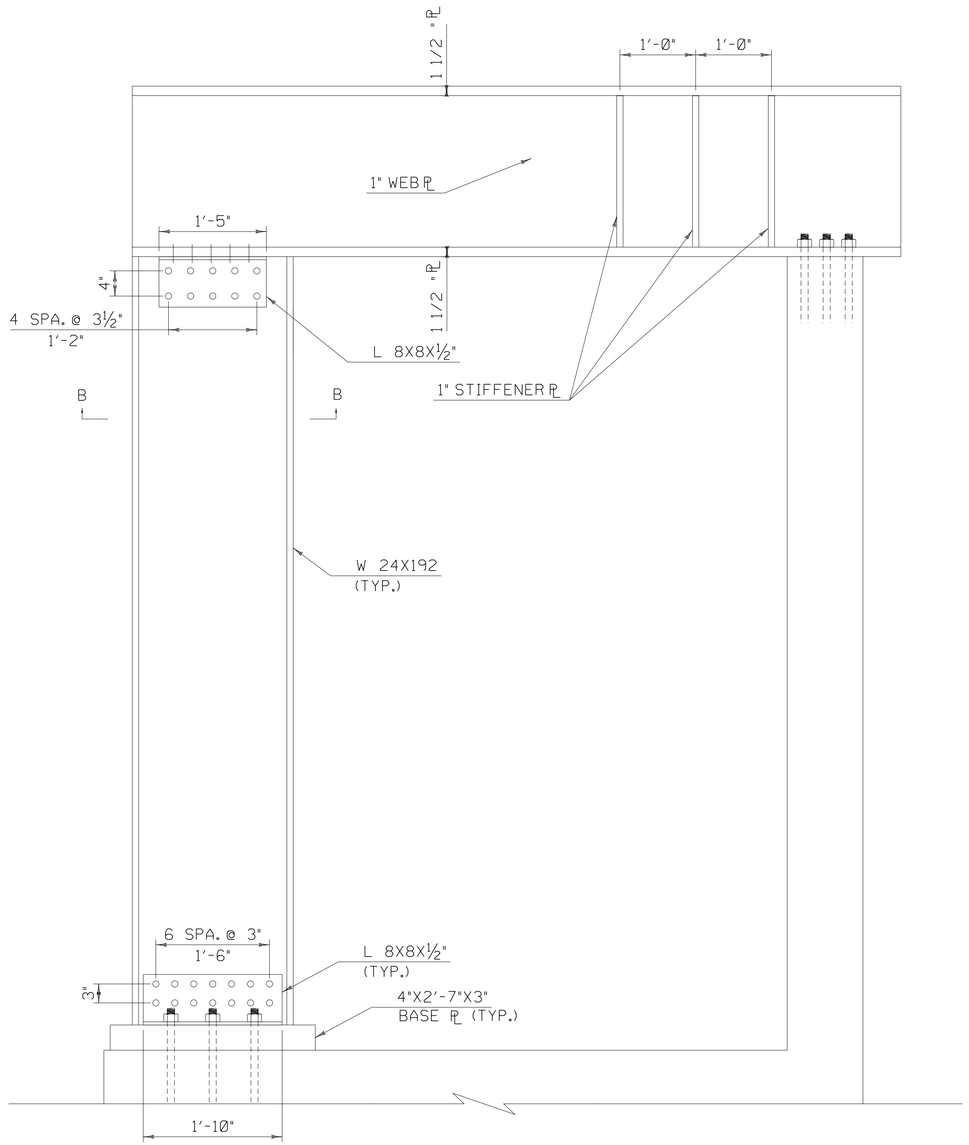

SECTION A-A

SCALE 1" = 1'-0"

1' 0 1'

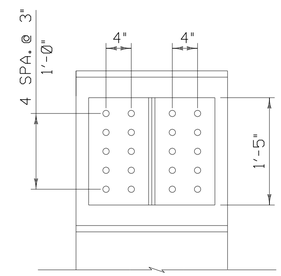

SECTION B-B

NOTE

1. FOR LOCATION OF SECTION A-A, SEE SHEET 95

PROGRESS PLANS

PROJECT NAME: NORTH HERO GRAND ISLE BRIDGE	
PROJECT NUMBER: BHF 028-1(26)	
FILE NAME: z12b142tdetail2.dgn	PLOT DATE: 4/25/2016
PROJECT LEADER: T. FRENCH	DRAWN BY: K. PATEL
DESIGNED BY: H. PROTIN	CHECKED BY: P. DAVIS
TRUNNION SUPPORT DETAILS 2	SHEET 96 OF 196

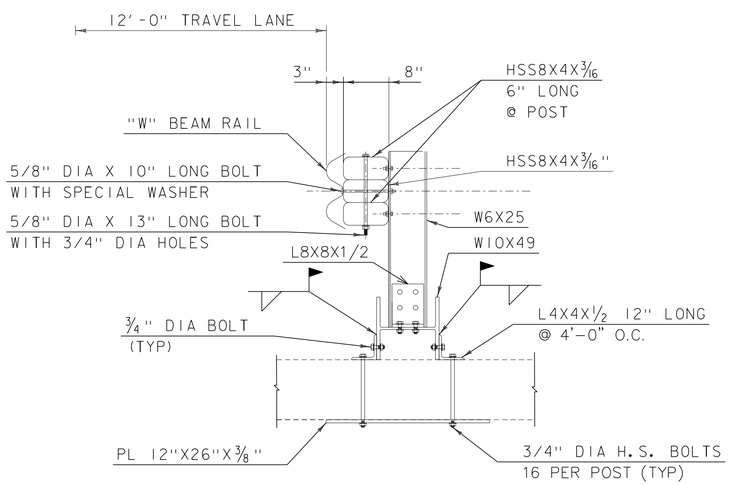

SECTION A–A

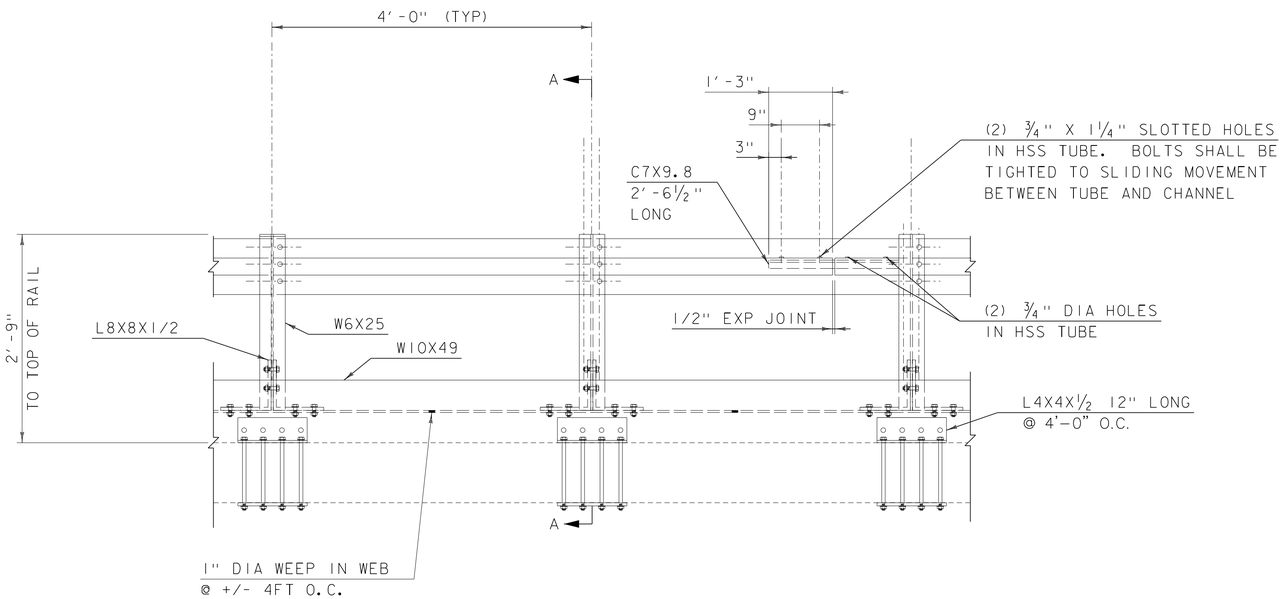

RAILING ELEVATION

PROGRESS PLANS

PROJECT NAME: NORTH HERO GRAND ISLE BRIDGE	
PROJECT NUMBER: BHF 028-1(26)	
FILE NAME: z12b142tempbar.dgn	PLOT DATE: 4/25/2016
PROJECT LEADER: T. FRENCH	DRAWN BY: P. LEFEBVRE
DESIGNED BY: J. MURPHY	CHECKED BY: J. MURPHY
TEMPORARY BRIDGE BARRIER DETAILS	SHEET 99 OF 196

VGAN 301.

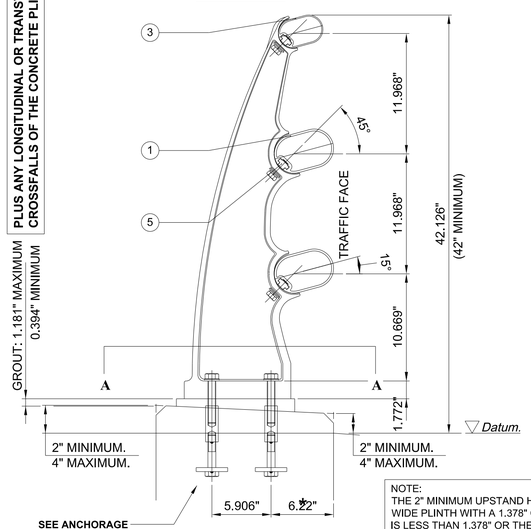

SECTION THROUGH PARAPET.

NOTE:
THE 2" MINIMUM UPSTAND HEIGHT IS BASED ON A 1' 5.717" WIDE PLINTH WITH A 1.378" CROSSFALL. IF THE CROSSFALL IS LESS THAN 1.378" OR THE WIDTH OF THE PLINTH IS GREATER THAN 1' 5.717" THE MINIMUM UPSTAND HEIGHT IS TO BE INCREASED ACCORDINGLY TO ACHIEVE A MINIMUM OVERALL HEIGHT OF 3' 6". THE 2" MAXIMUM UPSTAND HEIGHT IS CONSTANT IN ALL SITUATIONS.

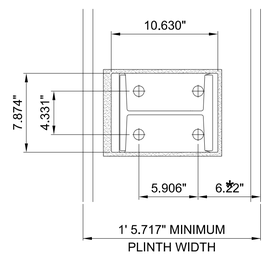

SECTION A-A.

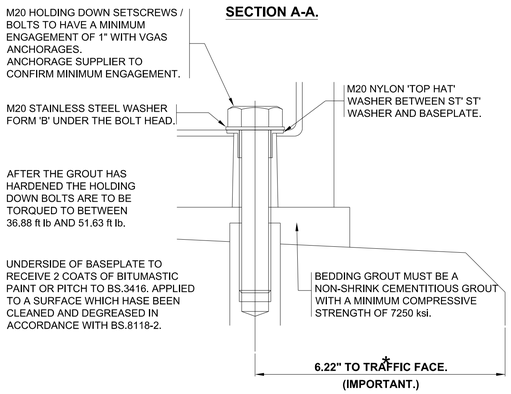

ENLARGED VIEW ON HOLDING DOWN BOLT.

OPTION 1. **OPTION 2.**

END DETAILS.

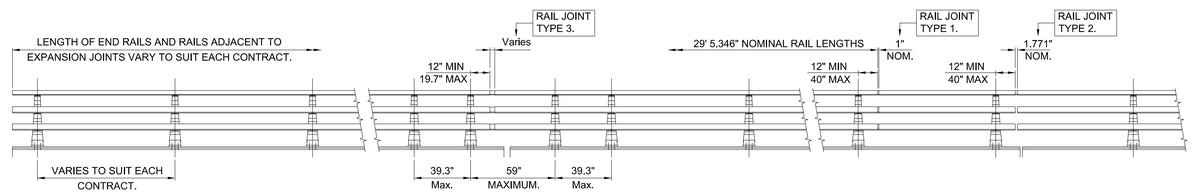

TYPICAL JOINT LOCATIONS.

VGAN 300 SERIES PARAPET IS A **MODULAR SYSTEM** BASED ON **9' 10.11" POST CENTRES**. REDUCTION IN POST CENTRES DOWN TO 7' 3.4" CENTRES CAN OCCUR ADJACENT TO NO-TENSION RAIL JOINTS TYPE 3 AND END OF PARAPET RUN. CLOSER POST CENTRES MAY BE USED FOR SINGLE BAYS WHERE THIS CANNOT BE AVOIDED AT MOVEMENT JOINTS AND END OF PARAPET RUNS.

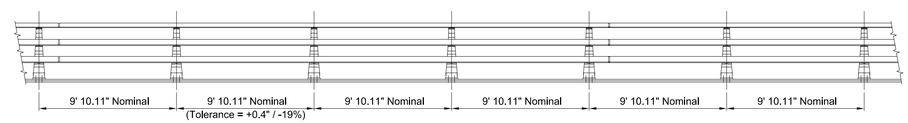

VGAN 301 PARAPET.

GENERAL NOTES.

1/. ALL ALUMINIUM WELDING, IF APPLICABLE, TO BE IN ACCORDANCE WITH BS.EN.1011-4.

2/. WELDERS AND WELDING PROCEDURES ARE IN ACCORDANCE WITH BS.EN.287-2 AND BS.EN.288-4 RESPECTIVELY.

3/. MAIN RAILS CAN BE RADIUSED TO SUIT ON SITE DOWN TO MINIMUM RADII OF 495'. TIGHTER RADII CAN BE SUPPLIED PREFORMED BY SPECIAL ARRANGEMENT.

4/. DIMENSIONS RELATIVE TO HEIGHT DATUM ASSUME THERE IS NO LONGITUDINAL FALL ON THE PLINTH. ADDITIONAL TOLERANCES TO TAKE ACCOUNT OF THESE FALLS ARE PERMISSIBLE.

5/. FABRICATION TO BE IN ACCORDANCE WITH BS.8118-2.

6/. AN EASILY LEGIBLE IDENTIFICATION PLATE SHALL BE APPLIED AND LOCATED NEAR TO THE TOP OF THE FIRST POST AT EACH APPROACH END IN AN EASILY VISIBLE POSITION.

MATERIAL SPECIFICATION.

ITEM	SPECIFICATION	ITEM	SPECIFICATION
MAIN RAIL.	ALL EXTRUSIONS ARE TO BE ALUMINIUM ALLOY EN AW6082 T6 IN ACCORDANCE WITH BS.EN.515, BS.EN.573-3, BS.EN.573-4, BS.EN.755-1, BS.EN.755-2, BS.EN.755-5, BS.EN.755-7 AND BS.EN.755-9. POST SECTION TO BE ALUMINIUM ALLOY A444.0 T4 TO ASTM B 108.	BOLTS.	ALL BOLTS / SETPINS TO CONFORM TO BS.3692 AND BE STAINLESS STEEL TO BS.EN.ISO.3506-1 GRADE A4/80.
MAIN RAIL JOINT.			
PEDESTRIAN RAIL.		SPRING WASHERS.	ALL SPRING WASHERS TO CONFORM TO BS.4464 TYPE 'B' AND BE STAINLESS STEEL TO BS.EN.ISO.3506-2 GRADE A4 OR A2.
PED' RAIL JOINT.			
RAIL CLAMP NUT.		PLAIN WASHERS.	WASHERS TO BE M20 FORM 'B' AND M16 FORM 'C' CONFORMING TO BS.4320 AND BE STAINLESS STEEL TO BS.EN.ISO.3506 GRADE A4 OR A2.
POST SECTION.			

APPROVED ANCHORAGE UNITS
DRAWING NUMBER
VGAS/1.
VGAS/2.
VGAS/3.
OR OTHER APPROPRIATELY APPROVED CAST-IN OR DRILLED ANCHORAGE SYSTEM.

LIST OF ADDITIONAL REFERENCE DRAWING FOR THE VGAN 300 PARAPETS	
DRAWING NUMBER	TITLE
VGAN 300 / 02.	MAIN RAIL CONNECTION DETAILS.
VGAN 300 / 03.	PEDESTRIAN RAIL CONNECTION DETAILS.
VGAN 300 / 04.	MESH INFILL DETAILS (OPTIONAL).

VGAN 300 SERIES PARAPET PERFORMANCE.	
DESIGNED IN ACCORDANCE WITH AASHTO 17th EDITION.	
HIGHWAY DESIGN LOADING.	10 Kips.
PEDESTRIAN RAIL LOADING.	50 lbs/ft.
CRASH TESTED TO NCHRP 350.	
Test Designation 4-10 and 4-11.	TL 3.
Test Designation 4-12.	TL 4.

ALL DIMENSIONS IN MM.

VGAN 300 PARAPET SYSTEM ARE COVERED BY DESIGN RIGHTS AND PATENT PENDING.

COPYRIGHT © APRIL 2007. MDS BARRIERS.

SECTION SCHEDULE

1	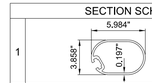	MAIN RAIL SECTION 110931
2	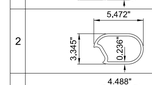	RAIL JOINT SECTION 110932
3	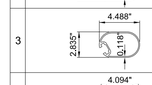	PEDESTRIAN RAIL SECTION 110934
4	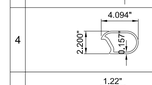	PEDESTRAIN RAIL JOINT SECTION 110935
5	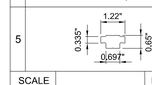	RAIL CONNECTION NUT SECTION 110933

SCALE		DATE	02/04/2007.
DRN.	P.G.H.	CHK.	D.V.C.

TITLE
STANDARD ARRANGEMENT DRAWINGS OF VGAN 300 SERIES ALUMINIUM PARAPET SYSTEM.
VGAN 301.

Rev	Date	By	Description

MANUFACTURING TOLERANCES.

TOLERANCES AS SHOWN UNLESS STATED OTHERWISE.

DIMENSIONS.	TOLERANCES.
GREATER THAN 39.37".	± 0.0787"
LESS THAN 39.37"mm.	± 0.0393"
ANGULAR DIMENSIONS.	± 0°15'

NOTE: ALL ACCUMULATIVE TOLERANCES ARE TO BE CONTAINED WITHIN THE OVERALL TOLERANCE.

SITE ERECTION TOLERANCES.

WILL VARY TO SUIT SITE CONDITIONS.

ALL STANDARDS QUOTED ARE DEEMED CURRENT AT THE DATE THE DRAWING IS ISSUED FOR APPROVAL, UNLESS OTHERWISE STATED.

THIS DRAWING TO BE USED ONLY WITH
W/O.No.
DRAWING TO BE RETURNED TO DRAWING OFFICE ON COMPLETION OF WORK

MDS BARRIERS
43 FRANKLIN ST
EAST HARTFORD CT
Tel 860-289-8033

DRAWING NUMBER
VGAN 300 (US) - 01.

PROGRESS PLANS

PROJECT NAME: NORTH HERO GRAND ISLE BRIDGE
PROJECT NUMBER: BHF 028-1(26)

FILE NAME: z12bl42brraill.dgn
PROJECT LEADER: T. FRENCH
DESIGNED BY:
BRIDGE RAIL DETAILS 1
PLOT DATE: 4/25/2016
DRAWN BY: P. LEFEBVRE
CHECKED BY: J. MURPHY
SHEET 100 OF 196

THE CONCRETE PLINTH IS TO BE DESIGNED BY OTHERS TO RESIST WITHOUT DAMAGE THE FORCES TRANSMITTED BY THE PARAPET CONTAINMENT LEVEL UNDER IMPACT.

NOTE:
THE TOP OF THE ANCHORAGE SOCKETS ARE TO BE SET LEVEL WITH THE HIGH POINT OF THE CONCRETE UPSTAND.
TOLERANCE: +0mm / -5mm.

THE **MINIMUM ENGAGEMENT** OF THE TOP HOLDING DOWN BOLTS INTO THE ANCHORAGE SOCKETS IS **25mm.**

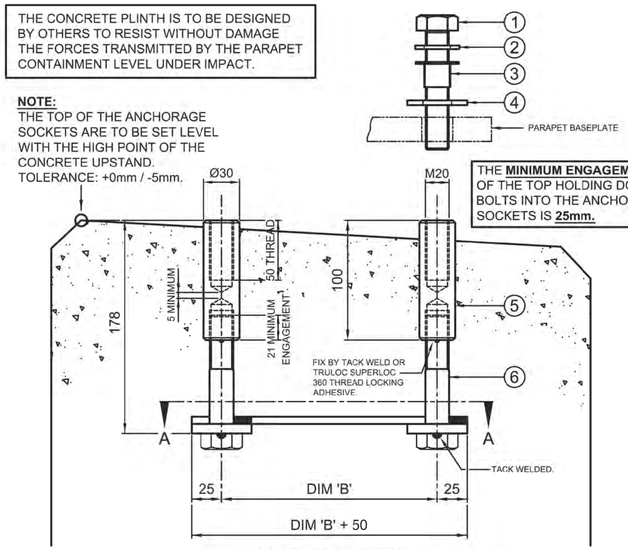

SIDE ELEVATION.

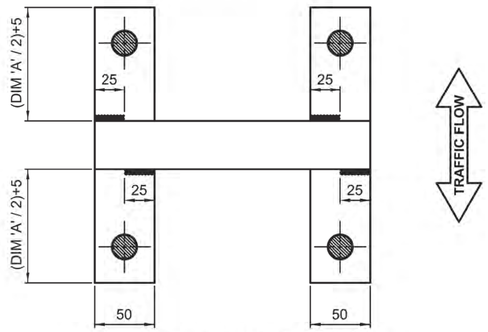

SECTION A-A.

M20 CAST-IN ANCHORAGE SPECIFICATION.

A/. THIS ANCHORAGE IS DESIGNED AND SPECIFIED IN COMPLIANCE WITH:
A.1 THE MANUAL OF CONTRACT DOCUMENTS FOR HIGHWAY WORKS, VOLUME 1, SERIES 400.
A.2 BS.6779-1:1998 HIGHWAY PARAPETS FOR BRIDGES AND OTHER STRUCTURES.

B/. ANCHORAGE IS ONLY FOR USE WITH THE APPROPRIATE V&G VEHICLE RESTRAINT SYSTEMS.

C/. THREAD TOLERANCES:
ANCHOR SOCKET INTERNAL - CLASS 6H MEDIUM FIT TO BS.3643-2: 2007.
THE HOLDING DOWN SETSCREWS - CLASS 6g MEDIUM FIT TO BS.3643-2: 2007.

D/. WELDING:
ALL WELDS TO BE IN ACCORDANCE WITH BS.EN.1011-3:2000.

E/. THE ANCHORAGE FINISH IS SELF COLOUR.

Item No.	Description.	Material.
1.	Parapet Holding Down Fixing: M20 x Suitable length Hexagonal Head Setscrew.	To BS.3692: 2001 and Stainless Steel Class A4/80 to BS.EN.ISO 3506-1: 2009
2.	M20 Flat Washer Form 'A'.	To BS.4320: 1968 and Stainless Steel Grade A4 to BS.EN.ISO 3506-1: 2009
3.	M20 Nylon Top Hat Washer.	Nylon 66.
4.	M20 x 23 i/d x 50 o/d x 4mm Galvanised Washer. (For use with Steel Parapets only.)	To BS.4320: 1968 and Galvanised to BS.EN.ISO 1461.
5.	Anchorage Coupler.	30mm Diameter Bar - SSR550 Stainless Steel grades 1.4401, 1.4436 OR 1.4362 (Duplex) to BS.10088-1:2005.
6.	M20x100 Hexagonal Head Bolt.	High Tensile Steel Class 8.8 to BS.3692:2001.
7.	40x6 Anchorage Base connecting strap.	Carbon Steel to BS.EN.10025-1 and 2: 2004 grade S275JR.
8.	50x8 Anchorage Base straps.	Carbon Steel to BS.EN.10025-1 and 2: 2004 grade S275JR.
9.	Plywood Template.	FSC Softwood plywood board or similar.

MATERIAL SPECIFICATION.

SSR-500 STAINLESS STEEL CONNECTOR.
MINIMUM 0.2% PROOF STRESS = 550 N/mm².
MINIMUM ULTIMATE TENSILE STRENGTH = 650 N/mm².

GRADE 8.8 HIGH TENSILE STEEL BOLTS TO BS.3692:2001
MINIMUM YIELD STRENGTH = 640 N/mm².
MINIMUM TENSILE STRENGTH = 800 N/mm².

CARBON STEEL TO BS.EN.10025-1 & 2:2004 GRADE S275JR.
MINIMUM YIELD STRENGTH = 275 N/mm².
MINIMUM ULTIMATE TENSILE STRENGTH = 410 N/mm².

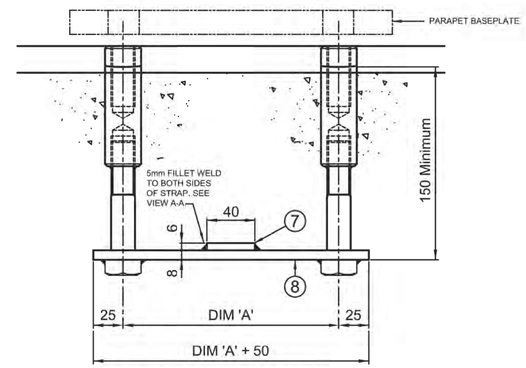

FRONT ELEVATION.

TRAFFIC FLOW

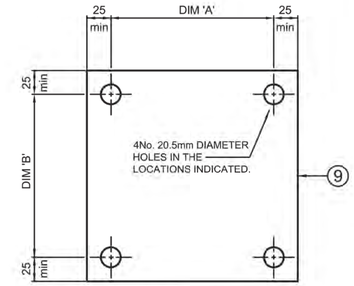

PLYWOOD TEMPLATE.

MILIMETERS	INCHES
20	0.79
25	0.98
30	1.18
50	1.96
60	2.36
100	3.94

INSTALLATION PROCEDURE.

1. THE ANCHOR EMBEDMENT DEPTH IN THE CONCRETE MUST BE NOT LESS THAN 150mm.
2. IF THE PARAPET CROSSFALL AND / OR LONGFALL EXCEEDS A TOTAL OF 20mm BETWEEN SOCKET CENTRES, THE ANCHORAGE MUST BE SET TO ENSURE THAT THE STAINLESS STEEL SOCKET HAS A MINIMUM EMBEDMENT OF 80mm.
3. ANCHORAGES ARE SUPPLIED WITH A PLYWOOD TEMPLATE AND CARBON STEEL BOLTS FOR FIXING TO FORMWORK. THE PLYWOOD IS TO BE NAILED TO THE SHUTTERING BEFORE POURING, IF IT IS NECESSARY TO REMOVE THE PLYWOOD THIS SHOULD NOT BE DONE UNTIL THE CONCRETE IS SET SUFFICIENTLY TO PREVENT ANY DISTURBANCE OF THE ANCHORAGE.
4. WHEN ANCHORAGES ARE SENT TO CONCRETE PRECASTERS ANCHORAGE CENTRES ARE SET AND THE TOP SOCKET THREADS FITTED WITH PLASTIC CAPS OR PLUGS.
5. THE CARBON STEEL BOLTS MUST BE REPLACED IN THE SOCKETS, TO ENSURE THAT THE SOCKET THREADS ARE KEPT CLEAN.
6. APPLY HIGH CREEP RESISTANT GREASE TO SOCKET THREADS AFTER CLEANING BUT PRIOR TO INSERTING THE STAINLESS STEEL HOLDING DOWN BOLT. (ROCOL J166 OR SIMILAR).
7. FOR PARAPET ERECTION SEQUENCE REFER TO PRODUCT SPECIFICATION MANUALS.
8. THE LENGTH OF TOP BOLT TO BE DETERMINED BY THE PARAPET INSTALLER, TO SUIT SITE CONDITIONS, TO ENSURE A **MINIMUM THREAD ENGAGEMENT OF 25mm**. (0.98 inches)
9. FOR ALUMINIUM PARAPETS THE NYLON TOP HAT WASHERS IS TO BE PLACED BETWEEN THE STAINLESS STEEL WASHER AND THE ALUMINIUM BASEPLATE.
10. FOR STEEL PARAPETS THE NYLON WASHERS IS TO BE PLACED BETWEEN THE UNDERSIDE OF THE BOLT HEAD AND THE GALVANISED STEEL WASHER.

ALL DIMENTIONS IN MM UNLESS OTHERWISE NOTED

COPYRIGHT © APRIL 2011, MDS BARRIERS

Rev	Date	By	Description
B	Apr 11	dvc	Redrawn with minor amendments.

MANUFACTURING TOLERANCES.

TOLERANCES AS SHOWN UNLESS STATED OTHERWISE.

DIMENSIONS.	TOLERANCES.
GREATER THAN 1000mm.	± 2mm
LESS THAN 1000mm.	± 1mm
ANGULAR DIMENSIONS.	± 0°15'

NOTE: ALL ACCUMULATIVE TOLERANCES ARE TO BE CONTAINED WITHIN THE OVERALL TOLERANCE.

SITE ERECTION TOLERANCES.

WILL VARY TO SUIT SITE CONDITIONS.

ALL STANDARDS QUOTED ARE DEEMED CURRENT AT THE DATE THE DRAWING IS ISSUED FOR APPROVAL, UNLESS OTHERWISE STATED.

THIS DRAWING TO BE USED ONLY WITH
W/O.No.
DRAWING TO BE RETURNED TO DRAWING OFFICE ON COMPLETION OF WORK

MDS Barriers
43 Franklin St
East Hartford CT 06108
Tel: 860-906-3390
Fax: 860-289-8035
e-mail: info@MDSbarriers.com

SCALE		DATE	06/04/2011
DRN.	P.G.H.	CHK.	D.V.C.

TITLE
STANDARD ARRANGEMENT DRAWINGS OF M20 ANCHORAGE UNIT TYPE 3.

DRAWING NUMBER
VGAS - 3.B.

PROGRESS PLANS

HDR

PROJECT NAME: NORTH HERO GRAND ISLE BRIDGE
PROJECT NUMBER: BHF 028-1(26)

FILE NAME: zi2bl42brra112.dgn
PROJECT LEADER: T. FRENCH
DESIGNED BY:
BRIDGE RAIL DETAILS 2

PLOT DATE: 4/25/2016
DRAWN BY: P. LEFEBVRE
CHECKED BY: J. MURPHY
SHEET 101 OF 196

GENERAL NOTES

1. DETAILS OF MACHINERY SHALL CONFORM TO THE LATEST AASHTO STANDARD SPECIFICATIONS FOR MOVABLE HIGHWAY BRIDGES UNLESS OTHERWISE SHOWN ON THE PLANS OR PROVIDED FOR IN THE SPECIFICATIONS.

2. ALL DIMENSIONS FOR MACHINE FINISHED SURFACES SHALL BE HELD TO .010" AFTER MACHINING EXCEPT AS OTHERWISE REQUIRED BY THE DRAWINGS OR SPECIFICATIONS. ALL KEYS ARE TO CONFORM TO ANSI B17.1 UNLESS OTHERWISE NOTED. STEEL IS ASTM A709 GR36, UNLESS OTHERWISE NOTED. THE CONTRACTOR HAS THE OPTION OF SUBSTITUTING ASTM A709 GR50 AT NO ADDITIONAL COMPENSATION.

3. PROVIDE ASTM A449 H.S. BOLTS AS REQUIRED TO CONNECT MACHINERY TO STRUCTURAL STEEL. ALL ASTM A449 BOLTS CONNECTING MACHINERY TO STRUCTURAL STEEL SHALL HAVE CLEARANCE OF NOT MORE THAN 0.010" BETWEEN THE BODY OF THE BOLT AND THE HOLE. ALL H.S. FASTENERS SHALL HAVE A HARDENED PLAIN WASHER UNDER THE HEAD AND NUT. ALL BOLT HOLES IN CASTINGS SHALL BE SPOTFACED. NEW H.S. BOLTS THAT HAVE BEEN TORQUED SHALL NOT BE REUSED.

4. PROVIDE STAINLESS STEEL SHIMS FOR LEVELING AND ALIGNING ALL MACHINERY COMPONENTS. SHIM PACKS SHALL BE 1/2". NOMINAL THICKNESS UNLESS OTHERWISE SPECIFIED WITH ADJUSTMENTS FOR 1/64" VARIATIONS. ALL SHIMS TO BE FULL FOOTPRINT OF MACHINERY COMPONENT AND MADE FROM STAINLESS STEEL. U-SHAPED OR SLOTTED SHIMS ARE NOT ACCEPTABLE. STEPPED SHIMS ARE NOT ACCEPTABLE. IF REQUIRED FOR ALIGNMENT OF THE PINION TO THE RACK, TAPERED SHIMS SHALL BE PROVIDED AT NO COST TO VTRANS.

5. MACHINERY DIMENSIONS SHOWN ON DRAWINGS ARE DIMENSIONS AFTER MACHINING.

   UNLESS OTHERWISE NOTED, FITS AND FINISHES FOR MACHINERY SHALL BE AS FOLLOWS:

SURFACE	FIT ENGLISH	FINISH MICRO INCH
MACHINERY BASE ON STEEL	-	250
MACHINERY PARTS IN FIXED CONTACT	-	125
SHAFT JOURNAL	RC6	8
JOURNAL BUSHINGS	RC6	16
SOLID BUSHING IN BASE (TO 1/4" WALL)	FN1	63
SOLID BUSHING IN BASE (OVER 1/4" WALL)	FN2	63
HUBS ON SHAFTS (TO 2" BORE)	FN2	32
HUBS ON SHAFTS (OVER 2" BORE)	FN2	63
TURNED BOLTS IN FINISHED HOLES	LC6	63
SPLIT BUSHING IN BASE	LC1	125
SLIDING BEARINGS	RC6	32
KEYS AND KEYWAYS	LC3	63
SHAFTS	-	63

   THE ABOVE FITS FOR CYLINDRICAL PARTS SHALL ALSO APPLY TO THE MAJOR DIMENSIONS OF NON-CYLINDRICAL PARTS.

6. MODEL NUMBERS AND DETAILS OF STANDARD COMPONENTS ARE BASED ON MANUFACTURER'S CATALOG DATA CURRENT TO THE TIME THE DRAWINGS WERE PREPARED. THE MODELS SPECIFIED ARE ONLY TO ESTABLISH A STANDARD FOR QUALITY AND TO DEFINE PERFORMANCE REQUIREMENTS. EQUIVALENT MODELS FROM OTHER MANUFACTURERS MAY BE SUBSTITUTED AT THE OPTION OF THE CONTRACTOR AND WITH THE APPROVAL OF THE ENGINEER.

7. ALL STEEL PARTS SHALL BE SHOP PAINTED PRIOR TO INSTALLATION IN THE FIELD. ALL FAYING SURFACES TO BE PRIME PAINTED ONLY. BEARING SURFACES OR SURFACES FOR PINS AND SLEEVES SHALL NOT BE PAINTED.

8. THE CONTRACTOR SHALL SUBMIT SHOP AND ASSEMBLY DRAWINGS BASED ON THE CONTRACT DRAWINGS AND SPECIFICATIONS FOR APPROVAL. IT WILL BE THE CONTRACTOR'S RESPONSIBILITY TO DETAIL, COORDINATE AND VERIFY THE RELATIONSHIP AND ASSEMBLY OF ALL PARTS FOR A COMPLETE WORKING SYSTEM. ALL REQUIRED MACHINING, RIGGING, SPECIAL SHIMMING, LUBRICATION, PAINTING, TESTING AND ASSEMBLY SHALL BE CONSIDERED PART OF THE WORK.

9. ALL WELDMENTS ARE TO BE STRESS RELIEVED AND BLAST CLEANED AFTER WELDING AND BEFORE MACHINING.

10. ALL TRANSITIONS OF SURFACES OF MACHINERY SHALL BE BLENDED SMOOTH.

11. ALL MATING SURFACES OF MACHINERY PARTS, SUPPORTS AND EXTERNAL EDGES SHALL BE MACHINED.

12. ANY MODIFICATIONS OF MACHINERY AFFECTED BY THE IMPLEMENTATION OF THE PROJECT SHALL BE INCLUDED IN THE FINAL AS BUILT DOCUMENTS. HIGH PRIORITY SHALL BE GIVEN TO THE PHASING OF CONSTRUCTION. A PROPOSED PHASING PLAN, TO BE INCLUDED IN THE CONTRACT DOCUMENTS, SHALL BE DEVELOPED AND SUBMITTED FOR REVIEW DURING VARIOUS STAGES OF THE CONSTRUCTION. THE CONTRACTOR SHALL DEVELOP DETAILED PROCEDURES FOR THE IMPLEMENTATION OF THE NEW SYSTEM, AS WELL AS, PLANS AND SPECIFICATIONS FOR THE REMOVAL OF THE OLD EQUIPMENT. ANY EXTENDED BRIDGE OUTAGES SHALL BE COORDINATED WITH APPROPRIATE AUTHORITIES.

13. THE CONTRACTOR SHALL PERFORM ALL WORK IN ACCORDANCE WITH THESE CONTRACT DRAWINGS, THE CONTRACT SPECIFICATIONS AND ALL OTHER CONTRACT DOCUMENTS. IF A CONFLICT ARISES BETWEEN THE CONTRACT DRAWINGS AND SPECIFICATIONS, THE MORE STRINGENT OF THE TWO SHALL GOVERN.

14. THE CONTRACTOR SHALL PERFORM ALL WORK WITH CARE SO THAT ANY MATERIAL WHICH IS TO REMAIN THE PROPERTY OF VTRANS, WILL NOT BE DAMAGED. IF THE CONTRACTOR DAMAGES ANY OF THESE MATERIALS, THE DAMAGED MATERIAL SHALL BE REPAIRED OR REPLACED IN A MANNER SATISFACTORY TO THE ENGINEER AT NO ADDITIONAL COST TO VTRANS.

HYDRAULIC SYSTEM NOTES

1. SHOP DRAWINGS SHALL BE SUBMITTED FOR ALL HYDRAULIC COMPONENTS AND EQUIPMENT AS REQUIRED IN THE DRAWINGS AND SPECIFICATIONS. IN ADDITION, THE FOLLOWING ADDITIONAL DATA FOR THE HYDRAULIC SYSTEM SHALL BE SUBMITTED TO THE ENGINEER FOR REVIEW:

   A. HYDRAULIC SCHEMATIC WITH BILL OF MATERIALS. HYDRAULIC SYMBOLS UTILIZED IN THE SCHEMATIC AND SHOP DRAWING SUBMITTALS SHALL BE IN ACCORDANCE WITH ANSI Y32.10.

   B. CERTIFIED DIMENSIONAL PRINTS FOR ALL MAJOR HYDRAULIC COMPONENTS. THIS SHALL INCLUDE AT A MINIMUM THE HYDRAULIC CYLINDERS, THE MANIFOLDS, THE RESERVOIR, THE PUMPS, AND THE MOTORS.

   C. HYDRAULIC POWER UNIT ASSEMBLY DRAWING INCLUDING OVERALL DIMENSIONS, BILL OF MATERIALS, LIFTING/HANDLING PROVISIONS, AND REQUIRED CLEARANCES/MAINTENANCE ENVELOPES.

   D. ENGINEERING AND PERFORMANCE DATA OF ALL ITEMS SUPPLIED, INCLUDING MATERIAL SPECIFICATIONS, PUMP EFFICIENCIES, COMPONENT CATALOG CUTS, ETC.

   E. INITIAL HYDRAULIC FILL AND FIELD FLUSHING PROCEDURE.

   F. COMPLETE PIPING LAYOUTS AND DETAILS, INCLUDING FITTINGS, LENGTHS, SUPPORT TYPES, SUPPORT LOCATIONS.

2. THE CONTRACTOR SHALL FURNISH MAINTENANCE AND OPERATION MANUALS GIVING COMPLETE INSTRUCTIONS RELATIVE TO ASSEMBLY, INSTALLATION, OPERATION, ADJUSTMENT, ALIGNMENT, LUBRICATION, MAINTENANCE, DISASSEMBLY, FILLING, FLUSHING, AND VENTING. THE MANUAL SHALL INCLUDE A COMPLETE PARTS LISTS AND ALL SHOP DRAWINGS AND CUTSHEETS FOR THE INSTALLED HYDRAULIC SYSTEM.

3. PROVIDE A WARNING SIGN IN HYDRAULICS HOUSE TO RELIEVE ACCUMULATOR PRESSURE BEFORE WORKING ON HYDRAULIC SYSTEM.

4. THE HYDRAULIC SYSTEM SHALL HAVE HIGH POINT VENTS AND LOW POINT DRAINS.

5. THE HYDRAULIC SYSTEM SHALL BE FLUSHED TO A MINIMUM ISO 4406 CLEANLINESS LEVEL OF 16/14/12. IF ANY COMPONENT REQUIRED A HIGHER CLEANLINESS THAT LEVEL SHALL BE MET.

ABBREVIATIONS

ASTM - AMERICAN SOCIETY FOR TESTING AND MATERIALS

CL - CENTERLINE

DIA - DIAMETER

DWG - DRAWING

FT - FEET

HP - HORSEPOWER

HS - HIGH STRENGTH

KIPS - KILOPOUNDS

LBS - POUNDS

MK - MARK

MPT - MAINTENANCE AND PROTECTION OF TRAFFIC

QTY - QUANTITY

SS - STAINLESS STEEL

TYP - TYPICAL

USCG - UNITED STATES COAST GUARD

BC - BOLT CIRCLE

PROGRESS PLANS

HDR

PROJECT NAME: NORTH HERO GRAND ISLE BRIDGE
PROJECT NUMBER: BHF 028-1(26)

FILE NAME: z12b142mechnote.dgn
PROJECT LEADER: T. FRENCH
DESIGNED BY: C. MADDEN
MECHANICAL GENERAL NOTES

PLOT DATE: 4/25/2016
DRAWN BY: C. MADDEN
CHECKED BY: P. JAKUBICKI
SHEET 103 OF 196

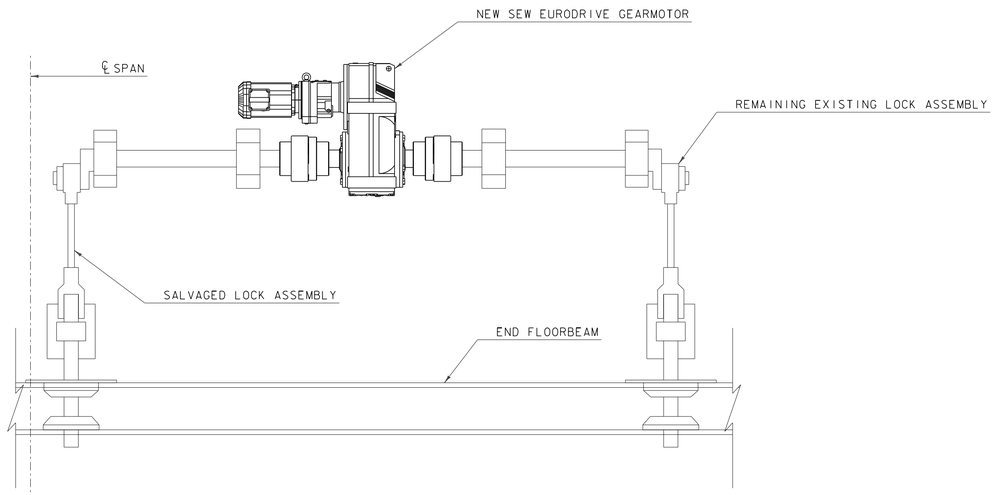

TEMPORARY SPAN LOCK ASSEMBLY

SCALE 1" = 1'-0"

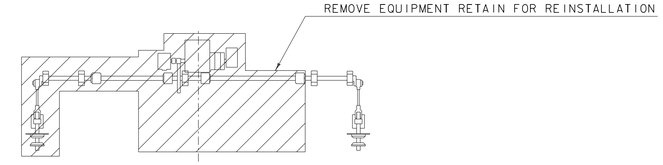

EXISTING SPAN LOCK DEMOLITION PLAN

SCALE 1/4" = 1'-0"

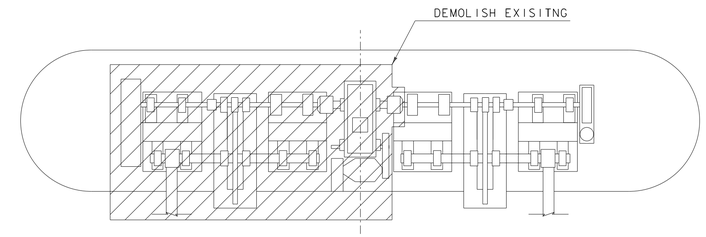

EXISTING OPERATING MACHINERY DEMOLITION PLAN

SCALE 1/4" = 1'-0"

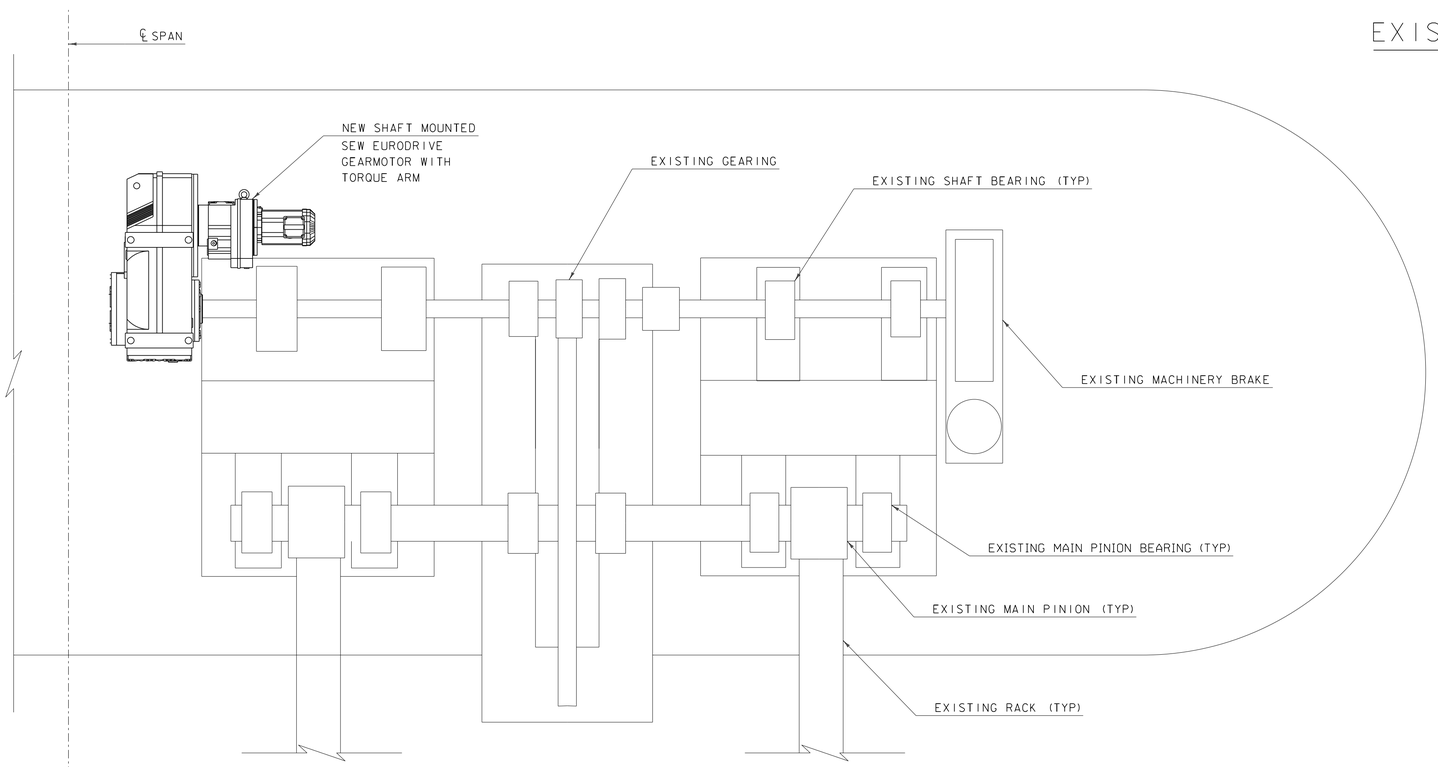

TEMPORARY SPAN DRIVE ASSEMBLY (2) LOCATIONS

SCALE 1" = 1'-0"

BILL OF MATERIALS

PROGRESS PLANS

PROJECT NAME: NORTH HERO GRAND ISLE BRIDGE
PROJECT NUMBER: BHF 028-1(26)

FILE NAME: z12b142mconst1.dgn
PROJECT LEADER: T. FRENCH
DESIGNED BY: C. MADDEN
PLOT DATE: 4/25/2016
DRAWN BY: C. MADDEN
CHECKED BY: P. JAKUBICKI
TEMPORARY OPERATING MACHINERY PHASE I

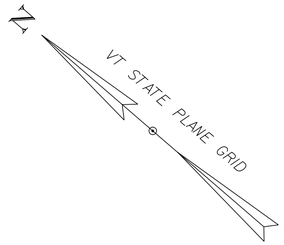

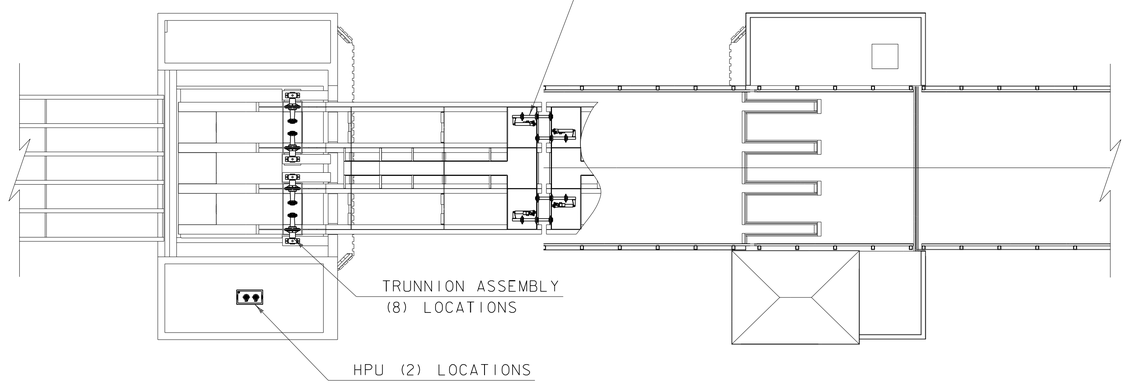

MACHINERY LOCATION PLAN

SCALE 1/16" = 1'-0"
16 0 16

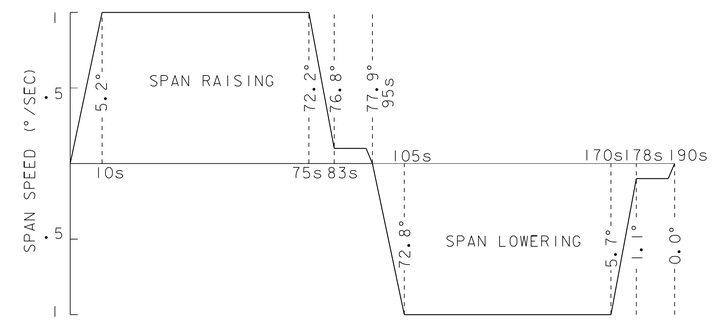

PROPOSED SPAN OPERATING CURVE

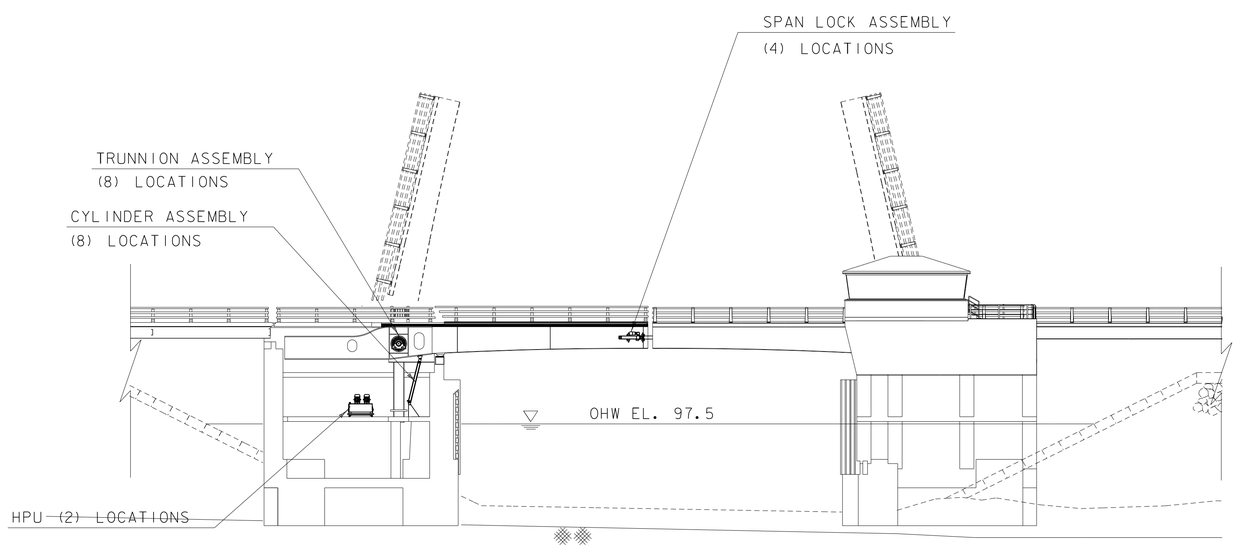

MACHINERY LOCATION ELEVATION

SCALE 1/16" = 1'-0"
16 0 16

NOTES:

1. MACHINERY TO BE CONSIDERED SYMMETRICAL ACROSS THE CHANNEL CENTER LINE WITH THE EXCEPTION OF THE SPAN LOCKS.
2. INSTRUMENTATION, BUMPER BLOCKS AND HYDRAULIC PIPING NOT SHOWN.

PROGRESS PLANS

HDR

PROJECT NAME: NORTH HERO GRAND ISLE BRIDGE	
PROJECT NUMBER: BHF 028-1(26)	
FILE NAME: z12br142mechpe.dgn	PLOT DATE: 4/25/2016
PROJECT LEADER: T. FRENCH	DRAWN BY: C. MADDEN
DESIGNED BY: C. MADDEN	CHECKED BY: P. JAKUBICKI
MECHANICAL PLAN & ELEVATION	SHEET 109 OF 196

BILL OF MATERIALS

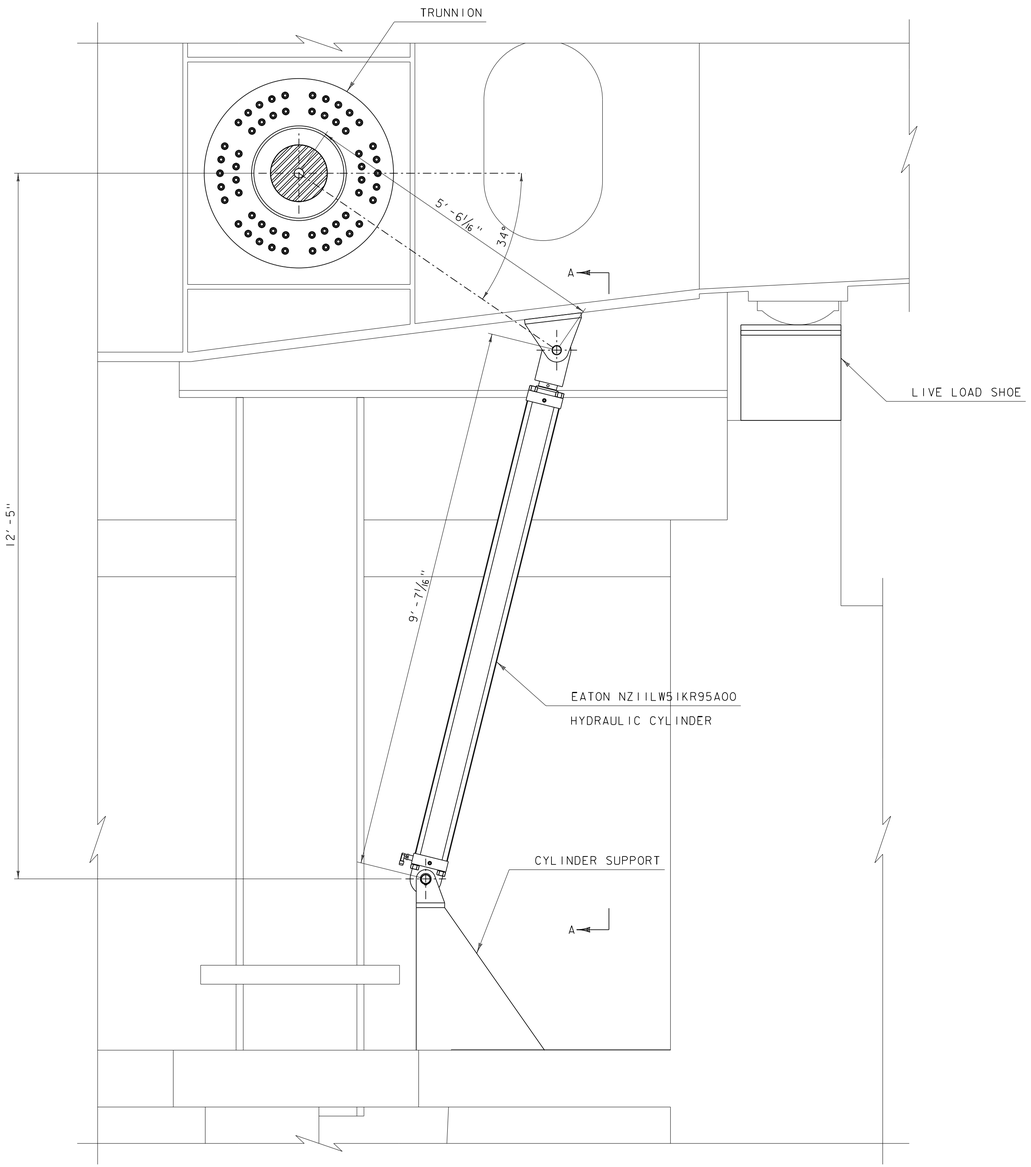

HYDRAULIC CYLINDER ASSEMBLY ELEVATION (CLOSED)

SCALE 1" = 1'-0"

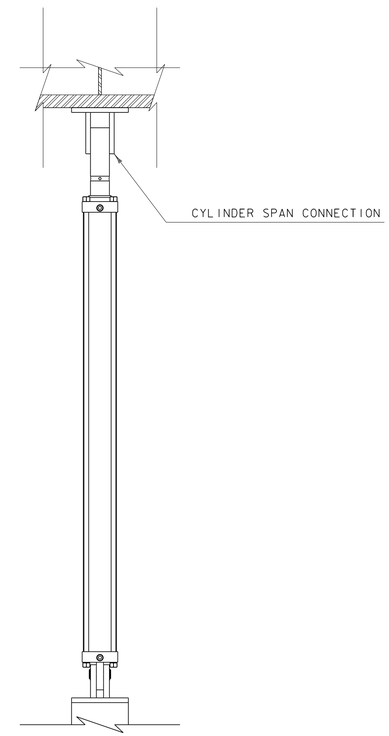

VIEW A-A

SCALE 1" = 1'-0"

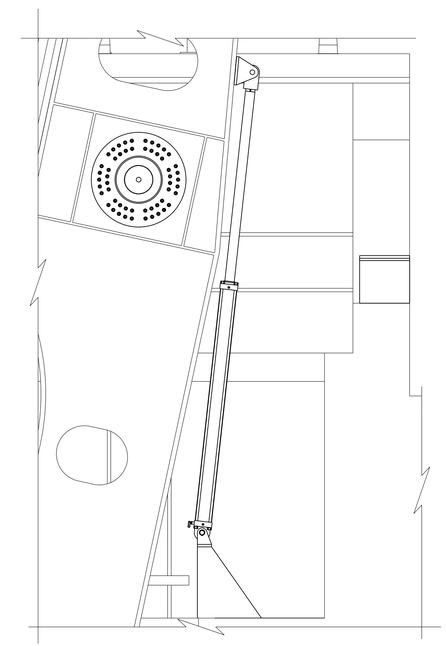

HYDRAULIC CYLINDER ASSEMBLY ELEVATION (OPEN)

SCALE 1" = 1'-0"

PROGRESS PLANS

PROJECT NAME: NORTH HERO GRAND ISLE BRIDGE	
PROJECT NUMBER: BHF 028-1(26)	
FILE NAME: z12b142opmach1.dgn	PLOT DATE: 4/25/2016
PROJECT LEADER: T. FRENCH	DRAWN BY: C. MADDEN
DESIGNED BY: C. MADDEN	CHECKED BY: P. JAKUBICKI
OPERATING MACHINERY ASSEMBLY	SHEET 110 OF 196

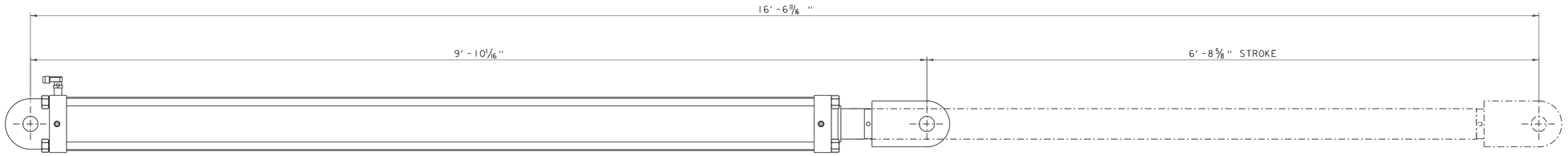

SPAN DRIVE CYLINDER ELEVATION

SCALE 1/2" = 1'-0"

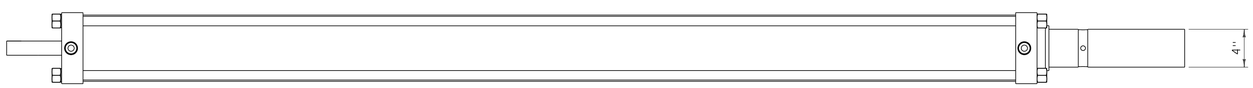

SPAN DRIVE CYLINDER PLAN

SCALE 1/2" = 1'-0"

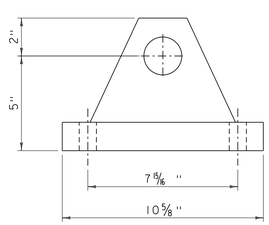

CYLINDER BRACKET

SCALE 1/4" = 1'-0"

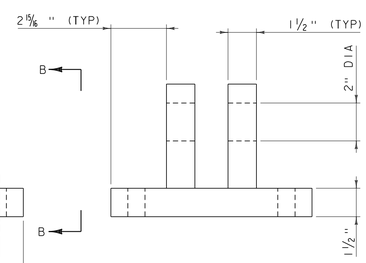

VIEW B-B

SCALE 1/4" = 1'-0"

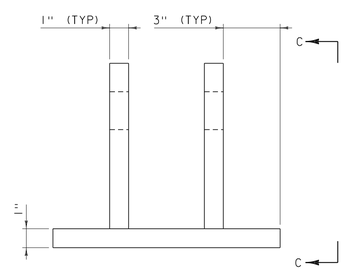

CYLINDER SPAN CONNECTION

SCALE 1/4" = 1'-0"

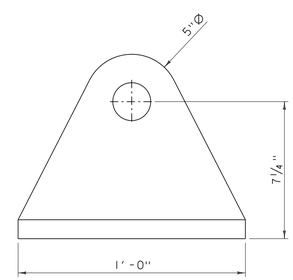

VIEW C-C

SCALE 1/4" = 1'-0"

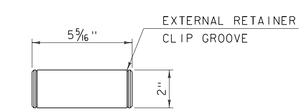

CYLINDER BRACKET PIN

SCALE 1/4" = 1'-0"

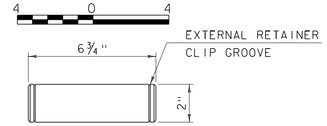

CYLINDER SPAN CONNECTION PIN

SCALE 1/4" = 1'-0"

PROGRESS PLANS

HDR

PROJECT NAME: NORTH HERO GRAND ISLE BRIDGE

PROJECT NUMBER: BHF 028-1(26)

FILE NAME: z12b142opmach2.dgn

PROJECT LEADER: T. FRENCH

DESIGNED BY: C. MADDEN

CYLINDER AND CONNECTION DETAILS

PLOT DATE: 4/25/2016

DRAWN BY: C. MADDEN

CHECKED BY: P. DAVIS

SHEET 111 OF 196

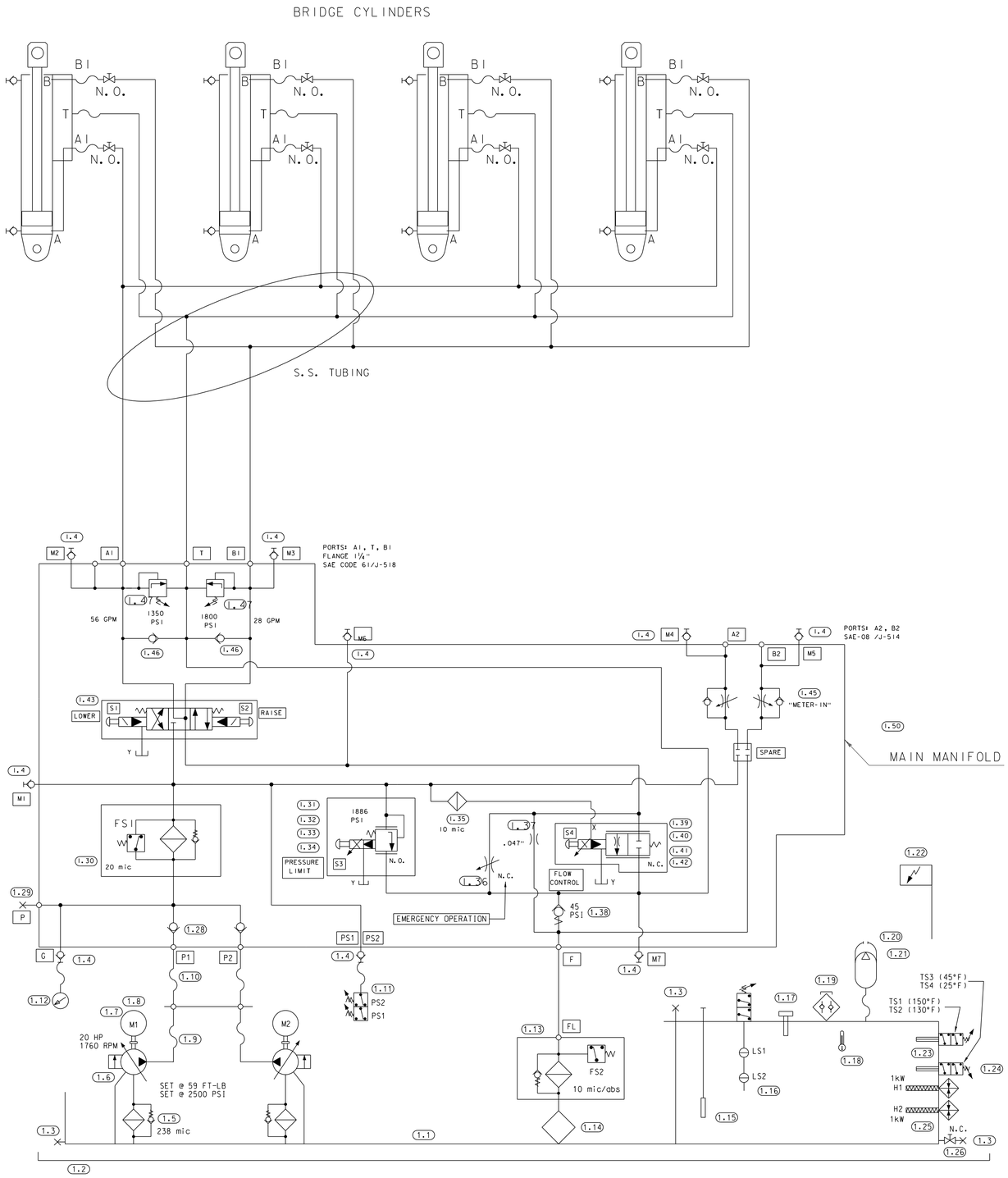

HYDRAULIC SCHEMATIC

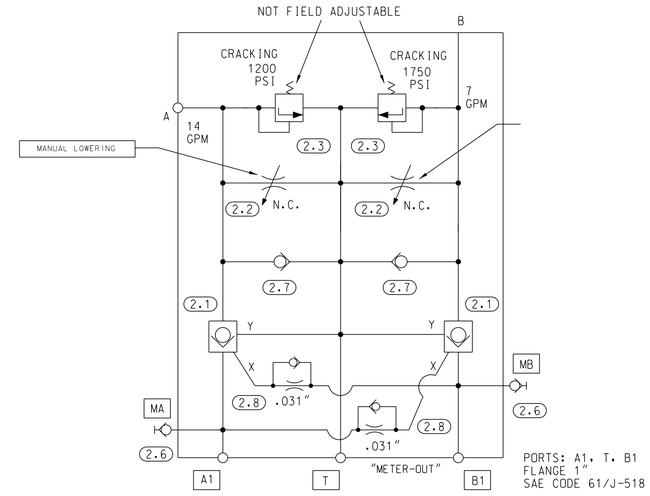

CYLINDER MANIFOLD SCHEMATIC

ITEM 2.4

PROGRESS PLANS

PROJECT NAME: NORTH HERO GRAND ISLE BRIDGE	
PROJECT NUMBER: BHF 028-1(26)	
FILE NAME: z12b142opmach4.dgn	PLOT DATE: 4/25/2016
PROJECT LEADER: T. FRENCH	DRAWN BY: W. KAPLO
DESIGNED BY: W. KAPLO	CHECKED BY: P. JAKUBICKI
HYDRAULIC SCHEMATIC	SHEET 113 OF 196

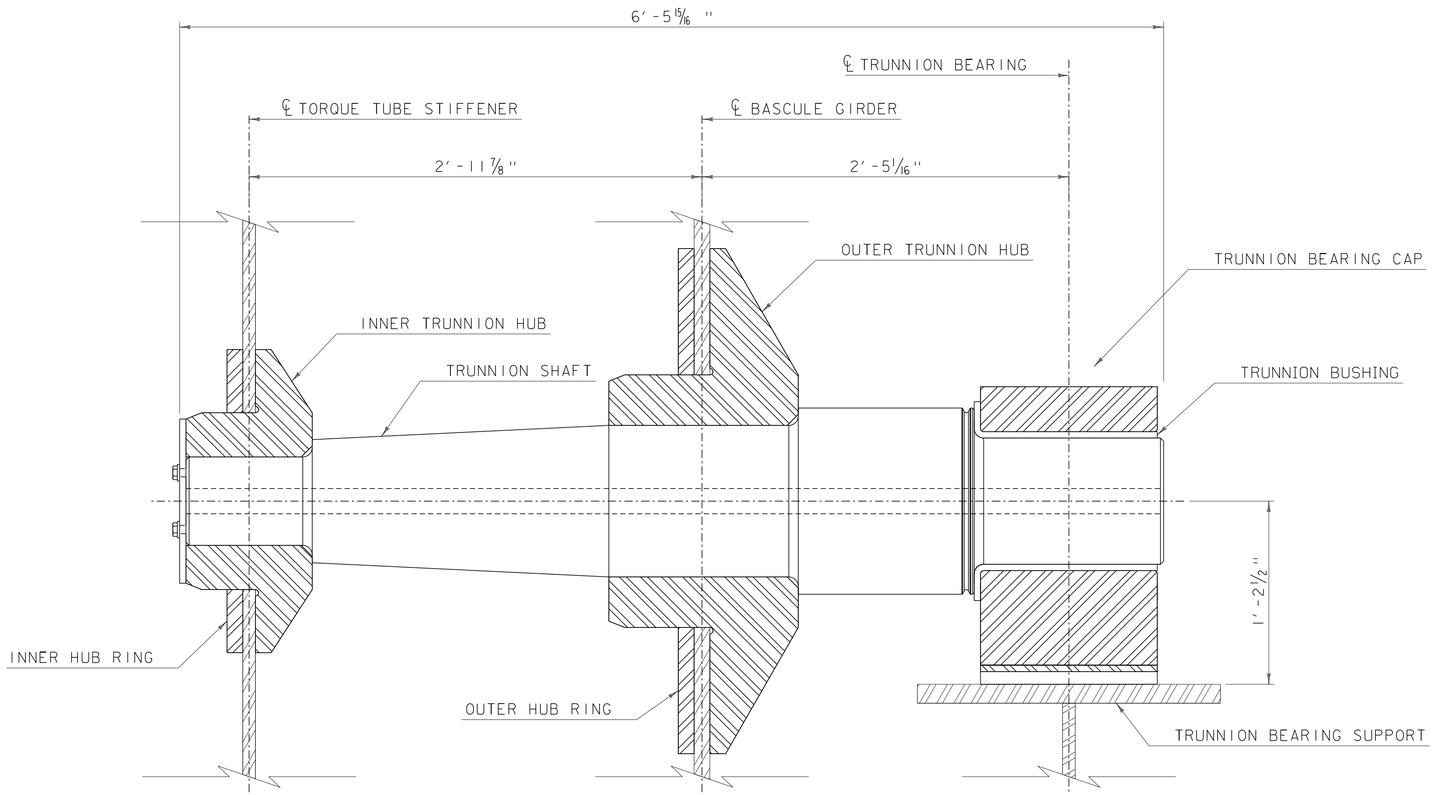

SECTION A-A

SCALE 1/2" = 1'-0"

2 0 2

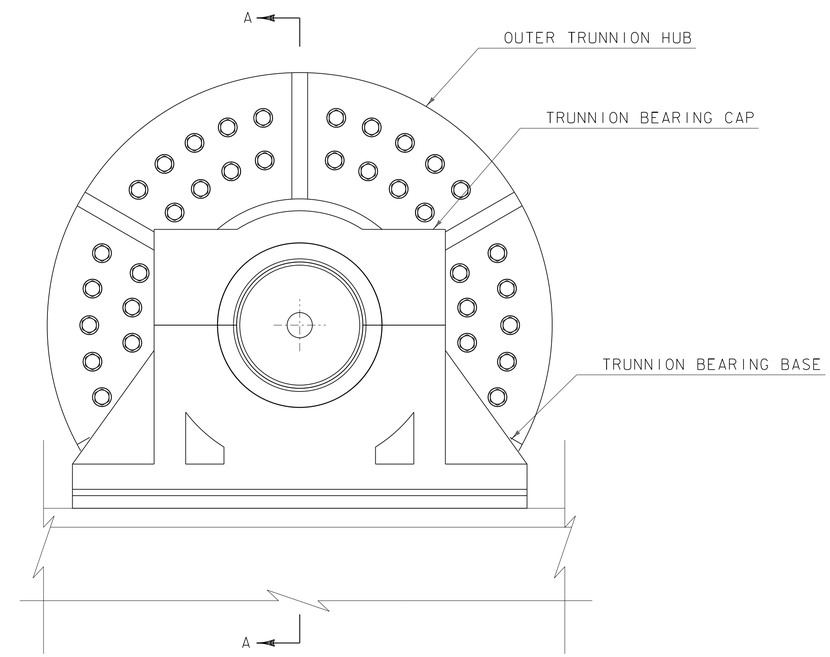

TRUNNION ASSEMBLY ELEVATION

SCALE 1/2" = 1'-0"

2 0 2

PROGRESS PLANS

HDR

PROJECT NAME: NORTH HERO GRAND ISLE BRIDGE

PROJECT NUMBER: BHF 028-1(26)

FILE NAME: z12b142supmach1.dgn

PROJECT LEADER: T. FRENCH

DESIGNED BY: C. MADDEN

TRUNNION ASSEMBLY

PLOT DATE: 4/25/2016

DRAWN BY: C. MADDEN

CHECKED BY: P. JAKUBICKI

SHEET 115 OF 196

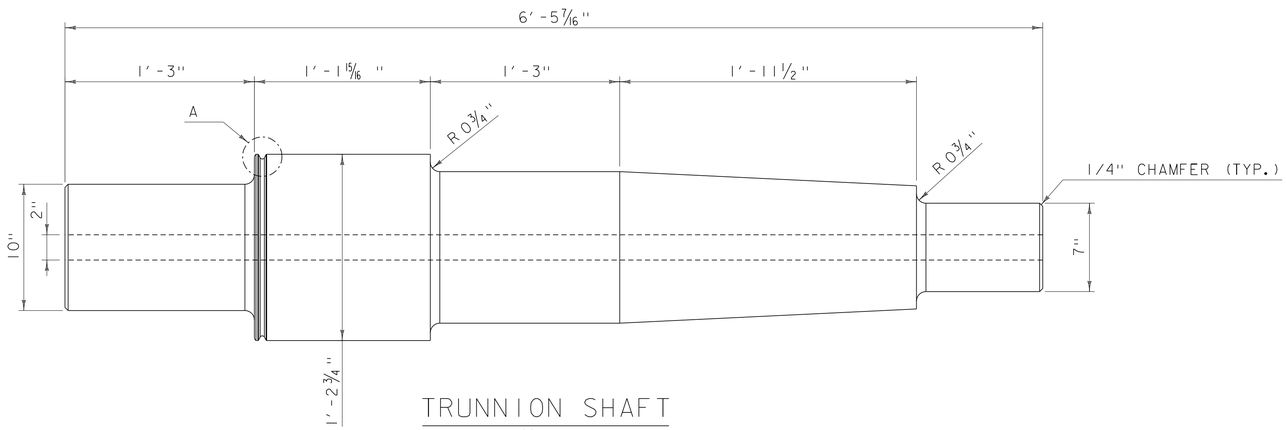

TRUNNION SHAFT

SCALE 1/2" = 1'-0"

2 0 2

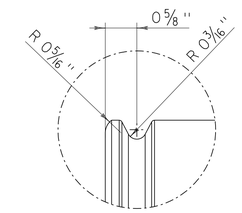

DETAIL A

SCALE 1/8" = 1'-0"

8 0 8

PROGRESS PLANS

HDR

PROJECT NAME: NORTH HERO GRAND ISLE BRIDGE
PROJECT NUMBER: BHF 028-1(26)

FILE NAME: z12b142supmach2.dgn
PROJECT LEADER: T. FRENCH
DESIGNED BY: C. MADDEN
TRUNNION DETAILS I

PLOT DATE: 4/25/2016
DRAWN BY: C. MADDEN
CHECKED BY: P. JAKUBICKI
SHEET 116 OF 196

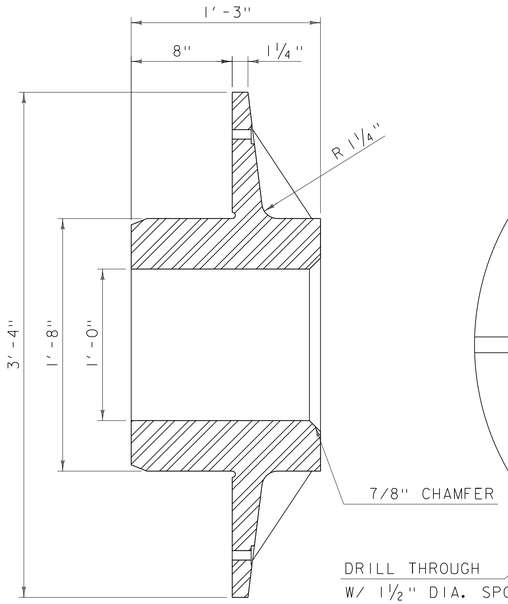

SECTION A-A

SCALE 1/2" = 1'-0"

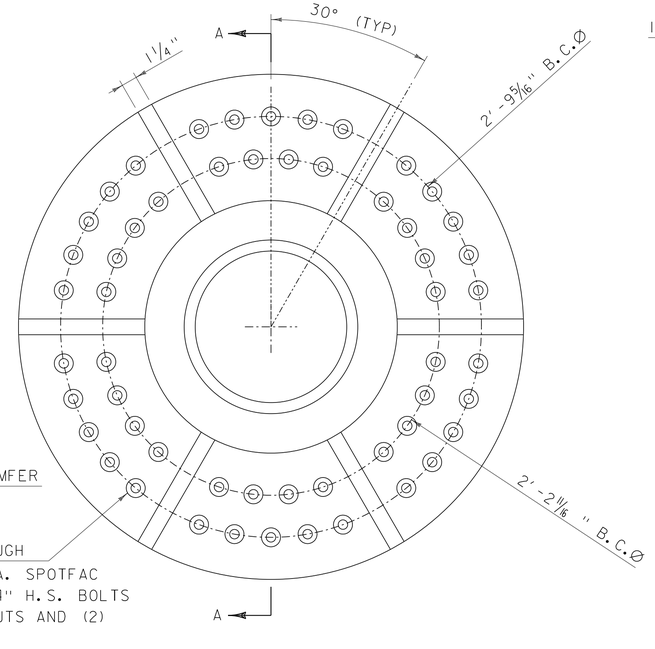

OUTER TRUNNION HUB

SCALE 1/2" = 1'-0"

SECTION B-B

SCALE 1/2" = 1'-0"

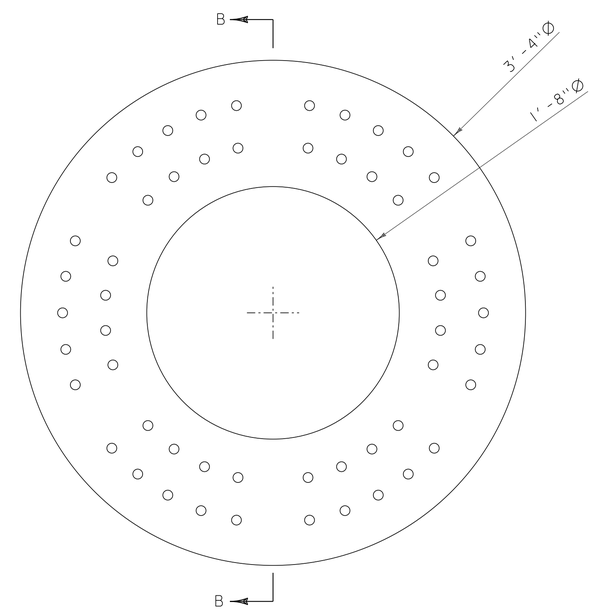

OUTER TRUNNION HUB

SCALE 1/2" = 1'-0"

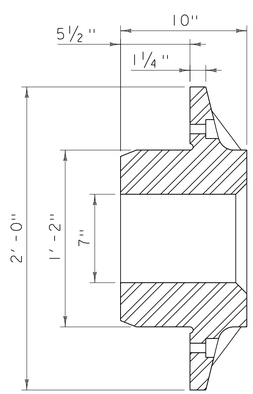

SECTION C-C

SCALE 1/2" = 1'-0"

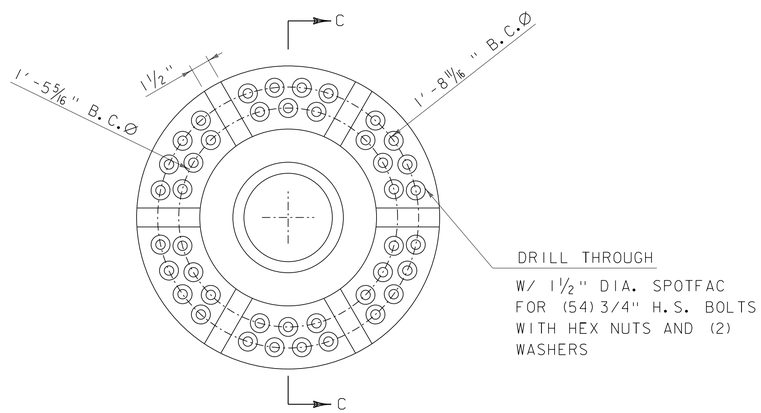

INNER TRUNNION HUB

SCALE 1/2" = 1'-0"

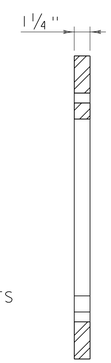

SECTION D-D

SCALE 1/2" = 1'-0"

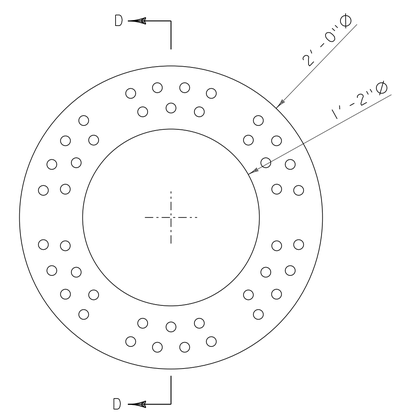

INNER TRUNNION HUB RING

SCALE 1/2" = 1'-0"

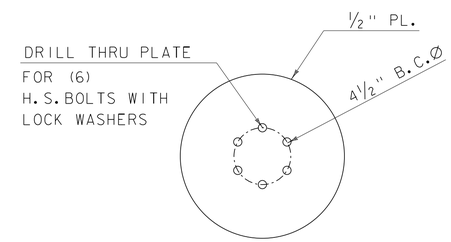

KEEPER PLATE

SCALE 1/2" = 1'-0"

PROGRESS PLANS

HDR

PROJECT NAME: NORTH HERO GRAND ISLE BRIDGE	
PROJECT NUMBER: BHF 028-1(26)	
FILE NAME: z12b142supmach3.dgn	PLOT DATE: 4/25/2016
PROJECT LEADER: T. FRENCH	DRAWN BY: C. MADDEN
DESIGNED BY: C. MADDEN	CHECKED BY: P. JAKUBICKI
TRUNNION DETAILS II	SHEET 117 OF 196

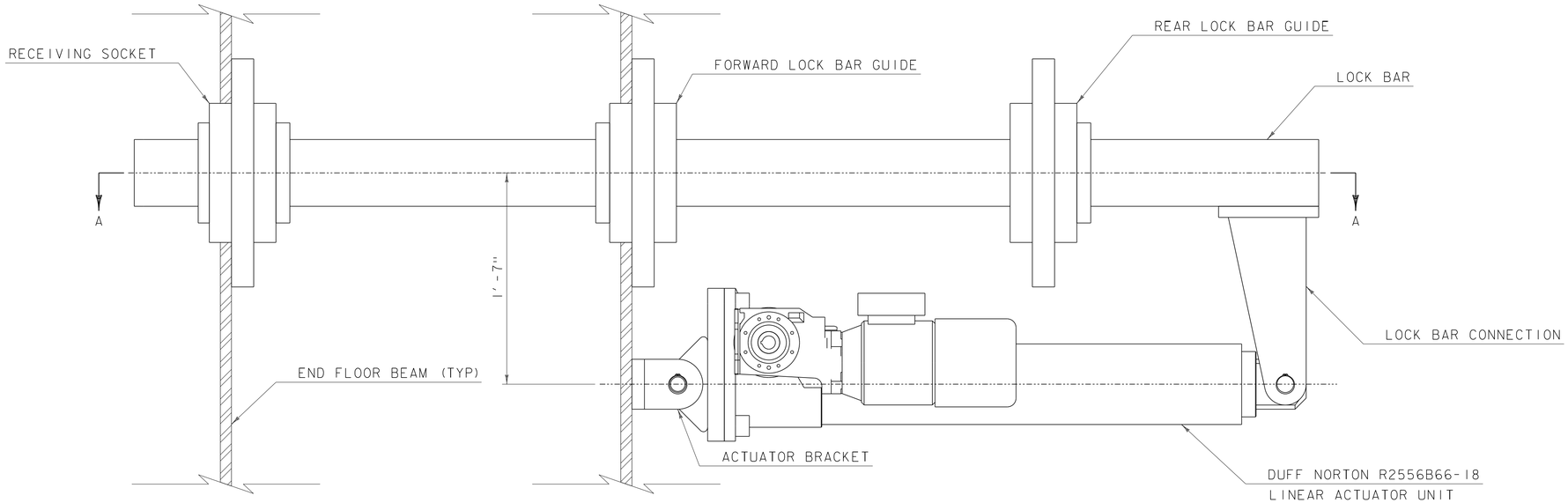

SPAN LOCK ASSEMBLY

SCALE 1/2" = 1'-0"

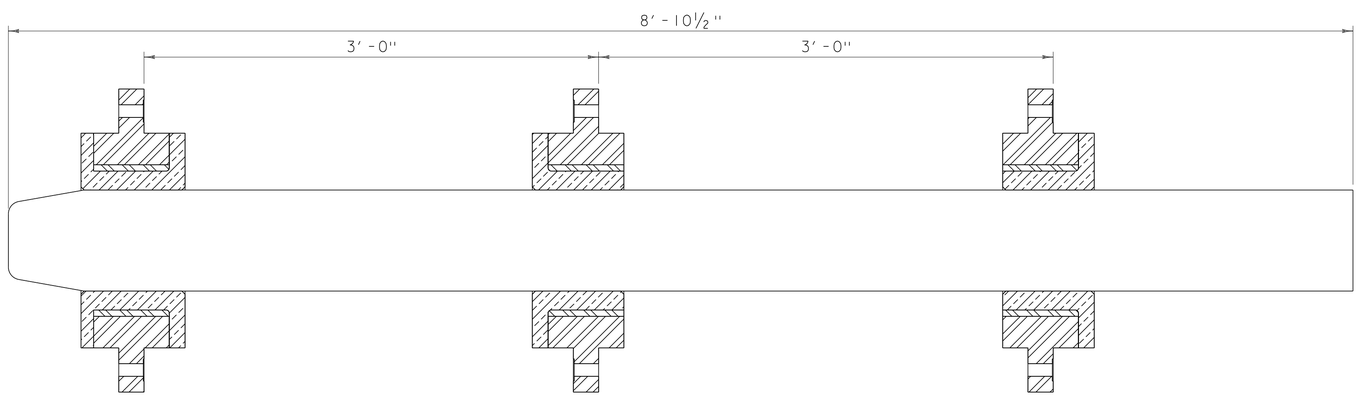

SECTION A-A

SCALE 1/2" = 1'-0"

BILL OF MATERIALS

NOTES:

1. SPAN LOCK MACHINERY TO BE MOUNTED ON A COMMON SUPPORT

PROGRESS PLANS

PROJECT NAME: NORTH HERO GRAND ISLE BRIDGE
PROJECT NUMBER: BHF 028-1(26)

FILE NAME: z12b142supmach4.dgn
PROJECT LEADER: T. FRENCH
DESIGNED BY: C. MADDEN
SPAN LOCK ASSEMBLY

PLOT DATE: 4/25/2016
DRAWN BY: C. MADDEN
CHECKED BY: P. JAKUBICKI
SHEET 118 OF 196

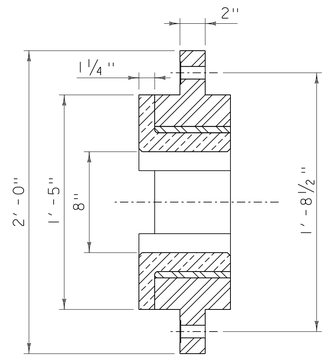

SECTION A-A

SCALE 1/2" = 1'-0"

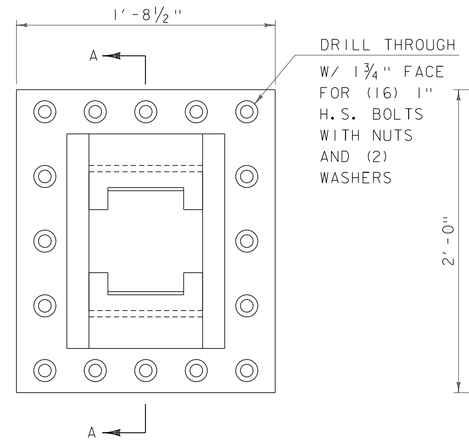

SPAN LOCK GUIDE

SCALE 1/2" = 1'-0"

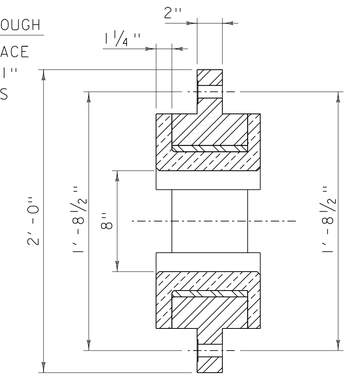

SECTION B-B

SCALE 1/2" = 1'-0"

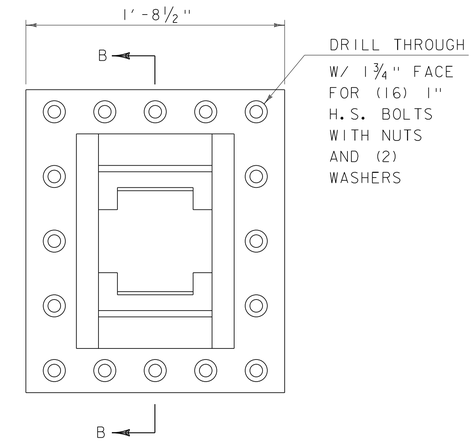

RECEIVING SOCKET

SCALE 1/2" = 1'-0"

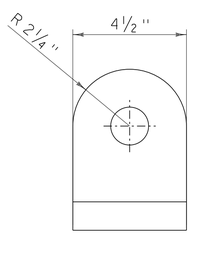

ACTUATOR PIVOT PIN

SCALE 1/4" = 1'-0"

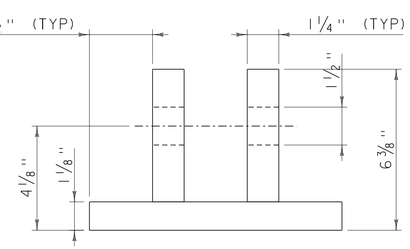

VIEW C-C

SCALE 1/4" = 1'-0"

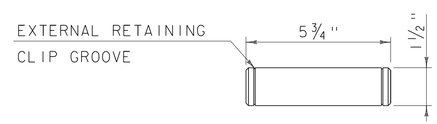

ACTUATOR PIVOT PIN

SCALE 1/4" = 1'-0"

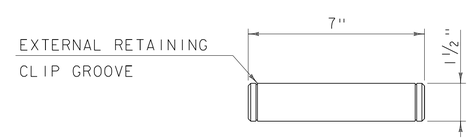

LOCK BAR CONNECTION PIN

SCALE 1/4" = 1'-0"

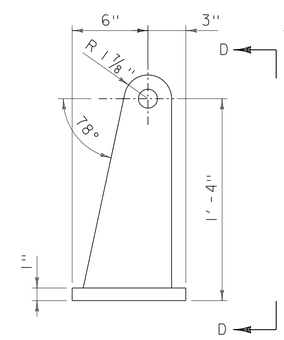

LOCK BAR CONNECTION

SCALE 1/2" = 1'-0"

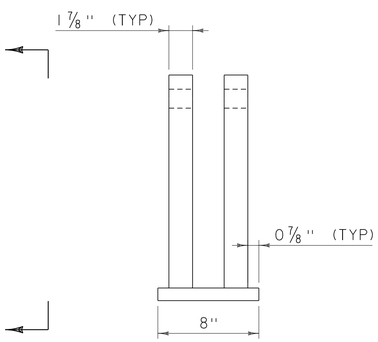

VIEW D-D

SCALE 1/2" = 1'-0"

PROGRESS PLANS

PROJECT NAME: NORTH HERO GRAND ISLE BRIDGE
PROJECT NUMBER: BHF 028-1(26)

FILE NAME: z12b142supmach5.dgn
PROJECT LEADER: T. FRENCH
DESIGNED BY: C. MADDEN
SPAN LOCK DETAILS

PLOT DATE: 4/25/2016
DRAWN BY: C. MADDEN
CHECKED BY: P. JAKUBICKI
SHEET 119 OF 196

NOTES

1. FOR LEGEND, ABBREVIATIONS, AND GENERAL NOTES, SEE SHEET NO. XXX.

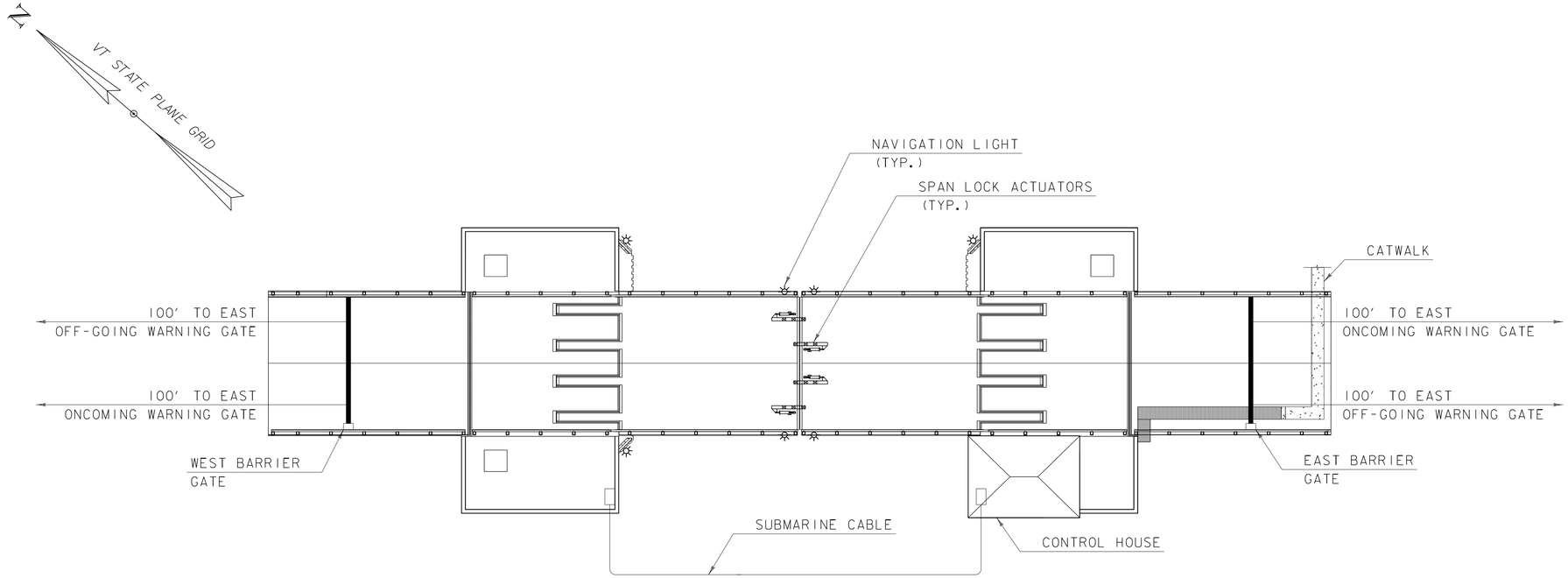

ELECTRICAL PLAN

SCALE 1/16" = 1'-0"

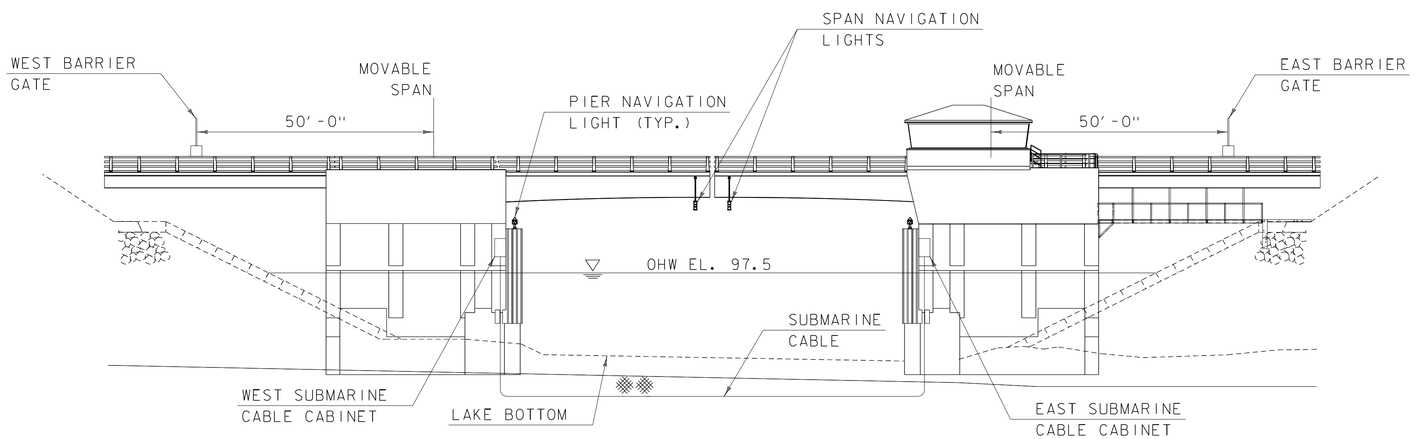

ELECTRICAL ELEVATION

SCALE 1/16" = 1'-0"

PROGRESS PLANS

PROJECT NAME: NORTH HERO GRAND ISLE BRIDGE	
PROJECT NUMBER: BHF 028-1(26)	
FILE NAME: zl2br142elecpe.dgn	PLOT DATE: 4/25/2016
PROJECT LEADER: T. FRENCH	DRAWN BY: R. DA SILVA
DESIGNED BY: Y. ADELEKAN	CHECKED BY: K. HAJJEH
ELECTRICAL PLAN & ELEVATION	SHEET 122 OF 196

NOTES

1. FOR LEGEND, ABBREVIATIONS, AND GENERAL NOTES, SEE SHEET NO. XXX

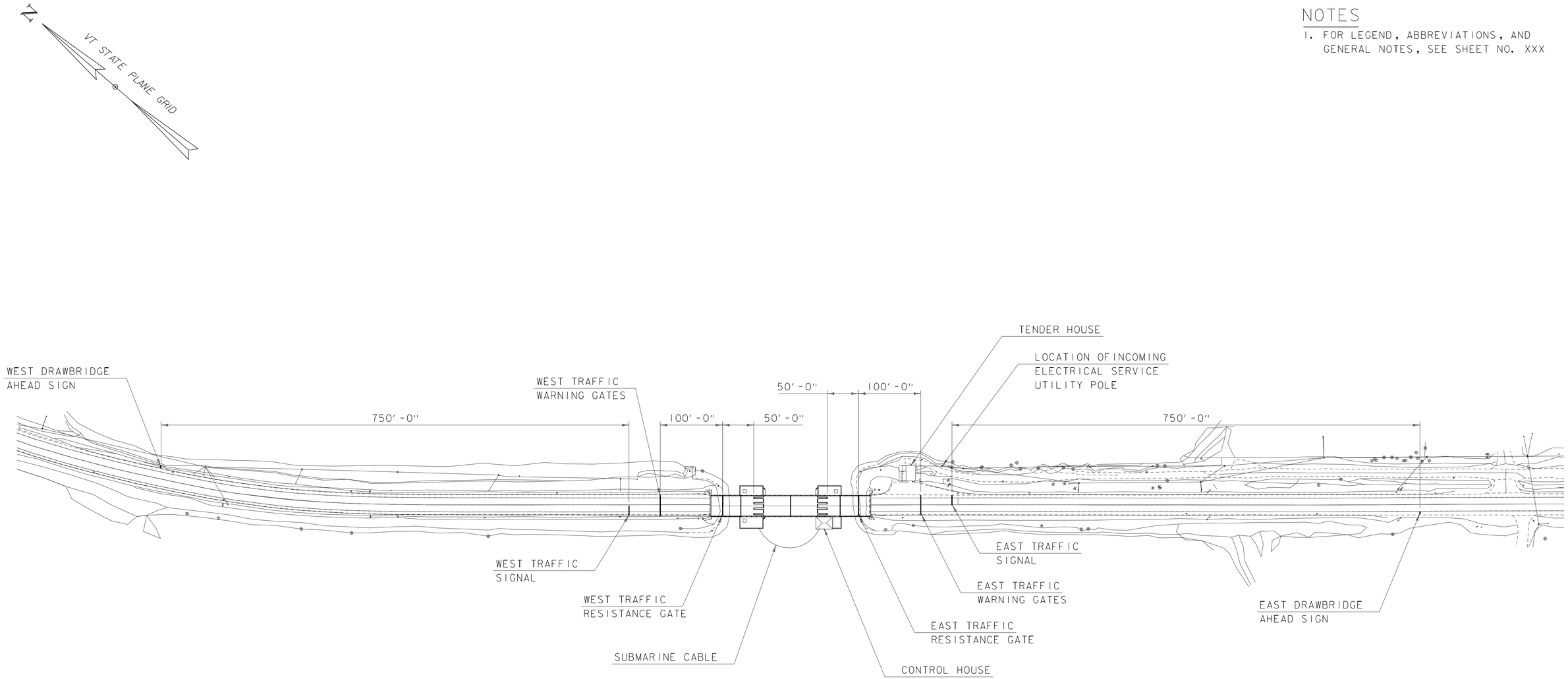

ELECTRICAL SITE PLAN

SCALE 1" = 80'-0"

80' 0 80'

PROGRESS PLANS

PROJECT NAME: NORTH HERO GRAND ISLE BRIDGE	
PROJECT NUMBER: BHF 028-1(26)	
FILE NAME: z12b142elecsite.dgn	PLOT DATE: 4/25/2016
PROJECT LEADER: T. FRENCH	DRAWN BY: R. DA SILVA
DESIGNED BY: Y. ADELEKAN	CHECKED BY: K. HAJJEH
ELECTRICAL SITE PLAN	SHEET 123 OF 196

NOTES

1. FOR LEGEND, ABBREVIATIONS, AND GENERAL NOTES, SEE SHEET NO. XXX

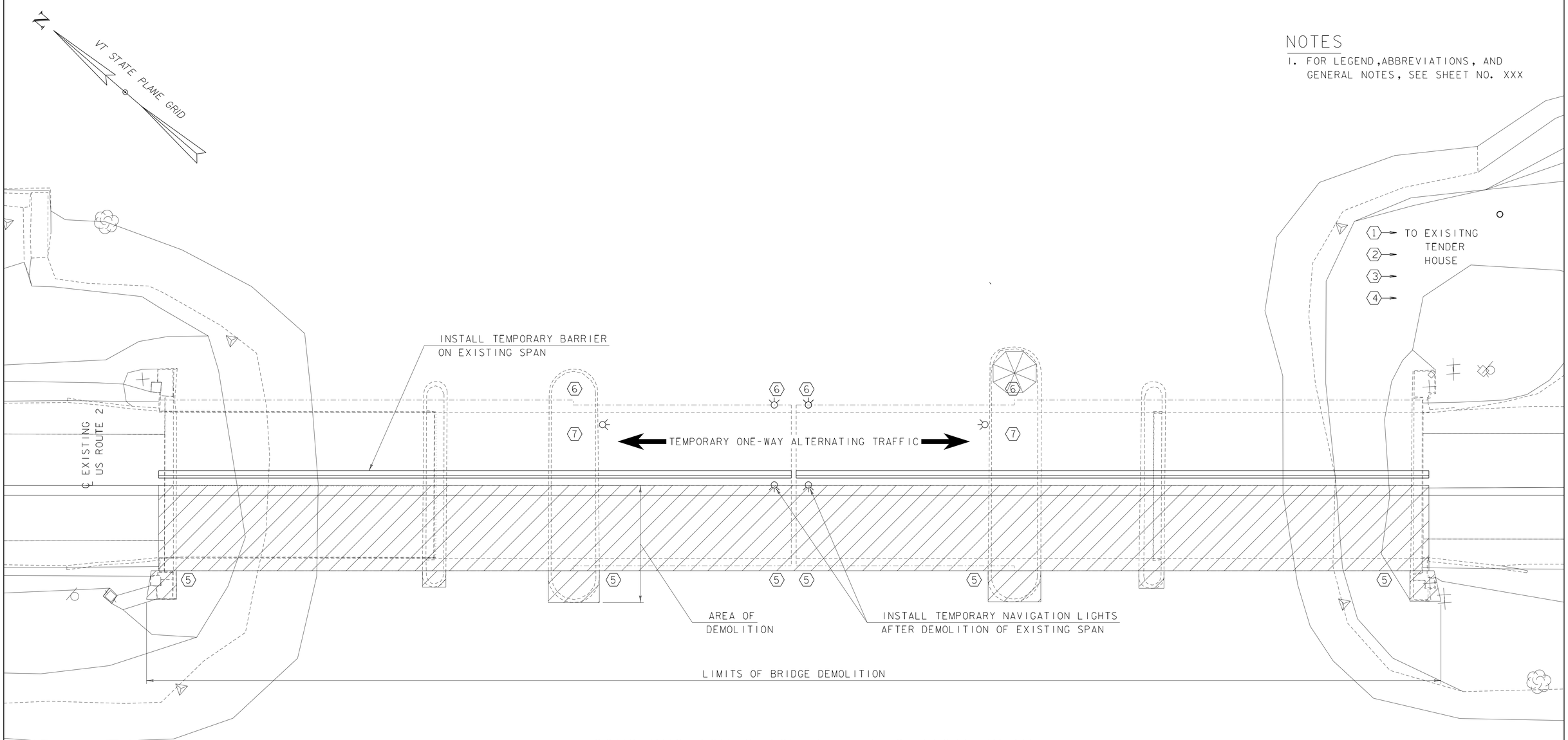

CONSTRUCTION STAGE 1 - ELECTRICAL PLAN

SCALE 1" = 10'-0"

1. DEMOLISH EXISTING GENERATOR AND GENERATOR EQUIPMENT
2. STRUCTURAL AND ARCHITECTURAL MODIFICATION OF THE TENDER HOUSE
3. INSTALL NEW ELECTRICAL SERVICE EQUIPMENT, ATS, GENERATOR, CONDUIT/DUCT BANK, RISER, CT CABINET/METERING
4. INSTALL NEW UTILITY TRANSFORMER AND COMMISION NEW ELECTRIC SERVICE
5. DEMOLISH SOUTH HALF OF BRIDGE
   - DEMOLISH SW SND SE NAVIGATION LIGHTS
   - DEMOLISH SW AND SE TRAFFIC WARNING GATES
   - DEMOLISH SW TRAFFIC LIGHT
6. INSTALL TEMPORARY OPERATING SYSTEM IN NORTH HALF OF BRIDGE
   - INSTALL TEMPORARY NAVIGATION LIGHTING
   - RELOCATE INSTRUMENTATION DEVICES FOR TEMPORARY OPERATION OF NORTH LEAVES
7. COMMISSION OPERATION OF NORTH HALF USING THE TEMPORARY OPERATING SYSTEM

PROGRESS PLANS

HDR

PROJECT NAME: NORTH HERO GRAND ISLE BRIDGE	
PROJECT NUMBER: BHF 028-1(26)	
FILE NAME: z12b142const1.dgn	PLOT DATE: 4/25/2016
PROJECT LEADER: T. FRENCH	DRAWN BY: S. SCHULMAN
DESIGNED BY: Y. ADELEKAN	CHECKED BY: K. HAJJEH
CONSTRUCTION STAGE 1 ELECTRICAL PLAN	SHEET 124 OF 196

NOTES

1. FOR LEGEND, ABBREVIATIONS, AND GENERAL NOTES, SEE SHEET NO. XXX

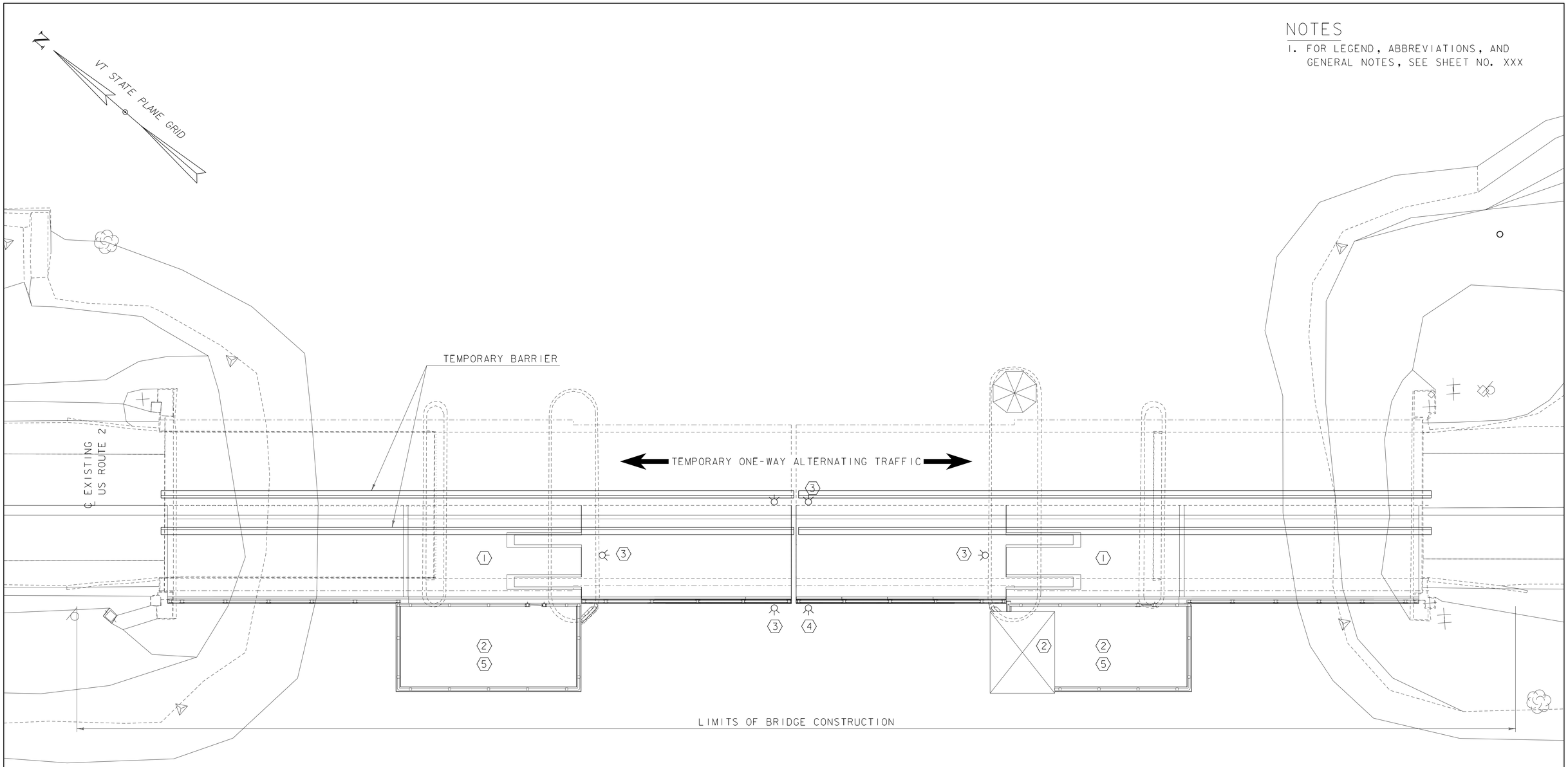

CONSTRUCTION STAGE 2 - ELECTRICAL PLAN

SCALE 1" = 10'-0"

1. STRUCTURAL CONSTRUCTION OF SOUTH HALF (PIER, ROADWAY AND ROOMS)
2. INSTALL NEW ELECTRICAL AND HYDRAULIC EQUIPMNET ON SOUTH HALF
3. INSTALL TEMPORARY NAVIGATION LIGHTIING ON SOUTH HALF
4. INSTALL NEW SUBMARINE CABLE ON SOUTH SIDE
5. COMMISSION OPERATION OF SOUTH HALF USING THE HYDRAULIC SYSTEM

PROGRESS PLANS

HDR

PROJECT NAME: NORTH HERO GRAND ISLE BRIDGE	
PROJECT NUMBER: BHF 028-1(26)	
FILE NAME: z12b142const2.dgn	PLOT DATE: 4/25/2016
PROJECT LEADER: T. FRENCH	DRAWN BY: S. SCHULMAN
DESIGNED BY: Y. ADELEKAN	CHECKED BY: K. HAJJEH
CONSTRUCTION STAGE 2 ELECTRICAL PLAN	SHEET 125 OF 196

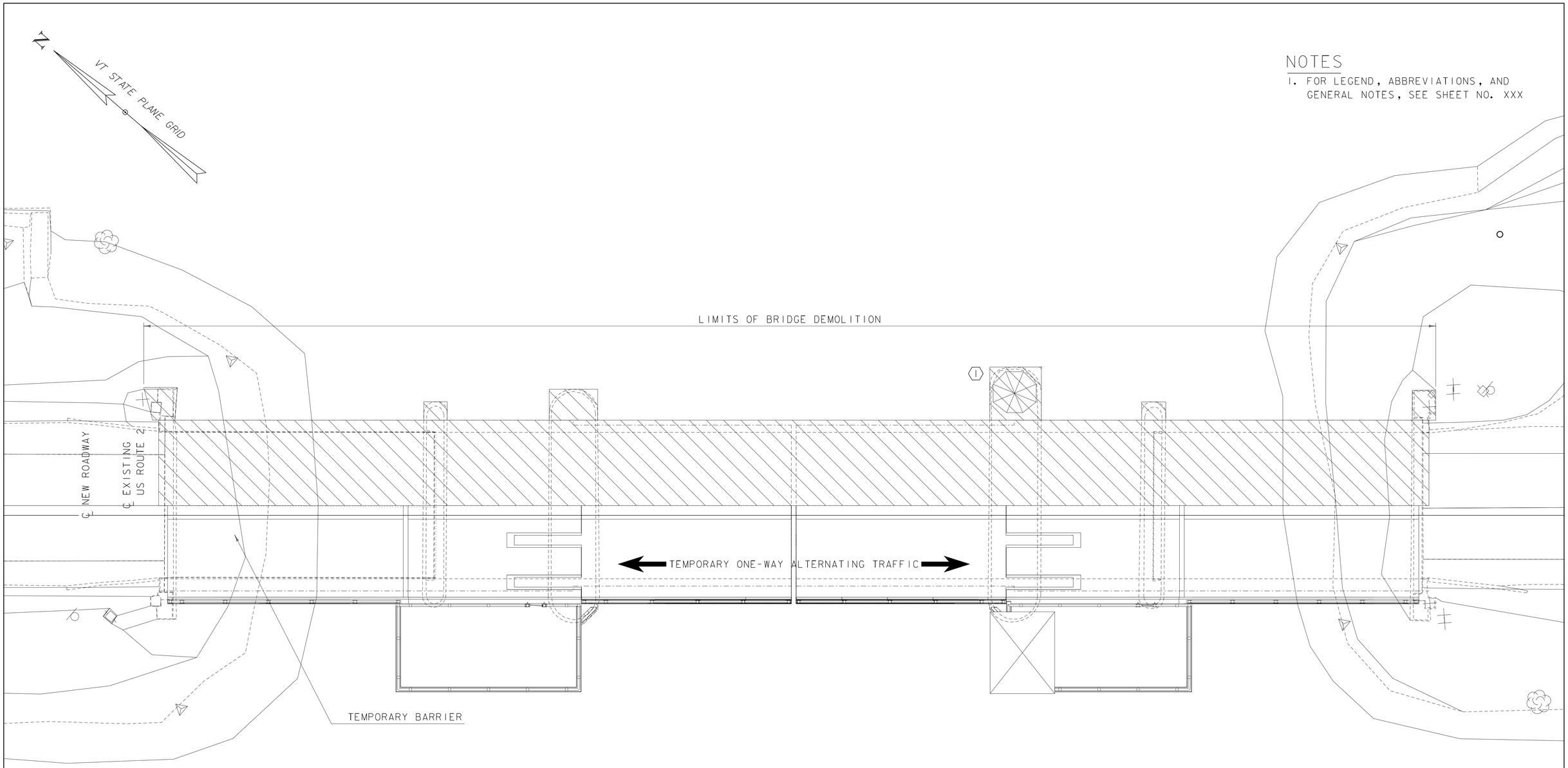

NOTES

1. FOR LEGEND, ABBREVIATIONS, AND GENERAL NOTES, SEE SHEET NO. XXX

(1) DEMOLISH NORTH HALF
- DEMOILISH TEMPORARY OPERATING SYSTEM
- DEMOILISH EXISITNG BRIDGE CONTROL SYSTEM

CONSTRUCTION STAGE 3 - ELECTRICAL PLAN

SCALE 1" = 10'-0"
1' 0 1'

PROGRESS PLANS

HDR

PROJECT NAME: NORTH HERO GRAND ISLE BRIDGE	
PROJECT NUMBER: BHF 028-1(26)	
FILE NAME: z12b142const3.dgn	PLOT DATE: 4/25/2016
PROJECT LEADER: T. FRENCH	DRAWN BY: S. SCHULMAN
DESIGNED BY: Y. ADELEKAN	CHECKED BY: K. HAJJEH
CONSTRUCTION STAGE 3 ELECTRICAL PLAN	SHEET 126 OF 196

NOTES

1. FOR LEGEND ABBREVIATION AND GENERAL NOTES, SEE SHEET NO. XX.

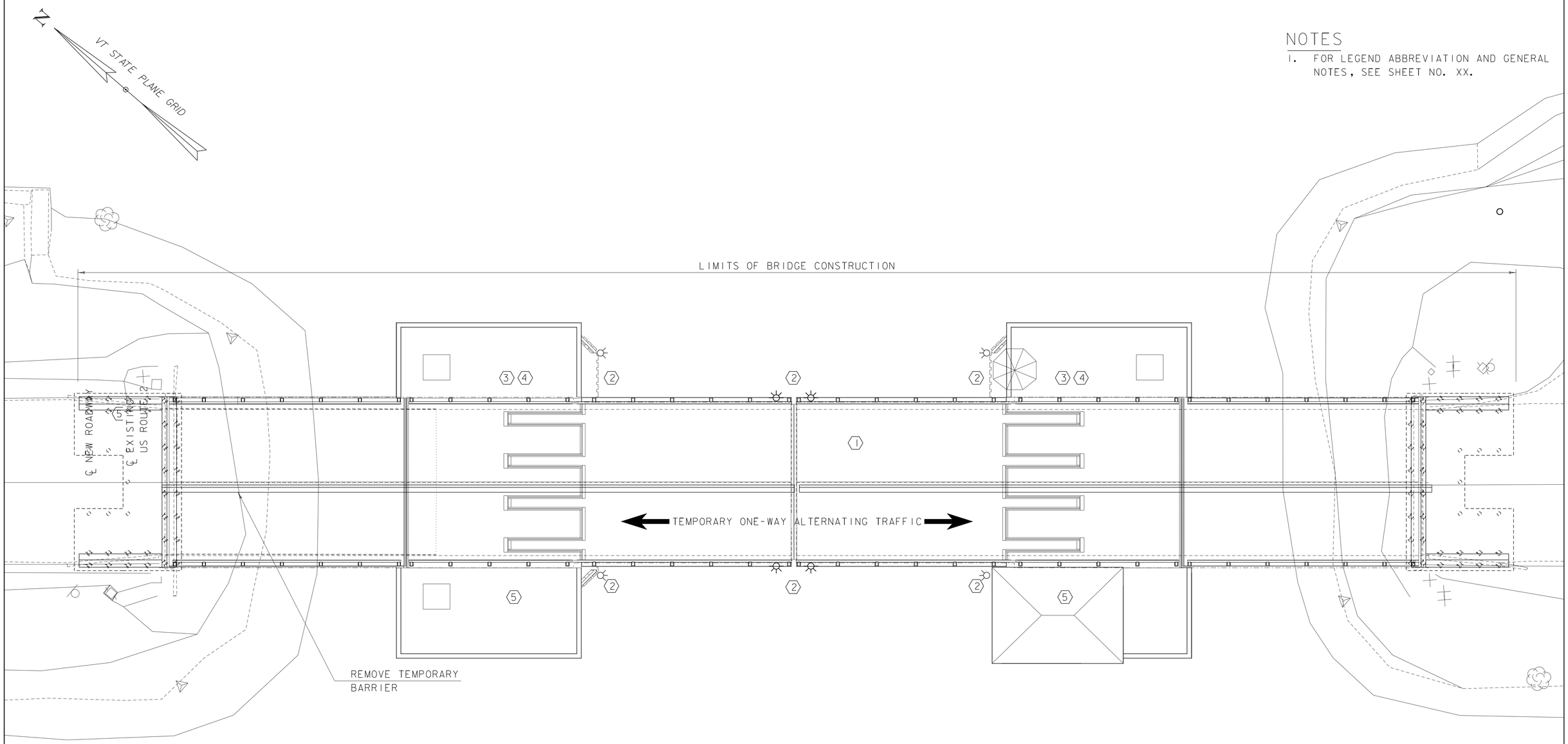

1. STRUCTURAL CONSTRUCTION OF NORTH HALF (PIER, ROADWAY AND ROOMS)
2. INSTALL PERMANENT NAVIGATION LIGHTING SYSTEM
3. EXTEND ELECTRICAL AND HYDRAULIC EQUIPMNET TO NORTH HALF OF THE BRIDGE
4. EXTEND ELECTRICAL POWER TO NORTH HALF OF THE BRIDGE
5. COMMISSION FULL BRIDGE OPERATION USING THE HYDRAULIC SYSTEM

CONSTRUCTION STAGE 4 - ELECTRICAL PLAN

SCALE 1" = 10'-0"

1' 0 1'

PROGRESS PLANS

PROJECT NAME: NORTH HERO GRAND ISLE BRIDGE	
PROJECT NUMBER: BHF 028-1(26)	
FILE NAME: z12b142const4.dgn	PLOT DATE: 4/25/2016
PROJECT LEADER: T. FRENCH	DRAWN BY: S. SCHULMAN
DESIGNED BY: Y. ADELEKAN	CHECKED BY: K. HAJJEH
CONSTRUCTION STAGE 4 ELECTRICAL PLAN	SHEET 127 OF 196

NOTES

1. FOR LEGEND, ABBREVIATIONS, AND GENERAL NOTES, SEE SHEET NO. XXX

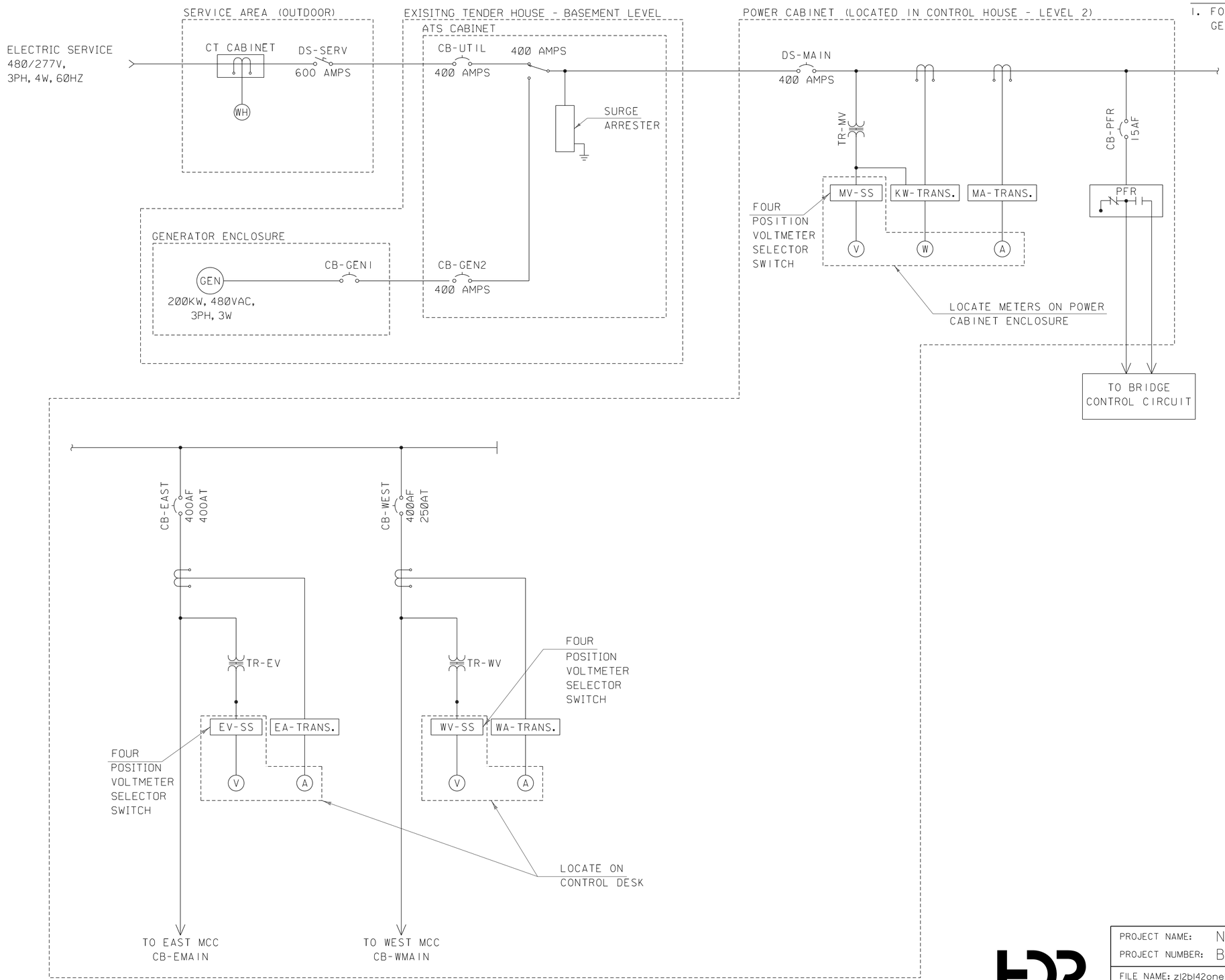

PROGRESS PLANS

PROJECT NAME:	NORTH HERO GRAND ISLE BRIDGE
PROJECT NUMBER:	BHF 028-1(26)

FILE NAME: zl2bl42onelinel.dgn	PLOT DATE: 4/25/2016
PROJECT LEADER: T. FRENCH	DRAWN BY: R. DA SILVA
DESIGNED BY: Y. ADELEKAN	CHECKED BY: K. HAJJEH
ONE LINE DIAGRAM 1 OF 2	SHEET 128 OF 196

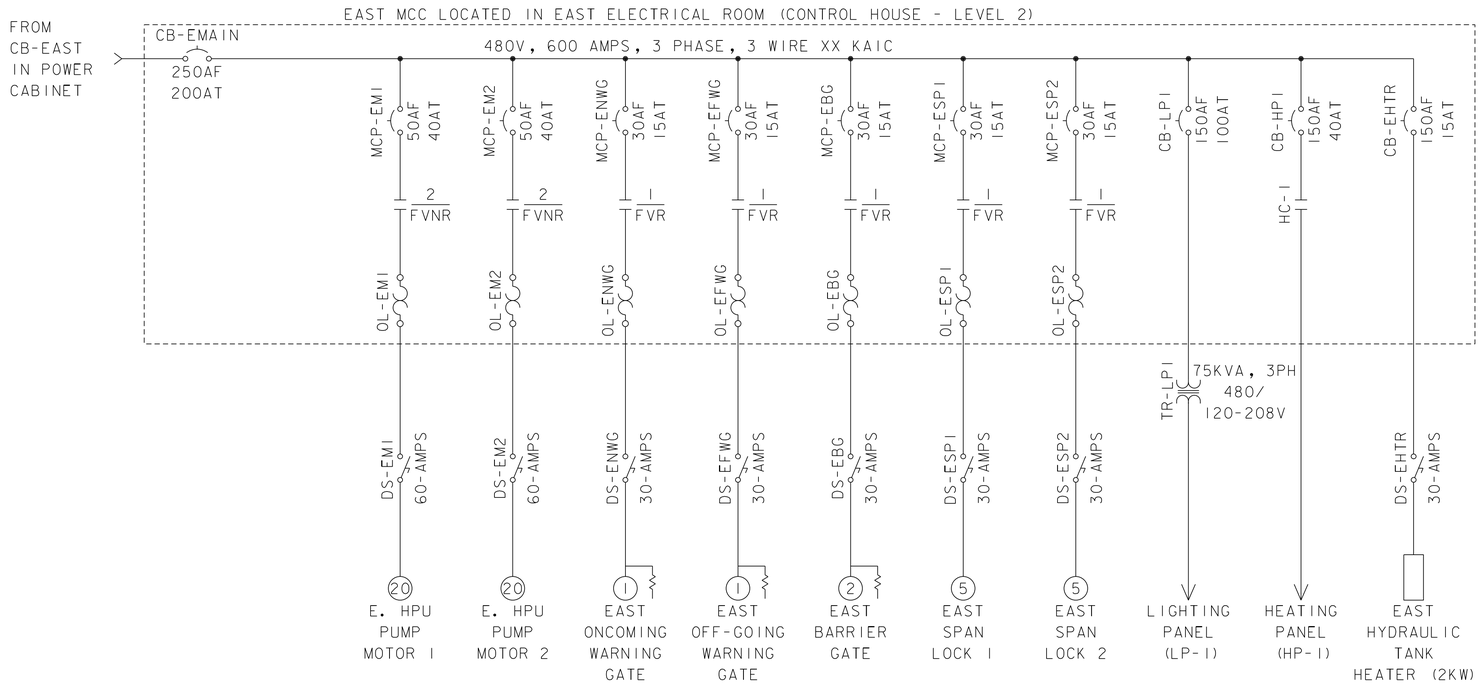

NOTES

1. FOR LEGEND, ABBREVIATIONS, AND GENERAL NOTES, SEE SHEET NO. XXX

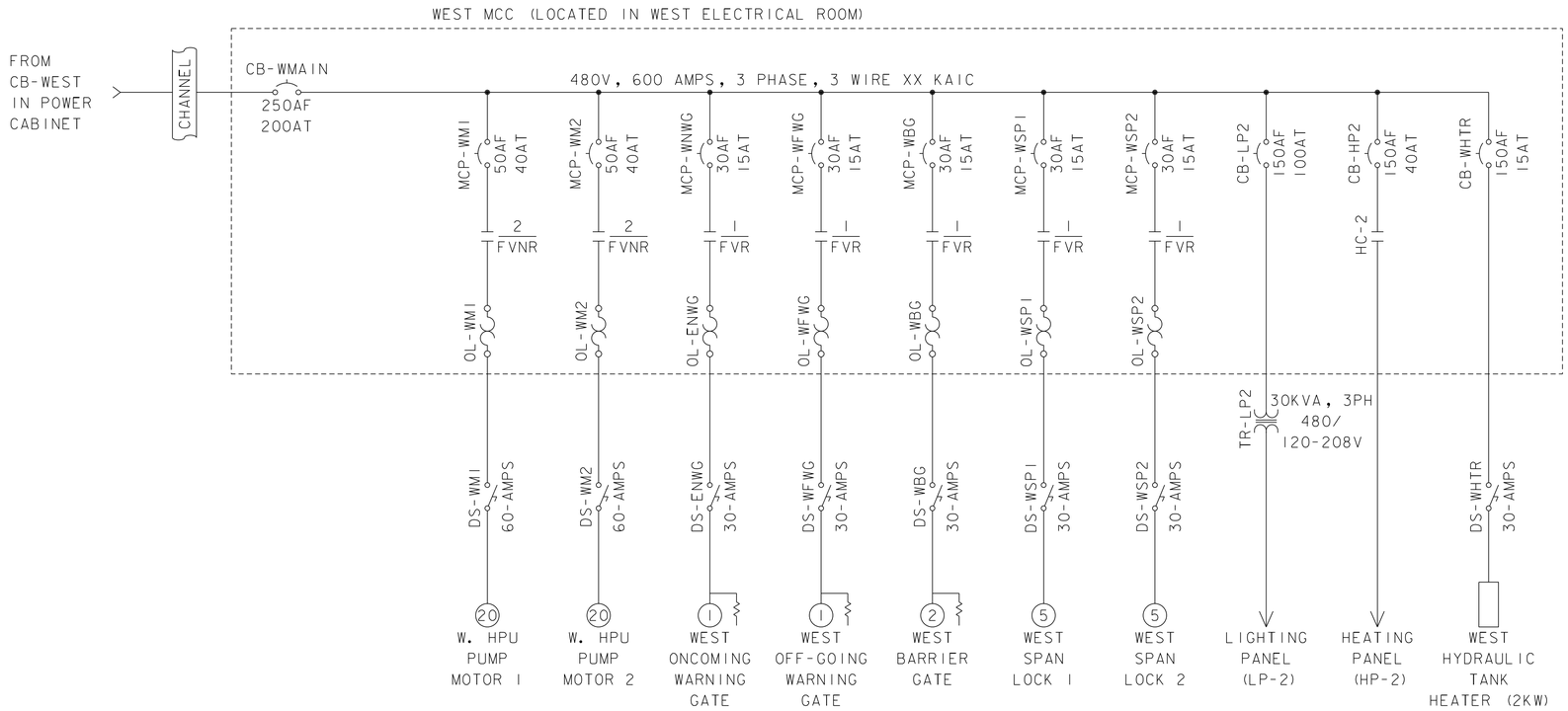

PROGRESS PLANS

PROJECT NAME: NORTH HERO GRAND ISLE BRIDGE	
PROJECT NUMBER: BHF 028-1(26)	
FILE NAME: zl2bl42oneline2.dgn	PLOT DATE: 4/25/2016
PROJECT LEADER: T. FRENCH	DRAWN BY: R. DA SILVA
DESIGNED BY: Y. ADELEKAN	CHECKED BY: K. HAJJEH
ONE LINE DIAGRAM 2 OF 2	SHEET 129 OF 196

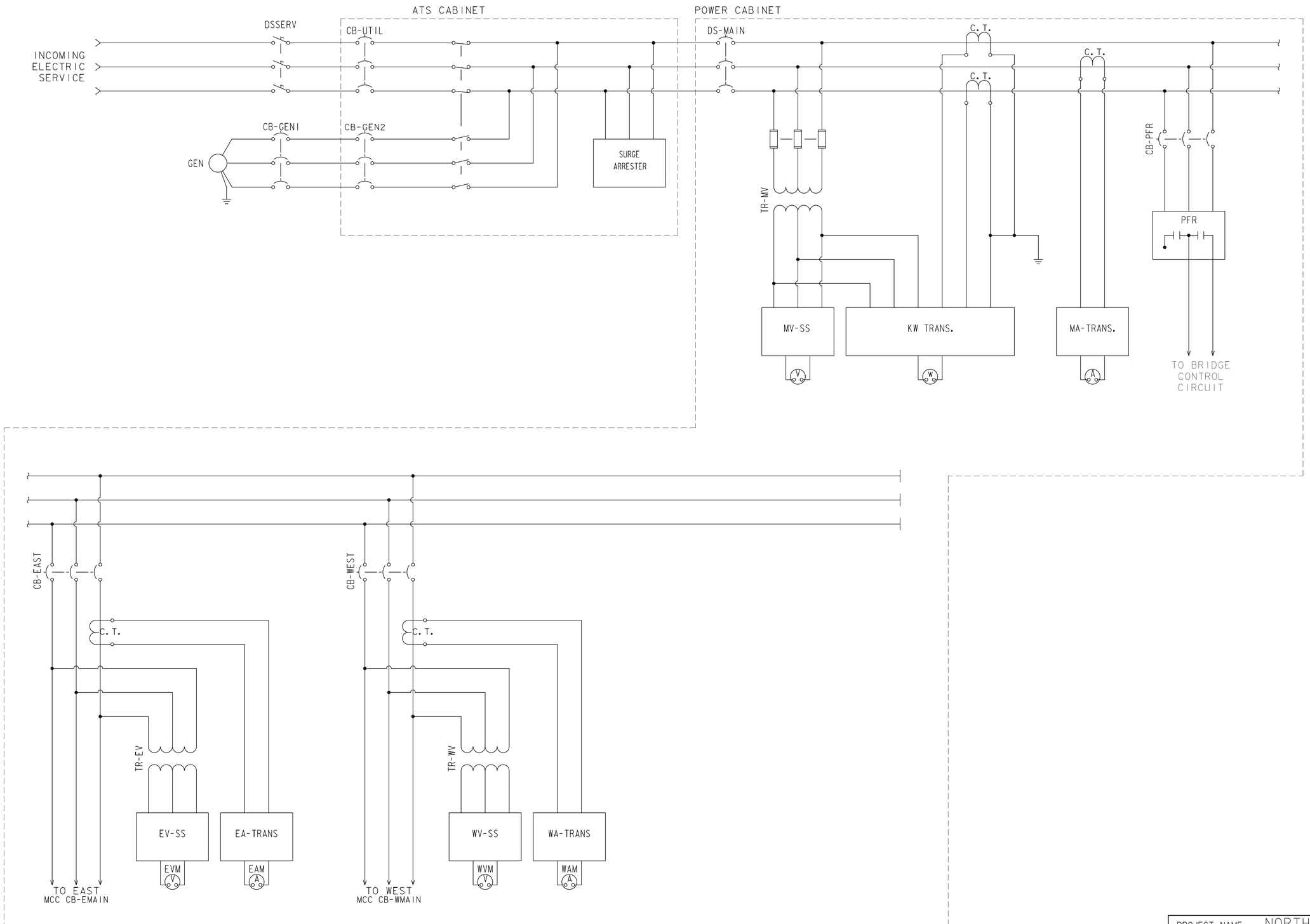

THREE LINE DIAGRAM

PROGRESS PLANS

PROJECT NAME: NORTH HERO GRAND ISLE BRIDGE
PROJECT NUMBER: BHF 028-1(26)

FILE NAME: z12b142cntrls01.dwg
PROJECT LEADER: T. FRENCH
DESIGNED BY: Y. ADELEKAN
CONTROL SCHEMATIC 1

PLOT DATE: 4/29/2016
DRAWN BY: R. DA SILVA
CHECKED BY: K. HAJJEH
SHEET 130 OF 196

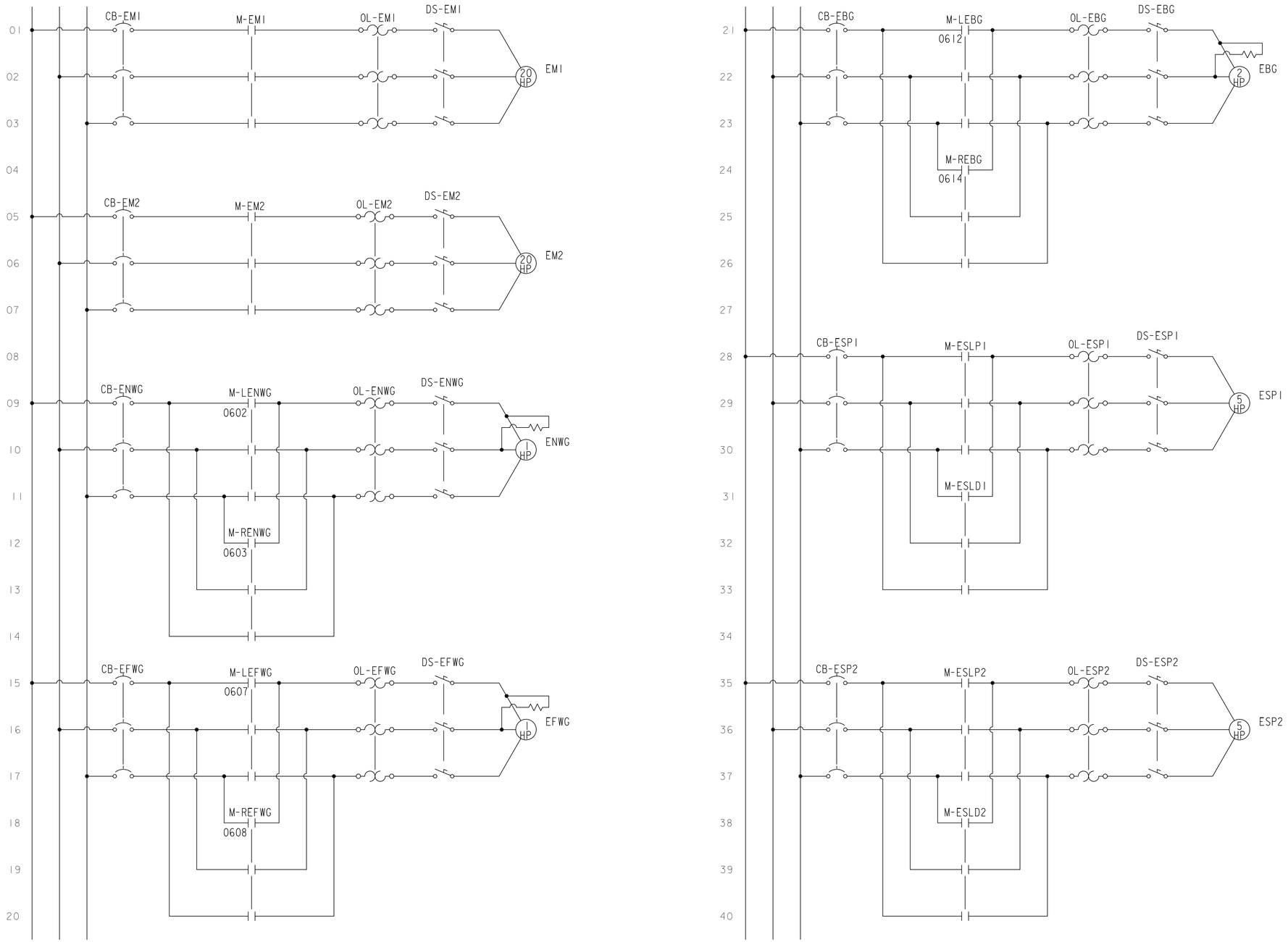

EAST MCC THREE LINE DIAGRAM

PROGRESS PLANS

PROJECT NAME: NORTH HERO GRAND ISLE BRIDGE
PROJECT NUMBER: BHF 028-1(26)

FILE NAME: z12b142cntrls02.dwg
PROJECT LEADER: T. FRENCH
DESIGNED BY: Y. ADELEKAN
CONTROL SCHEMATIC 2

PLOT DATE: 4/29/2016
DRAWN BY: R. DA SILVA
CHECKED BY: K. HAJJEH
SHEET 131 OF 196

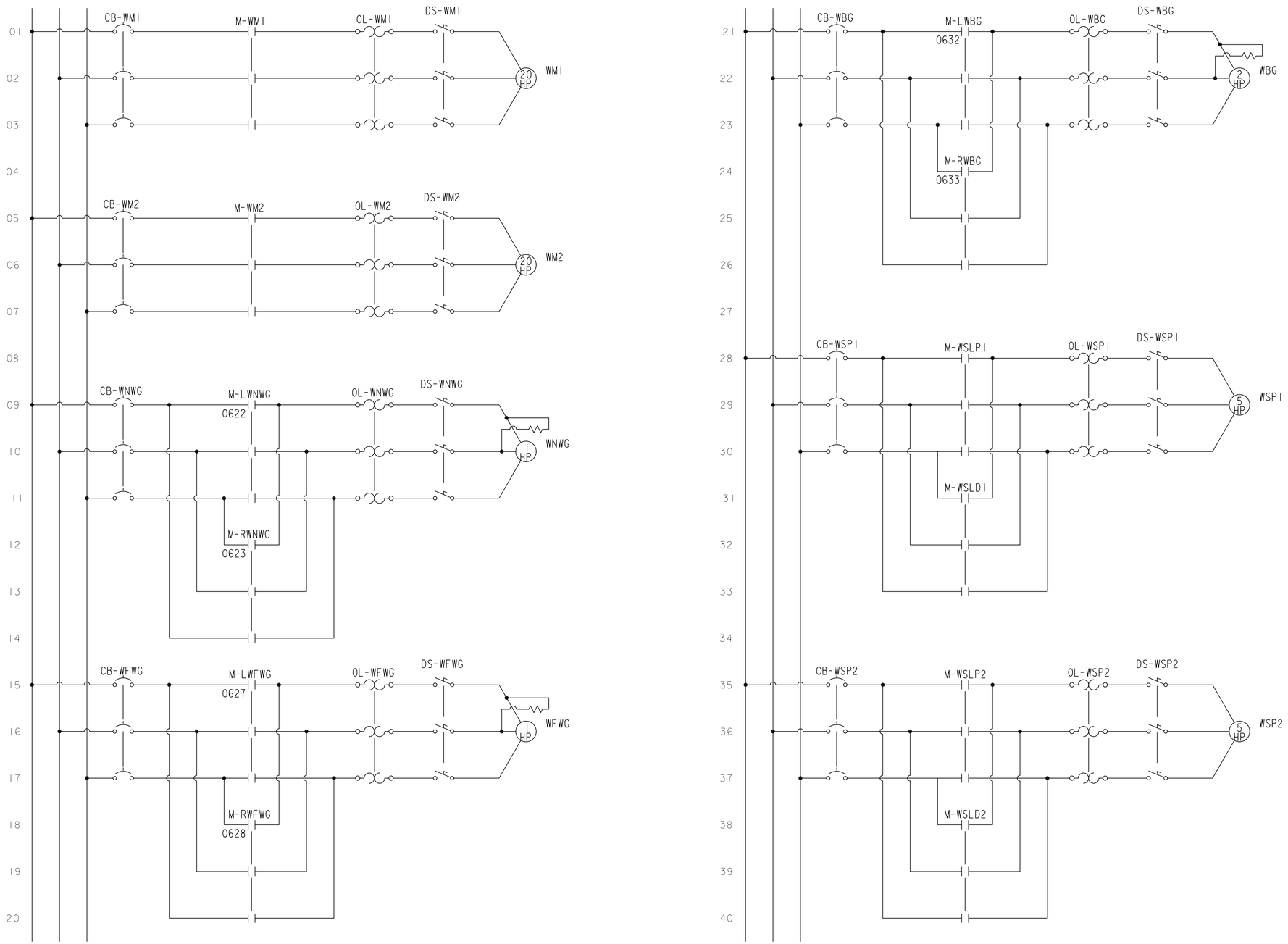

WEST MCC THREE LINE DIAGRAM

PROGRESS PLANS

PROJECT NAME: NORTH HERO GRAND ISLE BRIDGE
PROJECT NUMBER: BHF 028-1(26)

FILE NAME: zl2bl42cntrls03.dwg
PROJECT LEADER: T. FRENCH
DESIGNED BY: Y. ADELEKAN
CONTROL SCHEMATIC 3

PLOT DATE: 4/29/2016
DRAWN BY: R. DA SILVA
CHECKED BY: K. HAJJEH
SHEET 132 OF 196

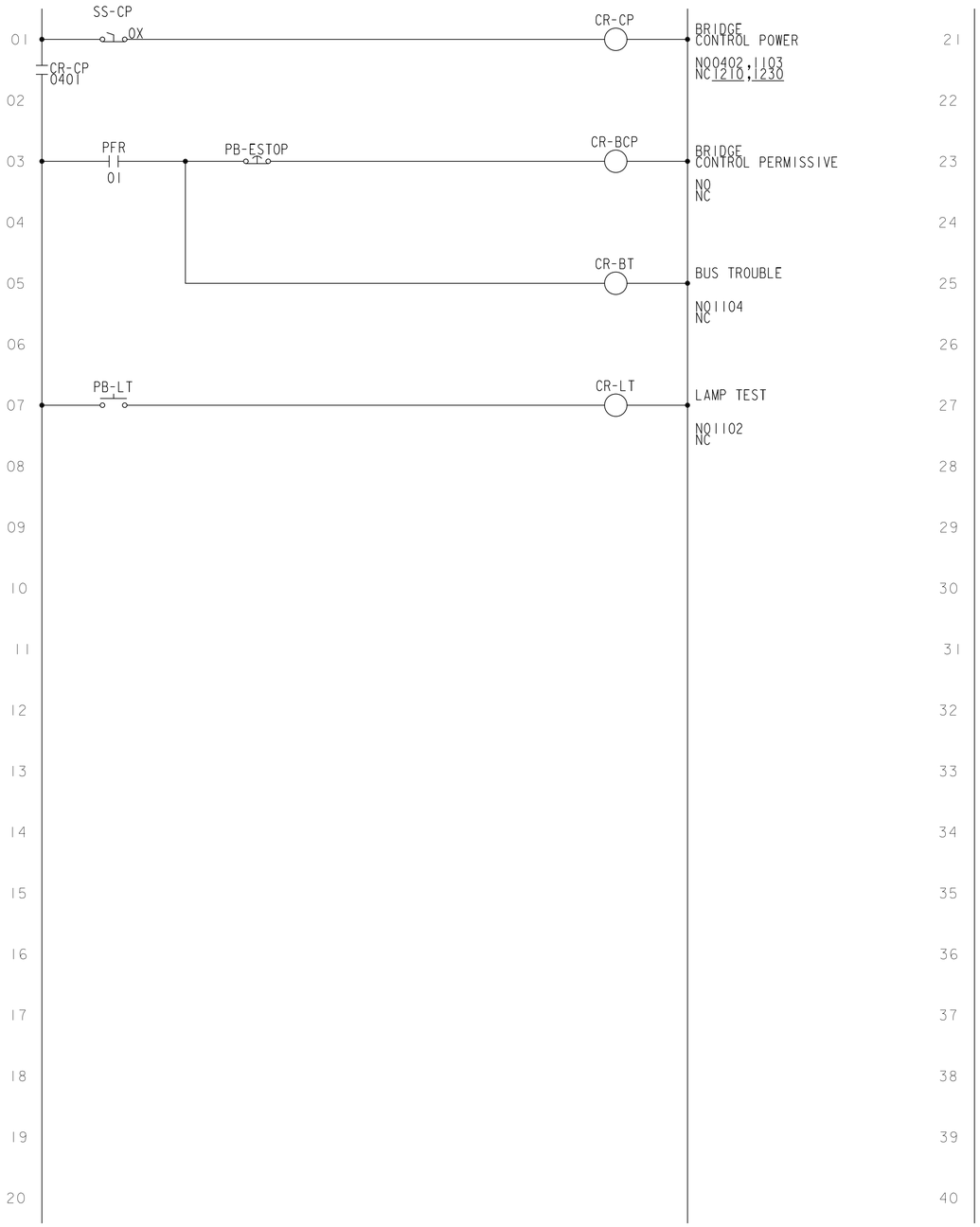

PROGRESS PLANS

PROJECT NAME: NORTH HERO GRAND ISLE BRIDGE
PROJECT NUMBER: BHF 028-1(26)

FILE NAME: z12b142cntrls04.dwg
PROJECT LEADER: T. FRENCH
DESIGNED BY: Y. ADELEKAN
CONTROL SCHEMATIC 4

PLOT DATE: 4/29/2016
DRAWN BY: R. DA SILVA
CHECKED BY: K. HAJJEH
SHEET 133 OF 196

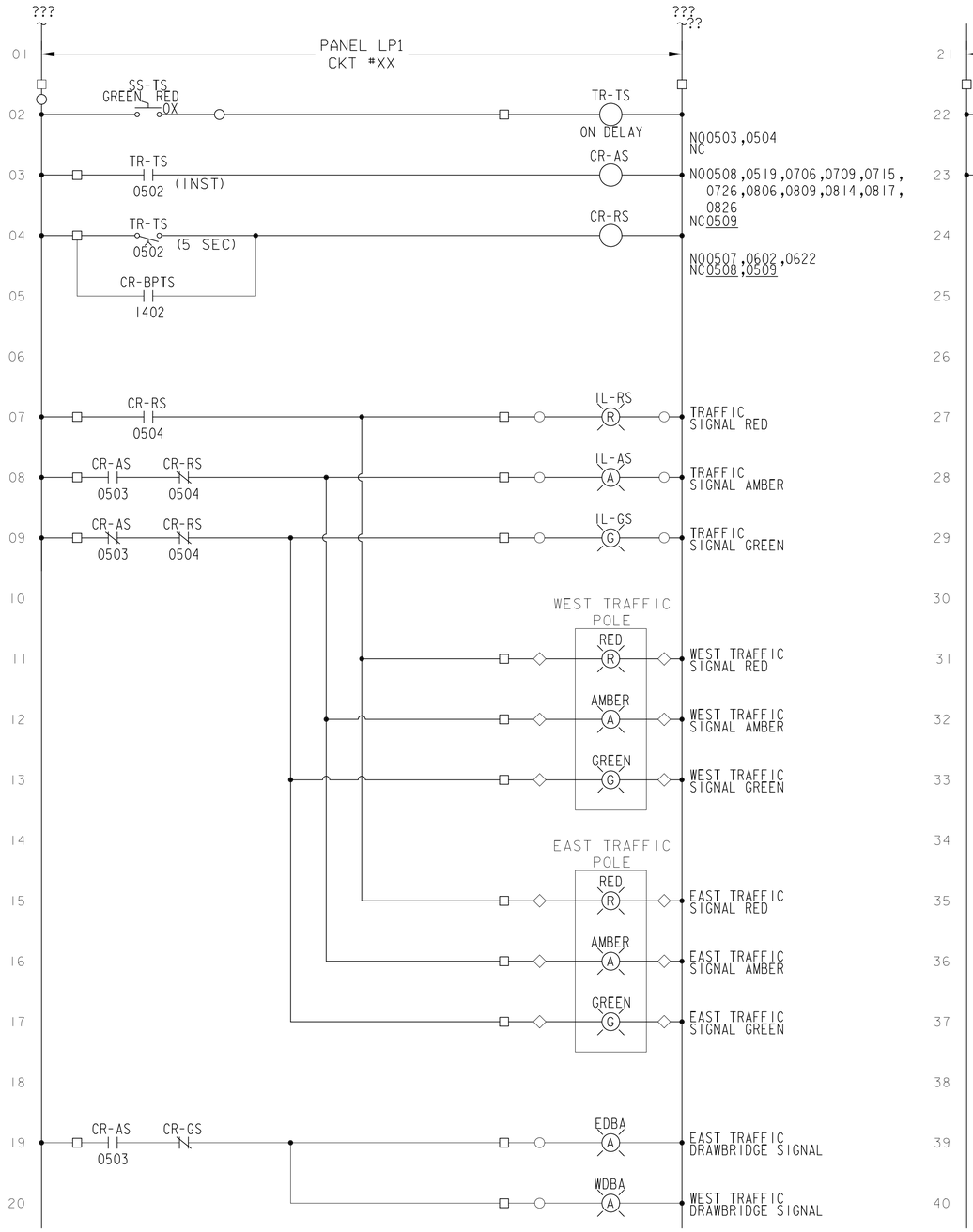

TRAFFIC CONTROL

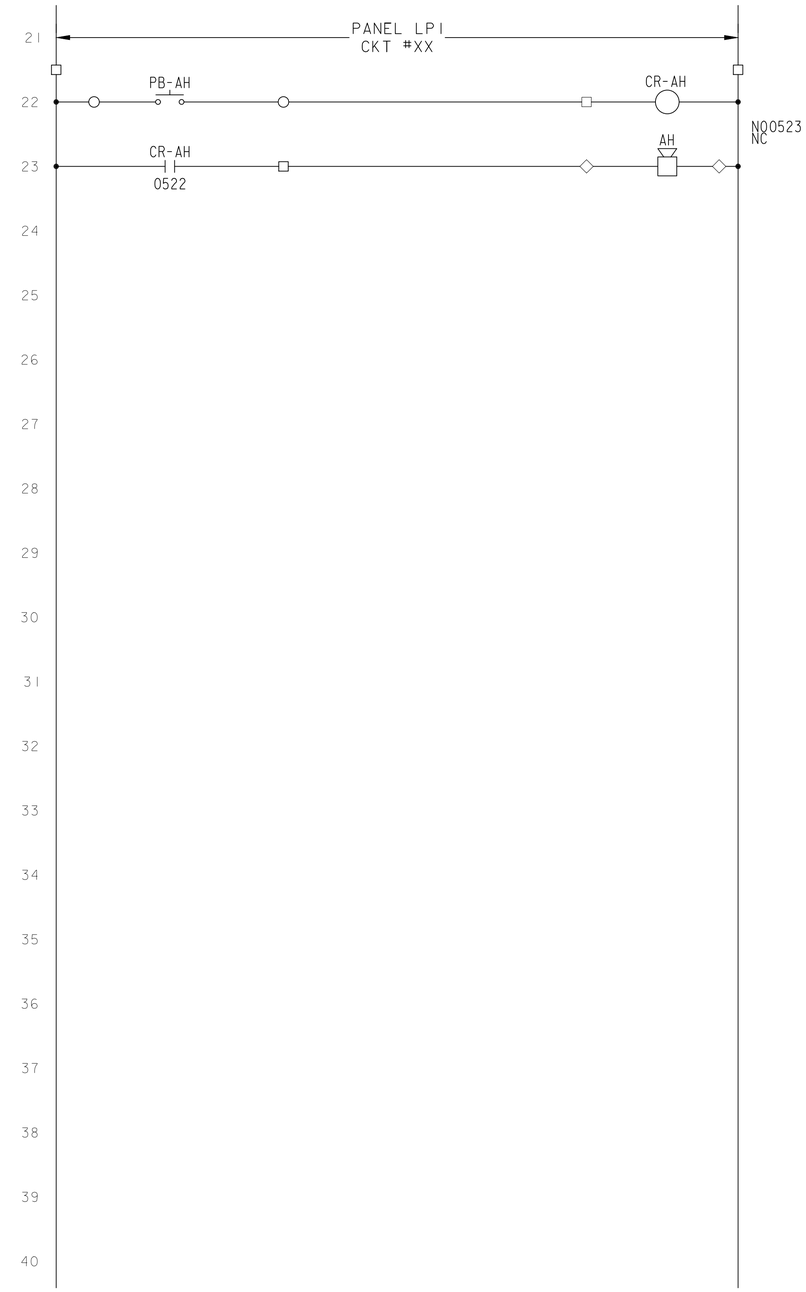

AIR HORN

PROGRESS PLANS

PROJECT NAME: NORTH HERO GRAND ISLE BRIDGE
PROJECT NUMBER: BHF 028-1(26)

FILE NAME: zl2bl42cntrls05.dwg
PROJECT LEADER: T. FRENCH
DESIGNED BY: Y. ADELEKAN
CONTROL SCHEMATIC 5

PLOT DATE: 4/29/2016
DRAWN BY: R. DA SILVA
CHECKED BY: K. HAJJEH
SHEET 134 OF 196

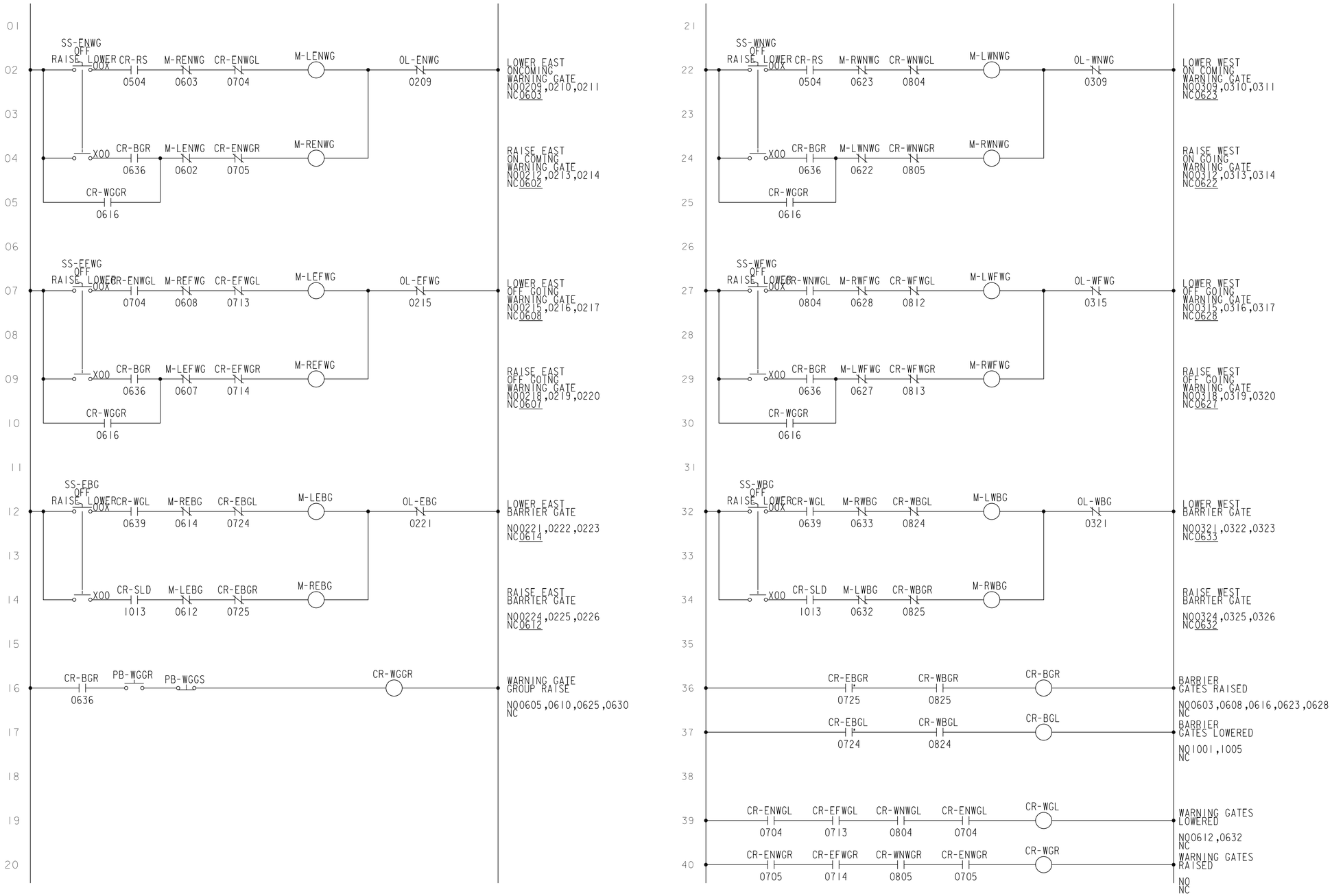

GATE CONTROLS 1 OF 4

PROGRESS PLANS

PROJECT NAME: NORTH HERO GRAND ISLE BRIDGE
PROJECT NUMBER: BHF 028-1(26)

FILE NAME: zl2bl42cntrls06.dwg
PROJECT LEADER: T. FRENCH
DESIGNED BY: Y. ADELEKAN
CONTROL SCHEMATIC 6

PLOT DATE: 4/29/2016
DRAWN BY: R. DA SILVA
CHECKED BY: K. HAJJEH
SHEET 135 OF 196

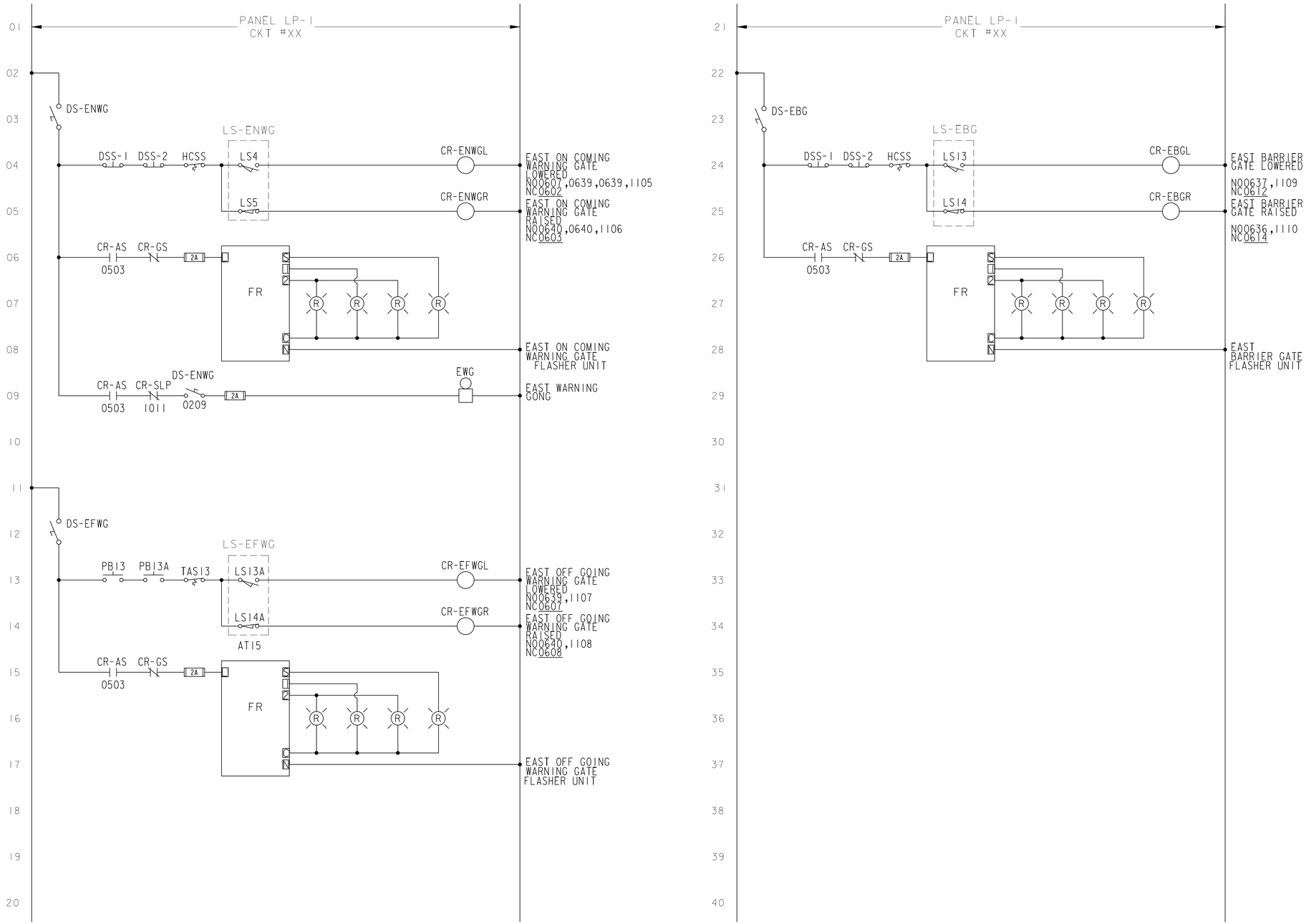

GATE CONTROLS 2 OF 4

PROGRESS PLANS

PROJECT NAME: NORTH HERO GRAND ISLE BRIDGE
PROJECT NUMBER: BHF 028-1(26)

FILE NAME: z12b142cntrls07.dwg
PROJECT LEADER: T. FRENCH
DESIGNED BY: Y. ADELEKAN
CONTROL SCHEMATIC 7

PLOT DATE: 4/29/2016
DRAWN BY: R. DA SILVA
CHECKED BY: K. HAJJEH
SHEET 136 OF 196

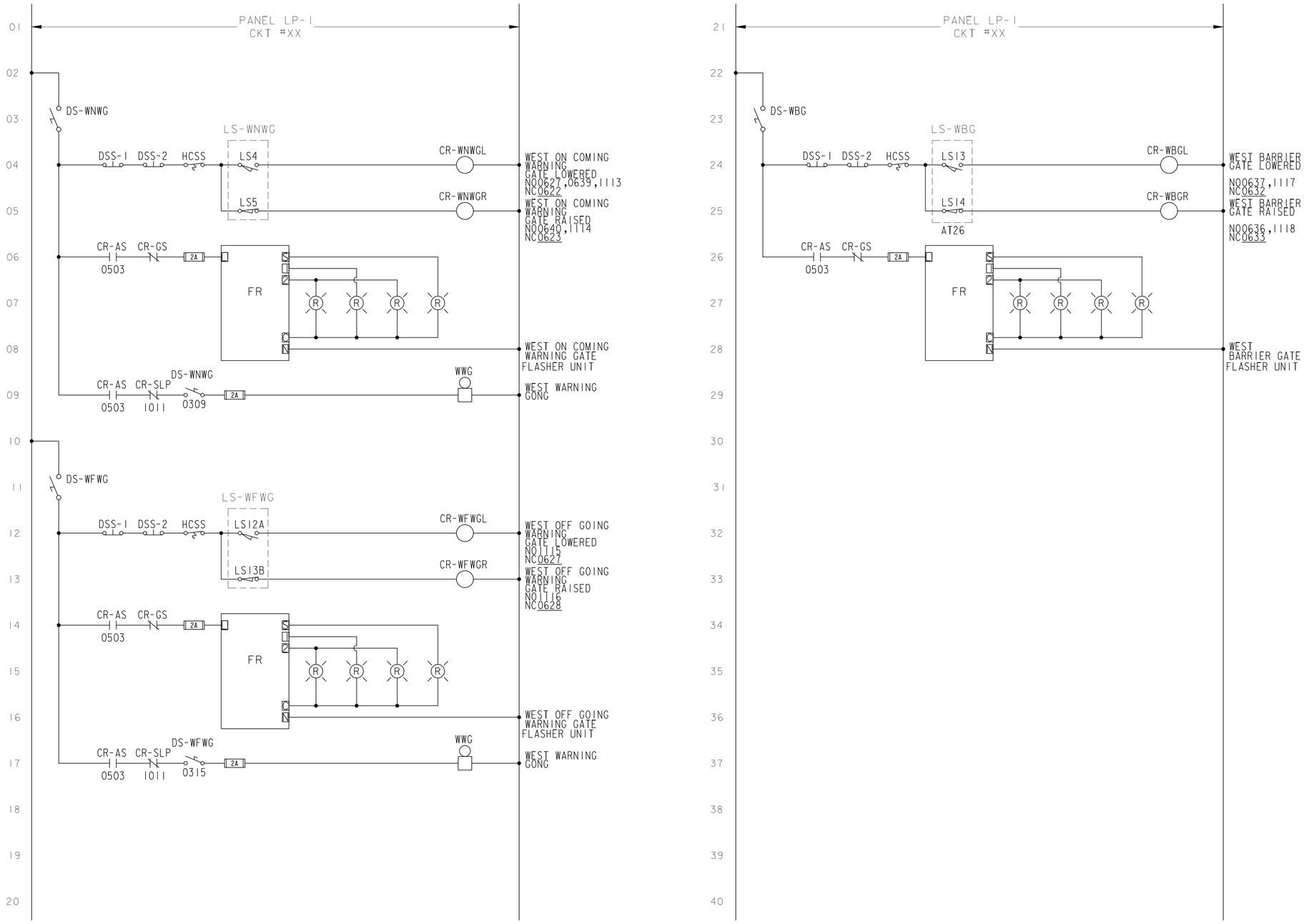

GATE CONTROLS 3 OF 4

PROGRESS PLANS

PROJECT NAME: NORTH HERO GRAND ISLE BRIDGE
PROJECT NUMBER: BHF 028-1(26)

FILE NAME: z12b142cntrls08.dwg
PROJECT LEADER: T. FRENCH
DESIGNED BY: Y. ADELEKAN
CONTROL SCHEMATIC 8

PLOT DATE: 4/29/2016
DRAWN BY: R. DA SILVA
CHECKED BY: K. HAJJEH
SHEET 137 OF 196

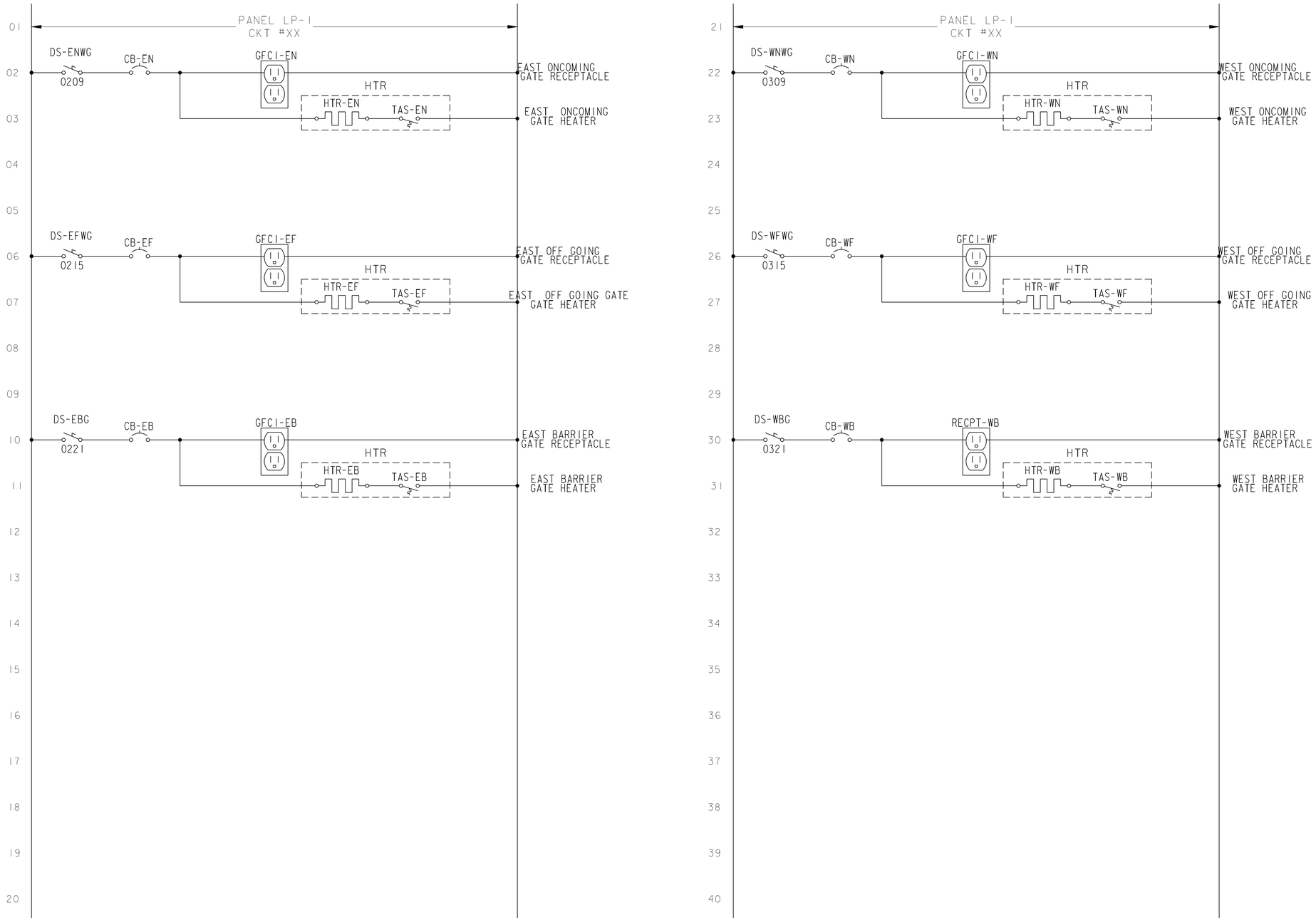

GATE CONTROLS 4 OF 4

PROGRESS PLANS

PROJECT NAME: NORTH HERO GRAND ISLE BRIDGE
PROJECT NUMBER: BHF 028-1(26)

FILE NAME: zl2bl42cntrls09.dwg
PROJECT LEADER: T. FRENCH
DESIGNED BY: Y. ADELEKAN
CONTROL SCHEMATIC 9

PLOT DATE: 4/29/2016
DRAWN BY: R. DA SILVA
CHECKED BY: K. HAJJEH
SHEET 138 OF 196

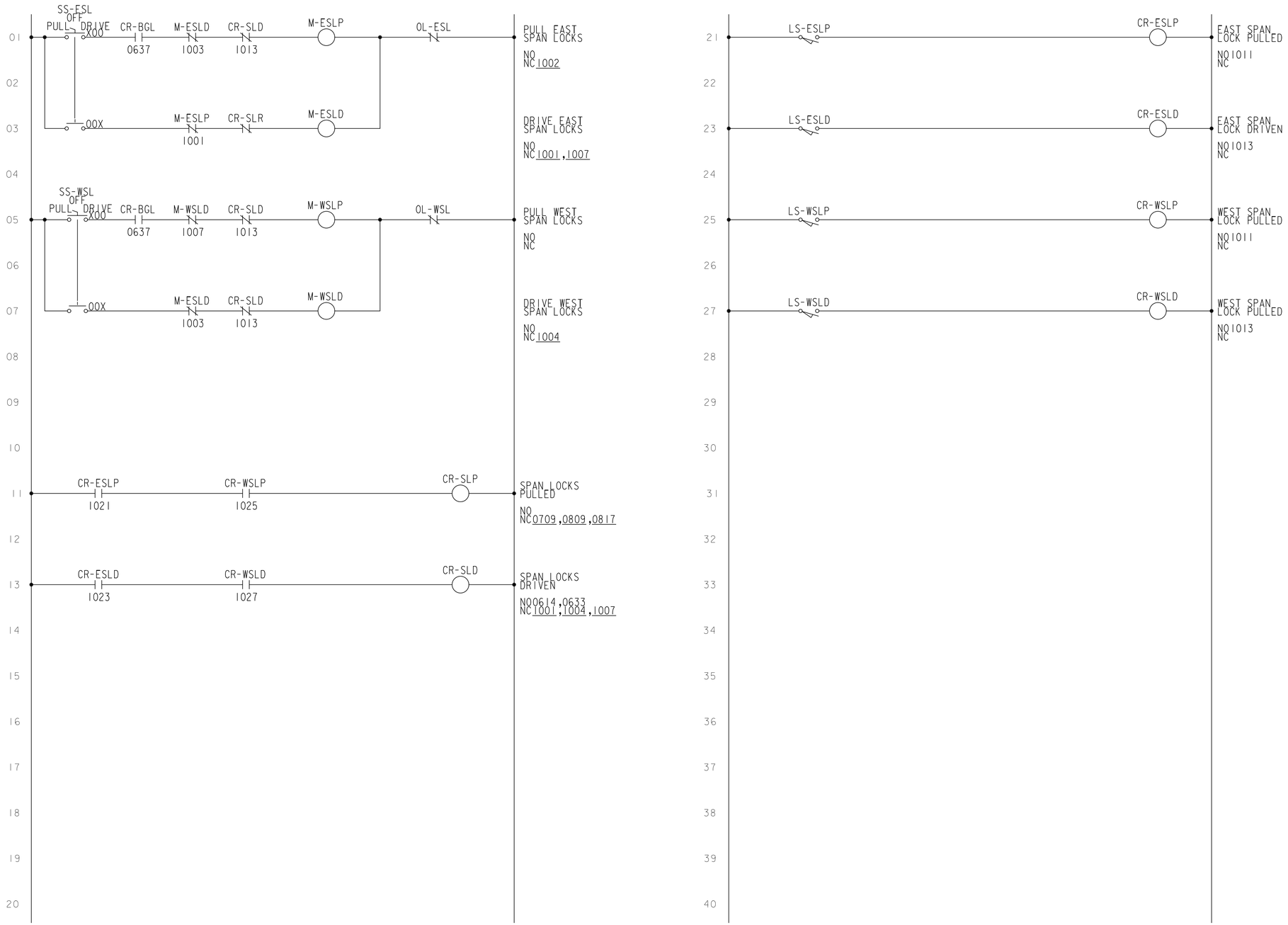

PROGRESS PLANS

PROJECT NAME: NORTH HERO GRAND ISLE BRIDGE
PROJECT NUMBER: BHF 028-1(26)

FILE NAME: z12b142cntrls10.dwg
PROJECT LEADER: T. FRENCH
DESIGNED BY: Y. ADELEKAN
CONTROL SCHEMATIC 10

PLOT DATE: 4/29/2016
DRAWN BY: R. DA SILVA
CHECKED BY: K. HAJJEH
SHEET 139 OF 196

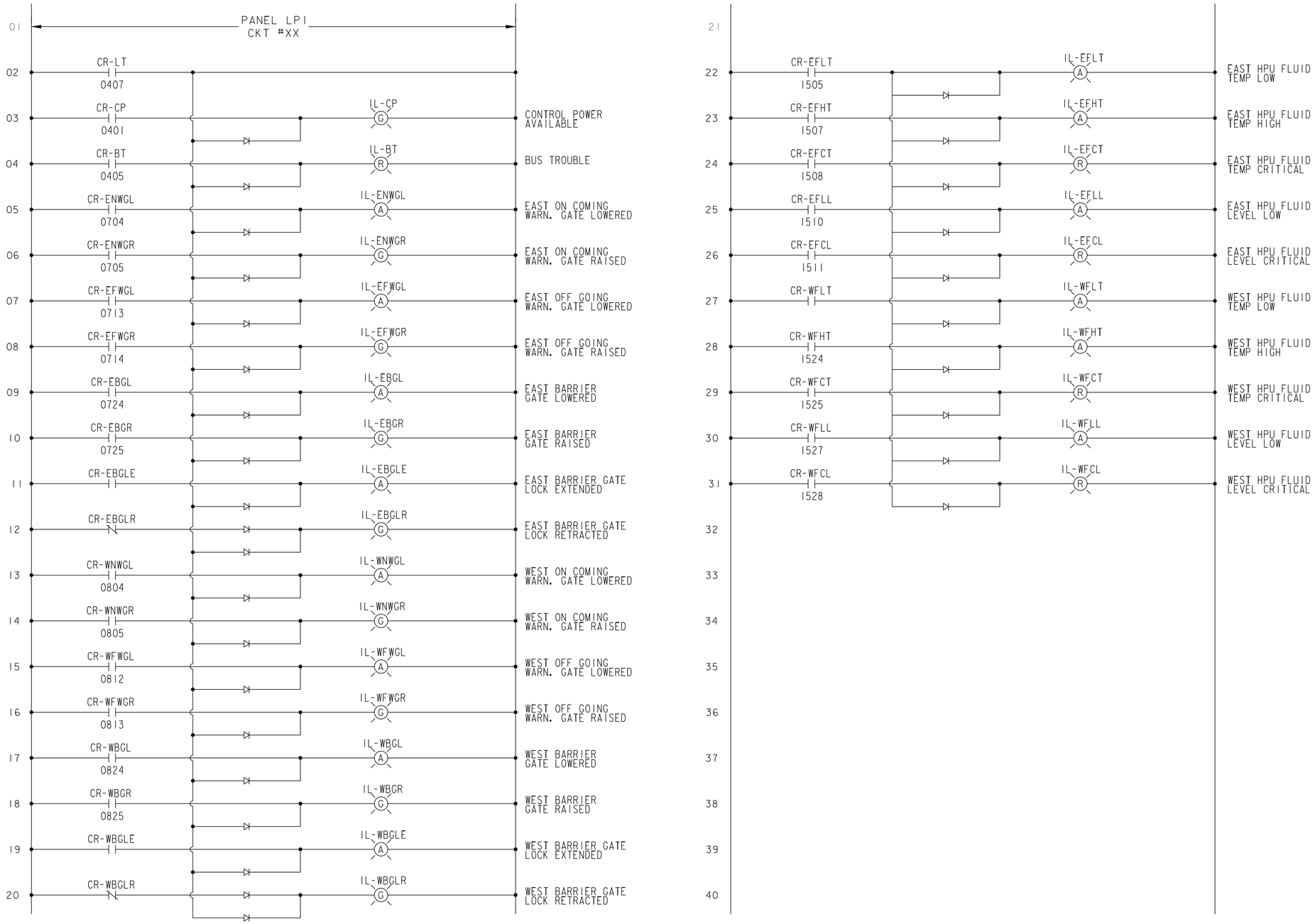

PROGRESS PLANS

PROJECT NAME: NORTH HERO GRAND ISLE BRIDGE
PROJECT NUMBER: BHF 028-1(26)

FILE NAME: zl2bl42cntrlsll.dwg
PROJECT LEADER: T. FRENCH
DESIGNED BY: Y. ADELEKAN
CONTROL SCHEMATIC II

PLOT DATE: 4/29/2016
DRAWN BY: R. DA SILVA
CHECKED BY: K. HAJJEH
SHEET 140 OF 196

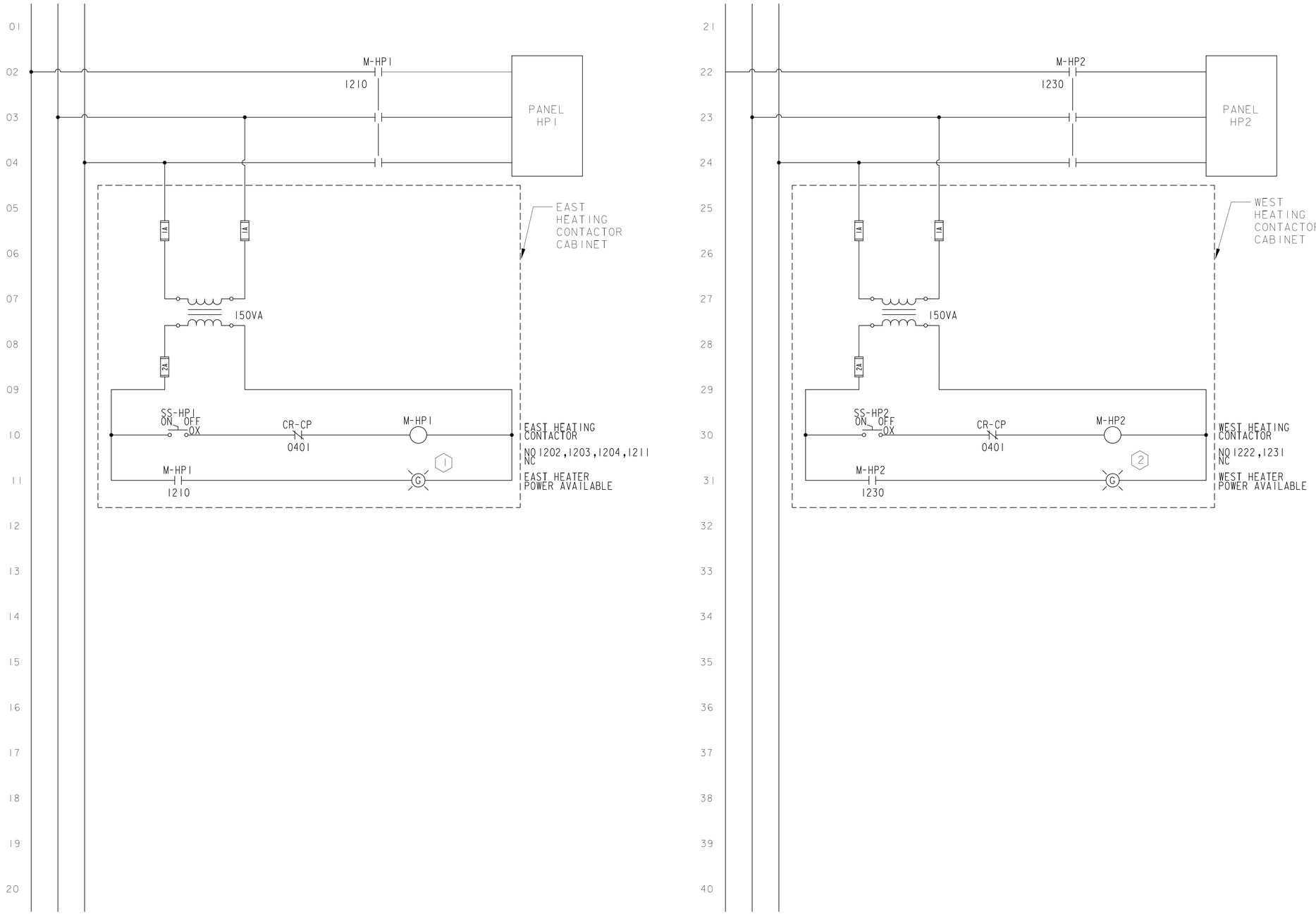

1 MOUNT SELECTOR SWITCH AND INDICATOR LIGHT ON EAST HEATING CONTACTOR TERMINATION CABINET

2 MOUNT SELECTOR SWITCH AND INDICATOR LIGHT ON WEST HEATING CONTACTOR TERMINATION CABINET

PROGRESS PLANS

PROJECT NAME: NORTH HERO GRAND ISLE BRIDGE
PROJECT NUMBER: BHF 028-1(26)

FILE NAME: z12b142cntrls12.dwg
PROJECT LEADER: T. FRENCH
DESIGNED BY: Y. ADELEKAN
CONTROL SCHEMATIC 12

PLOT DATE: 4/29/2016
DRAWN BY: R. DA SILVA
CHECKED BY: K. HAJJEH
SHEET 141 OF 196

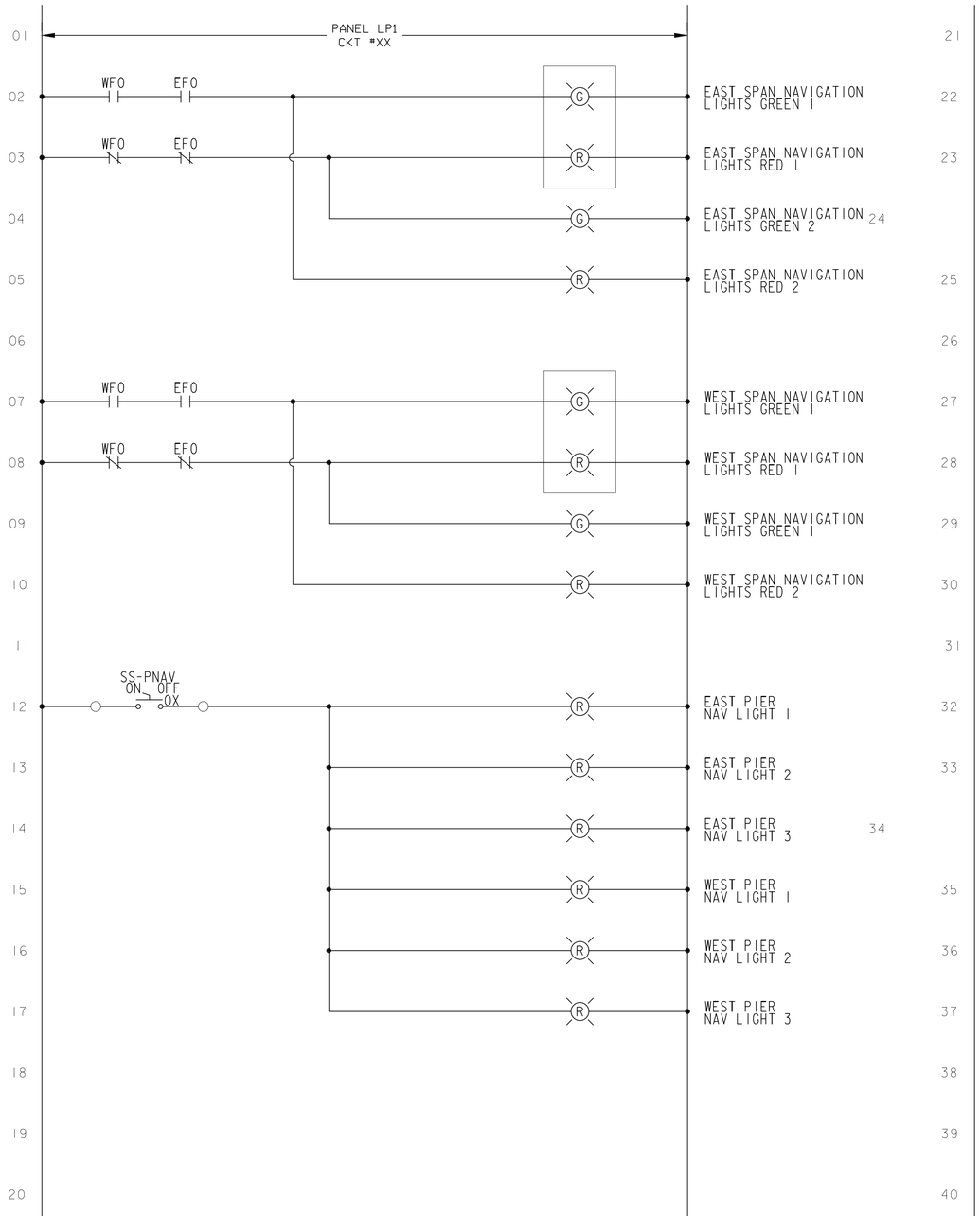

NAVIGATION LIGHTS

PROGRESS PLANS

PROJECT NAME: NORTH HERO GRAND ISLE BRIDGE
PROJECT NUMBER: BHF 028-1(26)

FILE NAME: z12b142cntrlsl3.dwg
PROJECT LEADER: T. FRENCH
DESIGNED BY: Y. ADELEKAN
CONTROL SCHEMATIC 13

PLOT DATE: 4/29/2016
DRAWN BY: R. DA SILVA
CHECKED BY: K. HAJJEH
SHEET 142 OF 196

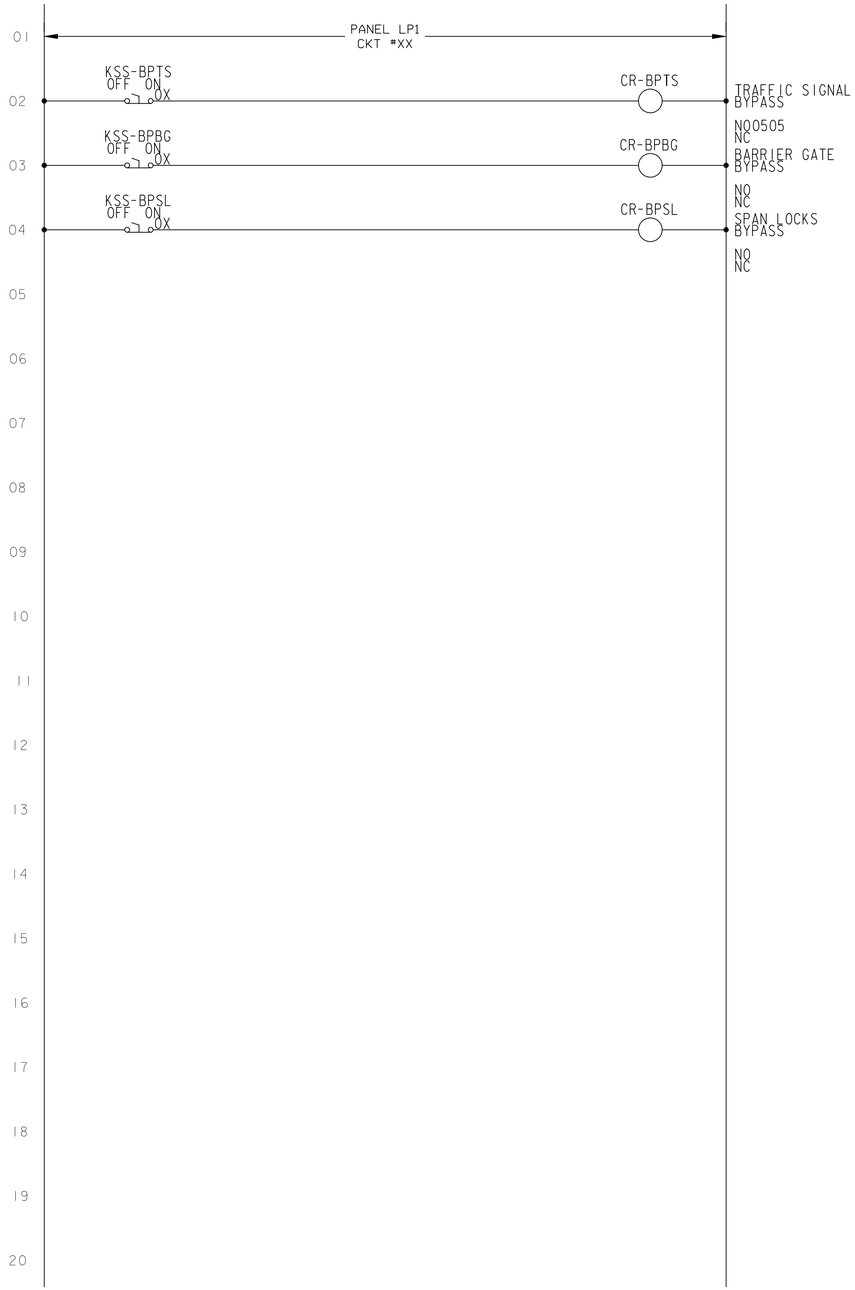

PROGRESS PLANS

PROJECT NAME: NORTH HERO GRAND ISLE BRIDGE
PROJECT NUMBER: BHF 028-1(26)

FILE NAME: z12b142cntrlsl4.dwg
PROJECT LEADER: T. FRENCH
DESIGNED BY: Y. ADELEKAN
CONTROL SCHEMATIC 14

PLOT DATE: 4/29/2016
DRAWN BY: R. DA SILVA
CHECKED BY: K. HAJJEH
SHEET 143 OF 196

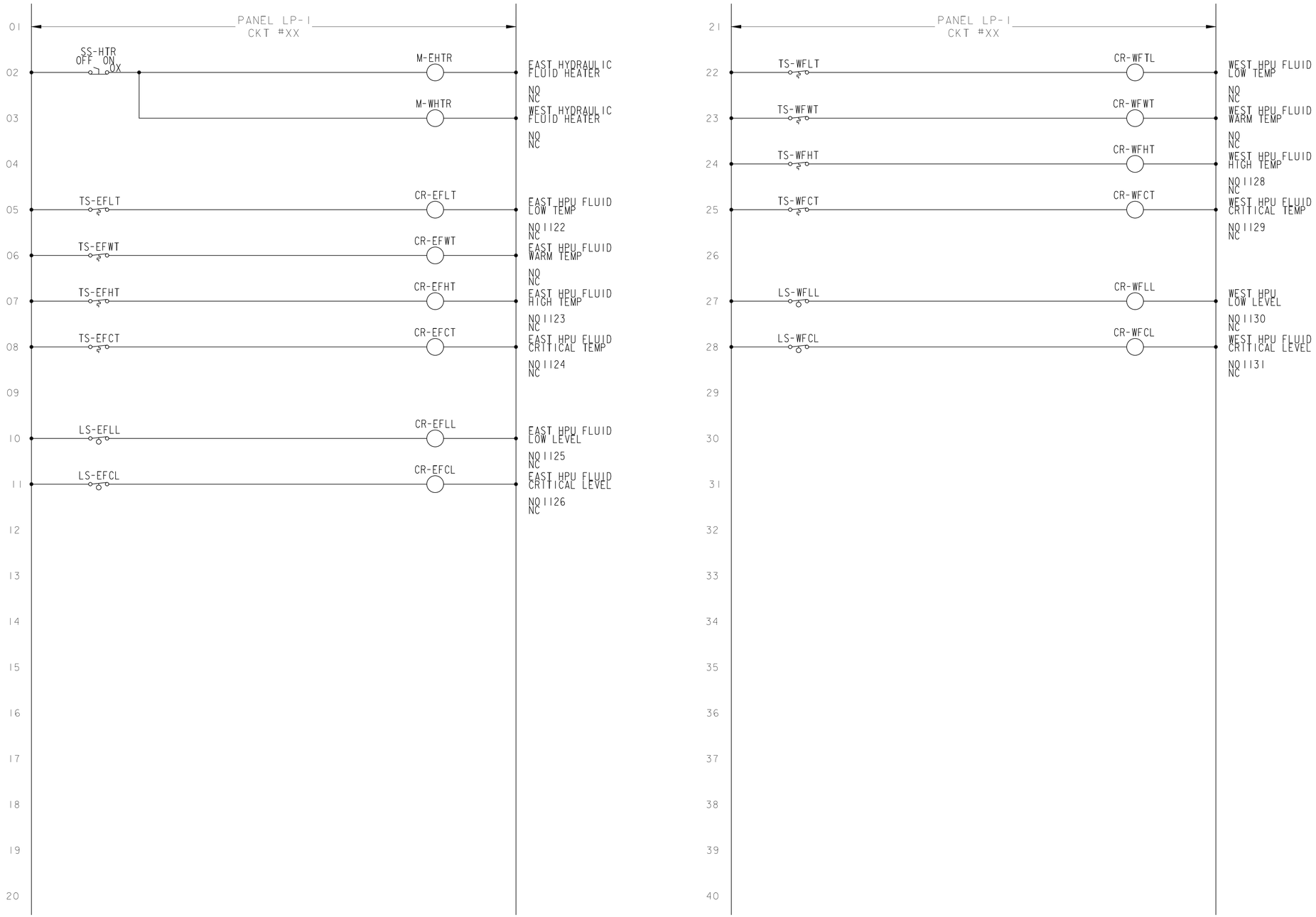

PROGRESS PLANS

PROJECT NAME: NORTH HERO GRAND ISLE BRIDGE
PROJECT NUMBER: BHF 028-1(26)

FILE NAME: z12b142cntrls15.dwg
PROJECT LEADER: T. FRENCH
DESIGNED BY: Y. ADELEKAN
CONTROL SCHEMATIC 15

PLOT DATE: 4/29/2016
DRAWN BY: R. DA SILVA
CHECKED BY: K. HAJJEH
SHEET 144 OF 196

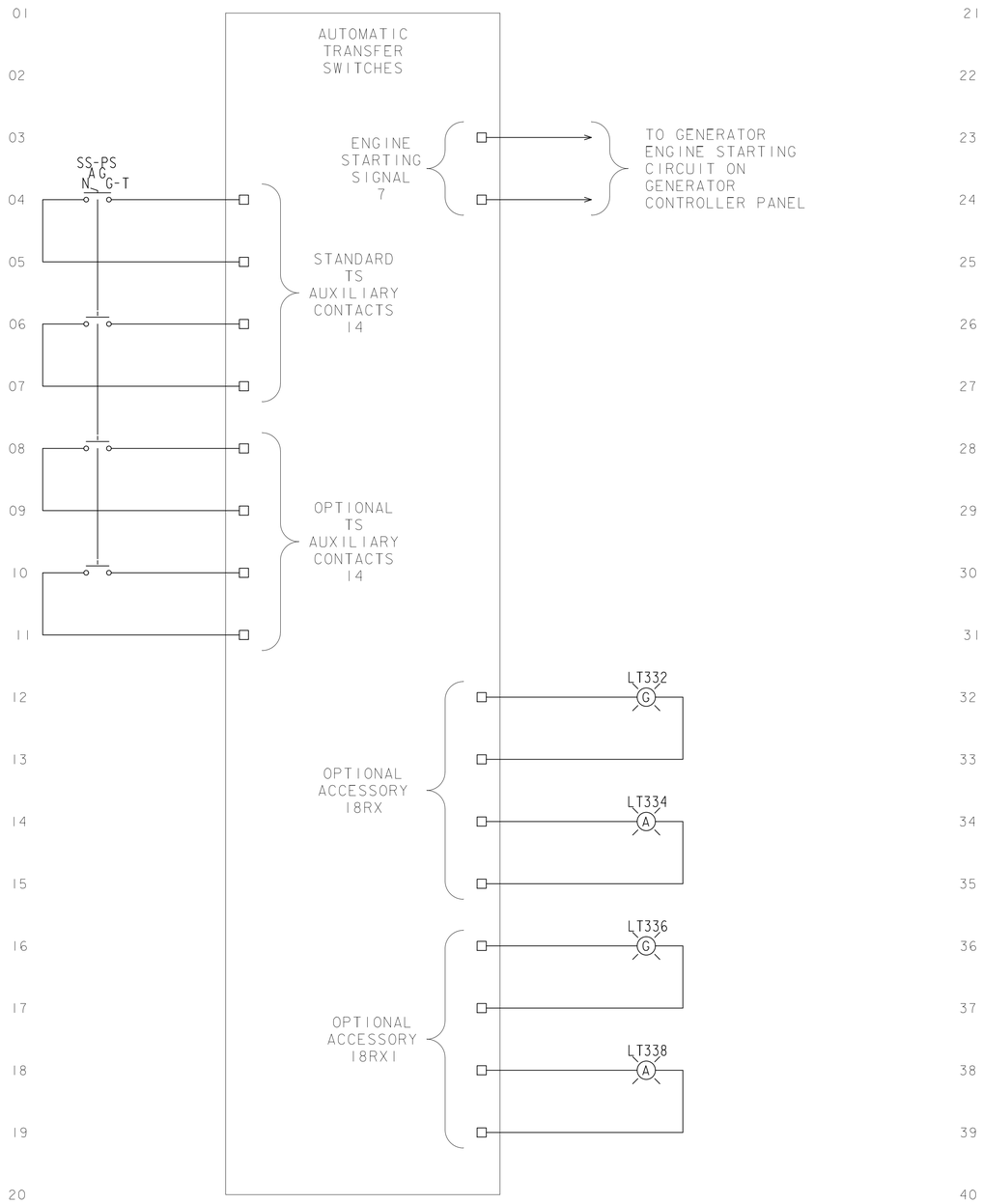

PROGRESS PLANS

PROJECT NAME: NORTH HERO GRAND ISLE BRIDGE
PROJECT NUMBER: BHF 028-1(26)

FILE NAME: z12b142cntrls16.dwg
PROJECT LEADER: T. FRENCH
DESIGNED BY: Y. ADELEKAN
CONTROL SCHEMATIC 16

PLOT DATE: 4/29/2016
DRAWN BY: R. DA SILVA
CHECKED BY: K. HAJJEH
SHEET 145 OF 196

NOTES

1. FOR LEGEND, ABBREVIATIONS, AND GENERAL NOTES, SEE SHEET NO. XXX

HYDRAULIC FLUID TEMPERATURE SWITCHES			
TEMPERATURE SWITCH	SYMBOL	DEVELOPMENT	FUNCTION
TS-EFCT TS-WFCT			CRITICAL HYDRAULIC FLUID TEMPERATURE
TS-EFHT TS-WFHT			HOT HYDRAULIC FLUID TEMPERATURE
TS-EFWT TS-WFWT			WARM HYDRAULIC FLUID TEMPERATURE
TS-EFLT TS-WFLT			LOW HYDRAULIC FLUID TEMPERATURE

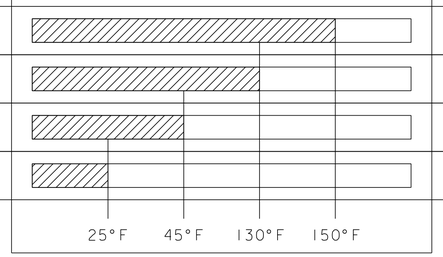

HYDRAULIC FLUID OIL LEVEL SWITCHES			
LEVEL SENSOR	SYMBOL	DEVELOPMENT	FUNCTION
TS-EFCT TS-WFCT			CRITICAL (LOW) FLUID LEVEL
TS-EFHT TS-WFHT			LOW FLUID LEVEL

LIMIT SWITCH DEVELOPMENT

PROGRESS PLANS

PROJECT NAME: NORTH HERO GRAND ISLE BRIDGE
PROJECT NUMBER: BHF 028-1(26)

FILE NAME: zi2bl42utildet.dgn
PROJECT LEADER: T. FRENCH
DESIGNED BY: Y. ADELEKAN
LIMIT SWITCH DEVELOPMENT

PLOT DATE: 4/25/2016
DRAWN BY: R. DA SILVA
CHECKED BY: K. HAJJEH
SHEET 146 OF 196

NOTES

1. FOR LEGEND, ABBREVIATIONS, AND GENERAL NOTES, SEE SHEET NO. XXX

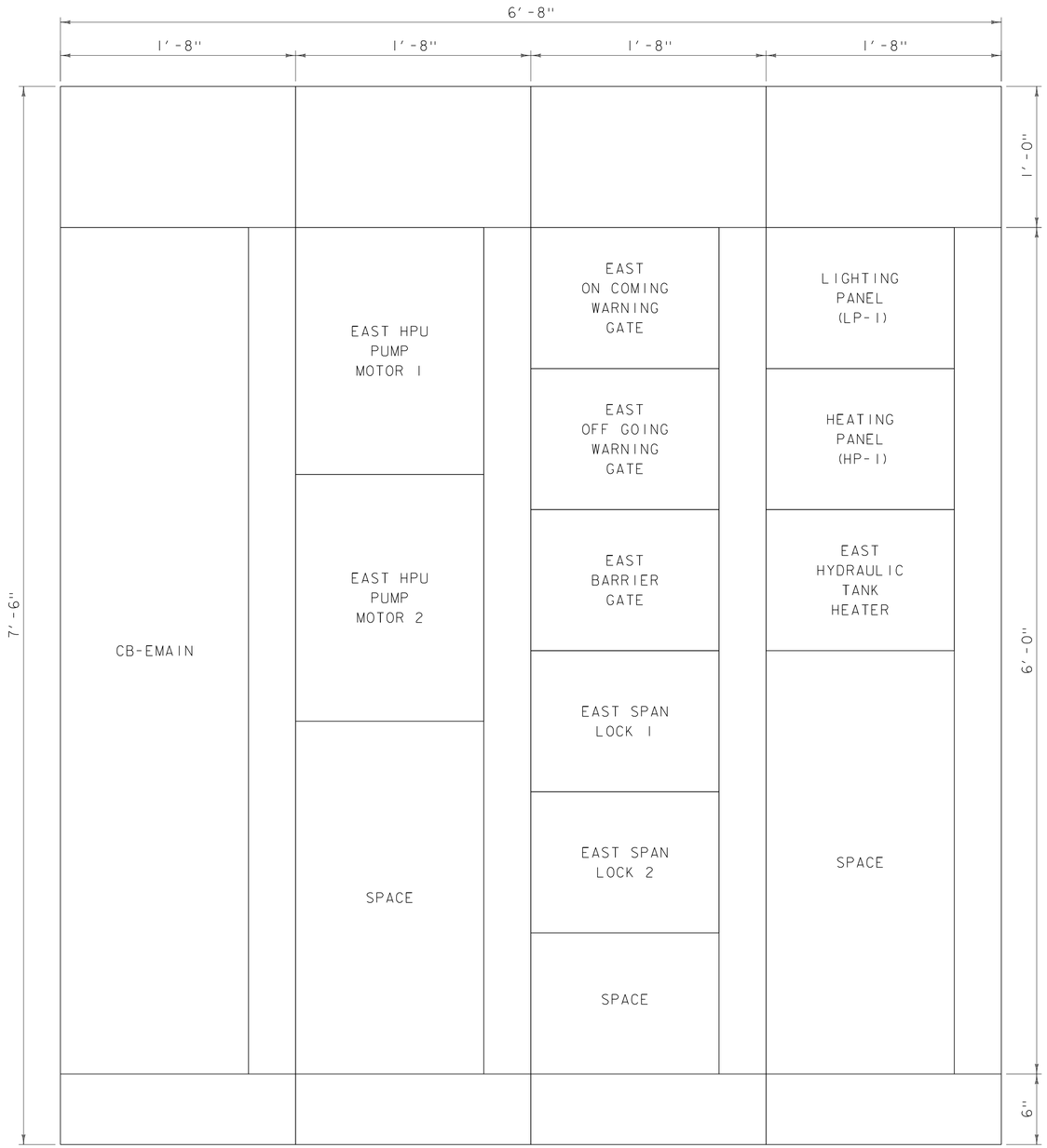

EAST MCC LAYOUT

SCALE 6" = 1'-0"

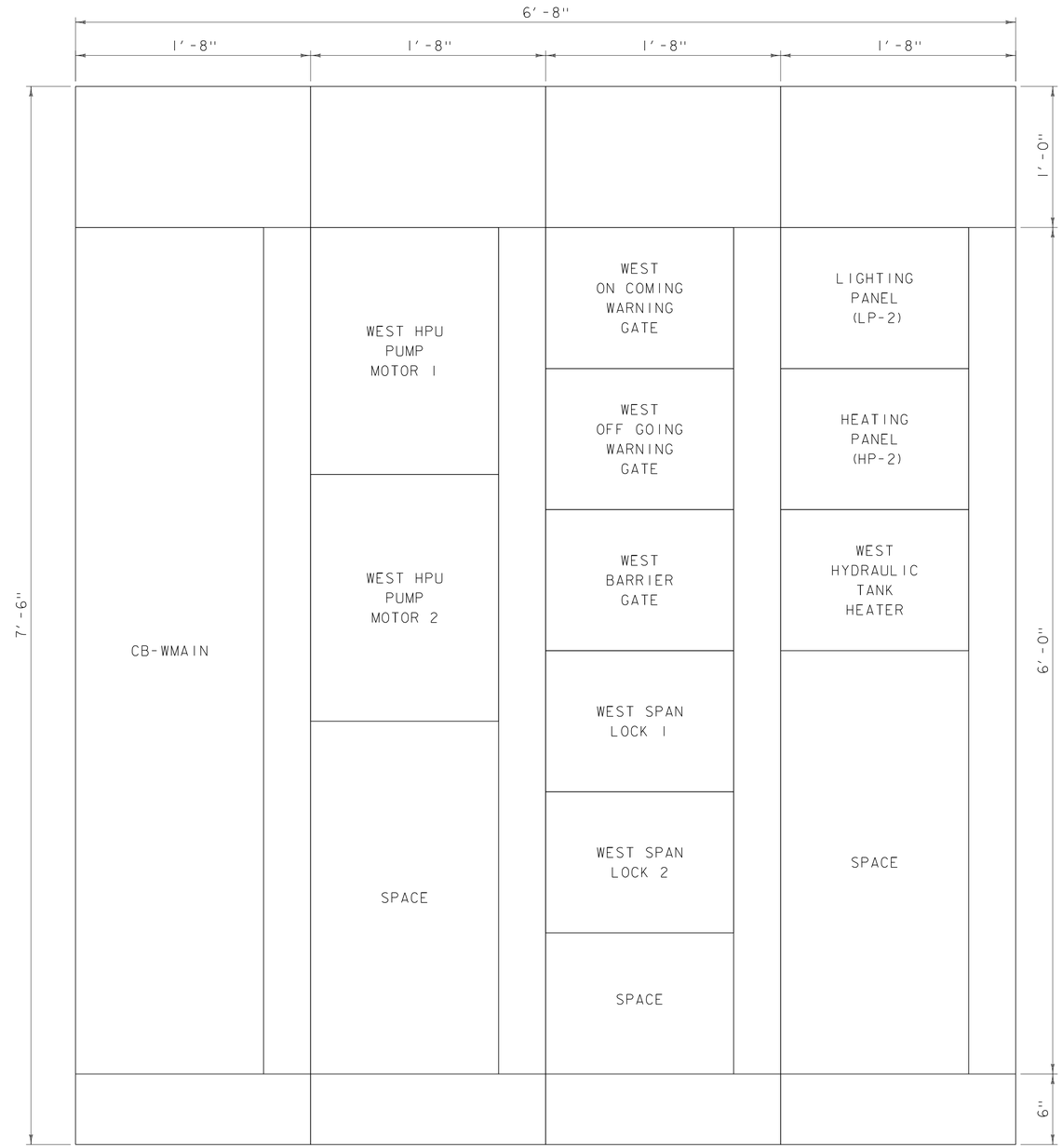

WEST MCC LAYOUT

SCALE 6" = 1'-0"

PROGRESS PLANS

HDR

PROJECT NAME: NORTH HERO GRAND ISLE BRIDGE	
PROJECT NUMBER: BHF 028-1(26)	
FILE NAME: z12b142mcc.dgn	PLOT DATE: 4/25/2016
PROJECT LEADER: T. FRENCH	DRAWN BY: R. DA SILVA
DESIGNED BY: Y. ADELEKAN	CHECKED BY: K. HAJJEH
MCC LAYOUT	SHEET 147 OF 196

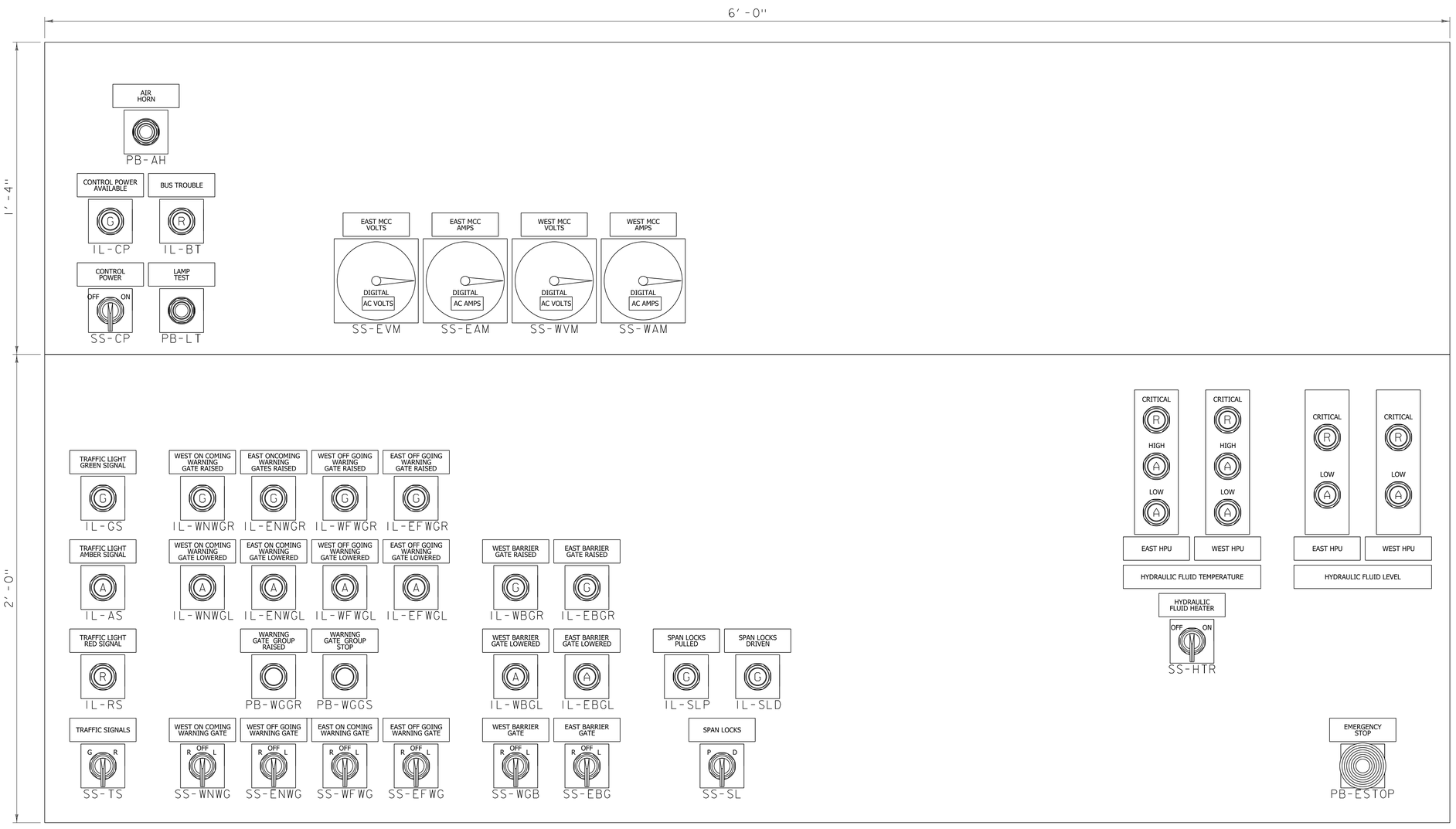

NOTES

1. FOR LEGEND, ABBREVIATIONS, AND GENERAL NOTES, SEE SHEET NO. XXX
2. CONTROL DESK SHALL BE FABRICATED OF 10 GAUGE TYPE 316L NEMA 4X STAINLESS STEEL. DESKTOP SHALL HAVE A NON-GLARE SATIN FINISH.
3. ALL NAMEPLATES SHALL BE HOT-POLISHED, BLACK AND WHITE, LAMINATED PHENOLIC COMPOUND WITH WHITE SURFACES AND INTERMEDIATE BLACK LAYER.

   LETTERING SHALL BE ENGRAVED INTO THE INTERMEDIATE BLACK LAYER. LETTERING SHALL NOT BE SMALLER THAN 1/4". USE HELVETICA MEDIUM TYPE FACE LETTERING.

   ALL NAMEPLATES SHALL BE AFFIXED TO THE DESK WITH STAINLESS STEEL MOUNTING SCREWS.

CONTROL DESK LAYOUT

SCALE 3" = 1'-0"

PROGRESS PLANS

PROJECT NAME: NORTH HERO GRAND ISLE BRIDGE	
PROJECT NUMBER: BHF 028-1(26)	
FILE NAME: zl2bl42ctrdslay.dgn	PLOT DATE: 4/25/2016
PROJECT LEADER: T. FRENCH	DRAWN BY: R. DA SILVA
DESIGNED BY: Y. ADELEKAN	CHECKED BY: K. HAJJEH
CONTROL DESK LAYOUT	SHEET 148 OF 196

NOTES

1. FOR LEGEND, ABBREVIATIONS, AND GENERAL NOTES, SEE SHEET NO. XXX
2. FINISH CONTROL DESK WITH 120V DUPLEX RECEPTACLE. RECEPTACLE SHALL BE LOCATED IN AN ACCESSIBLE LOCATION.

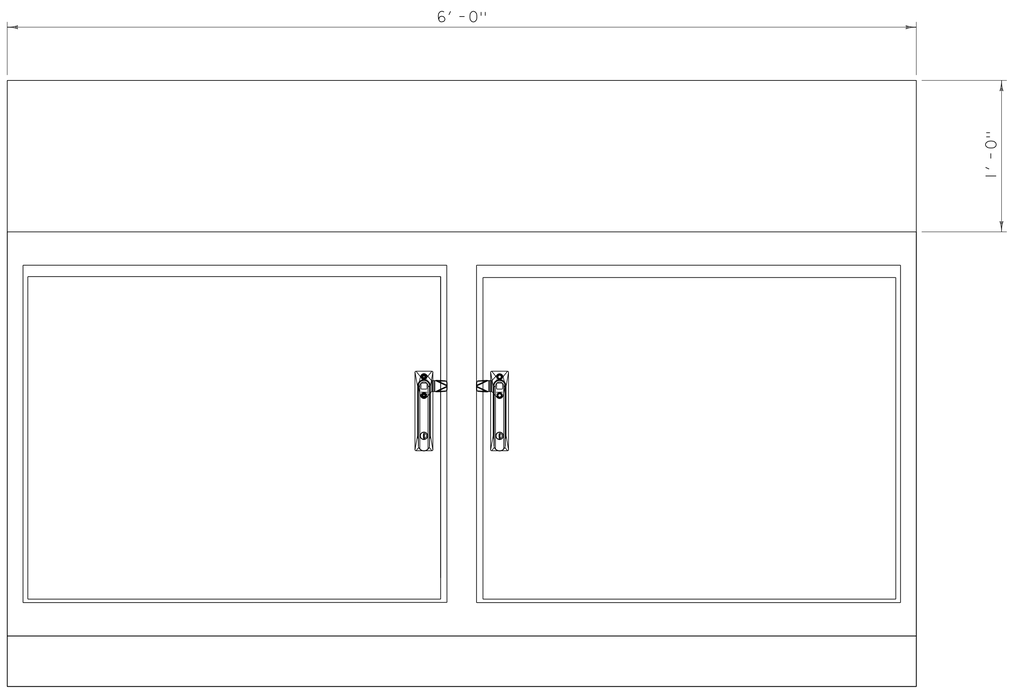

CONTROL DESK FRONT ELEVATION

SCALE 6" = 1' -0"

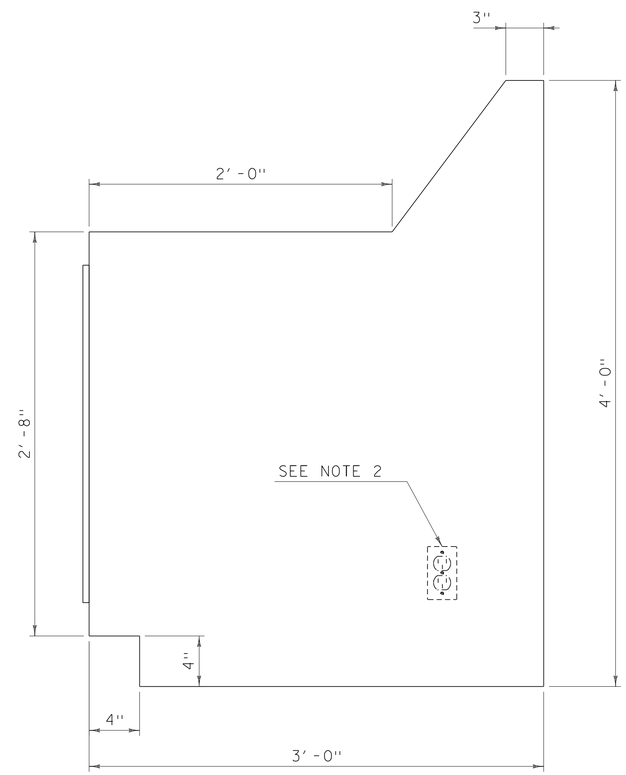

CONTROL DESK SIDE ELEVATION

SCALE 6" = 1' -0"

PROGRESS PLANS

PROJECT NAME: NORTH HERO GRAND ISLE BRIDGE	
PROJECT NUMBER: BHF 028-1(26)	
FILE NAME: z12b142ctrldet.dgn	PLOT DATE: 4/25/2016
PROJECT LEADER: T. FRENCH	DRAWN BY: R. DA SILVA
DESIGNED BY: Y. ADELEKAN	CHECKED BY: K. HAJJEH
CONTROL DESK DETAILS	SHEET 149 OF 196

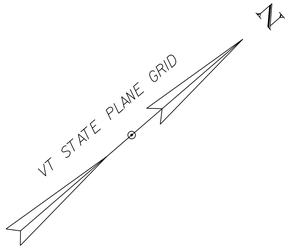

NOTES

1. FOR LEGEND, ABBREVIATIONS, AND GENERAL NOTES, SEE SHEET NO. XXX

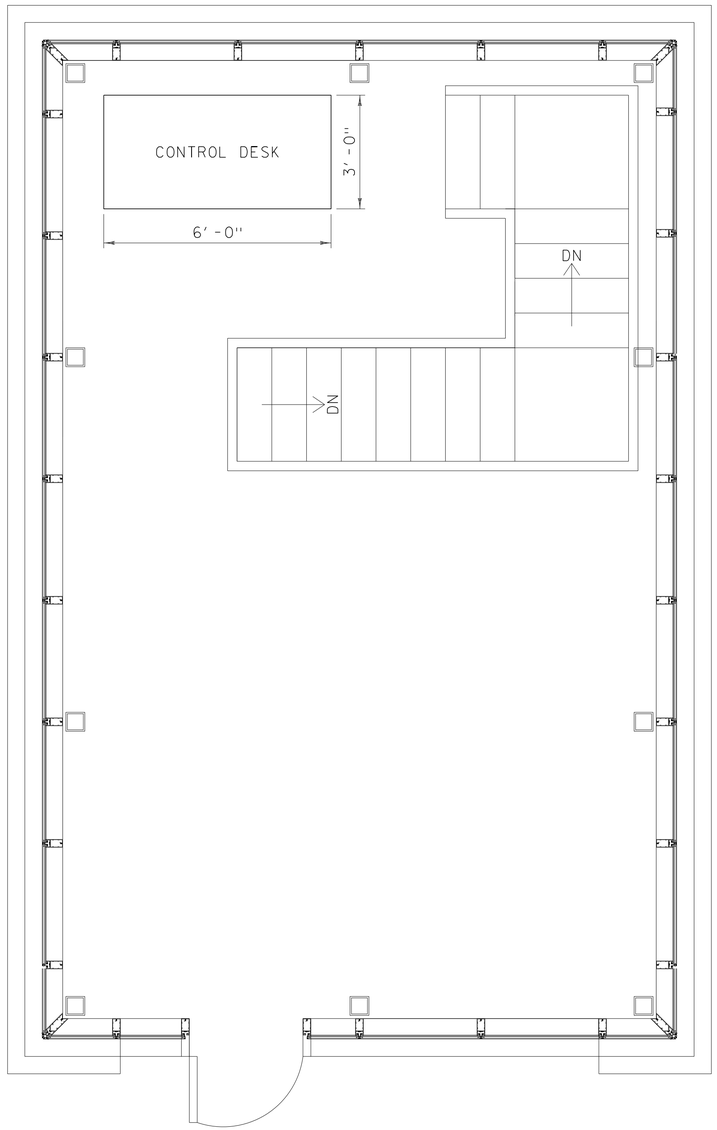

CONTROL HOUSE - LEVEL 1 EQUIPMENT LAYOUT

SCALE ½" = 1'-0"

PROGRESS PLANS

PROJECT NAME:	NORTH HERO GRAND ISLE BRIDGE
PROJECT NUMBER:	BHF 028-1(26)

FILE NAME: zl2bl42ctrlhsl.dgn	PLOT DATE: 4/25/2016
PROJECT LEADER: T. FRENCH	DRAWN BY: R. DA SILVA
DESIGNED BY: Y. ADELEKAN	CHECKED BY: K. HAJJEH
CONTROL HOUSE LEVEL 1 LAYOUT	SHEET 150 OF 196

NOTES

1. FOR LEGEND, ABBREVIATIONS, AND GENERAL NOTES, SEE SHEET NO. XXX

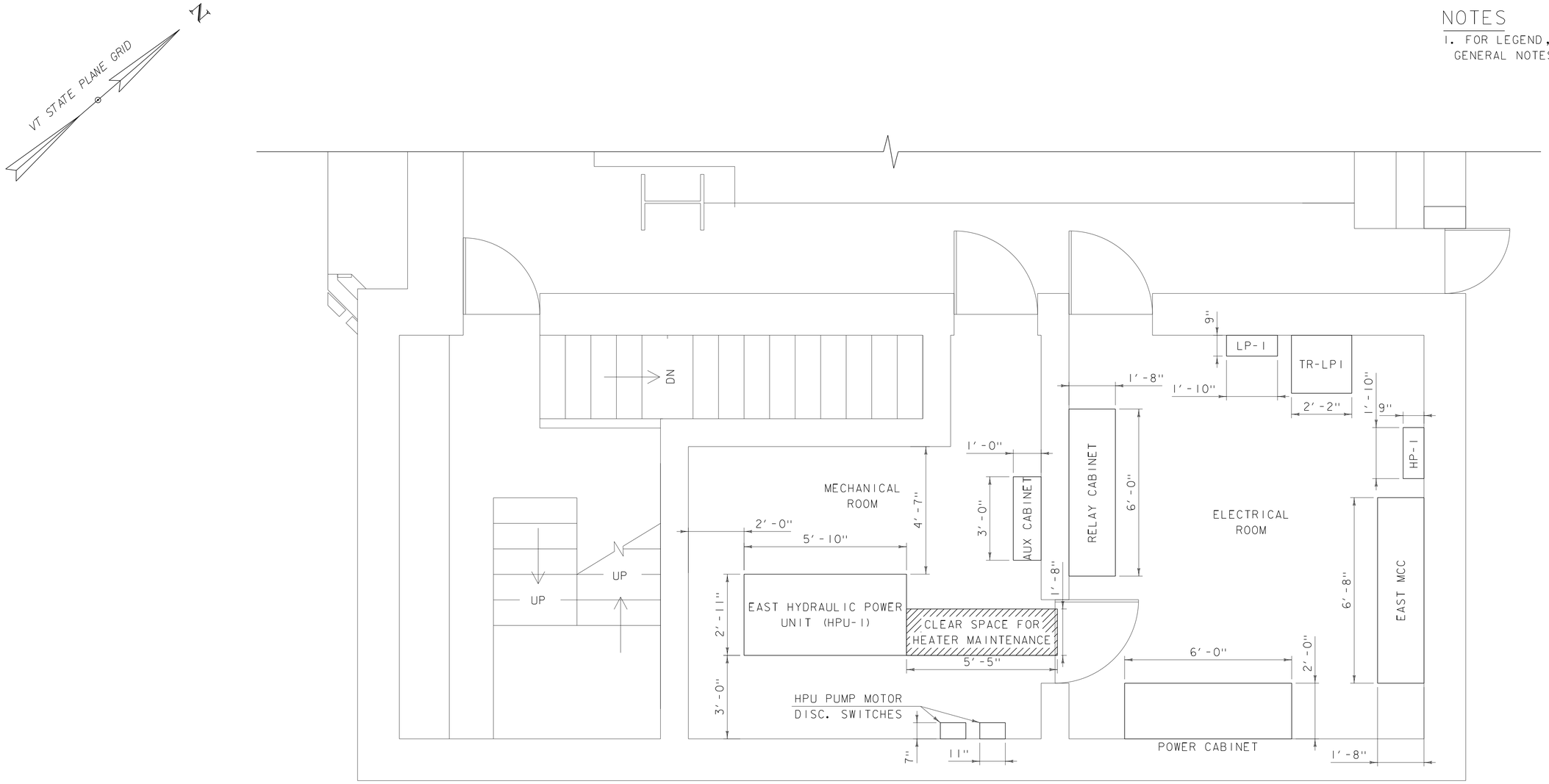

CONTROL HOUSE - LEVEL 2 EQUIPMENT LAYOUT

SCALE ½" = 1'-0"

PROGRESS PLANS

HDR

PROJECT NAME: NORTH HERO GRAND ISLE BRIDGE	
PROJECT NUMBER: BHF 028-1(26)	
FILE NAME: z12b142ctrlhs2.dgn	PLOT DATE: 4/25/2016
PROJECT LEADER: T. FRENCH	DRAWN BY: R. DA SILVA
DESIGNED BY: Y. ADELEKAN	CHECKED BY: K. HAJJEH
CONTROL HOUSE LEVEL 2 LAYOUT	SHEET 151 OF 196

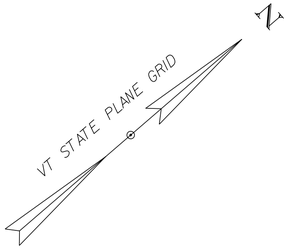

NOTES

1. FOR LEGEND, ABBREVIATIONS, AND GENERAL NOTES, SEE SHEET NO. XXX

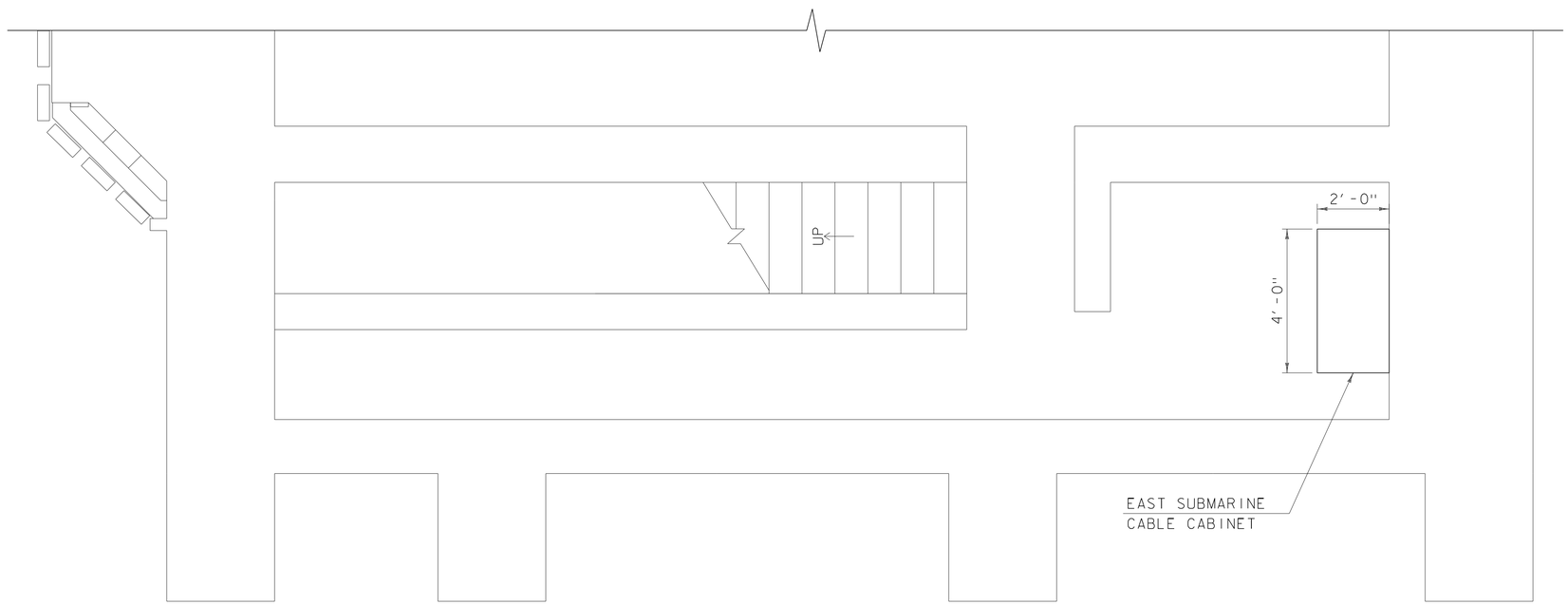

CONTROL HOUSE - LEVEL 3 EQUIPMENT LAYOUT

SCALE ½" = 1'-0"

PROGRESS PLANS

PROJECT NAME: NORTH HERO GRAND ISLE BRIDGE	
PROJECT NUMBER: BHF 028-1(26)	
FILE NAME: z12b142ctrlhs3.dgn	PLOT DATE: 4/25/2016
PROJECT LEADER: T. FRENCH	DRAWN BY: R. DA SILVA
DESIGNED BY: Y. ADELEKAN	CHECKED BY: K. HAJJEH
CONTROL HOUSE LEVEL 3 LAYOUT	SHEET 152 OF 196

NOTES

1. FOR LEGEND, ABBREVIATIONS, AND GENERAL NOTES, SEE SHEET NO. XXX

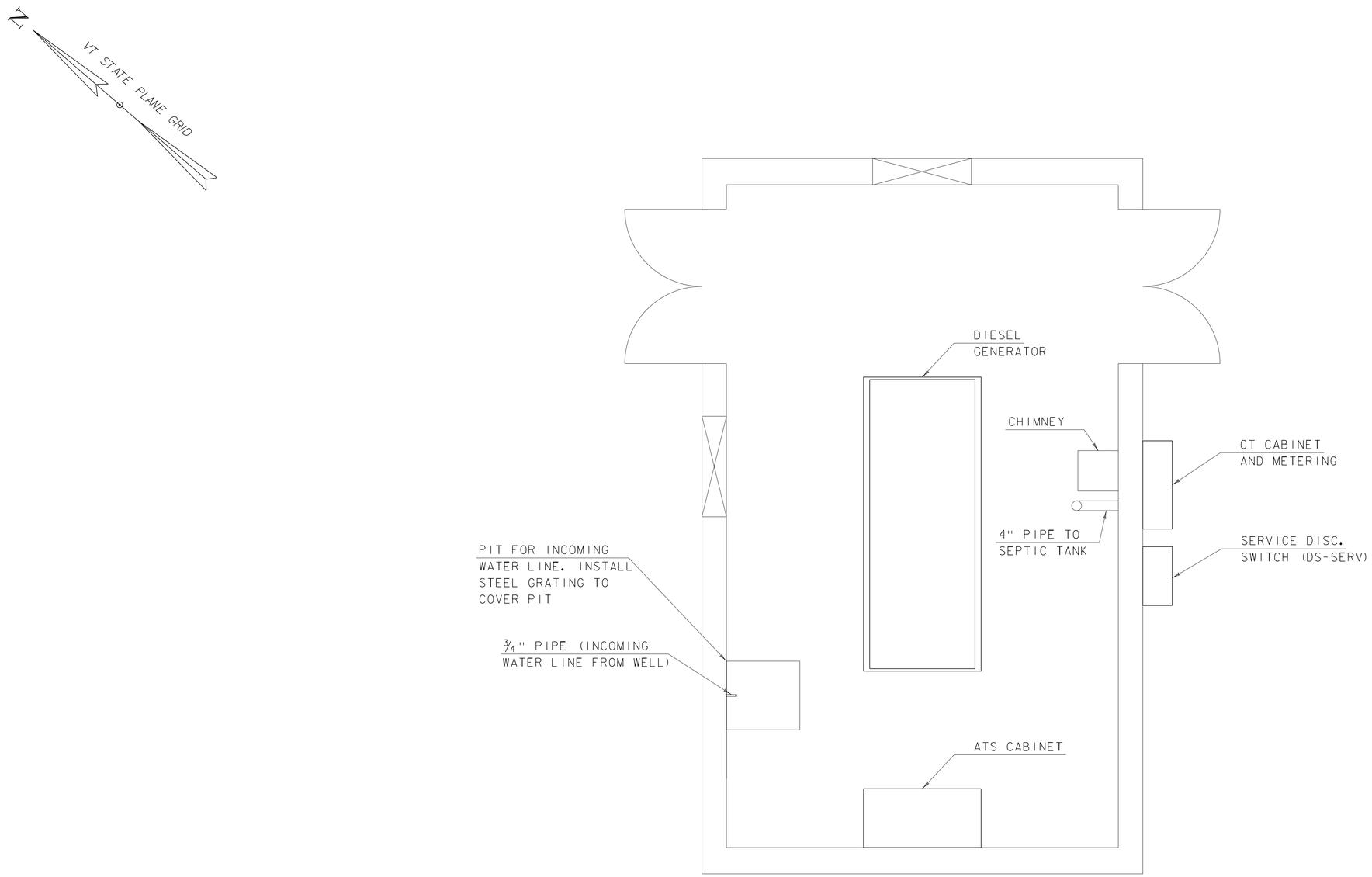

PROPOSED TENDER HOUSE - BASEMENT LEVEL LAYOUT

SCALE 1/2" = 1'-0"

PROGRESS PLANS

PROJECT NAME:	NORTH HERO GRAND ISLE BRIDGE
PROJECT NUMBER:	BHF 028-1(26)

FILE NAME: zi2bl42tenhsl.dgn	PLOT DATE: 4/25/2016
PROJECT LEADER: T. FRENCH	DRAWN BY: R. DA SILVA
DESIGNED BY: Y. ADELEKAN	CHECKED BY: K. HAJJEH
PROPOSED TENDER HOUSE BASEMENT LAYOUT	SHEET 153 OF 196

NOTES

1. FOR LEGEND, ABBREVIATIONS, AND GENERAL NOTES, SEE SHEET NO. XXX

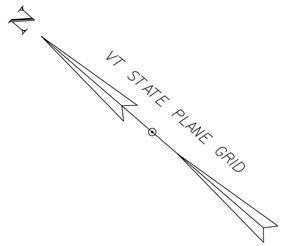

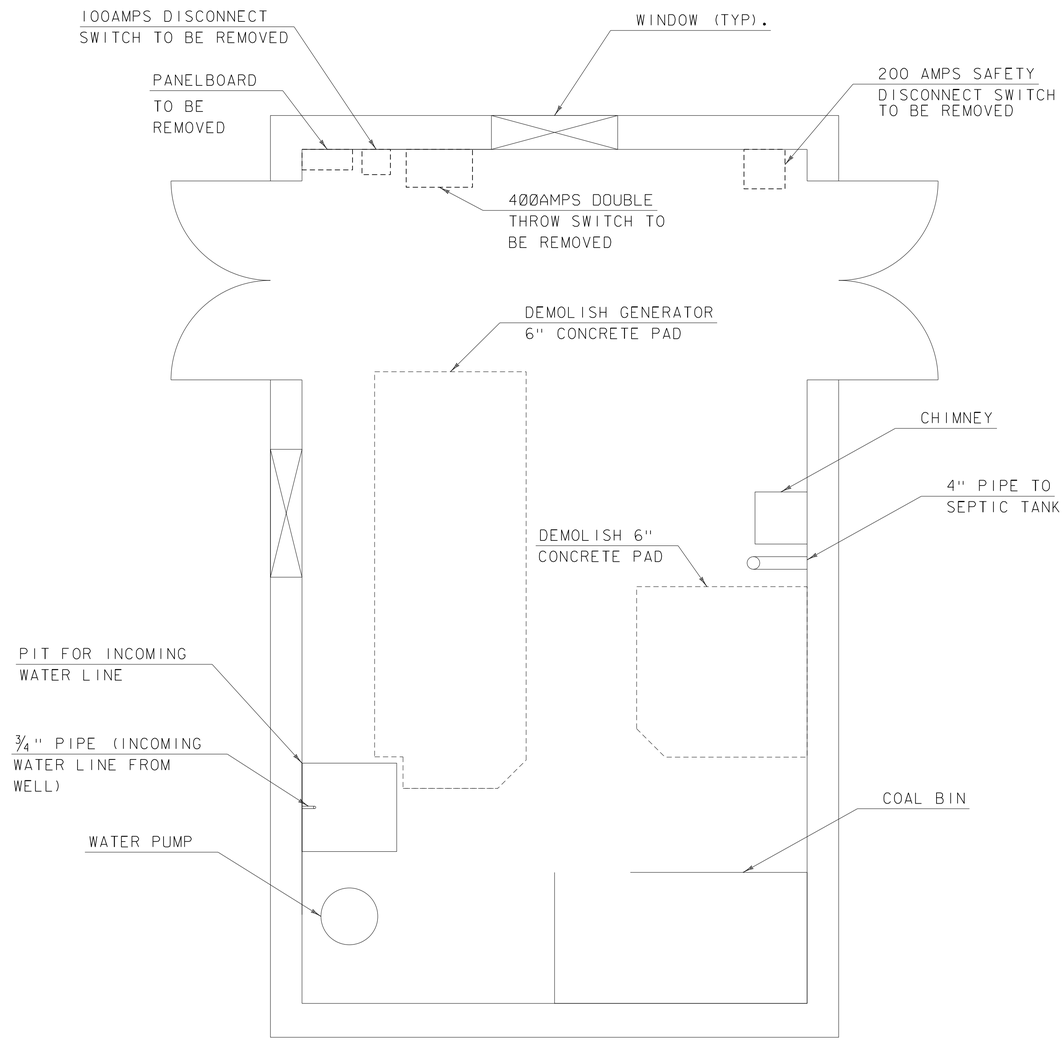

TENDER HOUSE - BASEMENT LEVEL DEMOLITION PLAN

SCALE: ½" = 1'-0"

PROGRESS PLANS

HDR

PROJECT NAME: NORTH HERO GRAND ISLE BRIDGE	
PROJECT NUMBER: BHF 028-1(26)	
FILE NAME: z12b142tenhs2.dgn	PLOT DATE: 4/25/2016
PROJECT LEADER: T. FRENCH	DRAWN BY: R. DA SILVA
DESIGNED BY: Y. ADELEKAN	CHECKED BY: K. HAJJEH
EXISTING TENDER HOUSE BASEMENT LAYOUT	SHEET 154 OF 196

NOTES

1. FOR LEGEND, ABBREVIATIONS, AND GENERAL NOTES, SEE SHEET NO. XXX

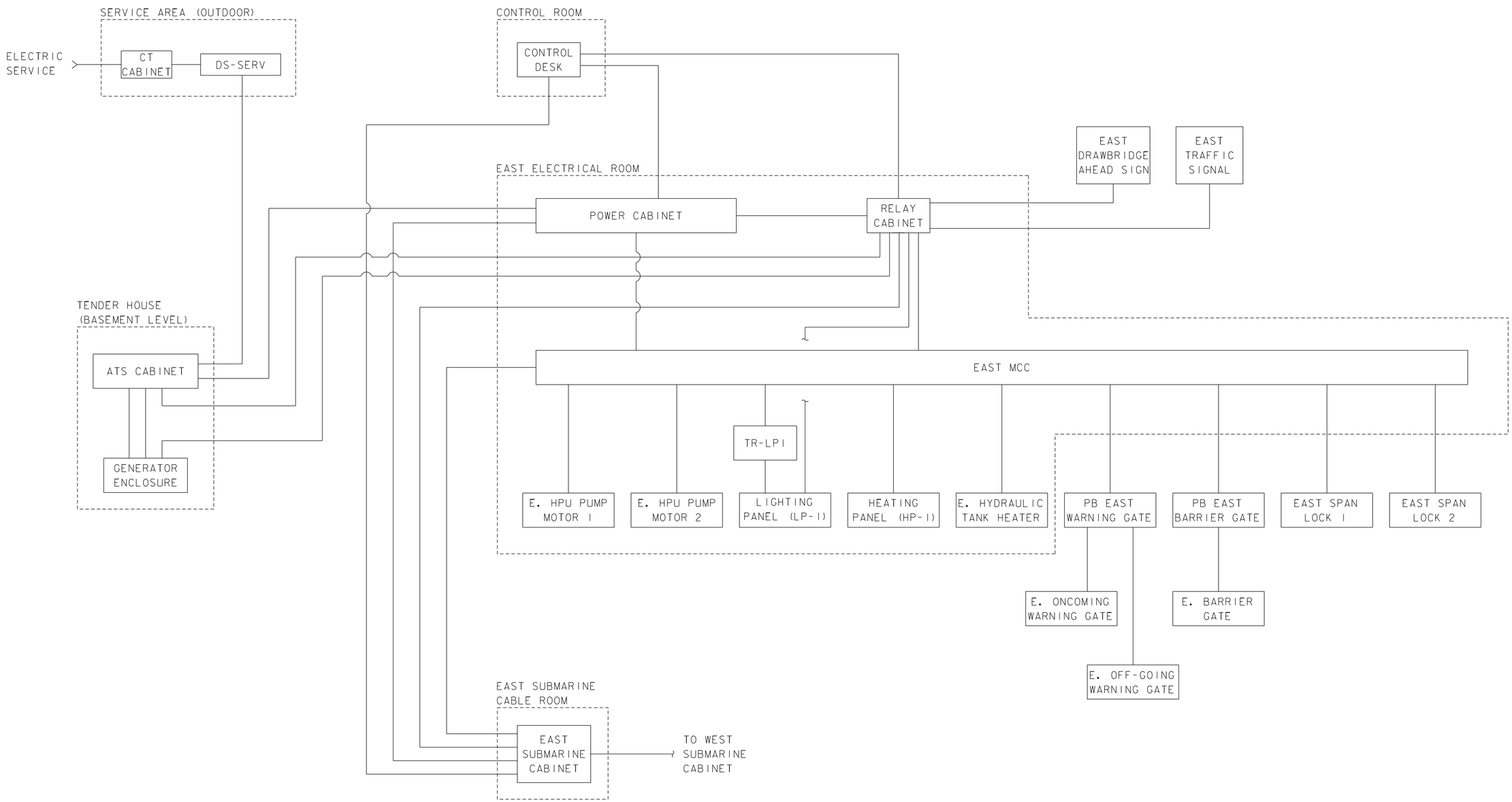

PROGRESS PLANS

PROJECT NAME: NORTH HERO GRAND ISLE BRIDGE	
PROJECT NUMBER: BHF 028-1(26)	
FILE NAME: z12b142blckdiai.dgn	PLOT DATE: 4/25/2016
PROJECT LEADER: T. FRENCH	DRAWN BY: S. SCHULMAN
DESIGNED BY: Y. ADELEKAN	CHECKED BY: K. HAJJEH
CONDUIT BLOCK DIAGRAM 1 OF 2	SHEET 155 OF 196

NOTES

1. FOR LEGEND, ABBREVIATIONS, AND GENERAL NOTES, SEE SHEET NO. XXX

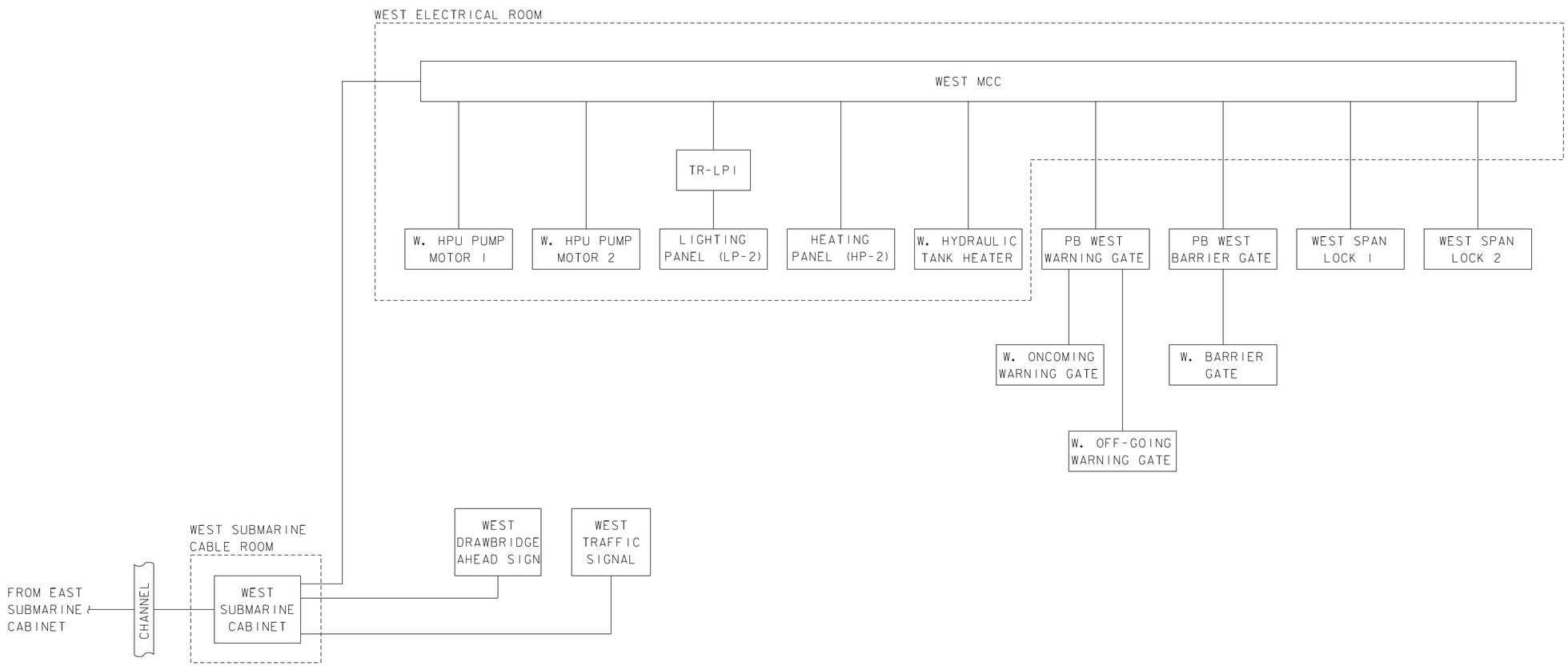

PROGRESS PLANS

PROJECT NAME:	NORTH HERO GRAND ISLE BRIDGE
PROJECT NUMBER:	BHF 028-1(26)

FILE NAME: zl2bl42blckdia2.dgn	PLOT DATE: 4/25/2016
PROJECT LEADER: T. FRENCH	DRAWN BY: S. SCHULMAN
DESIGNED BY: Y. ADELEKAN	CHECKED BY: K. HAJJEH
CONDUIT BLOCK DIAGRAM 2 OF 2	SHEET 156 OF 196

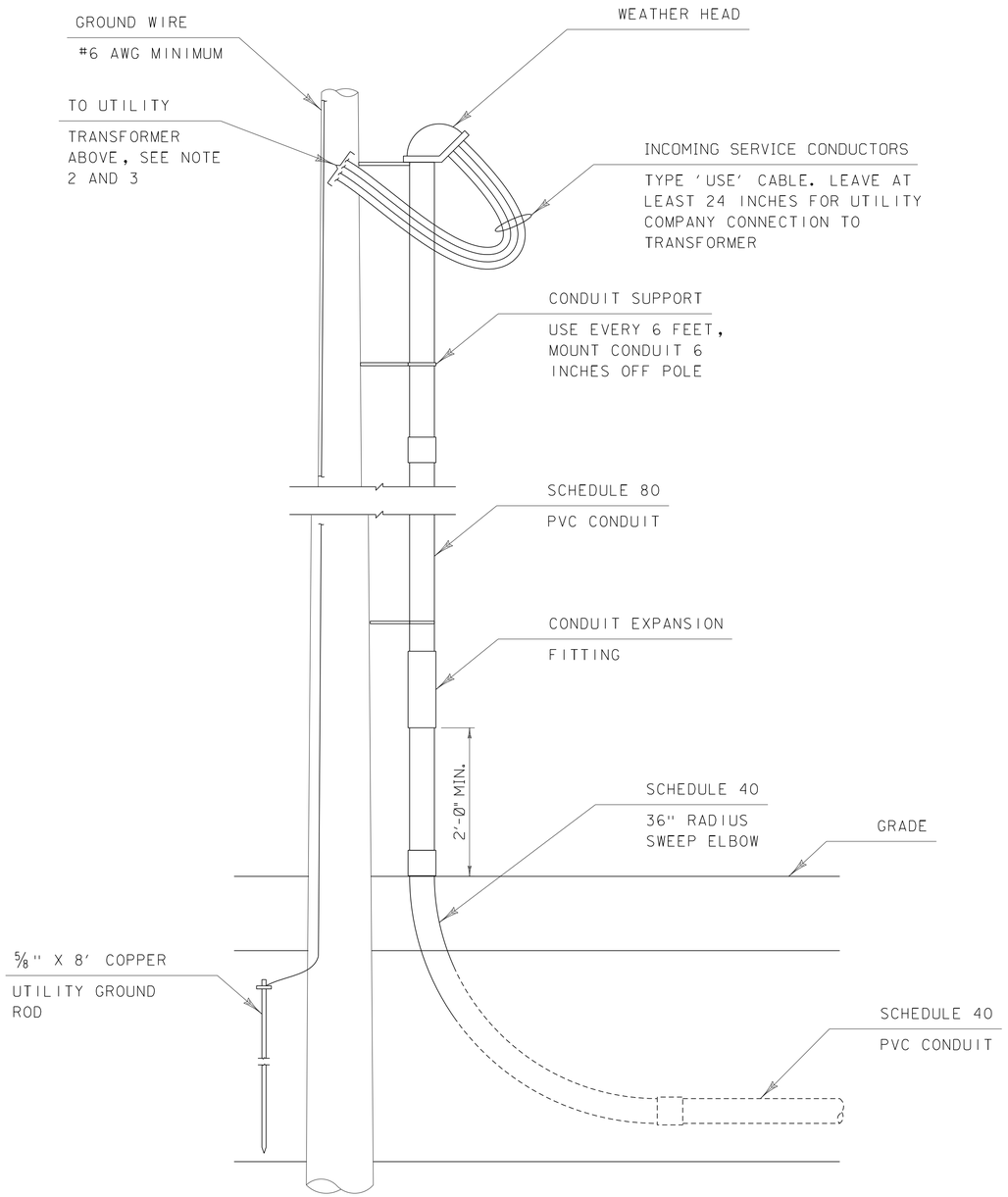

ELECTRIC UTILITY RISER POLE DETAILS

NOT TO SCALE

NOTES

1. FOR LEGEND, ABBREVIATIONS, AND GENERAL NOTES, SEE SHEET NO. XXX
2. UTILITY TRANSFORMER SHALL BE SUPPLIED BY VERMONT ELECTRIC COOP. (VT ELECTRIC).
3. CONNECTION TO TRANSFORMER SHALL BE MADE BY VT ELECTRIC UPON APPROVAL FROM THE VERMONT DIVISION OF FIRE AND SAFETY. AN APPROVED ENERGIZING PERMIT IS REQUIRED. SECURE ENERGIZING PERMIT WITH THE VERMONT DIVISION OF FIRE AND SAFETY.
4. INSTALLATION OF THE NEW ELECTRIC SERVICE EQUIPMENT SHALL BE PERFORMED BY A MASTER ELECTRICIAN LICENSED IN THE STATE OF VERMONT.
5. INSTALLATION SHALL BE IN ACCORDANCE WITH THE LATEST VERSION OF THE NATIONAL ELECTRIC CODE AND THE LATEST VERSION OF THE "VERMONT UTILITIES ELECTRIC SERVICE REQUIREMENTS" MANUAL.

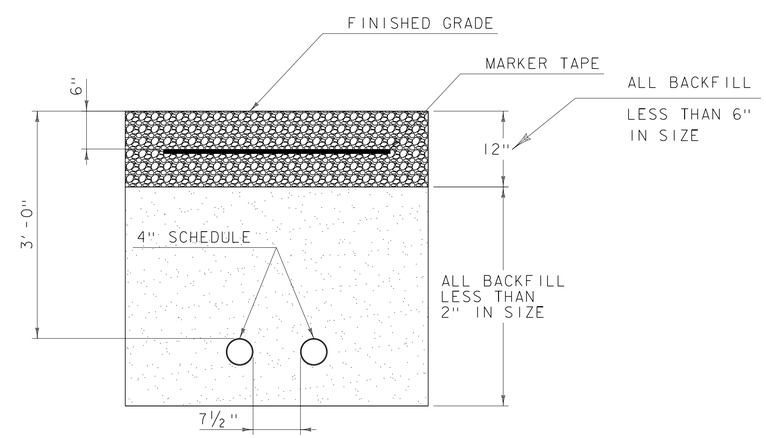

CONDUIT TRENCH DETAILS

SCALE: 1" = 1'-0"

PROGRESS PLANS

HDR

PROJECT NAME: NORTH HERO GRAND ISLE BRIDGE	
PROJECT NUMBER: BHF 028-1(26)	
FILE NAME: zi2bl42utildet.dgn	PLOT DATE: 4/25/2016
PROJECT LEADER: T. FRENCH	DRAWN BY: R. DA SILVA
DESIGNED BY: Y. ADELEKAN	CHECKED BY: K. HAJJEH
ELECTRIC UTILITY DETAILS	SHEET 157 OF 196

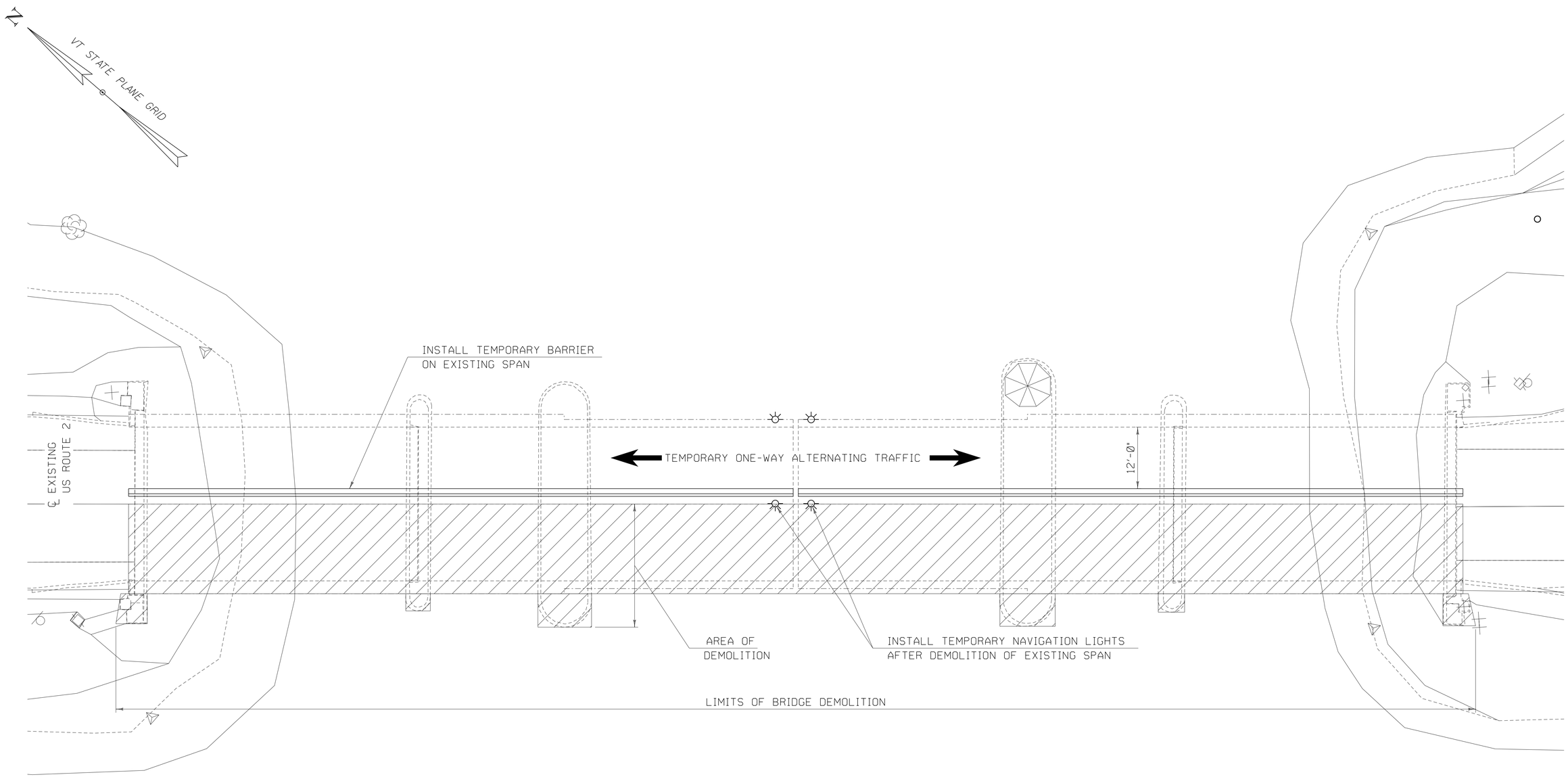

CONSTRUCTION STAGE 1 - PLAN

SCALE 1" = 10'-0"

10 0 10

PROGRESS PLANS

HDR

PROJECT NAME: NORTH HERO GRAND ISLE BRIDGE	
PROJECT NUMBER: BHF 028-1(26)	
FILE NAME: z12b142constpl1.dgn	PLOT DATE: 4/25/2016
PROJECT LEADER: T. FRENCH	DRAWN BY: P. MONTICCIOLO
DESIGNED BY: H. PROTIN	CHECKED BY: P. DAVIS
CONSTRUCTION STAGE 1 - PLAN	SHEET ~~50~~ 159 OF 196

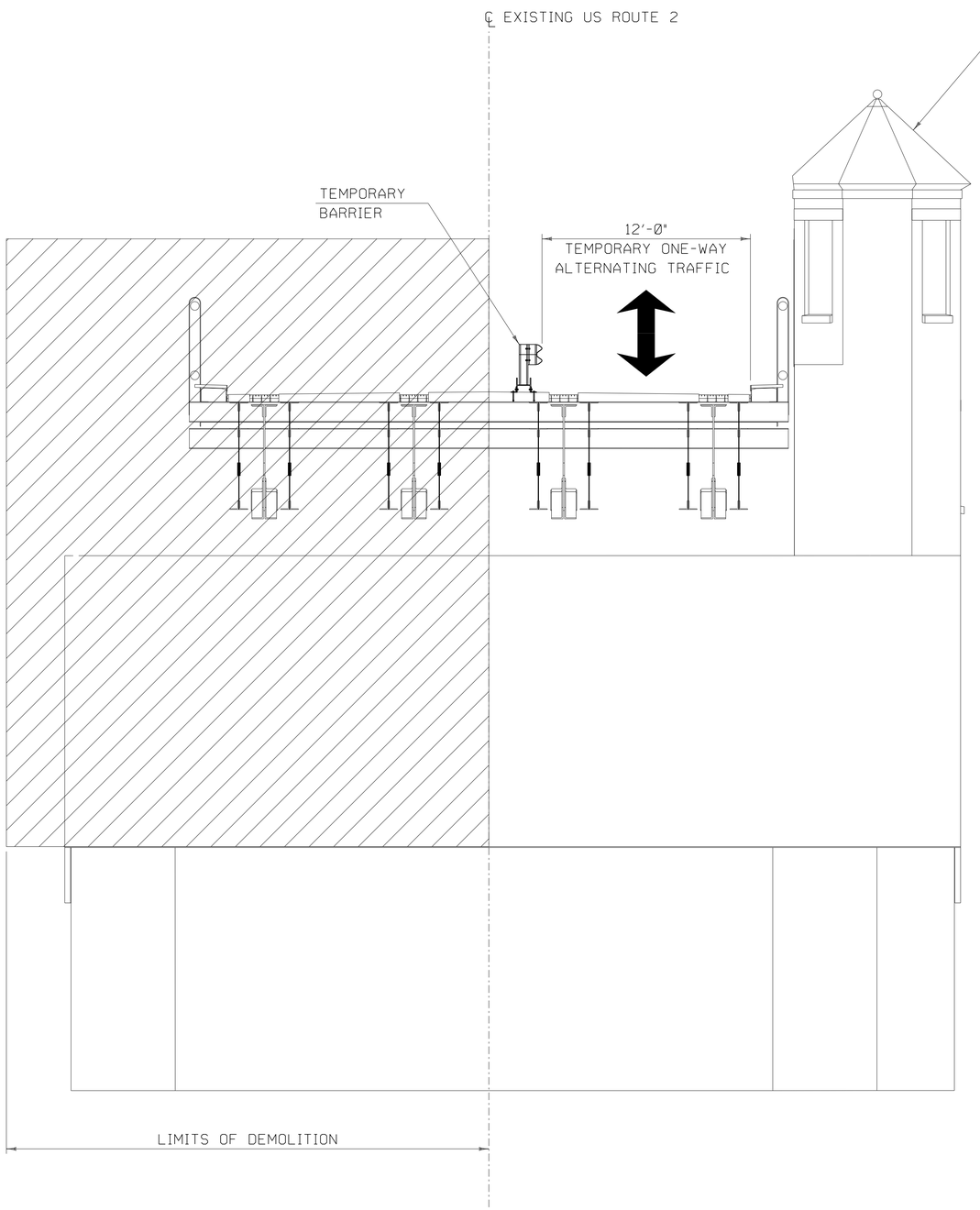

STAGE 1 - TYPICAL COUNTERWEIGHT SPAN SECTION

SCALE ¼" = 1'-0"

4' 0 4'

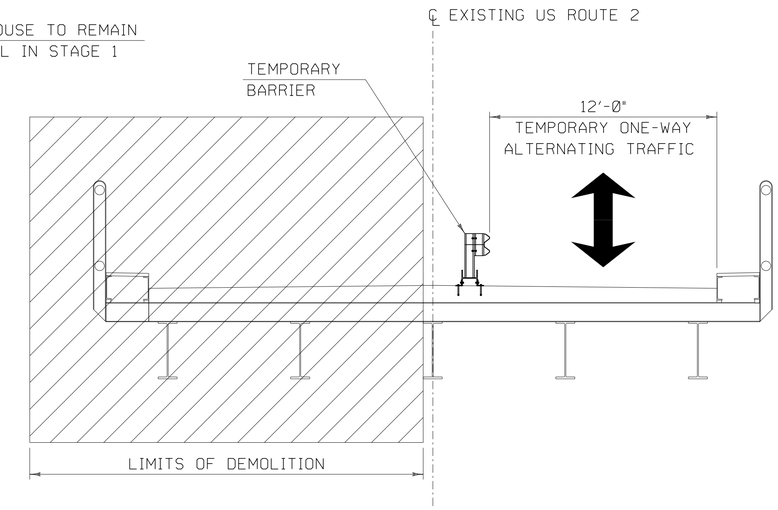

STAGE 1 - TYPICAL APPROACH SPAN SECTION

SCALE ¼" = 1'-0"

4' 0 4'

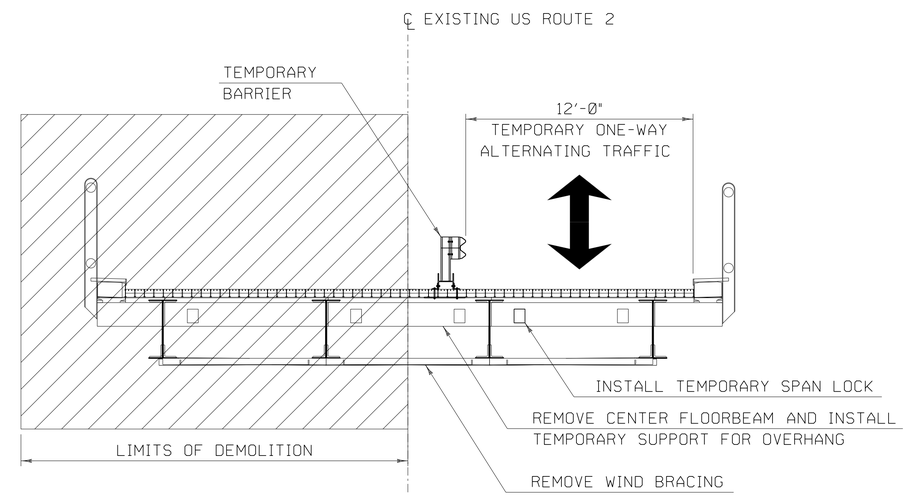

STAGE 1 - TYPICAL BASCULE SPAN SECTION

SCALE ¼" = 1'-0"

4' 0 4'

PROGRESS PLANS

PROJECT NAME: NORTH HERO GRAND ISLE BRIDGE	
PROJECT NUMBER: BHF 028-1(26)	
FILE NAME: z12b142constxs1.dgn	PLOT DATE: 4/25/2016
PROJECT LEADER: T. FRENCH	DRAWN BY: S. SANTRICH
DESIGNED BY: H. PROTIN	CHECKED BY: P. DAVIS
CONSTRUCTION STAGE 1 ELEVATION VIEW	SHEET 160 OF 196

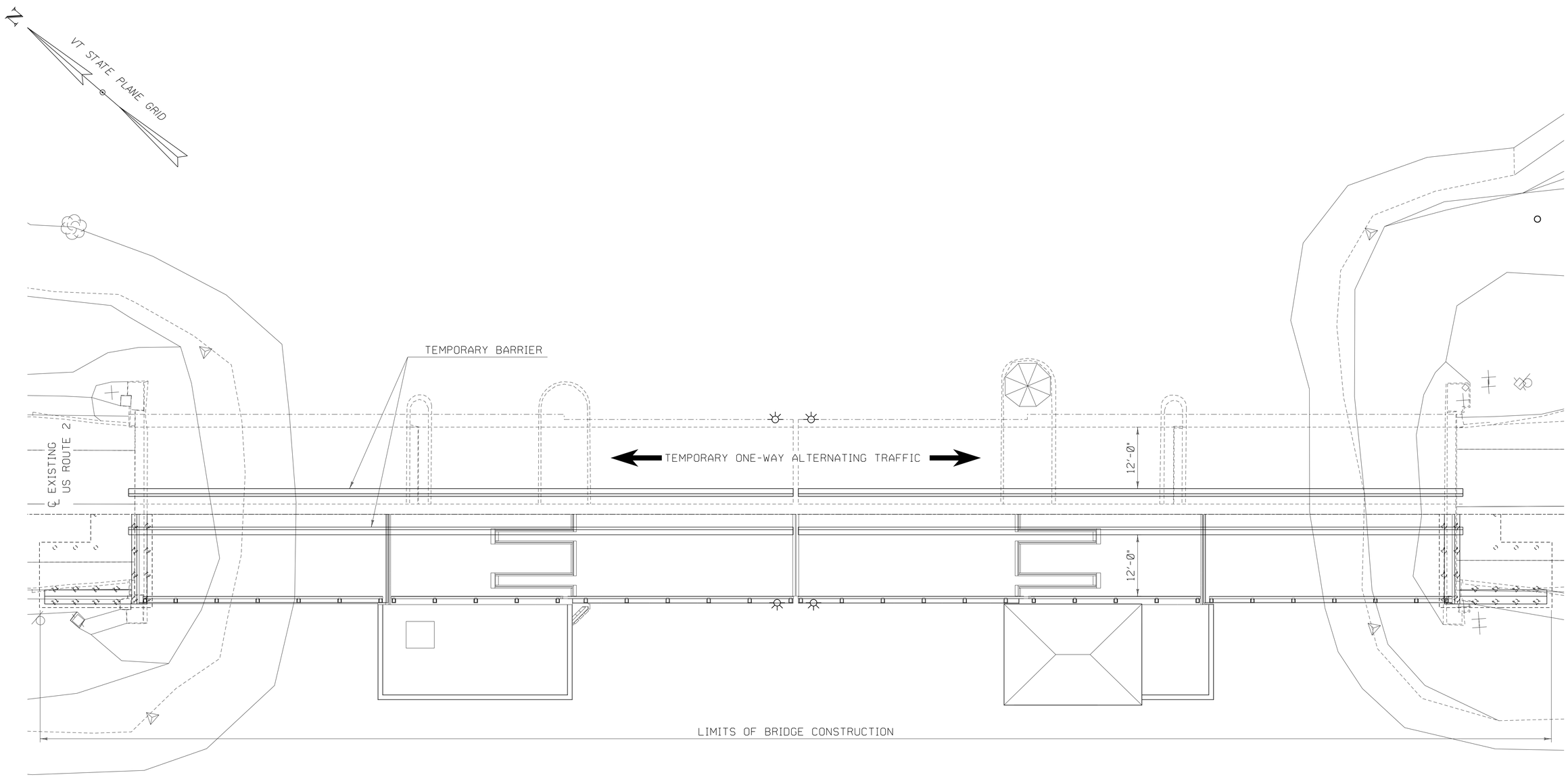

CONSTRUCTION STAGE 2 - PLAN

SCALE 1" = 10'-0"

10 0 10

PROGRESS PLANS

PROJECT NAME: NORTH HERO GRAND ISLE BRIDGE
PROJECT NUMBER: BHF 028-1(26)

FILE NAME: z12b142constpl2.dgn
PROJECT LEADER: T. FRENCH
DESIGNED BY: H. PROTIN
CONSTRUCTION STAGE 2 - PLAN

PLOT DATE: 4/25/2016
DRAWN BY: P. MONTICCIOLO
CHECKED BY: P. DAVIS
SHEET ~~52~~ 161 OF 196

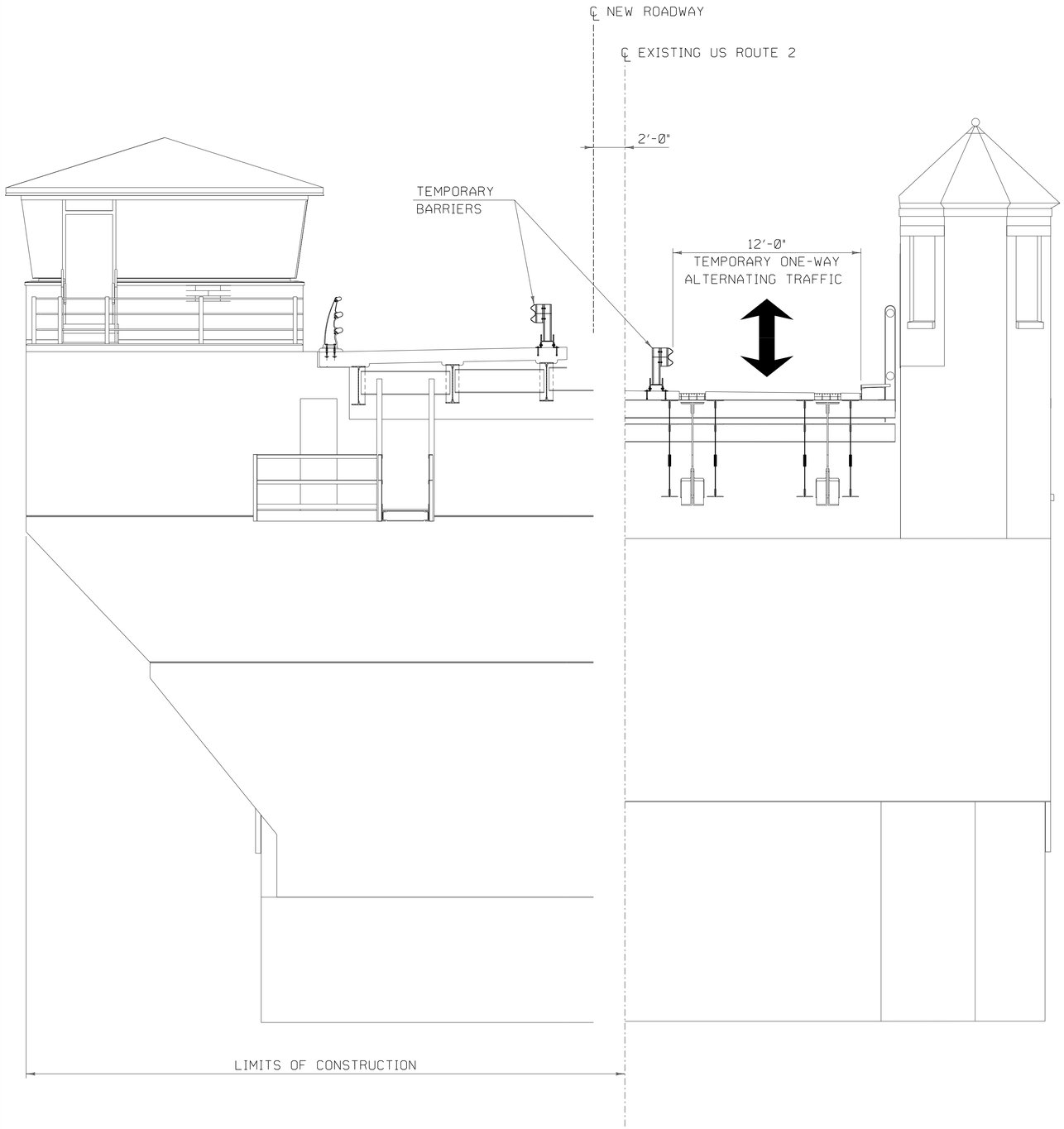

STAGE 2 - TYPICAL COUNTERWEIGHT SPAN SECTION

SCALE 1/4" = 1'-0"

4' 0 4'

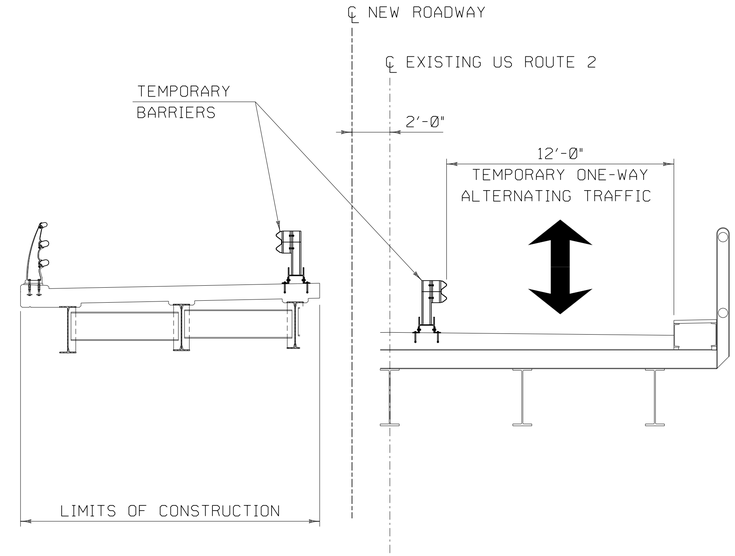

STAGE 2 - TYPICAL APPROACH SPAN SECTION

SCALE 1/4" = 1'-0"

4' 0 4'

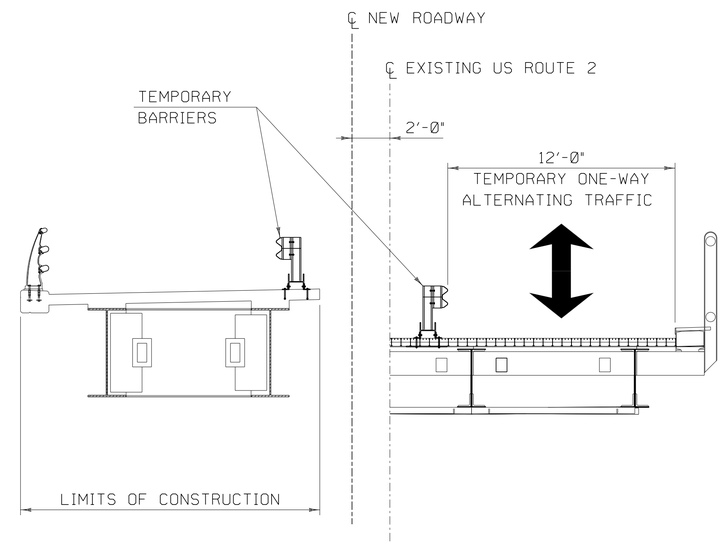

STAGE 2 - TYPICAL BASCULE SPAN SECTION

SCALE 1/4" = 1'-0"

4' 0 4'

PROGRESS PLANS

PROJECT NAME: NORTH HERO GRAND ISLE BRIDGE	
PROJECT NUMBER: BHF 028-1(26)	
FILE NAME: z12b142constxs2.dgn	PLOT DATE: 4/25/2016
PROJECT LEADER: T. FRENCH	DRAWN BY: C. CAMMARATA
DESIGNED BY: H. PROTIN	CHECKED BY: P. DAVIS
CONSTRUCTION STAGE 2 ELEVATION VIEW	SHEET 162 OF 196

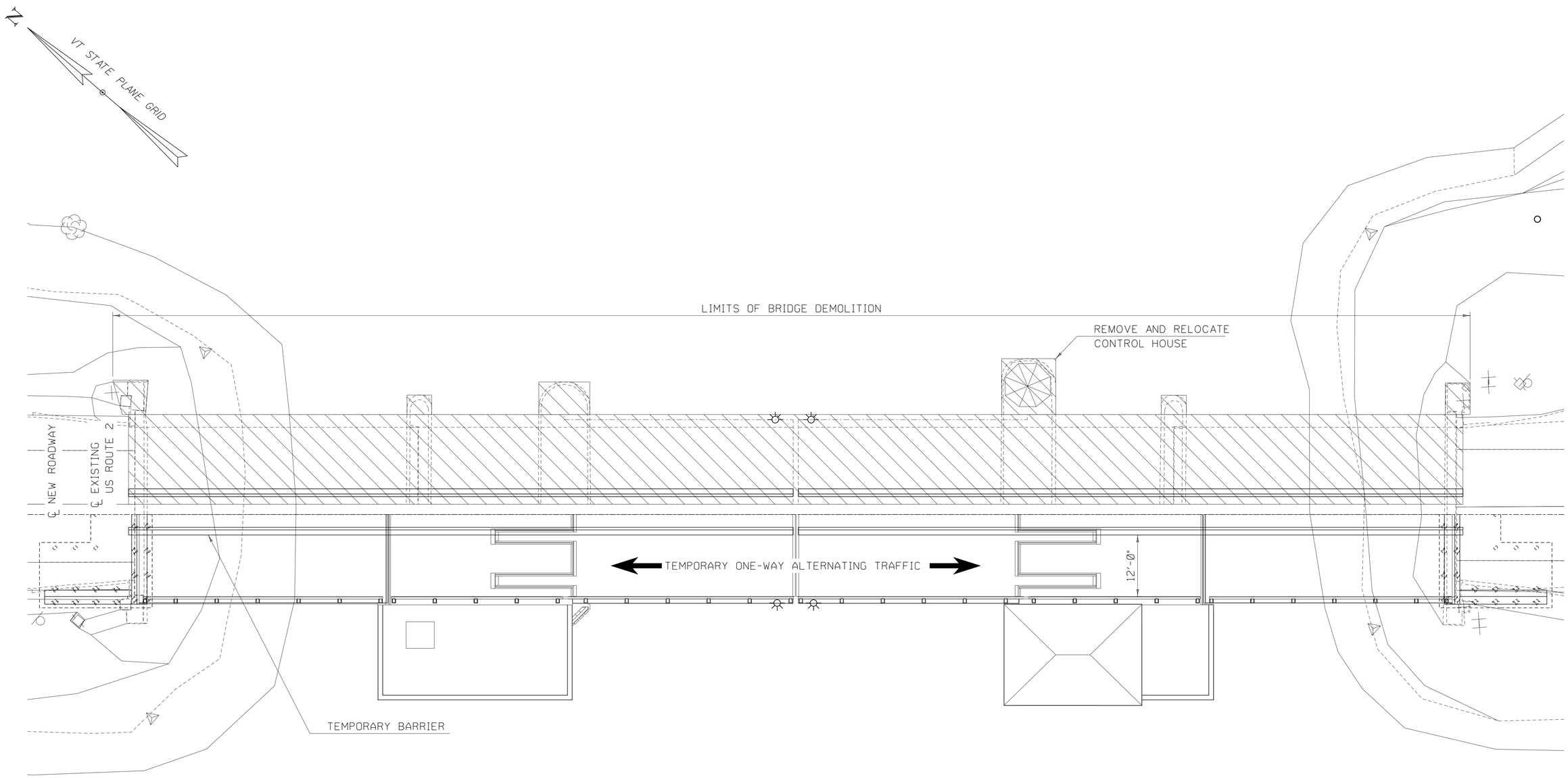

CONSTRUCTION STAGE 3 - PLAN

SCALE 1" = 10'-0"

10 0 10

PROGRESS PLANS

PROJECT NAME: NORTH HERO GRAND ISLE BRIDGE	
PROJECT NUMBER: BHF 028-1(26)	
FILE NAME: z12b142constpl3.dgn	PLOT DATE: 4/25/2016
PROJECT LEADER: T. FRENCH	DRAWN BY: P. MONTICCIOLO
DESIGNED BY: H. PROTIN	CHECKED BY: P. DAVIS
CONSTRUCTION STAGE 3 - PLAN	SHEET ~~54~~ 163 OF 196

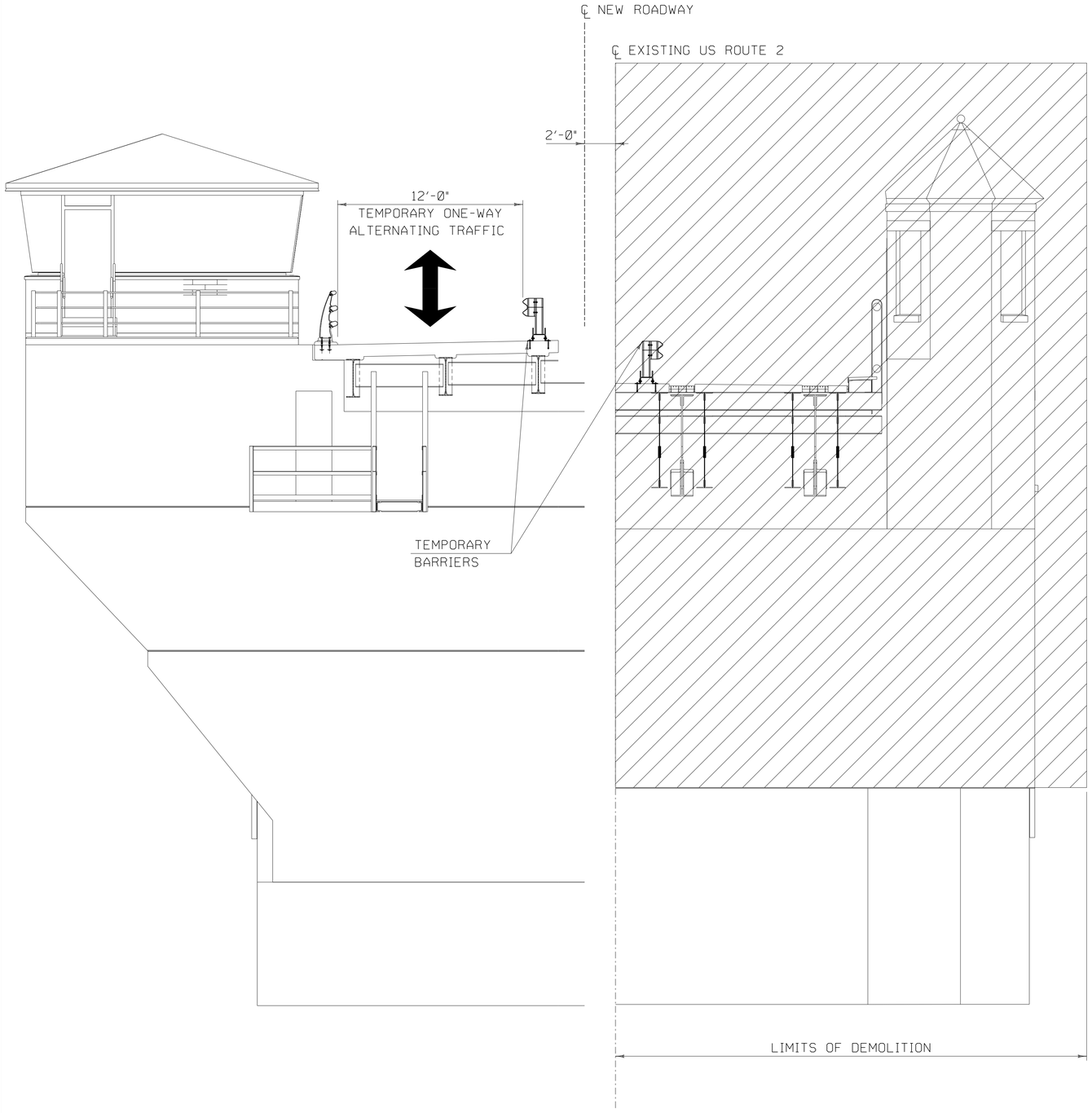

STAGE 3 - TYPICAL COUNTERWEIGHT SPAN SECTION

SCALE 1/4" = 1'-0"

4' 0 4'

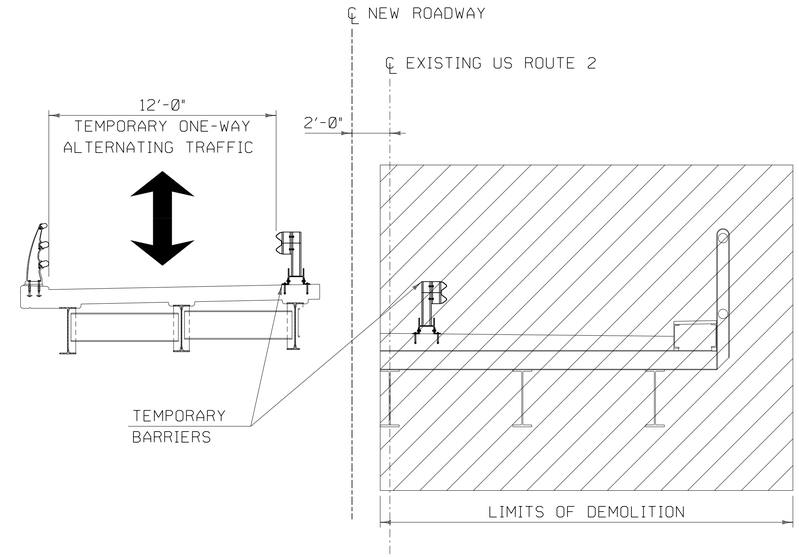

STAGE 3 - TYPICAL APPROACH SPAN SECTION

SCALE 1/4" = 1'-0"

4' 0 4'

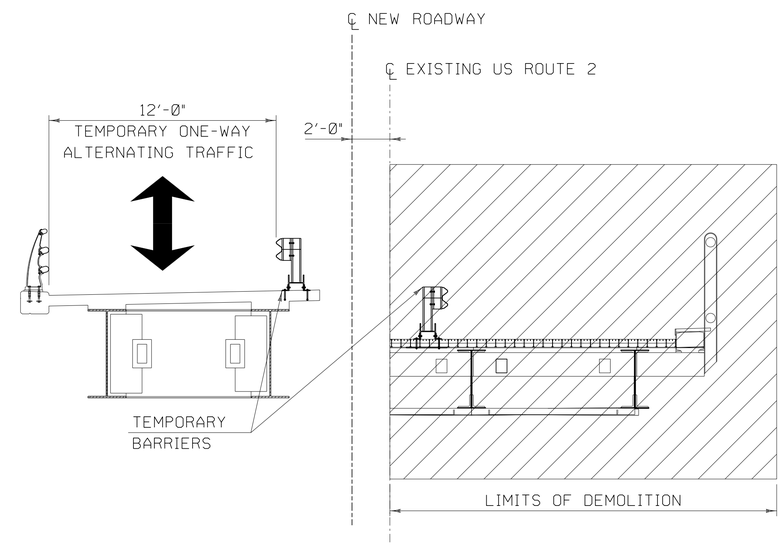

STAGE 3 - TYPICAL BASCULE SPAN SECTION

SCALE 1/4" = 1'-0"

4' 0 4'

PROGRESS PLANS

PROJECT NAME: NORTH HERO GRAND ISLE BRIDGE	
PROJECT NUMBER: BHF 028-1(26)	
FILE NAME: z12b142constxs3.dgn	PLOT DATE: 4/25/2016
PROJECT LEADER: T. FRENCH	DRAWN BY: C. CAMMARATA
DESIGNED BY: H. PROTIN	CHECKED BY: P. DAVIS
CONSTRUCTION STAGE 3 ELEVATION VIEW	SHEET 164 OF 196

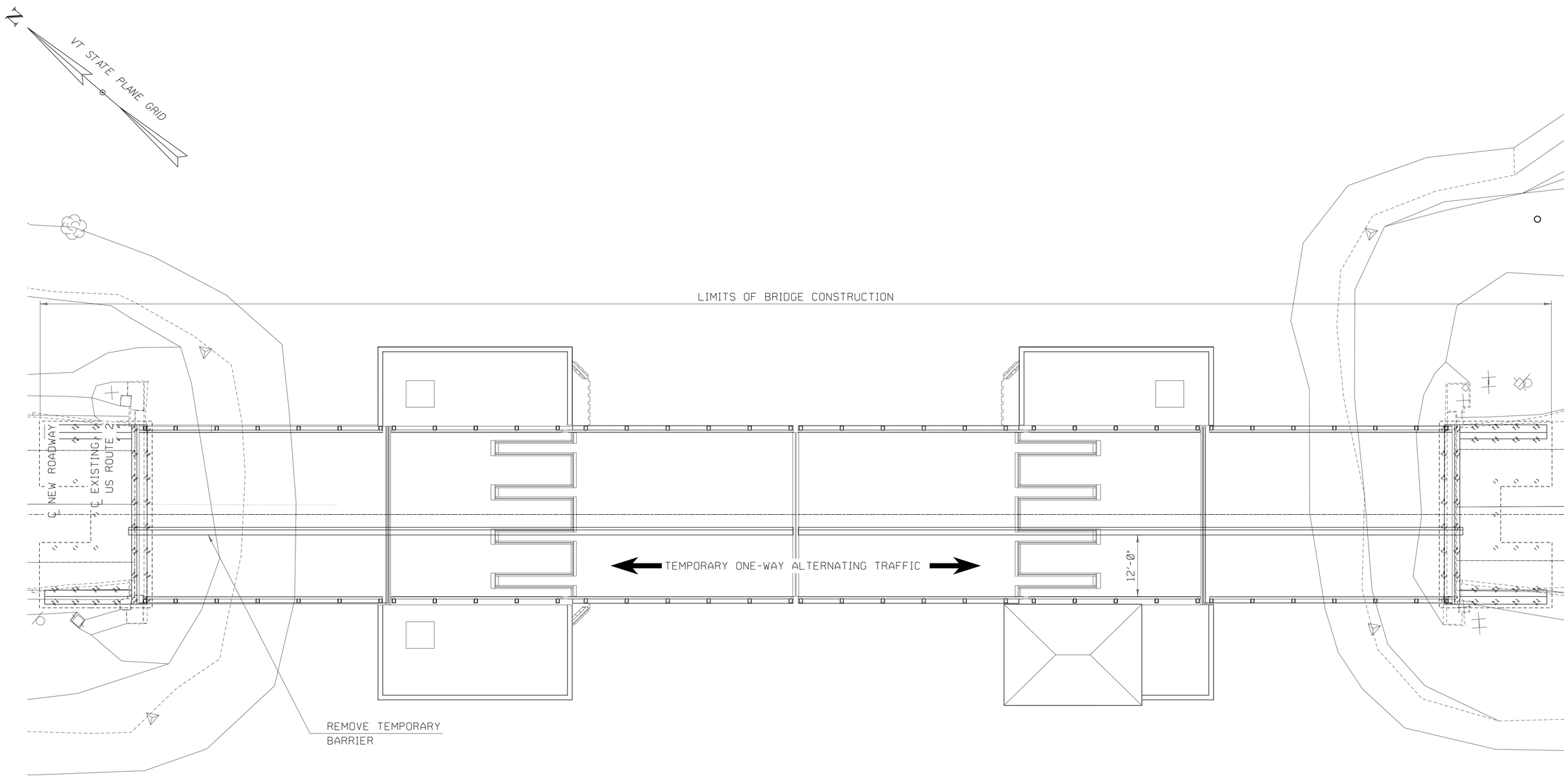

CONSTRUCTION STAGE 4 - PLAN

SCALE 1" = 10'-0"

10 0 10

PROGRESS PLANS

HDR

PROJECT NAME: NORTH HERO GRAND ISLE BRIDGE	
PROJECT NUMBER: BHF 028-1(26)	
FILE NAME: z12B142constpl4.dgn	PLOT DATE: 4/25/2016
PROJECT LEADER: T. FRENCH	DRAWN BY: P. MONTICCIOLO
DESIGNED BY: H. PROTIN	CHECKED BY: P. DAVIS
CONSTRUCTION STAGE 4 - PLAN	SHEET ~~56~~ 165 OF 196

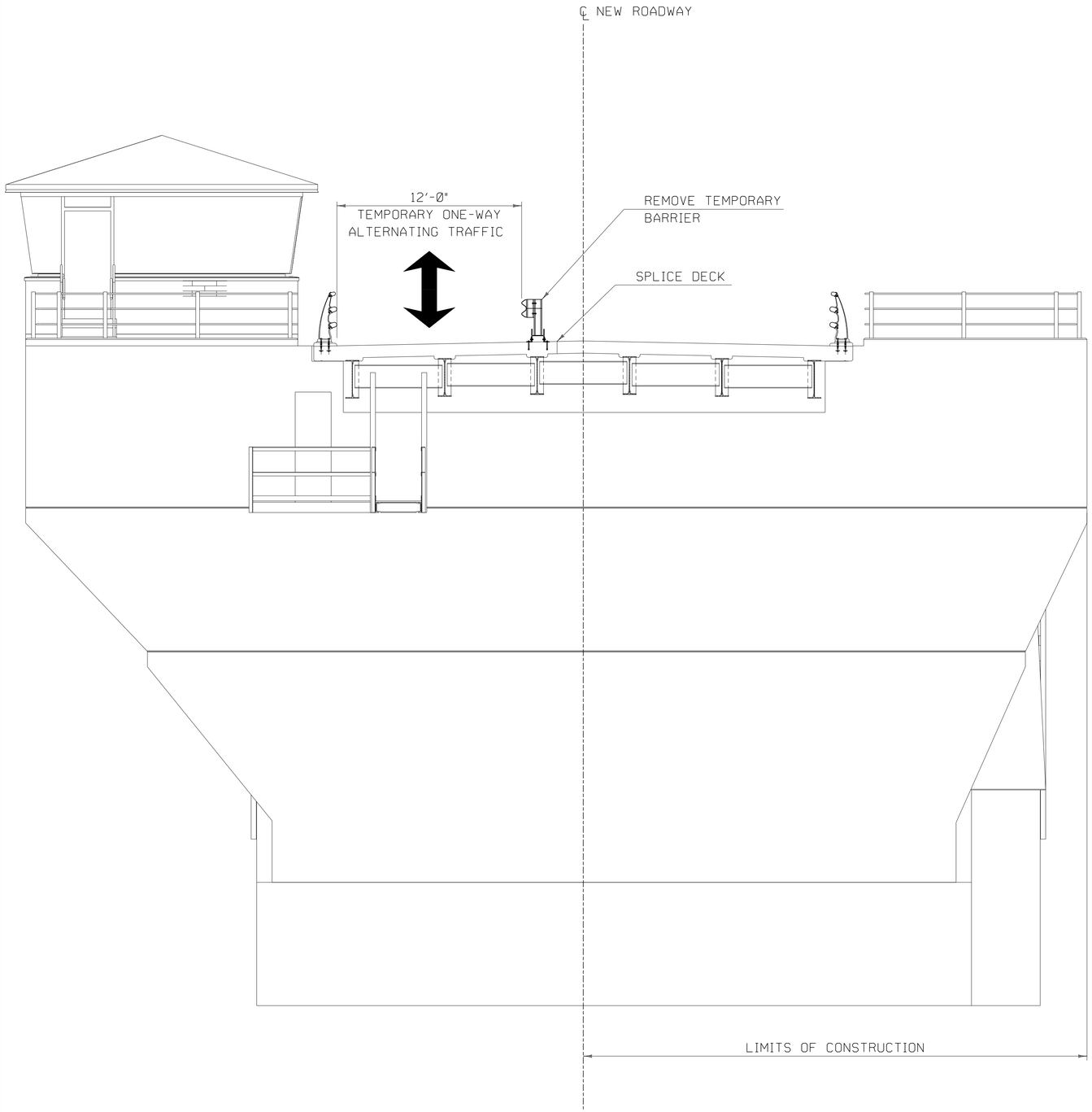

STAGE 4 - TYPICAL COUNTERWEIGHT SPAN SECTION

SCALE 1/4" = 1'-0"

4' 0 4'

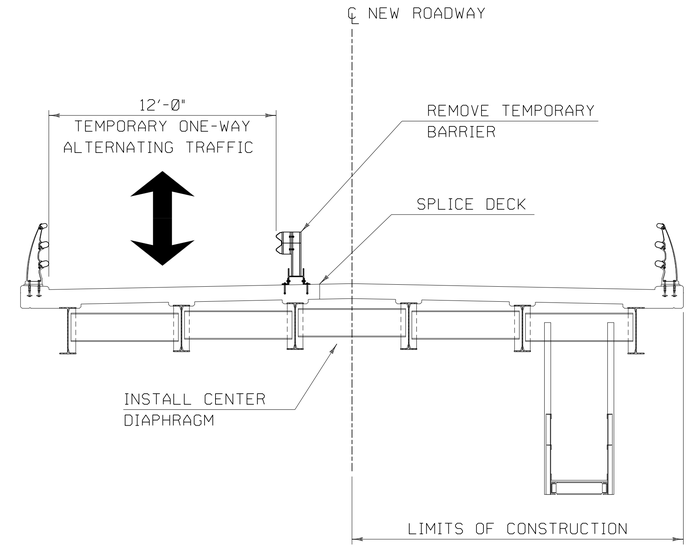

STAGE 4 - TYPICAL APPROACH SPAN SECTION

SCALE 1/4" = 1'-0"

4' 0 4'

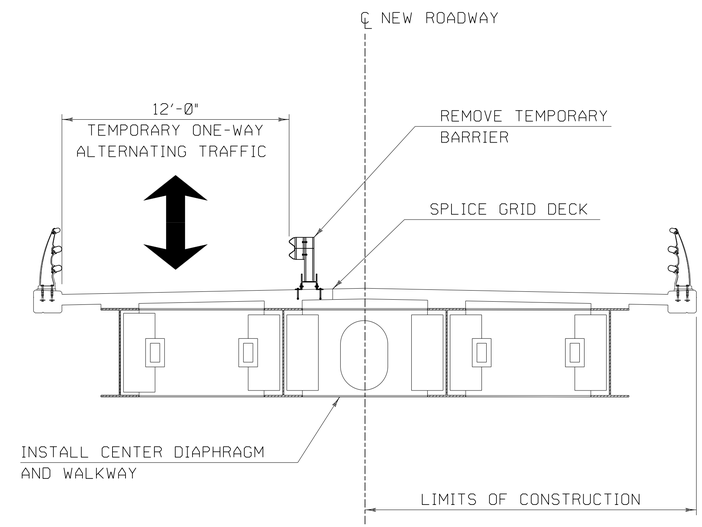

STAGE 4 - TYPICAL BASCULE SPAN SECTION

SCALE 1/4" = 1'-0"

4' 0 4'

PROGRESS PLANS

PROJECT NAME: NORTH HERO GRAND ISLE BRIDGE	
PROJECT NUMBER: BHF 028-1(26)	
FILE NAME: z12b142constxs4.dgn	PLOT DATE: 4/25/2016
PROJECT LEADER: T. FRENCH	DRAWN BY: C. CAMMARATA
DESIGNED BY: H. PROTIN	CHECKED BY: XXX
CONSTRUCTION STAGE 4 ELEVATION VIEW	SHEET 166 OF 196

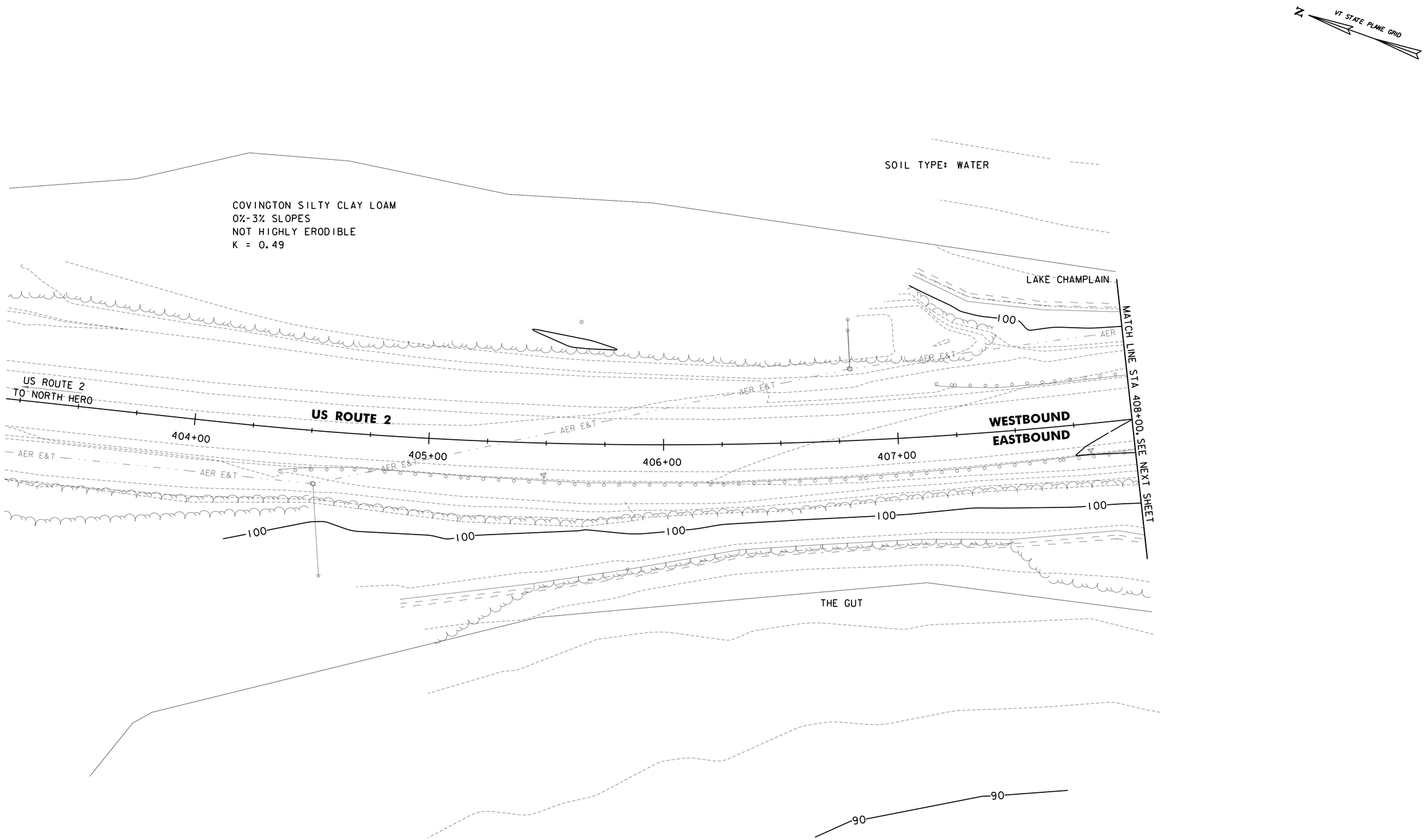

PROGRESS PLANS

SCALE 1" = 20'-0"
20 0 20

CHA

PROJECT NAME: NORTH HERO GRAND ISLE BRIDGE	
PROJECT NUMBER: BHF 028-1(26)	
FILE NAME: z12b142erobdr_ex.dgn	PLOT DATE: 4/29/2016
PROJECT LEADER: D. GOZALKOWSKI	DRAWN BY: A. KIRBY
DESIGNED BY: J. PARRELLI	CHECKED BY: J. SHIELDS
EPSC EXISTING SITE PLAN SHEET 1	SHEET 169 OF 196

FILE NAME = V:\Projects\ANY\K3\28173\CADD_MSTN\12b142\Consultants\z12b142erobdr_ex.dgn
DATE/TIME = 4/29/2016
USER = 5237

PROGRESS PLANS

SCALE 1" = 20'-0"
20 0 20

CHA

PROJECT NAME: NORTH HERO GRAND ISLE BRIDGE	
PROJECT NUMBER: BHF 028-1(26)	
FILE NAME: z12b142erobdr_ex.dgn	PLOT DATE: 4/29/2016
PROJECT LEADER: D. GOZALKOWSKI	DRAWN BY: A. KIRBY
DESIGNED BY: J. PARRELLI	CHECKED BY: J. SHIELDS
EPSC EXISTING SITE PLAN SHEET 2	SHEET 170 OF 196

FILE NAME = V:\Projects\ANY\K3\28173\CADD_MSTN\12b142\Consultants\z12b142erobdr_ex.dgn
DATE/TIME = 4/29/2016
USER = 5237

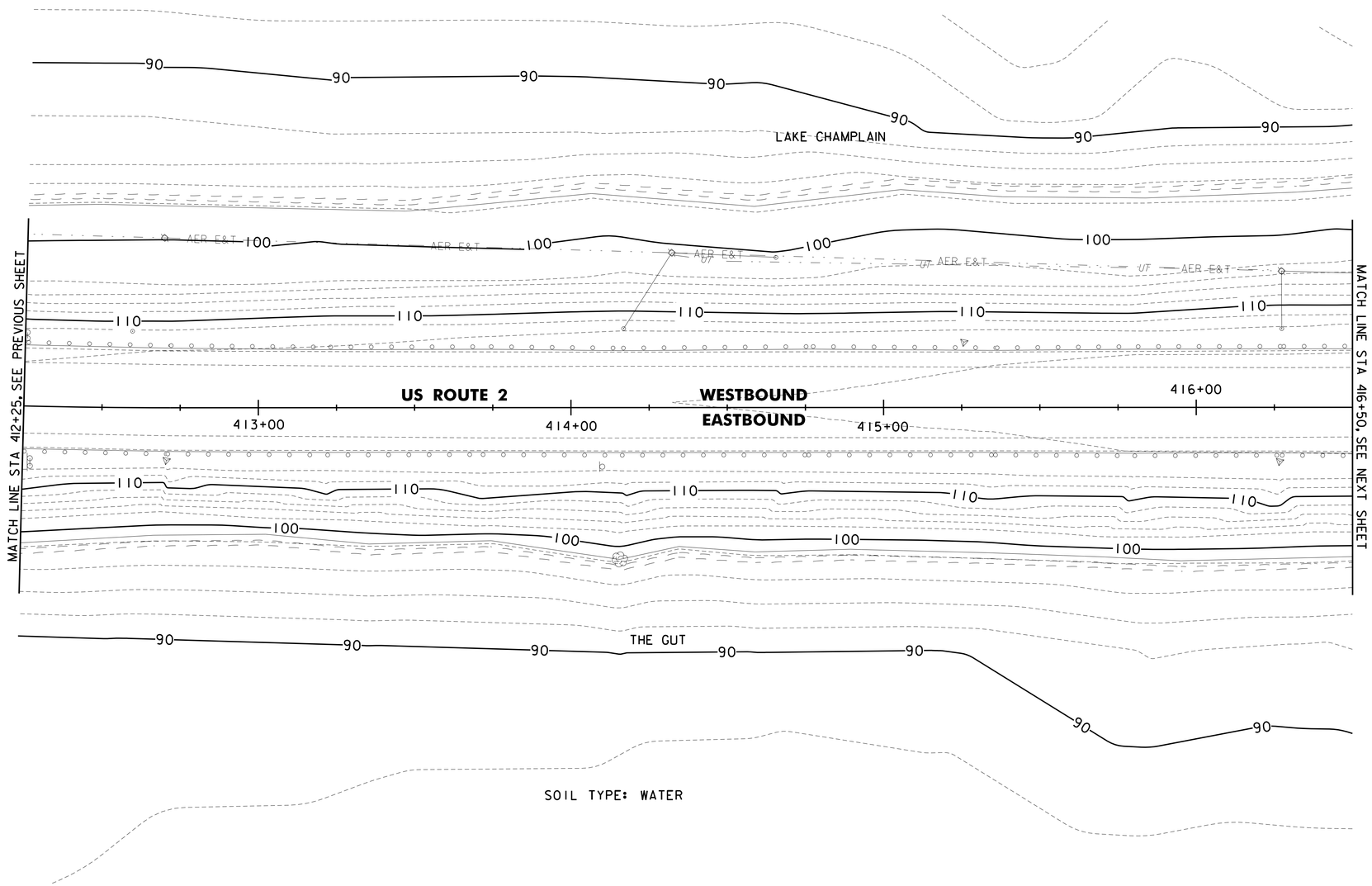

PROGRESS PLANS

SCALE 1" = 20'-0"
20 0 20

CHA

PROJECT NAME: NORTH HERO GRAND ISLE BRIDGE	
PROJECT NUMBER: BHF 028-1(26)	
FILE NAME: z12b142erobdr_ex.dgn	PLOT DATE: 4/29/2016
PROJECT LEADER: D. GOZALKOWSKI	DRAWN BY: A. KIRBY
DESIGNED BY: J. PARRELLI	CHECKED BY: J. SHIELDS
EPSC EXISTING SITE PLAN SHEET 3	SHEET 171 OF 196

FILE NAME = V:\Projects\ANY\K3\28173\CADD_MSTN\12b142\Consultants\z12b142erobdr_ex.dgn
DATE/TIME = 4/29/2016
USER = 5237

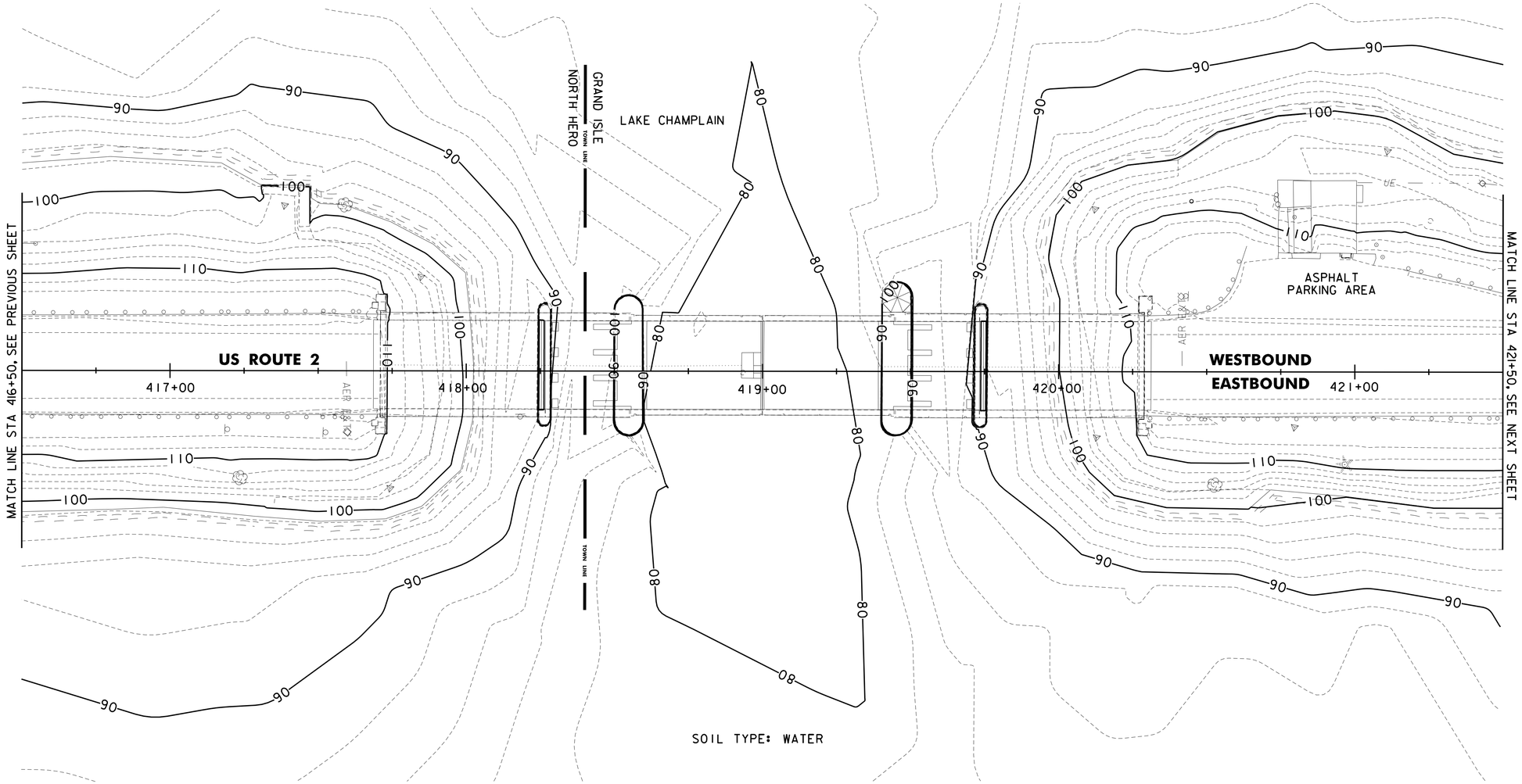

PROGRESS PLANS

SCALE 1" = 20'-0"
20 0 20

CHA

PROJECT NAME: NORTH HERO GRAND ISLE BRIDGE	
PROJECT NUMBER: BHF 028-1(26)	
FILE NAME: z12b142erobdr_ex.dgn	PLOT DATE: 4/29/2016
PROJECT LEADER: D. GOZALKOWSKI	DRAWN BY: A. KIRBY
DESIGNED BY: J. PARRELLI	CHECKED BY: J. SHIELDS
EPSC EXISTING SITE PLAN SHEET 4	SHEET 172 OF 196

FILE NAME = V:\Projects\ANY\K3\28173\CADD_MSTN\12b142\Consultants\z12b142erobdr_ex.dgn
DATE/TIME = 4/29/2016
USER = 5237

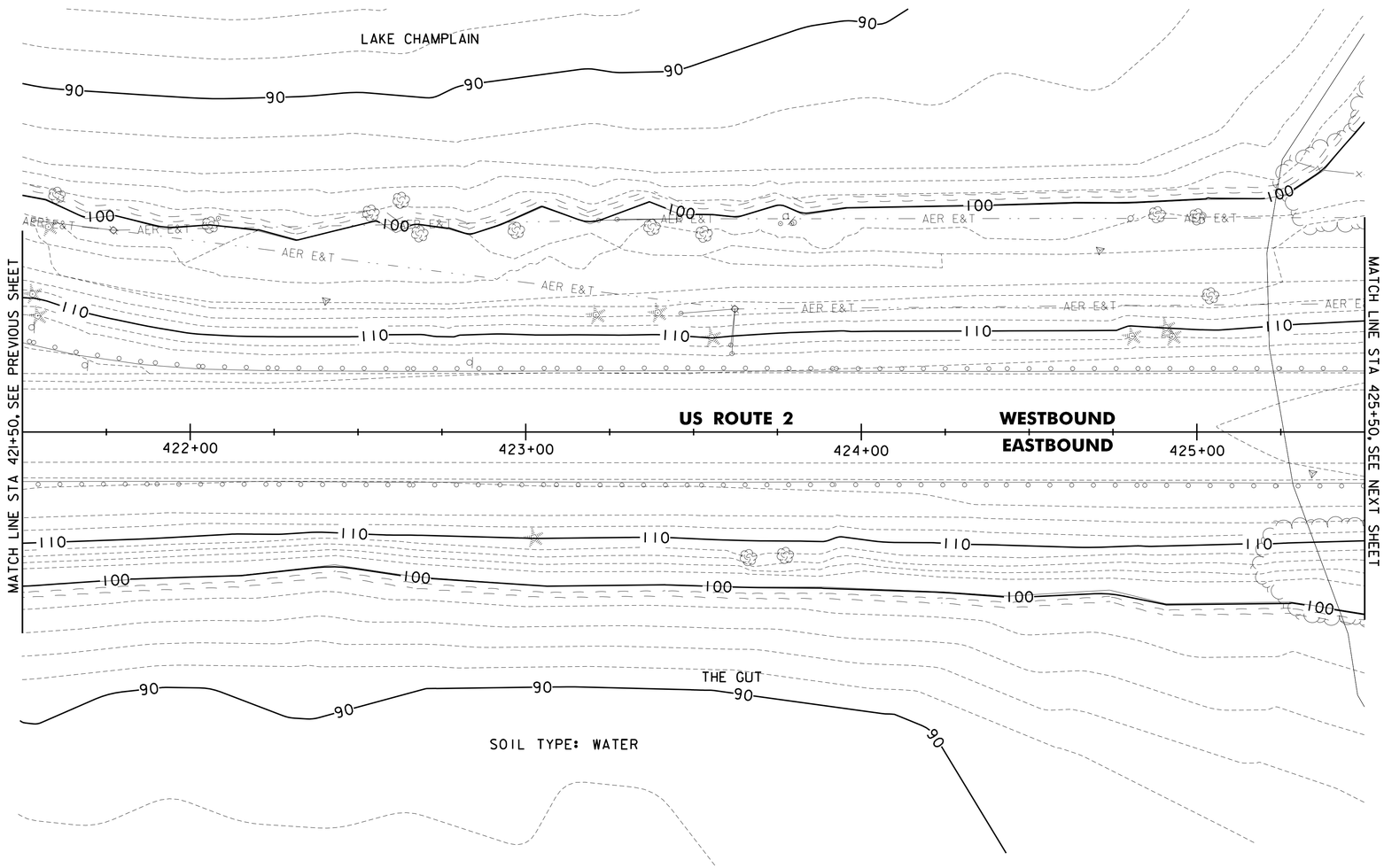

VT STATE PLANE GRID

PROGRESS PLANS

SCALE 1" = 20'-0"
20 0 20

CHA

PROJECT NAME: NORTH HERO GRAND ISLE BRIDGE	
PROJECT NUMBER: BHF 028-1(26)	
FILE NAME: z12b142erobdr_ex.dgn	PLOT DATE: 4/29/2016
PROJECT LEADER: D. GOZALKOWSKI	DRAWN BY: A. KIRBY
DESIGNED BY: J. PARRELLI	CHECKED BY: J. SHIELDS
EPSC EXISTING SITE PLAN SHEET 5	SHEET 173 OF 196

FILE NAME = V:\Projects\ANY\K3\28173\CADD_MSTN\12b142\Consultants\z12b142erobdr_ex.dgn
DATE/TIME = 4/29/2016
USER = 5237

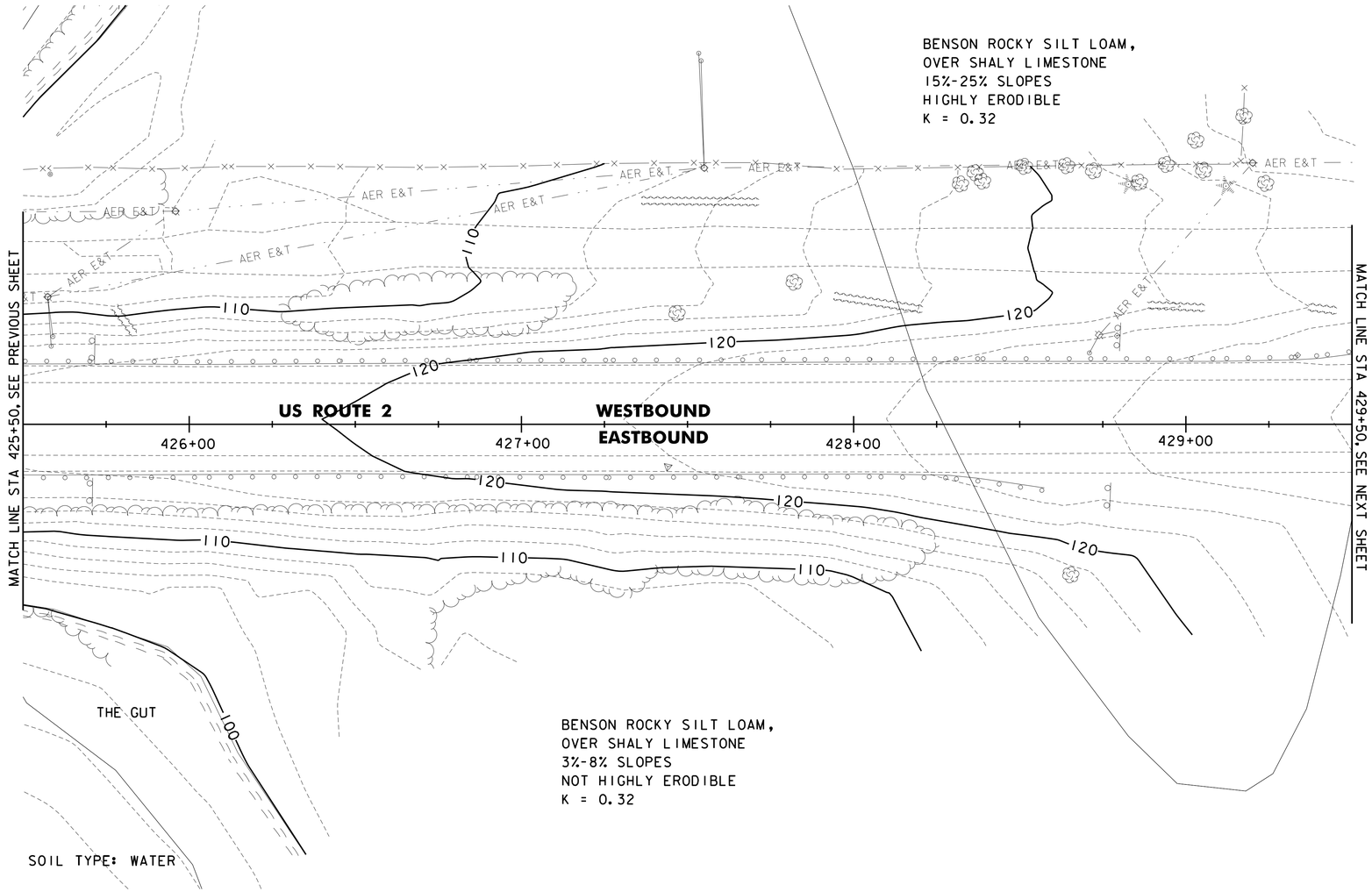

N
VT STATE PLANE GRID

PROGRESS PLANS

SCALE 1" = 20'-0"
20 0 20

CHA

PROJECT NAME: NORTH HERO GRAND ISLE BRIDGE	
PROJECT NUMBER: BHF 028-1(26)	
FILE NAME: z12b142erobdr_ex.dgn	PLOT DATE: 4/29/2016
PROJECT LEADER: D. GOZALKOWSKI	DRAWN BY: A. KIRBY
DESIGNED BY: J. PARRELLI	CHECKED BY: J. SHIELDS
EPSC EXISTING SITE PLAN SHEET 6	SHEET 174 OF 196

FILE NAME = V:\Projects\ANY\K3\28173\CADD_MSTN\12b142\Consultants\z12b142erobdr_ex.dgn
DATE/TIME = 4/29/2016
USER = 5237

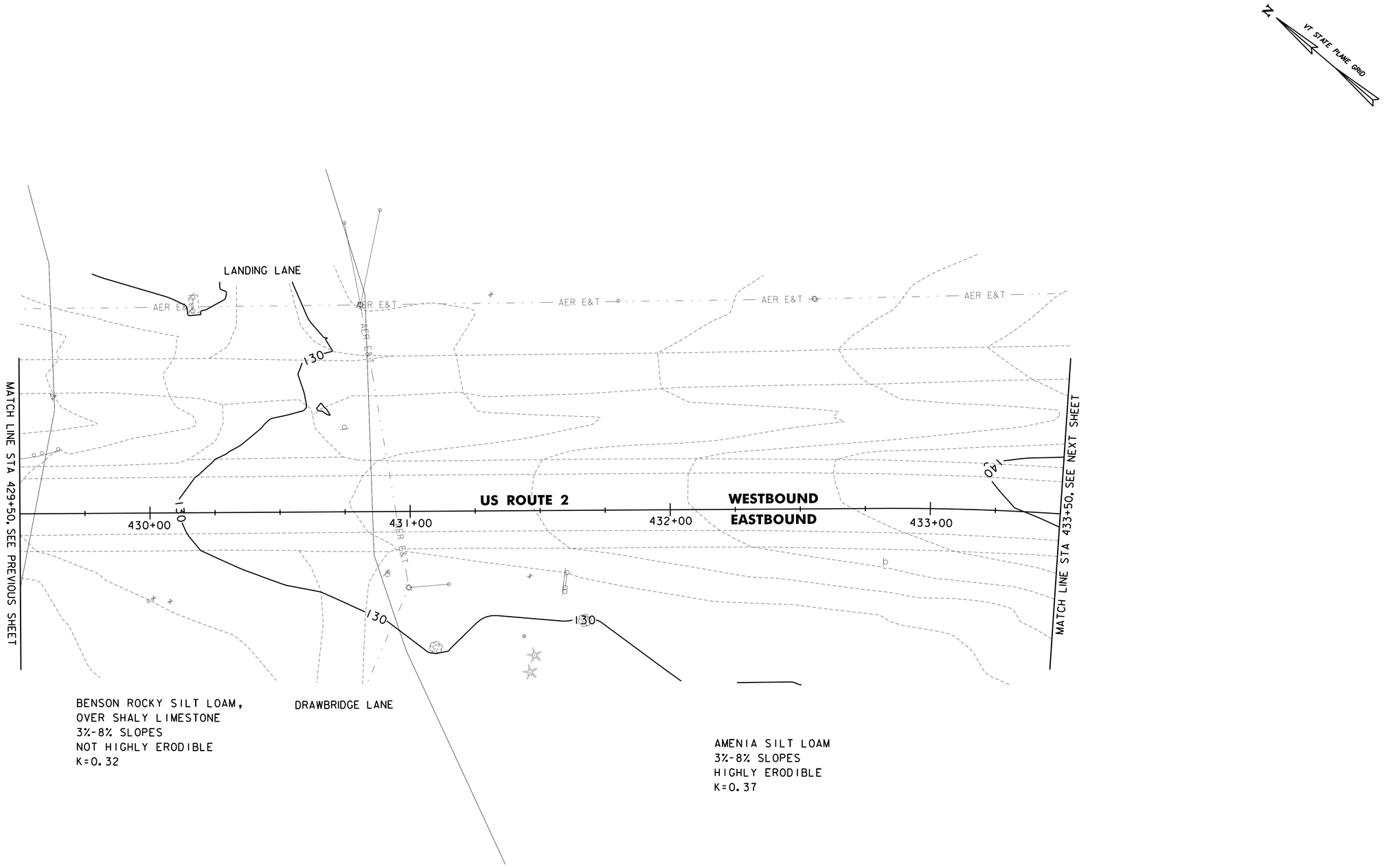

PROGRESS PLANS

SCALE 1" = 20'-0"
20 0 20

CHA

PROJECT NAME: NORTH HERO GRAND ISLE BRIDGE	
PROJECT NUMBER: BHF 028-1(26)	
FILE NAME: z12b142erobdr_ex.dgn	PLOT DATE: 4/29/2016
PROJECT LEADER: D. GOZALKOWSKI	DRAWN BY: A. KIRBY
DESIGNED BY: J. PARRELLI	CHECKED BY: J. SHIELDS
EPSC EXISTING SITE PLAN SHEET 7	SHEET 175 OF 196

FILE NAME = V:\Projects\ANY\K3\28173\CADD_MSTN\12b142\Consultants\z12b142erobdr_ex.dgn
DATE/TIME = 4/29/2016
USER = 5237

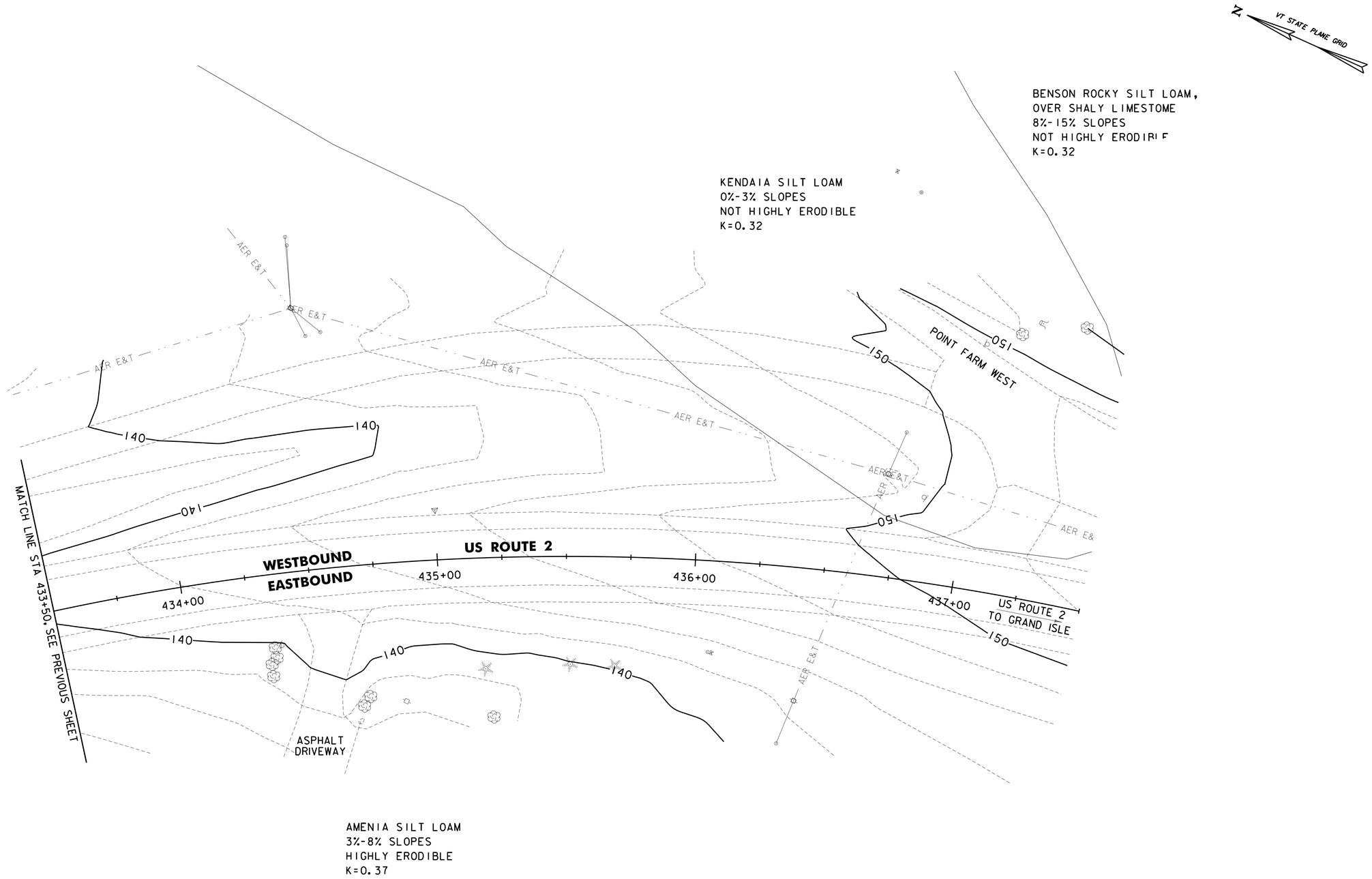

PROGRESS PLANS

SCALE 1" = 20'-0"
20 0 20

CHA

PROJECT NAME: NORTH HERO GRAND ISLE BRIDGE	
PROJECT NUMBER: BHF 028-1(26)	
FILE NAME: z12b142erobdr_ex.dgn	PLOT DATE: 4/29/2016
PROJECT LEADER: D. GOZALKOWSKI	DRAWN BY: A. KIRBY
DESIGNED BY: J. PARRELLI	CHECKED BY: J. SHIELDS
EPSC EXISTING SITE PLAN SHEET 8	SHEET 176 OF 196

FILE NAME = V:\Projects\ANY\K3\28173\CADD_MSTN\12b142\Consultants\z12b142erobdr_ex.dgn
DATE/TIME = 4/29/2016
USER = 5237

VAOT LOW GROW/FINE FESCUE MIX						
	LBS/AC					
WEIGHT	BROADCAST	HYDROSEED	NAME	LATIN NAME	GERM	PURITY
38%	57	95	CREEPING RED FESCUE	FESTUCA RUBRA VAR. RUBRA	90%	98%
29%	43.5	72.5	HARD FESCUE	FESTUCA LONGIFOLIA	85%	95%
15%	22.5	37.5	CHEWINGS FESCUE	FESTUCA RUBRA VAR. COMMUTATA	87%	95%
15%	22.5	37.5	ANNUAL RYEGRASS	LOLIUM MULTIFLORUM	90%	95%
3%	4.5	7.5	INERTS			
100%	150	250				

VAOT RURAL AREA MIX						
	LBS/AC					
WEIGHT	BROADCAST	HYDROSEED	NAME	LATIN NAME	GERM	PURITY
37.5%	22.5	45	CREEPING RED FESCUE	FESTUCA RUBRA VAR. RUBRA	85%	98%
37.5%	22.5	45	TALL FESCUE	FESTUCA ARUNDINACEA	90%	95%
5.0%	3	6	RED TOP	AGROSTIS GIGANTEA	90%	95%
15.0%	9	18	WHITE FIELD CLOVER	TRIFOLIUM REPENS	85%	98%
5.0%	3	6	ANNUAL RYE GRASS	LOLIUM MULTIFLORUM	85%	95%
100%	60	120				

GENERAL AMENDMENT GUIDANCE		
FERTILIZER	LIME	
10/20/10	AG LIME	PELLITIZED
500 LBS/AC	2 TONS/AC	1 TONS/AC

CONSTRUCTION GUIDANCE

1. SEED MIX: THE CONTRACTOR SHALL COORDINATE WITH THE RESIDENT ENGINEER ON WHICH SEED MIX TO USE.
2. SEED MIX: USE AS INDICATED IN THE PLANS AND/OR FOR ALL ESTABLISHED UPLAND (NON WETLAND) AREAS DISTURBED BY THE CONTRACTOR.
3. ALL SEED MIXTURES: SHALL NOT HAVE A WEED CONTENT EXCEEDING 0.40% BY WEIGHT AND SHALL BE FREE OF ALL NOXIOUS SEED.
4. FERTILIZER AND LIMESTONE: SHALL FOLLOW RATES SHOWN ON PLAN OR AS DIRECTED BY THE ENGINEER.
5. HAY MULCH: TO BE PLACED ON EARTH SLOPES AT THE RATE OF 2 TONS/ACRE, ACHIEVE 90% GROUND COVER OR AS DIRECTED BY THE ENGINEER.
6. HYDROSEEDING: ALTHOUGH GUIDANCE IS GIVEN ABOVE THE SITE CONDITIONS AND THE TYPE OF HYDROSEED PROPOSED FOR USE WILL ULTIMATELY DICTATE THE AMOUNTS AND TYPES OF SOIL AMENDMENTS TO BE APPLIED.
7. TURF ESTABLISHMENT: PLACING SEED, FERTILIZER, LIME AND MULCH PRIOR TO SEPTEMBER 15 AND AFTER APRIL 15 CAN BETTER ENSURE A VIGOROUS GROWTH OF GRASS.

ADAPTED FROM VTRANS TECHNICAL LANDSCAPE MANUAL FOR ROADWAYS AND TRANSPORTATION FACILITIES

TURF ESTABLISHMENT

THIS WORK SHALL BE PERFORMED IN ACCORDANCE WITH SECTION 651FOR SEED (PAY ITEM 651.15)

REVISIONS	
JANUARY 12, 2015	WHF

SYMBOL

NOT TO SCALE

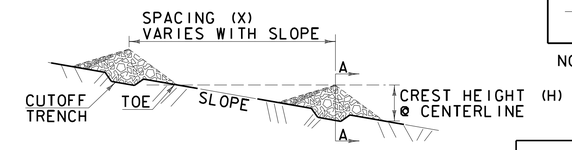

PROFILE

$$X = \frac{H\,(ft)}{SLOPE\,(ft/ft)}$$

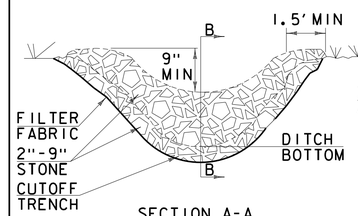

SECTION A-A

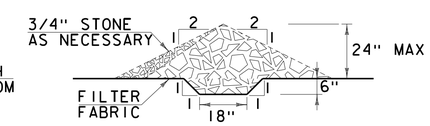

SECTION B-B

CONSTRUCTION SPECIFICATIONS

1. STONE WILL BE PLACED ON A FILTER FABRIC FOUNDATION.
2. CHECK DAMS SHALL BE SPACED SO THAT THE ELEVATION OF THE CREST OFTHE DOWNSTREAM DAM IS AT THE SAME ELEVATION AS THE TOE OF THE UPSTREAM DAM.
3. 3/4" FILTERING STONE MAY BE ADDED TO THE FACE OF THE CHECK DAM AS NECESSARY.
4. EXTEND THE STONE A MINIMUM OF 1.5' BEYOND THE DITCH BANKS TO PREVENT CUTTING AROUND THE DAM.
5. PROTECT CHANNEL DOWNSTREAM OF THE LOWEST CHECK DAM FROM SCOUR AND EROSION WITH STONE OR LINER AS APPROPRIATE.
6. ENSURE THAT CHANNEL APPURTENANCES SUCH AS CULVERT ENTRANCES BELOW CHECK DAMS ARE NOT SUBJECT TO DAMAGE OR BLOCKAGE FROM DISPLACED STONE.
7. MAXIMUM DRAINAGE AREA 2 ACRES.

ADAPTED FROM DETAILS PROVIDED BY: NEW YORK STATE DEC
ORIGINALLY DEVELOPED BY USDA-NRCS
VERMONT DEPARTMENT OF ENVIRONMENTAL CONSERVATION

CHECK DAM

NOTES:
REFER TO "THE VERMONT STANDARDS & SPECIFICATIONS FOR EROSION PREVENTION & SEDIMENT CONTROL -2006- "FROM THE VT AGENCY OF NATURAL RESOURCES FOR ADDITIONAL GUIDANCE.

THIS WORK SHALL BE PERFORMED IN ACCORDANCE WITH SECTION 653 FOR TEMPORARY STONE CHECK DAM, TYPE I(PAY ITEM 653.25)

REVISIONS	
MARCH 21, 2008	WHF
JANUARY 8, 2009	WHF

PROGRESS PLANS

PROJECT NAME: NORTH HERO GRAND ISLE BRIDGE
PROJECT NUMBER: BHF 028-1(26)

FILE NAME: z12b142erodet.dgn
PROJECT LEADER: D. GOZALKOWSKI
DESIGNED BY: J. PARRELLI
EPSC DETAIL SHEET 1

PLOT DATE: 4/29/2016
DRAWN BY: A. KIRBY
CHECKED BY: J. SHIELDS
SHEET 193 OF 196

CHA

FILE NAME = V:\Projects\ANY\K3\28173\CADD_MSTN\12b142\Consultants\z12b142erodet.dgn
DATE/TIME = 4/29/2016
USER = 5237

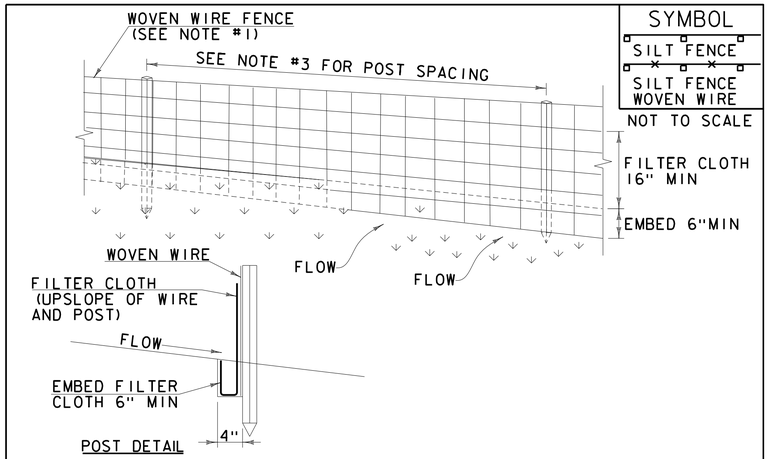

CONSTRUCTION SPECIFICATIONS

1. WOVEN WIRE REINFORCED FENCE IS REQUIRED WITHIN 100' UPSLOPE OF RECEIVING WATERS WHEN THE PROJECT FALLS UNDER A CONSTRUCTION STORMWATER PERMIT. WOVEN WIRE SHALL BE A MIN. 14 GAUGE WITH A 6" MAX. MESH OPENING.
2. FILTER CLOTH SHALL BE EITHER FILTER X, MIRAFI100X, STABILINKA T140N OR APPROVED EQUIVALENT.
3. POST SPACING FOR WIRE-BACKED FENCE SHALL BE 10' MAXIMUM. FOR FILTER-CLOTH FENCE, WHEN ELONGATION IS >50%, POST SPACING SHALL NOT EXCEED 4' AND WHEN ELONGATION IS <50%, POST SPACING SHALL NOT EXCEED 6'.
4. WOVEN WIRE FENCE IS TO BE FASTENED SECURELY TO FENCE POSTS WITH WIRE TIES. FILTER CLOTH IS TO BE FASTENED SECURELY TO WOVEN WIRE FENCE WITH TIES SPACED EVERY 24" AT TOP AND MID SECTION.
5. WHEN TWO SECTIONS OF FILTER CLOTH ADJOIN EACH OTHER THEY SHALL BE OVER-LAPPED BY 6" AND FOLDED.
6. MAINTENANCE SHALL BE PERFORMED AS NEEDED AND MATERIAL REMOVED WHEN SEDIMENT REACHES HALF OF FABRIC HEIGHT.

ADAPTED FROM DETAILS PROVIDED BY: NEW YORK STATE DEC
ORIGINALLY DEVELOPED BY USDA-NRCS
VERMONT DEPARTMENT OF ENVIRONMENTAL CONSERVATION

SILT FENCE

NOTES:
REFER TO "THE VERMONT STANDARDS & SPECIFICATIONS FOR EROSION PREVENTION & SEDIMENT CONTROL -2006- "FROM THE VT AGENCY OF NATURAL RESOURCES FOR ADDITIONAL GUIDANCE.

THIS WORK SHALL BE PERFORMED IN ACCORDANCE WITH SECTION 649 AND AS SHOWN IN THE PLANS FOR GEOTEXTILE FOR SILT FENCE (PAY ITEM 649.51) OR GEOTEXTILE FOR SILT FENCE, WOVEN WIRE REINFORCED (PAY ITEM 649.515).

REVISIONS	
MARCH 21, 2008	WHF
DECEMBER 11, 2008	WHF
JANUARY 13, 2009	WHF

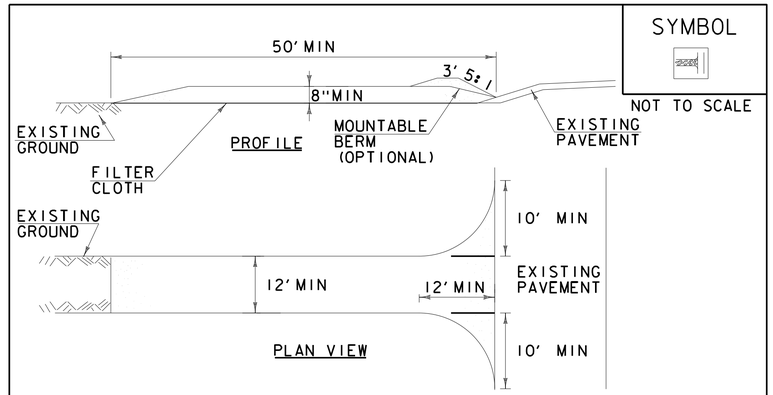

CONSTRUCTION SPECIFICATIONS

1. STONE SIZE- USE 1-4" STONE, RECLAIMED OR RECYCLED CONCRETE EQUIVALENT.
2. LENGTH- NOT LESS THAN 50' (EXCEPT ON A SINGLE RESIDENCE LOT WHERE A 30' MINIMUM LENGTH APPLIES).
3. THICKNESS- NOT LESS THAN 8".
4. WIDTH- 12' MINIMUM, BUT NOT LESS THAN THE FULL WIDTH AT POINTS WHERE INGRESS OR EGRESS OCCURS. 24' IF SINGLE ENTRANCE TO SITE.
5. GEOTEXTILE MUST BE PLACED OVER THE ENTIRE AREA PRIOR TO PLACING STONE.
6. SURFACE WATER- ALL SURFACE WATER FLOWING OR DIVERTED TOWARD CONSTRUCTION ENTRANCES SHALL BE PIPED BENEATH THE ENTRANCE. IF PIPING IS IMPRACTICAL, A MOUNTABLE BERM WITH 5:1 SLOPES WILL BE PERMITTED.
7. MAINTENANCE- THE ENTRANCE SHALL BE MAINTAINED IN A CONDITION WHICH WILL PREVENT TRACKING OR FLOWING OF SEDIMENT ONTO PUBLIC RIGHTS-OF-WAY, ALL SEDIMENT SPILLED, DROPPED, WASHED OR TRACKED ONTO PUBLIC RIGHTS-OF-WAY MUST BE REMOVED IMMEDIATELY.
8. WHEN WASHING IS REQUIRED, IT SHALL BE DONE ON AN AREA STABILIZED WITH STONE AND WHICH DRAINS INTO AN APPROVED SEDIMENT TRAPPING DEVICE.
9. PERIODIC INSPECTION AND NEEDED MAINTENANCE SHALL BE PROVIDED ACCORDING TO PERMIT REQUIREMENTS.

ADAPTED FROM DETAILS PROVIDED BY: NEW YORK STATE DEC
ORIGINALLY DEVELOPED BY USDA-NRCS
VERMONT DEPARTMENT OF ENVIRONMENTAL CONSERVATION

STABILIZED CONSTRUCTION ENTRANCE

NOTES:
REFER TO "THE VERMONT STANDARDS & SPECIFICATIONS FOR EROSION PREVENTION & SEDIMENT CONTROL -2006- "FROM THE VT AGENCY OF NATURAL RESOURCES FOR ADDITIONAL GUIDANCE.

THIS WORK SHALL BE PERFORMED IN ACCORDANCE WITH SECTION 653 FOR VEHICLE TRACKING PAD (PAY ITEM 653.35) OR AS SPECIFIED IN THE CONTRACT.

REVISIONS	
MARCH 24, 2008	WHF
JANUARY 13, 2009	WHF

PROGRESS PLANS

PROJECT NAME: NORTH HERO GRAND ISLE BRIDGE
PROJECT NUMBER: BHF 028-1(26)

CHA

FILE NAME: zl2bl42erodet.dgn
PROJECT LEADER: D. GOZALKOWSKI
DESIGNED BY: J. PARRELLI
EPSC DETAIL SHEET 2

PLOT DATE: 4/29/2016
DRAWN BY: A. KIRBY
CHECKED BY: J. SHIELDS
SHEET 194 OF 196

FILE NAME = V:\Projects\ANY\K3\28173\CADD_MSTN\2bl42\Consultants\zl2bl42erodet.dgn
DATE/TIME = 4/29/2016
USER = 5237

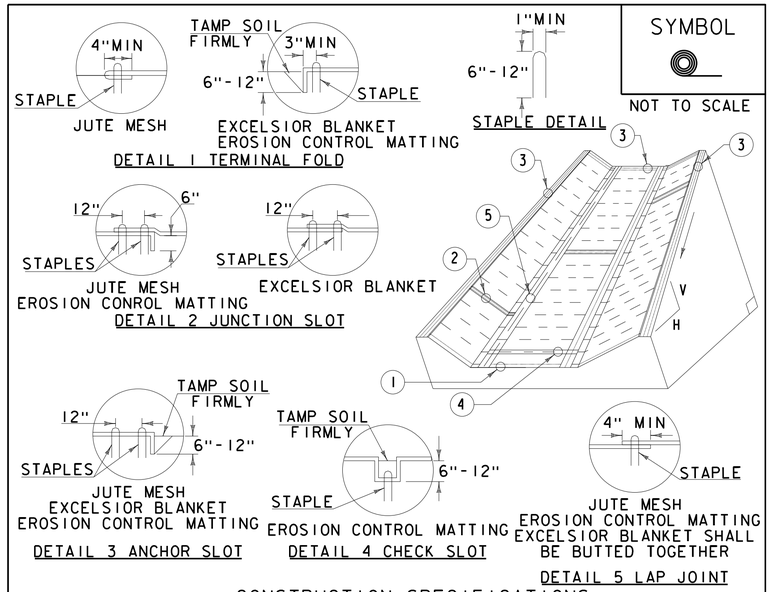

CONSTRUCTION SPECIFICATIONS

1. EROSION MATTING, CHECK SLOTS, SHALL BE SPACED IN DITCH CHANNEL SO THAT ONE OCCURS WITHIN EACH 50' ON SLOPES OF MORE THAN 4% AND LESS THAN 6%. ON SLOPES OF 6% OR MORE, THEY SHALL BE SPACED SO THAT ONE OCCURS WITHIN EACH 25'.
2. APPLY FERTILIZER, LIME SEED PRIOR TO PLACING MATTING.
3. STAPLES ARE TO BE PLACED ALTERNATELY, IN COLUMNS APPROXIMATELY 2' APART AND IN ROWS APPROXIMATELY 3' APART. APPROXIMATELY 175 STAPLES ARE REQUIRED PER 4'X225' ROLL OF MATERIAL AND 125 STAPLES ARE REQUIRED PER 4'X150' ROLL OF MATERIAL.
4. DISTURBED AREAS SHALL BE SMOOTHLY GRADED. EROSION CONTROL MATERIAL SHALL BE PLACED LOOSELY OVER GROUND SURFACE. DO NOT STRETCH.
5. ALL TERMINAL ENDS AND TRANSVERSE LAPS SHALL BE STAPLED AT APPROXIMATELY 12" INTERVALS.

ADAPTED FROM DETAILS PROVIDED BY: NEW YORK STATE DEC
ORIGINALLY DEVELOPED BY USDA-NRCS
VERMONT DEPARTMENT OF ENVIRONMENTAL CONSERVATION

ROLLED EROSION CONTROL PRODUCT (RECP) DITCH

NOTES:
REFER TO "THE VERMONT STANDARDS & SPECIFICATIONS FOR EROSION PREVENTION & SEDIMENT CONTROL -2006- "FROM THE VT AGENCY OF NATURAL RESOURCES FOR ADDITIONAL GUIDANCE.
THIS WORK SHALL BE PERFORMED IN ACCORDANCE WITH SECTION 653 AND AS SHOWN IN THE PLANS FOR TEMPORARY EROSION MATTING (PAY ITEM 653.20) OR PERMANENT EROSION MATTING (PAY ITEM 653.21).

REVISIONS	
MARCH 8, 2007	JMF
APRIL 16, 2007	WHF
JANUARY 13, 2009	WHF

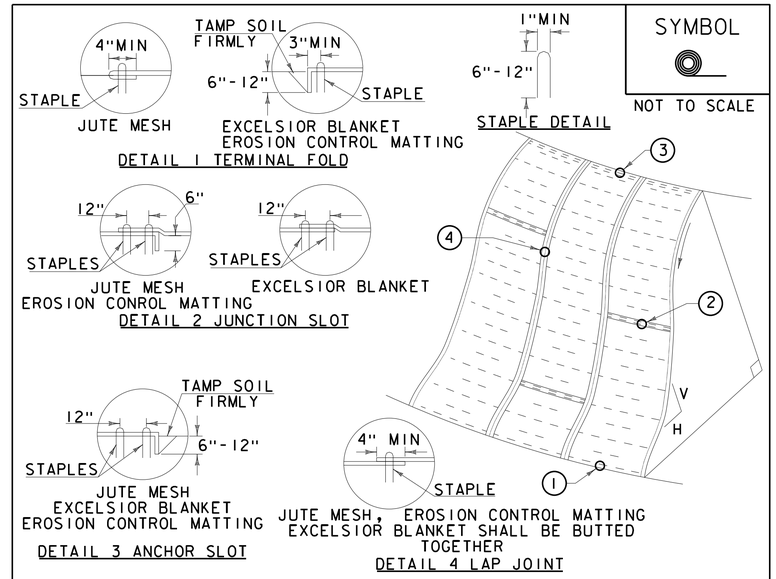

CONSTRUCTION SPECIFICATIONS

1. APPLY TO SLOPES GREATER THAN 3H:1V OR WHERE NECESSARY TO AID IN ESTABLISHING VEGETATION.
2. APPLY FERTILIZER, LIME SEED PRIOR TO PLACING MATTING.
3. STAPLES ARE TO BE PLACED ALTERNATELY, IN COLUMNS APPROXIMATELY 2' APART AND IN ROWS APPROXIMATELY 3' APART. APPROXIMATELY 175 STAPLES ARE REQUIRED PER 4'X225' ROLL OF MATERIAL AND 125 STAPLES ARE REQUIRED PER 4'X150' ROLL OF MATERIAL.
4. DISTURBED AREAS SHALL BE SMOOTHLY GRADED. EROSION CONTROL MATERIAL SHALL BE PLACED LOOSELY OVER GROUND SURFACE. DO NOT STRETCH.
5. ALL TERMINAL ENDS AND TRANSVERSE LAPS SHALL BE STAPLED AT APPROXIMATELY 12" INTERVALS.

ADAPTED FROM DETAILS PROVIDED BY: NEW YORK STATE DEC
ORIGINALLY DEVELOPED BY USDA-NRCS
VERMONT DEPARTMENT OF ENVIRONMENTAL CONSERVATION

ROLLED EROSION CONTROL PRODUCT (RECP) SIDE SLOPE

NOTES:
REFER TO "THE VERMONT STANDARDS & SPECIFICATIONS FOR EROSION PREVENTION & SEDIMENT CONTROL -2006- "FROM THE VT AGENCY OF NATURAL RESOURCES FOR ADDITIONAL GUIDANCE.
THIS WORK SHALL BE PERFORMED IN ACCORDANCE WITH SECTION 653 AND AS SHOWN IN THE PLANS FOR TEMPORARY EROSION MATTING (PAY ITEM 653.20) OR PERMANENT EROSION MATTING (PAY ITEM 653.21).

REVISIONS	
APRIL 16, 2007	JMF
JANUARY 13, 2009	WHF

PROGRESS PLANS

PROJECT NAME: NORTH HERO GRAND ISLE BRIDGE
PROJECT NUMBER: BHF 028-1(26)

FILE NAME: z12b142erodet.dgn
PROJECT LEADER: D. GOZALKOWSKI
DESIGNED BY: J. PARRELLI
EPSC DETAIL SHEET 3

PLOT DATE: 4/29/2016
DRAWN BY: A. KIRBY
CHECKED BY: J. SHIELDS
SHEET 195 OF 196

CHA

FILE NAME = V:\Projects\ANY\K3\28173\CADD_MSTN\12b142\Consultants\z12b142erodet.dgn
DATE/TIME = 4/29/2016
USER = 5237

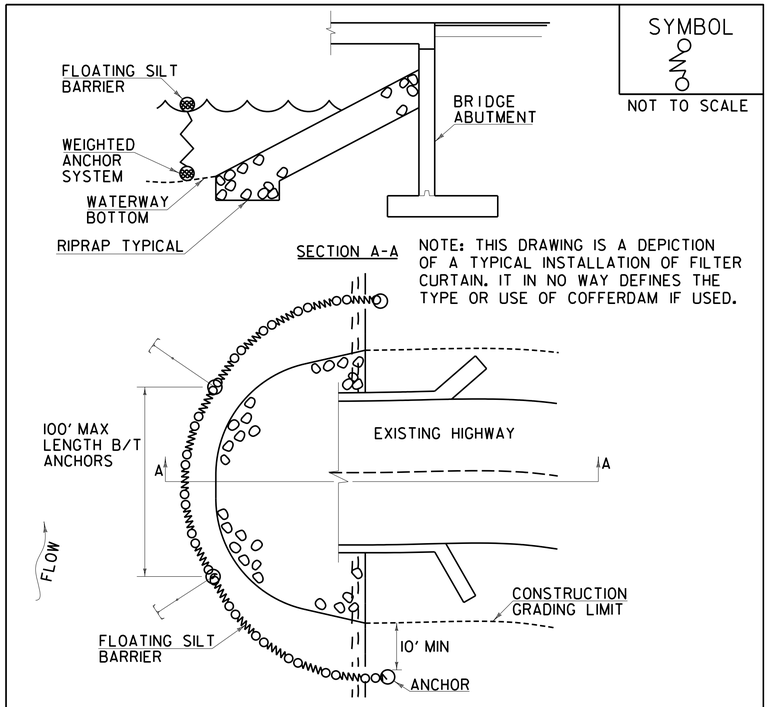

CONSTRUCTION SPECIFICATIONS

1. FILTER CURTAIN SHALL NOT BE PLACED ACROSS A FLOWING WATERWAY, OR IN A WATERWAY WITH STREAM VELOCITIES GREATER THAN 1.5 FEET/SECOND.
2. MAXIMUM 100' LENGTH BETWEEN ANCHORS.
3. LAST SECTION SHALL TERMINATE A MINIMUM OF 10' BEYOND LIMIT OF DISTURBANCE.
4. THE WEIGHTED ANCHOR SYSTEM SHALL BE A TYPE WHICH ALLOWS THE CURTAIN TO CONFORM TO THE BOTTOM OF THE WATERWAY.
5. THE CURTAIN SHALL BE REMOVED BY SLOWLY PULLING TOWARD THE SHORE MINIMIZING THE ESCAPE OF SEDIMENTS INTO WATERWAY.

FILTER CURTAIN

THIS WORK SHALL BE PERFORMED IN ACCORDANCE WITH SECTION 649 FOR GEOTEXTILE FOR FILTER CURTAIN (PAY ITEM 649.61).

REVISIONS	
APRIL 1, 2008	WHF
JANUARY 13, 2009	WHF
SEPTEMBER 4, 2009	WHF

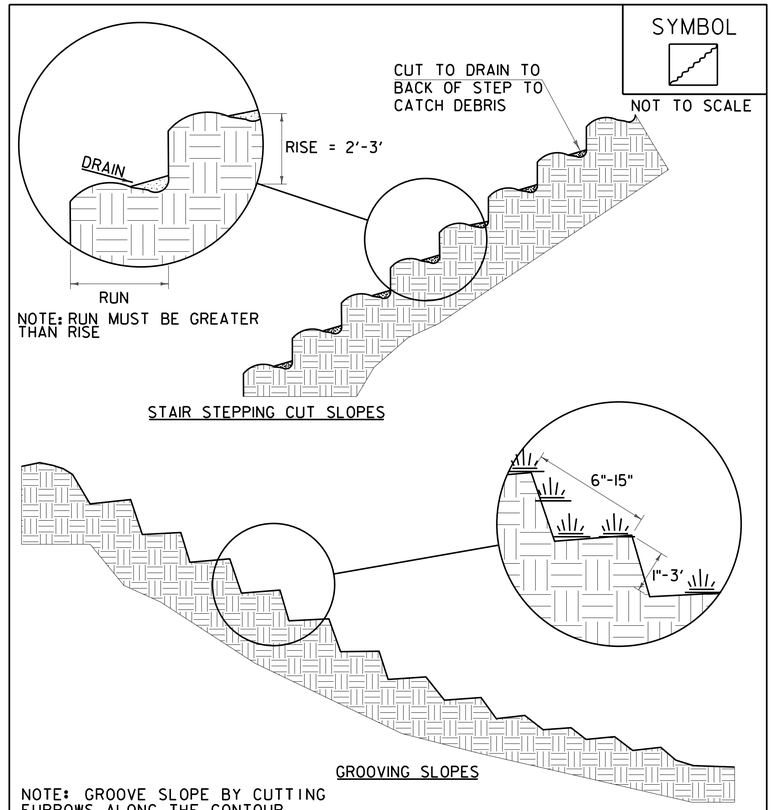

NOTE: GROOVE SLOPE BY CUTTING FURROWS ALONG THE CONTOUR. IRREGULARITIES IN THE SOIL SURFACE CATCH RAINWATER AND RETAIN LIME, FERTILIZER AND SEED.

ADAPTED FROM DETAILS PROVIDED BY: NEW YORK STATE DEC
ORIGINALLY DEVELOPED BY USDA-NRCS
VERMONT DEPARTMENT OF ENVIRONMENTAL CONSERVATION

SURFACE ROUGHENING

NOTES:
REFER TO "THE VERMONT STANDARDS & SPECIFICATIONS FOR EROSION PREVENTION & SEDIMENT CONTROL -2006- " FROM THE VT AGENCY OF NATURAL RESOURCES FOR ADDITIONAL GUIDANCE.

THIS WORK SHALL BE CONSIDERED INCIDENTAL TO THE CONTRACT

REVISIONS	
APRIL 1, 2008	WHF
JANUARY 13, 2009	WHF

PROGRESS PLANS

PROJECT NAME: NORTH HERO GRAND ISLE BRIDGE
PROJECT NUMBER: BHF 028-1(26)

FILE NAME: zl2bl42erodet.dgn
PROJECT LEADER: D. GOZALKOWSKI
DESIGNED BY: J. PARRELLI
EPSC DETAIL SHEET 4

PLOT DATE: 4/29/2016
DRAWN BY: A. KIRBY
CHECKED BY: J. SHIELDS
SHEET 196 OF 196

CHA

FILE NAME = V:\Projects\ANY\K3\28173\CADD_MSTN\12bl42\Consultants\zl2bl42erodet.dgn
DATE/TIME = 4/29/2016
USER = 5237