STATE OF VERMONT
AGENCY OF TRANSPORTATION

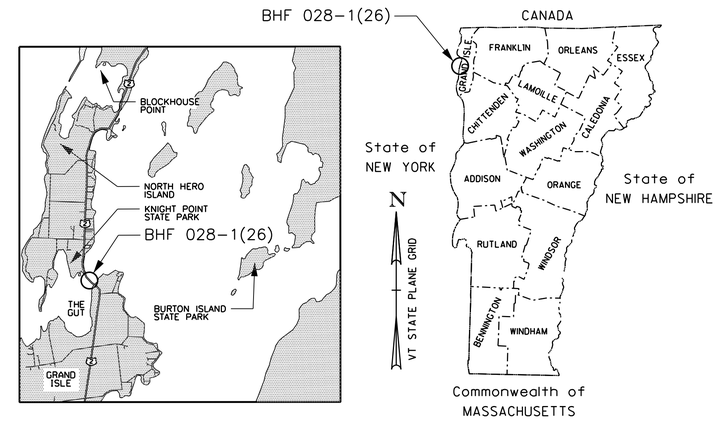

PROPOSED IMPROVEMENT
BRIDGE PROJECT

TOWN OF NORTH HERO - GRAND ISLE

COUNTY OF GRAND ISLE

ROUTE NO : US ROUTE 2 BRIDGE NO : 8

PROJECT LOCATION : BEGINS AT A POINT IN NORTH HERO 0.064 MI WEST OF THE NORTH HERO/GRANDE ISLE TOWN LINE (STA. 518+40.10) AND CONTINUES EASTERLY ON US 2 IN GRANDE ISLE FOR 0.125 MI.

PROJECT DESCRIPTION : REPLACEMENT OF EXISTING LIFT BRIDGE, AND ASSOCIATED ROADWAY IMPROVEMENTS

LENGTH OF STRUCTURE : 259 FEET.
LENGTH OF ROADWAY : 741 FEET.
LENGTH OF PROJECT : 1000 FEET.

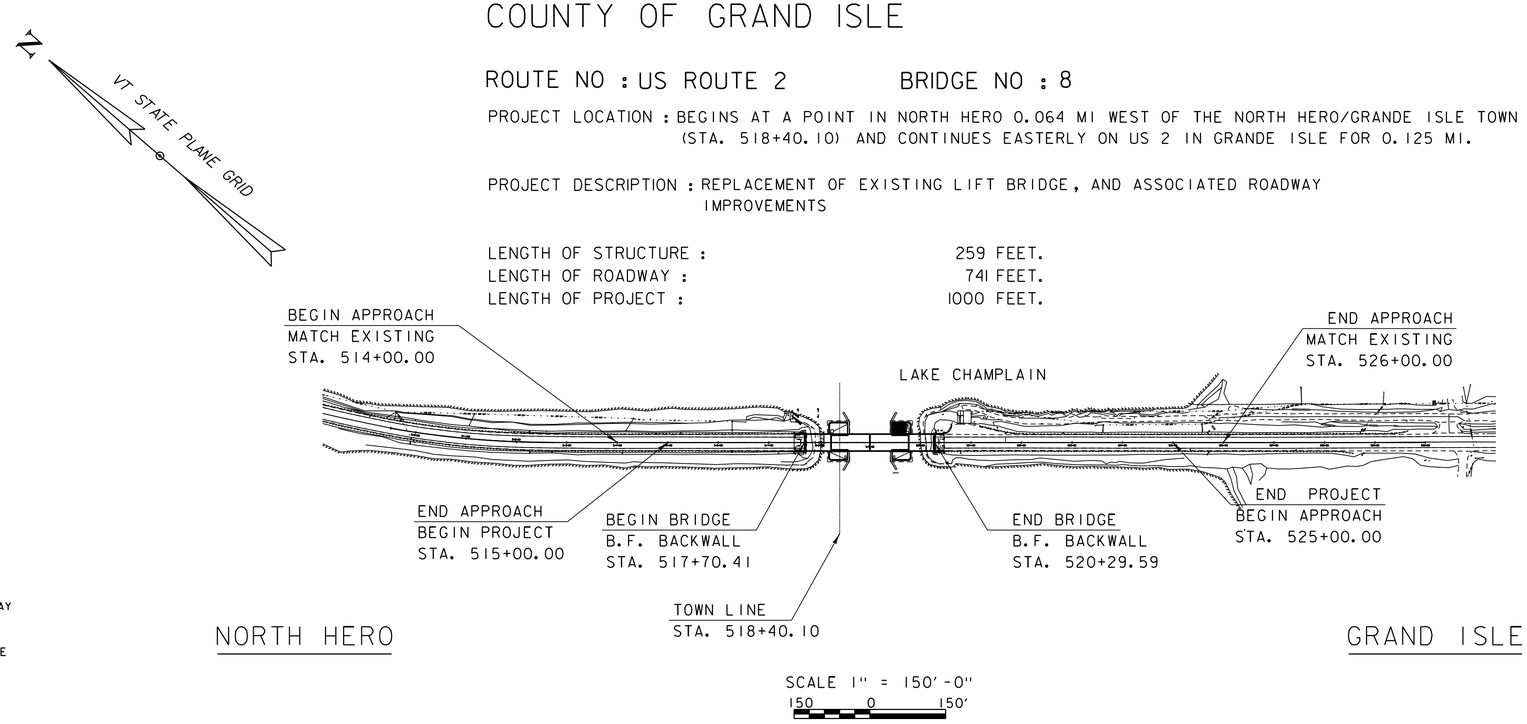

SCALE 1" = 150'-0"
150 0 150'

THESE PLANS ARE SUBJECT TO SUCH ENGINEERING CHANGES AS MAY BE REQUIRED BY THE FEDERAL HIGHWAY ADMINISTRATION OR THE DIRECTOR OF PROGRAM DEVELOPMENT.

CONSTRUCTION IS TO BE CARRIED ON IN ACCORDANCE WITH THESE PLANS AND THE STANDARD SPECIFICATIONS FOR CONSTRUCTION DATED 2011, AS APPROVED BY THE FEDERAL HIGHWAY ADMINISTRATION ON JULY 20, 2011 FOR USE ON THIS PROJECT, INCLUDING ALL SUBSEQUENT REVISIONS AND SUCH REVISED SPECIFICATIONS AND SPECIAL PROVISIONS AS ARE INCORPORATED IN THESE PLANS.

QUALITY ASSURANCE PROGRAM : LEVEL 1

SURVEYED BY : VT SURVEY AND ENG., INC.
SURVEYED DATE : JUNE 17, 2014

DATUM
VERTICAL
HORIZONTAL

PRELIMINARY PLANS

DEPARTMENT OF TRANSPORTATION
FEDERAL HIGHWAY ADMINISTRATOR
APPROVED _____ DATE _____

DIRECTOR OF PROGRAM DEVELOPMENT
APPROVED _____ DATE _____

PROJECT MANAGER : T. SUMNER

PROJECT NAME : NORTH HERO GRAND ISLE BRIDGE
PROJECT NUMBER : BHF 028-1(26)

SHEET 1 OF 172 SHEETS

REV1 DATE: 10/7/2016

STATE OF VERMONT
AGENCY OF TRANSPORTATION

PRELIMINARY INFORMATION SHEET (BRIDGE)

Version
LRFD

INDEX OF SHEETS

PLAN SHEETS

1	TITLE SHEET
2	PRELIMINARY INFORMATION SHEET
3 - 6	QUANTITY SHEETS
7	BRIDGE TYPICAL SECTIONS
8	TEMPORARY BRIDGE TYPICAL SECTIONS
9	ROADWAY TYPICAL SECTIONS
10	PROJECT TRAFFIC CONTROL PLAN
11	BORING INFORMATION SHEET
12 - 21	BORING LOG SHEETS
22 - 26	ROADWAY LAYOUT PLAN SHEETS
27 - 29	PROFILE SHEETS
30	MATERIAL TRANSITION DETAIL SHEET
31 - 37	ROADWAY CROSS SECTIONS
38	BRIDGE PLAN AND ELEVATION
39 - 40	ABUTMENT PLAN & ELEVATION SHEETS
41 - 52	PIER PLAN & ELEVATION SHEETS
53	CONTROL HOUSE PLAN VIEWS
54	CONTROL HOUSE CROSS SECTIONS
55	CONTROL HOUSE FRAMING PLAN
56	APPROACH SPAN FRAMING PLAN
57	APPROACH SPAN GIRDER DETAILS
58	APPROACH SPAN JOINT DETAILS
59	BASCULE SPAN FRAMING PLAN
60	BASCULE SPAN TRANSVERSE SECTION
61 - 62	BASCULE SPAN JOINT DETAILS
63 - 65	BASCULE SPAN GIRDER DETAILS
66	FLOOR BEAM AT TOE
67	BASCULE PIER LONGITUDINAL SECTION
68	MAINTENANCE WALKWAY PLAN & ELEV
69	BASCULE SPAN UPPER COUNTERWEIGHT PLAN
70	BASCULE SPAN LOWER COUNTERWEIGHT PLAN
71	BASCULE SPAN COUNTERWEIGHT ELEVATION
72	BRIDGE BALANCE TABLE
73	APPROACH SPAN DECK TYPICAL
74	BASCULE SPAN DECK TYPICAL
75 - 76	TRUNNION SUPPORT DETAILS
77 - 78	BRIDGE RAIL DETAILS
79	MECHANICAL GENERAL NOTES
80	MECHANICAL PLAN AND ELEVATION
81	OPERATING MACHINERY ASSEMBLY
82	CYLINDER AND CONNECTION DETAILS
83	HPU DETAILS
84	HYDRAULIC SCHEMATIC
85	HYDRAULIC SYSTEM LAYOUT
86	TRUNNION ASSEMBLY
87 - 88	TRUNNION DETAILS
89	SPAN LOCK ASSEMBLY
90	SPAN LOCK DETAILS
91	ELECTRICAL GENERAL NOTES
92	ELECTRICAL LEGEND AND ABBREVIATIONS
93	ELECTRICAL PLAN AND ELEVATION
94	ELECTRICAL SITE PLAN
95 - 96	ONE LINE DIAGRAMS
97 - 115	CONTROL SCHEMATICS
116	GENERATOR INTERCONNECTION DIAGRAM
117	LIMIT SWITCH DEVELOPMENT
118	MCC LAYOUT
119	CONTROL DESK DETAILS
120	CONTROL DESK LAYOUT
121	PIER 1 LEVEL 2 LAYOUT
122	PIER 1 LEVEL 3 LAYOUT
123	CONTROL HOUSE LEVEL 1 LAYOUT
124	CONTROL HOUSE LEVEL 2 LAYOUT
125	CONTROL HOUSE LEVEL 3 LAYOUT
126	EXISTING TENDER HOUSE BASEMENT LAYOUT
127	PROPOSED TENDER HOUSE BASEMENT LAYOUT
128 - 129	CONDUIT BLOCK DIAGRAMS
130	ELECTRIC UTILITY DETAILS
131	HVAC CONTROL HOUSE
132 - 133	HVAC PIER 2 PLANS
134	HVAC TENDER HOUSE BASEMENT LAYOUT
135 - 136	HVAC SCHEDULES
137 - 138	PLUMBING PIER 2 PLANS
139 - 143	CHANNEL CROSS SECTIONS
144	EPSC NARRATIVE SHEET
145 - 150	EPSC EXISTING SITE PLANS
151 - 162	EPSC CONSTRUCTION PLANS
163 - 168	EPSC FINAL SITE PLANS
169 - 172	EPSC DETAILS

STANDARDS LIST

D-20	HIGHWAY CROSSING FOR UNDERGROUND UTILITIES	03-03-2003
D-30	UNDERDRAIN CONSTRUCTION DETAILS	08-13-2007
E-121	STANDARD SIGN PLACEMENT - CONVENTIONAL ROAD	08-08-1995
E-163	TUBULAR STEEL SIGN POST	05-20-1999
E-170	TRAFFIC CONTROL SIGNALS PEDESTAL POST MOUNTED	11-04-1999
E-171A	TRAFFIC CONTROL SIGNALS GENERAL NOTES & DETAILS	08-09-1995
E-171B	TRAFFIC CONTROL SIGNALS MISC. DETAILS	08-09-1995
E-171C	TRAFFIC CONTROL SIGNALS CANTILEVER MOUNTING DETAILS	08-09-1995
E-172	VEHICLE DETECTOR LOOP DETAILS	08-09-1995
E-173	PULL BOXES AND JUNCTION BOXES	08-09-1995
E-175	POWER DROP STANCHIONS	06-08-2009
E-191	PAVEMENT MARKING DETAILS	02-01-1999
E-193	PAVEMENT MARKING DETAILS	08-18-1995
G-1	STEEL BEAM GUARDRAIL DETAILS (POST, DELINEATOR, TYPICALS)	02-10-2014
G-1D	STEEL BEAM GUARDRAIL DETAILS (END TERMINAL, ANCHOR, MEDIAN	02-10-2014
S-352D	GUARDRAIL APPROACH SECTION TO CONCRETE COMBINATION BRID	08-22-2012
S-363	THRIE BEAM TO STANDARD STEEL BEAM TRANSITION SECTION	04-23-2012
T-1	TRAFFIC CONTROL GENERAL NOTES	08-06-2012
T-10	CONVENTIONAL ROADS CONSTRUCTION APPROACH SIGNING	08-06-2012
T-24	TRAFFIC CONTROL FOR MAINTENANCE PAVEMENT MARKING OPERA	08-06-2012
T-28	CONSTRUCTION SIGN DETAILS	08-06-2012
T-29	CONSTRUCTION SIGN DETAILS	08-06-2012
T-30	CONSTRUCTION SIGN DETAILS	08-06-2012
T-40	DELINEATORS AND MILEPOSTS	01-02-2013
T-42	BRIDGE NUMBER PLAQUE	04-09-2014
T-44	MILEMARKER DETAILS STATE AND TOWN HIGHWAYS	04-09-2014
T-45	SQUARE TUBE SIGN POST AND ANCHOR	01-02-2013

STRUCTURES DETAIL SHEETS

SD-501.00	CONCRETE DETAILS AND NOTES	5/7/2010
SD-502.00	CONCRETE DETAILS AND NOTES	5/7/2010
SD-601.00	STRUCTURAL STEEL DETAILS AND NOTES	5/7/2010
SD-602.00	STRUCTURAL STEEL PLATE GIRDER DETAILS AND NOTES	5/7/2010

1

AS BUILT "REBAR" DETAIL

LEVEL I	LEVEL II	LEVEL III
TYPE:	TYPE:	TYPE:
GRADE:	GRADE:	GRADE:

TEMPORARY BRIDGE PROFILE ALONG TEMP CL

BOTTOM OF BEAMS ELEV. = 0.00 FT

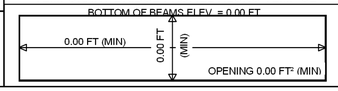

TRAFFIC DATA

YEAR	ADT	DHV	% D	% T	ADTT
2018	3000	460	55	2.6	150
2028	3200	490	55	3.4	210

20 year ESAL for flexible pavement from 2018 to 2038 : 1065000
40 year ESAL for flexible pavement from 2018 to 2058 : 0
Design Speed : 50 mph

FINAL HYDRAULIC REPORT

HYDROLOGIC DATA

Date: July 2016

DRAINAGE AREA : -
CHARACTER OF TERRAIN : -
STREAM CHARACTERISTICS : -
NATURE OF STREAMBED : -

PEAK FLOW DATA - ANNUAL EXCEEDANCE PROBABILITY (AEP)

43% =	-	2% =	-
10% =	-	1% =	-
4% =	-	0.2% =	-

DATE OF FLOOD OF RECORD : May 6, 2011
ESTIMATED DISCHARGE: -
WATER SURFACE ELEV.: 103.27' @ Burlington USGS Gage
NATURAL STREAM VELOCITY : -
ICE CONDITIONS : -
DEBRIS: -
DOES THE STREAM REACH MAXIMUM HIGHWATER ELEV. RAPIDLY? -
IS ORDINARY RISE RAPID? -
IS STAGE AFFECTED BY UPSTREAM OR DOWNSTREAM CONDITIONS? -
IF YES, DESCRIBE: -

WATERSHED STORAGE: 0%
HEADWATERS:
UNIFORM:
IMMEDIATELY ABOVE SITE:

EXISTING STRUCTURE INFORMATION

STRUCTURE TYPE: Draw Bridge
YEAR BUILT:
CLEAR SPAN(NORMAL TO STREAM):
VERTICAL CLEARANCE ABOVE STREAMBED:
WATERWAY OF FULL OPENING:
DISPOSITION OF STRUCTURE:
TYPE OF MATERIAL UNDER SUBSTRUCTURE:

WATER SURFACE ELEVATIONS AT:

43% AEP =	-	VELOCITY =	-
10% AEP =	-	"	-
4% AEP =	-	"	-
2% AEP =	-	"	-
1% AEP =	101.5' **	"	-

LONG TERM STREAMBED CHANGES: -

IS THE ROADWAY OVERTOPPED BELOW 1% AEP:
FREQUENCY:
RELIEF ELEVATION:
DISCHARGE OVER ROAD @ 1% AEP:

UPSTREAM STRUCTURE

TOWN:	-	DISTANCE:	-
HIGHWAY # :	-	STRUCTURE #:	-
CLEAR SPAN:	-	CLEAR HEIGHT:	-
YEAR BUILT:	-	FULL WATERWAY:	-
STRUCTURE TYPE:	-		

DOWNSTREAM STRUCTURE

TOWN:	-	DISTANCE:	-
HIGHWAY # :	-	STRUCTURE #:	-
CLEAR SPAN:	-	CLEAR HEIGHT:	-
YEAR BUILT:	-	FULL WATERWAY:	-
STRUCTURE TYPE:	-		

LRFR LOAD RATING FACTORS

LOADING LEVELS	TRUCK						
	H-20	HL-93	3S2	6 AXLE	3A. STR.	4A. STR.	5A. SEMI
TONNAGE	20	36	36	66	30	34.5	38
INVENTORY							
POSTING							
OPERATING							
COMMENTS:							

PROPOSED STRUCTURE

STRUCTURE TYPE: -

CLEAR SPAN(NORMAL TO STREAM): -
VERTICAL CLEARANCE ABOVE STREAMBED: -
WATERWAY OF FULL OPENING: -

WATER SURFACE ELEVATIONS AT:

43% AEP =	-	VELOCITY=	-
10% AEP =	-	"	-
4% AEP =	-	"	-
2% AEP =	-	"	-
1% AEP =	101.5' **	"	-

IS THE ROADWAY OVERTOPPED BELOW 1% AEP:
FREQUENCY:
RELIEF ELEVATION:
DISCHARGE OVER ROAD @ 1% AEP:

BRIDGE LOW CHORD ELEVATION:
FREEBOARD: @ ?% AEP = ?

SCOUR:

REQUIRED CHANNEL PROTECTION:

PERMIT INFORMATION

AVERAGE DAILY FLOW:	-	DEPTH OR ELEVATION:
ORDINARY LOW WATER:	-	-
ORDINARY HIGH WATER:	-	-

TEMPORARY BRIDGE REQUIREMENTS

STRUCTURE TYPE:
CLEAR SPAN (NORMAL TO STREAM):
VERTICAL CLEARANCE ABOVE STREAMBED:
WATERWAY AREA OF FULL OPENING:

ADDITIONAL INFORMATION

Mean Lake Level at Rouses Point = 94.88' based on "The State Discharge Relationship of Lake Champlain - Richeliea River"

** = Taken from Grand Isle FIS

TRAFFIC MAINTENANCE NOTES

1. MAINTAIN TWO-WAY TRAFFIC ON A TEMPORARY BRIDGE.
2. INSTALL AND MAINTAIN TRAFFIC SIGNALS.
3. SIDEWALKS ARE NOT NECESSARY
4. THE APPROACHES FOR THE TEMPORARY BRIDGE SHALL BE PAVED.

DESIGN VALUES

1. DESIGN LIVE LOAD		HL-93
2. FUTURE PAVEMENT	d_p:	0.0 INCH
3. ABUTMENT BEARING TO BEARING LENGTH (SIX SPANS) (48.00 - 26.50 - 53.10 - 53.10 - 26.50 - 48.00) FT	L:	255.2 FT
4. MIN. MID-SPAN POS. CAMBER @ RELEASE (PRESTRESSED UNITS)	Δ:	- - -
5. PRESTRESSING STRAND	f_y:	- - -
6. PRESTRESSED CONCRETE STRENGTH	f'_c:	- - -
7. PRESTRESSED CONCRETE RELEASE STRENGTH	f'_{ci}:	- - -
8. CONCRETE, HIGH PERFORMANCE CLASS AA	f'_c:	5.0 KSI
9. CONCRETE, HIGH PERFORMANCE CLASS A	f'_c:	4.0 KSI
10. CONCRETE, HIGH PERFORMANCE CLASS B	f'_c:	3.5 KSI
11. CONCRETE, CLASS C	f'_c:	3.0 KSI
12. REINFORCING STEEL	f_y:	60 KSI
13. STRUCTURAL STEEL AASHTO M270	f_y:	50 KSI
14. NOMINAL BEARING RESISTANCE OF ROCK	q_n:	160.0 KSF
15. ROCK BEARING RESISTANCE FACTOR (REFER TO AASHTO LRFD)	ϕ:	0.45
16. MICROPILE GEOTECHNICAL RESISTANCE FACTOR (TIP)	ϕ:	0.50
17. MICROPILE GEOTECHNICAL RESISTANCE FACTOR (SIDE)	ϕ:	0.55
18. MICROPILE STRUCTURAL RES. FACTOR (CASED,COMPRESSION)	ϕ:	0.75
19. LATERAL PILE DEFLECTION	Δ:	TBD
20. BASIC WIND SPEED	V_{3s}:	100 MPH
21. MINIMUM GROUND SNOW LOAD	p_g:	- - -
22. SEISMIC DATA PGA: 0.135g	S_s:	0.259g
	S_1:	0.061g
23.		
24.		- - -
25.		- - -
26.		- - -

PROJECT NAME: **NORTH HERO GRAND ISLE BRIDGE**
PROJECT NUMBER: **BHF 028-1(26)**

FILE NAME:	z12b142pi.xls	PLOT DATE:	10/7/2016
PROJECT LEADER:	T. FRENCH	DRAWN BY:	P. LEFEBVRE
DESIGNED BY:	P.L EFEBVRE	CHECKED BY:	M. MOZER
PRELIMINARY INFORMATION SHEET 1		SHEET 2	OF 172

STATE OF VERMONT
AGENCY OF TRANSPORTATION

QUANTITY SHEET

SUMMARY OF ESTIMATED QUANTITIES																BRIDGE QUANTITY	TOTALS ROUND	TOTALS GRAND TOTAL	TOTALS FINAL	DESCRIPTIONS UNIT	DESCRIPTIONS ITEMS	DESCRIPTIONS ITEM NUMBER	DETAILED SUMMARY OF QUANTITIES QUANTITIES	DETAILED SUMMARY OF QUANTITIES UNIT	DETAILED SUMMARY OF QUANTITIES ITEMS
																				LS	CLEARING AND GRUBBING, INCLUDING INDIVIDUAL TREES AND STUMPS	201.10			
																				CY	COMMON EXCAVATION	203.15			
																				CY	SOLID ROCK EXCAVATION	203.16			
																				CY	UNCLASSIFIED CHANNEL EXCAVATION	203.27			
																				CY	EARTH BORROW	203.30			
																				CY	SAND BORROW	203.31			
																				CY	TRENCH EXCAVATION OF EARTH	204.20			
																				CY	TRENCH EXCAVATION OF EARTH, EXPLORATORY (N.A.B.I.)	204.22			
																				CY	STRUCTURE EXCAVATION	204.25			
																				CY	GRANULAR BACKFILL FOR STRUCTURES	204.30			
																				CY	COFFERDAM EXCAVATION, EARTH	208.30			
																				CY	COFFERDAM EXCAVATION, ROCK	208.35			
																				LS	COFFERDAM (PIER NO. 1)	208.40			
																				LS	COFFERDAM (PIER NO. 2)	208.40			
																				SY	COLD PLANING, BITUMINOUS PAVEMENT	210.10			
																				CY	SUBBASE OF DENSE GRADED CRUSHED STONE	301.35			
																				TON	AGGREGATE SHOULDERS	402.12			
																				CWT	EMULSIFIED ASPHALT	404.65			
																				LU	PRICE ADJUSTMENT, ASPHALT CEMENT (N.A.B.I.)	406.50			
																				TON	SUPERPAVE BITUMINOUS CONCRETE PAVEMENT	490.30			
																				CY	CONCRETE, HIGH PERFORMANCE, CLASS A (APPROACH DECK)	501.33			
																				CY	CONCRETE, HIGH PERFORMANCE, CLASS B (ABUTMENTS/PIERS)	501.34			
																				LS	FURNISHING EQUIPMENT FOR DRIVING PILES (PIPE PILES)	504.10			
																				LB	STRUCTURAL STEEL, ROLLED BEAM	506.50			
																				LB	STRUCTURAL STEEL, PLATE GIRDER	506.55			
																				LB	STRUCTURAL STEEL	506.60			
																				LB	REINFORCING STEEL, LEVEL I	507.11			
																				LB	REINFORCING STEEL, LEVEL II	507.12			
																				LB	REINFORCING STEEL, LEVEL III (DECK)	507.13			
																				LS	SHEAR CONNECTORS	508.15			
																				SY	LONGITUDINAL DECK GROOVING	509.10			
																				GAL	WATER REPELLENT, SILANE	514.10			
																				LS	TWO-WAY TEMPORARY BRIDGE	528.11			
																				EACH	REMOVAL OF STRUCTURE	529.15			
																				EACH	BEARING DEVICE ASSEMBLY, STEEL REINFORCED ELASTOMERIC PAD	531.17			
																				CY	CONCRETE CLASS A (COUNTERWEIGHT)	541.22			
																				CY	CONCRETE CLASS C (TREMIE)	541.30			
																				LF	6 INCH UNDERDRAIN PIPE	605.10			
																				LF	6 INCH UNDERDRAIN CARRIER PIPE	605.20			
																				EA	UNDERDRAIN FLUSHING BASIN	605.95			

PROJECT NAME: **NORTH HERO GRAND ISLE BRIDGE**
PROJECT NUMBER: **BHF 028-1(26)**

FILE NAME: **z12b142qs.xls** PLOT DATE: **10/7/2016**
PROJECT MANAGER: **T. FRENCH** DRAWN BY: **P. LEFEBVRE**
DESIGNED BY: **P. LEFEBVRE** CHECKED BY: **M. MOZER**
QUANTITY SHEET #1 SHEET **3** OF **166**

STATE OF VERMONT
AGENCY OF TRANSPORTATION

QUANTITY SHEET

SUMMARY OF ESTIMATED QUANTITIES																BRIDGE QUANTITY	TOTALS ROUND	TOTALS GRAND TOTAL	TOTALS FINAL	DESCRIPTIONS UNIT	DESCRIPTIONS ITEMS	DESCRIPTIONS ITEM NUMBER
																				HR	POWER BROOM RENTAL, TYPE II	608.31
																				MGAL	DUST CONTROL WITH WATER	609.10
																				CY	STONE FILL TYPE IV	613.13
																				CY	RIPRAP, HEAVY TYPE	613.15
																				LF	CAST-IN-PLACE CONCRETE CURB, TYPE B	616.28
																				LF	STEEL BEAM GUARDRAIL, GALVANIZED	621.20
																				EA	ANCHOR FOR STEEL BEAM RAIL	621.60
																				EA	GUARDRAIL APPROACH SECTION TO CONCRETE BRIDGE RAILING TL-3	621.747
																				LF	REMOVAL AND DISPOSAL OF GUARDRAIL	621.80
																				LF	SLEEVES FOR UTILITIES (ELECTRIC)	625.10
																				LF	PVC SEWER PIPE	628.35
																				LF	PLASTIC WATER PIPE, RIGID	629.33
																				LF	PIPE INSULATION	629.44
																				HR	UNIFORMED TRAFFIC OFFICERS	630.10
																				HR	FLAGGERS	630.15
																				LS	FIELD OFFICE, ENGINEERS	631.10
																				LS	TESTING EQUIPMENT, CONCRETE	631.16
																				LS	TESTING EQUIPMENT, BITUMINOUS	631.17
																				DL	FIELD OFFICE TELEPHONE (N.A.B.I.)	631.26
																				HR	EMPLOYEE TRAINEESHIP	634.10
																				EA	PORTABLE CHANGEABLE MESSAGE SIGN	641.15
																				EA	PORTABLE ARROW BOARD	641.16
																				LF	DURABLE 4 INCH WHITE LINE, POLYUREA	646.404
																				LF	DURABLE 4 INCH YELLOW LINE, POLYUREA	646.414
																				LF	DURABLE 24 INCH STOP BAR, POLYUREA	646.484
																				EA	DURABLE LETTER OR SYMBOL, POLYUREA	646.494
																				LF	TEMPORARY 4 INCH WHITE LINE, PAINT	646.602
																				LF	TEMPORARY 4 INCH YELLOW LINE, PAINT	646.612
																				LF	TEMPORARY 24 INCH STOP BAR, PAINT	646.682
																				EA	TEMPORARY LETTER OR SYMBOL, PAINT	646.692
																				LF	REMOVAL OF EXISTING PAVEMENT MARKINGS	646.85
																				SY	GEOTEXTILE FOR UNDERDRAIN TRENCH LINING	649.41
																				SY	GEOTEXTILE FOR SILT FENCE, WOVEN WIRE REINFORCED	649.515
																				SY	GEOTEXTILE FOR FILTER CURTAIN	649.61
																				LB	SEED	651.15
																				LB	FERTILIZER	651.18
																				TON	AGRICULTURAL LIMESTONE	651.20
																				TON	HAY MULCH	651.25
																				CY	TOPSOIL	651.35
																				LS	EPSC PLAN	652.10
																				HR	MONITORING EPSC PLAN	652.20

DETAILED SUMMARY OF QUANTITIES		
QUANTITIES	UNIT	ITEMS

PROJECT NAME: **NORTH HERO GRAND ISLE BRIDGE**
PROJECT NUMBER: **BHF 028-1(26)**

FILE NAME: **z12b142qs.xls** PLOT DATE: **10/7/2016**
PROJECT MANAGER: **T. FRENCH** DRAWN BY: **P. LEFEBVRE**
DESIGNED BY: **P. LEFEBVRE** CHECKED BY: **M. MOZER**
QUANTITY SHEET #2 SHEET **4** OF **166**

STATE OF VERMONT
AGENCY OF TRANSPORTATION

QUANTITY SHEET

SUMMARY OF ESTIMATED QUANTITIES																BRIDGE QUANTITY	TOTALS ROUND	TOTALS GRAND TOTAL	TOTALS FINAL	DESCRIPTIONS UNIT	DESCRIPTIONS ITEMS	DESCRIPTIONS ITEM NUMBER
																				LU	MAINTENANCE OF EPSC PLAN (N.A.B.I.)	652.30
																				SY	TEMPORARY EROSION MATTING	653.20
																				CY	VEHICLE TRACKING PAD	653.35
																				EA	FILTER BAG	653.45
																				LF	BARRIER FENCE	653.50
																				SF	TRAFFIC SIGNS, TYPE A	675.20
																				LB	TUBULAR STEEL SIGN POST	675.33
																				LF	SQUARE TUBE SIGN POST AND ANCHOR	675.341
																				EA	FOUNDATION FOR TUBULAR STEEL POST	675.43
																				EA	REMOVING SIGNS	675.50
																				EA	DELINEATOR WITH STEEL POST	676.10
																				EA	REMOVAL OF EXISTING DELINEATOR	676.12
																				EA	FLASHING BEACON, GROUND MOUNTED	678.16
																				EA	TRAFFIC CONTROL SYSTEM SIGNALS, INTERSECTION	678.15
																				EA	TEMPORARY TRAFFIC SIGNAL SYSTEM	678.40
																				EA	REMOVAL OF EXISTING TRAFFIC CONTROL SIGNAL SYSTEM	678.45
																				LU	PRICE ADJUSTMENT, FUEL (N.A.B.I.)	690.50
																				EACH	SPECIAL PROVISION (MICROPILE VERIFICATION LOAD TEST)	900.620
																				EACH	SPECIAL PROVISION (CPM SCHEDULE)	900.620
																				LF	SPECIAL PROVISION (MICROPILE - CASED 9" DIAMETER)	900.640
																				LF	SPECIAL PROVISION (MICROPILE - UNCASED 9" DIAMETER)	900.640
																				LF	SPECIAL PROVISION (OBSTRUCTION EXCAVATION - MICROPILES)	900.640
																				LF	SPECIAL PROVISION (BRIDGE RAILING, ALUMINUM)	900.640
																				LS	SPECIAL PROVISION (FURNISHING EQUIPMET FOR MICROPILES)	900.645
																				LS	SPECIAL PROVISION (ARCHITECTURAL FOR CONTROL HOUSE AND BASCULE PIER)	900.645
																				LS	SPECIAL PROVISION (HYDRAULIC POWER UNITS)	900.645
																				LS	SPECIAL PROVISION (HYDRAULIC CYLINDERS)	900.645
																				LS	SPECIAL PROVISION (SPAN LOCKS)	900.645
																				LS	SPECIAL PROVISION (TRUNION ASSEMBLIES)	900.645
																				LS	SPECIAL PROVISION (LIVE LOAD SHOES)	900.645
																				LS	SPECIAL PROVISION (FENDER SYSTEM)	900.645
																				LS	SPECIAL PROVISION (BALANCE BLOCKS)	900.645
																				LS	SPECIAL PROVISION (BRIDGE POWER EQUIPMENT)	900.645
																				LS	SPECIAL PROVISION (BRIDGE CONTROL SYSTEM)	900.645
																				LS	SPECIAL PROVISION (SUBMARINE CABLE SYSTEM)	900.645
																				LS	SPECIAL PROVISION (COMMISSIONING & STARTUP)	900.645
																				LS	SPECIAL PROVISION (AS-BUILT DOCUMENTATION / OPERATION & MAINTENANCE MANUAL	900.645
																				LS	SPECIAL PROVISION (TRAFFIC CONTROL, ALL INCLUSIVE)	900.645
																				LS	SPECIAL PROVISION (HVAC CONTROL HOUSE AND HVAC TENDER HOUSE)	900.645
																				LS	SPECIAL PROVISION (PLUMBING)	900.645

DETAILED SUMMARY OF QUANTITIES		
QUANTITIES	UNIT	ITEMS

PROJECT NAME: **NORTH HERO GRAND ISLE BRIDGE**
PROJECT NUMBER: **BHF 028-1(26)**

FILE NAME: **z12b142qs.xls** PLOT DATE: **10/7/2016**
PROJECT MANAGER: **T. FRENCH** DRAWN BY: **P. LEFEBVRE**
DESIGNED BY: **P. LEFEBVRE** CHECKED BY: **M. MOZER**
QUANTITY SHEET #3 SHEET **5** OF **166**

STATE OF VERMONT
AGENCY OF TRANSPORTATION

QUANTITY SHEET

SUMMARY OF ESTIMATED QUANTITIES																	TOTALS			DESCRIPTIONS				DETAILED SUMMARY OF QUANTITIES		
																BRIDGE QUANTITY	ROUND	GRAND TOTAL	FINAL	UNIT	ITEMS		ITEM NUMBER	QUANTITIES	UNIT	ITEMS
																				LS	SPECIAL PROVISION (RELOCATION OF EXISTING CONTROL HOUSE)		900.645			
																				SF	SPECIAL PROVISION (HALF FILLED GRID DECK)		900.670			
																				LS	MOBILIZATION/DEMOBILIZATION (Assumed 6%)		635.11			

PROJECT NAME: **NORTH HERO GRAND ISLE BRIDGE**
PROJECT NUMBER: **BHF 028-1(26)**

FILE NAME: **z12b142qs.xls** PLOT DATE: **10/7/2016**
PROJECT MANAGER: **T. FRENCH** DRAWN BY: **P. LEFEBVRE**
DESIGNED BY: **P. LEFEBVRE** CHECKED BY: **M. MOZER**
QUANTITY SHEET #4 SHEET **6** OF **166**

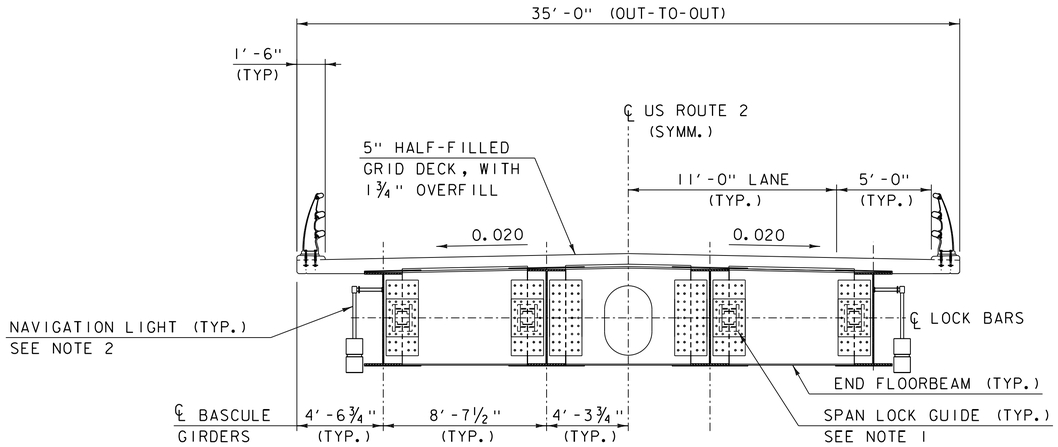

SECTION AT BASCULE SPAN

SCALE ¼" = 1'-0"

4' 0 4'

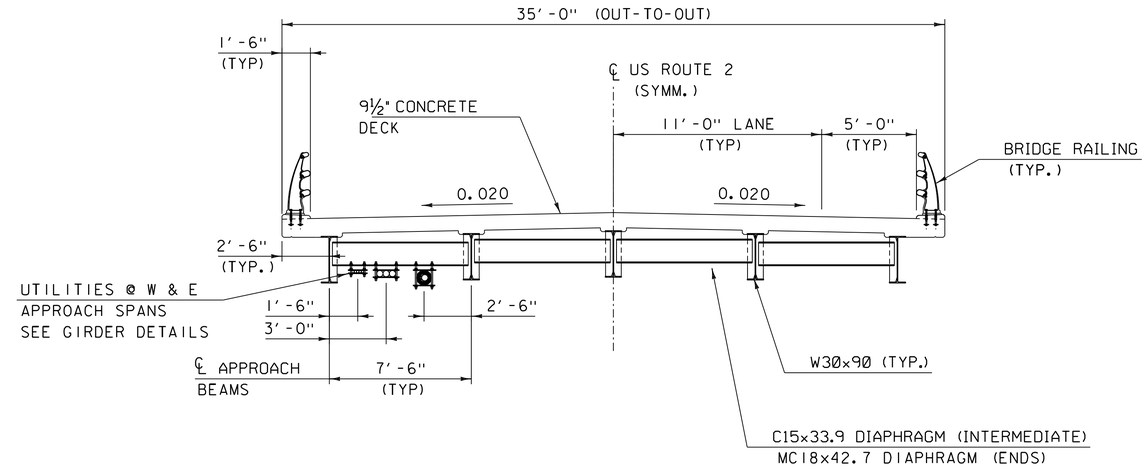

SECTION AT APPROACH SPANS

SCALE ¼" = 1'-0"

4' 0 4'

NOTE:

1. FOR DETAILS OF SPAN LOCKS AND GUIDE SEE SHEET 88.
2. FOR DETAILS OF NAVIGATION LIGHTS SEE SHEET XX.

PRELIMINARY PLANS

PROJECT NAME: NORTH HERO GRAND ISLE BRIDGE	
PROJECT NUMBER: BHF 028-1(26)	
FILE NAME: z12b142deckxs.dgn	PLOT DATE: 10/7/2016
PROJECT LEADER: T. FRENCH	DRAWN BY: P. MONTICCIOLO
DESIGNED BY: H. PROTIN	CHECKED BY: P. DAVIS
BRIDGE TYPICAL SECTIONS	SHEET 7 OF 172

TYPICAL TEMPORARY BRIDGE APPROACH
ROADWAY SECTION
US ROUTE 2

1½" BITUMINOUS CONCRETE PAVEMENT TYPE IV
1½" BITUMINOUS CONCRETE PAVEMENT TYPE IV
3" BITUMINOUS CONCRETE PAVEMENT TYPE II
18" SUBBASE OF DENSE GRADED CRUSHED STONE

MATERIAL TOLERANCES (IF USED ON PROJECT)	
SURFACE	
- PAVEMENT COURSES (TOTAL DEPTH)	+/- ¼"
- AGGREGATE SURFACE COURSE	+/- ½"
SUBBASE	+/- 1"
SAND BORROW	+/- 1"

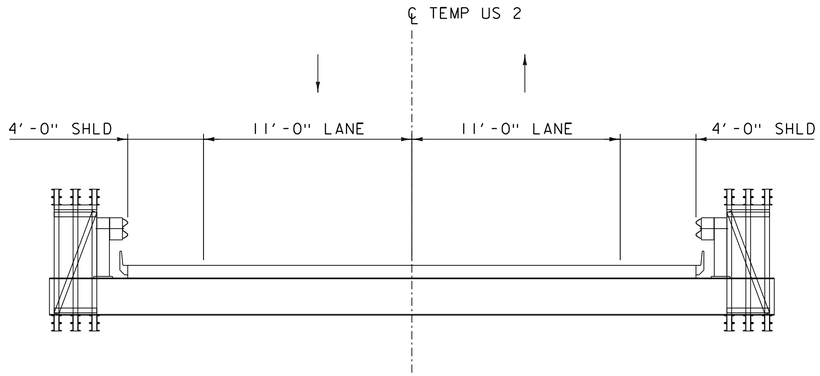

SECTION AT MOVABLE SPAN

SCALE ¼" = 1'-0"
4' 0 4'

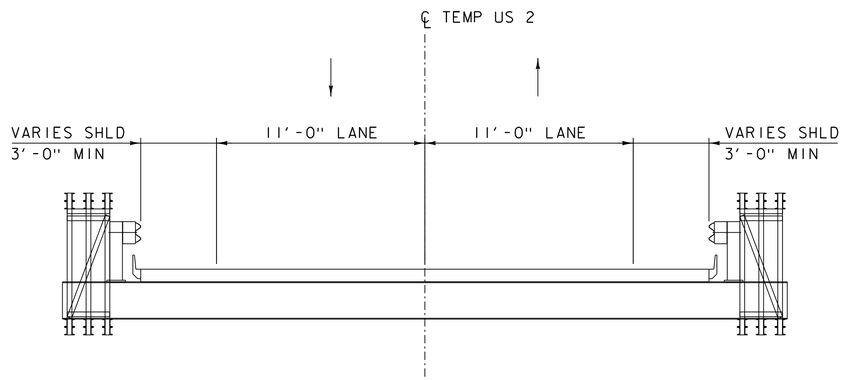

SECTION AT APPROACH SPAN

SCALE ¼" = 1'-0"
4' 0 4'

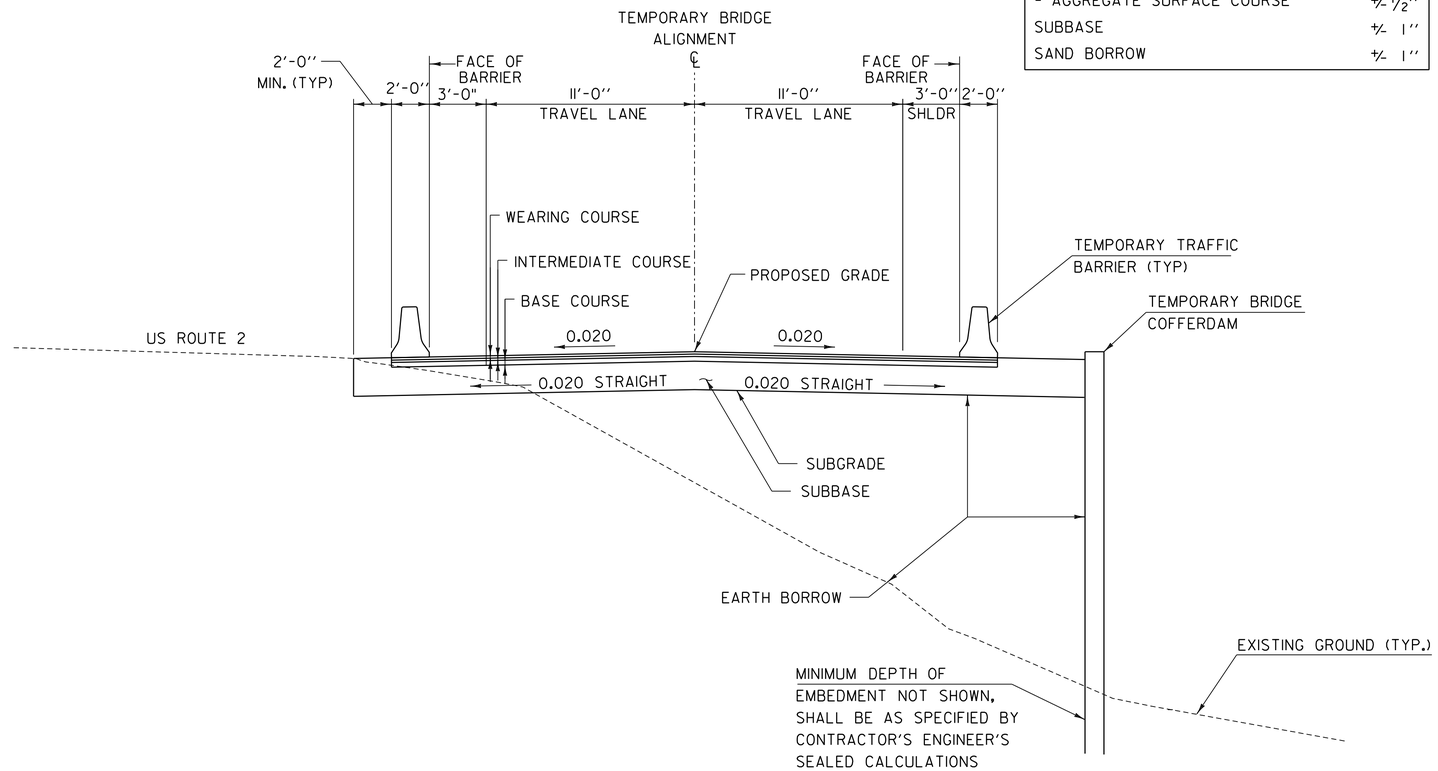

NORMAL SECTION

SCALE: ¼" = 1'-0"

TEMPORARY BRIDGE DESIGN CRITERIA	
DESIGN SPEED	25 MPH
MIN VERTICAL CLEARANCE (LOW CHORD CLOSED TO OHW)	10 FT
MIN MOVABLE SPAN CLEAR SPAN (FENDER TO FENDER)	40 FT
MIN MOVABLE SPAN OPENING SPEED	XX MIN
LIVE LOAD	XX
ICE LOAD	XX
VESSEL COLLISION FORCE	XX
VEHICULAR COLLISION FORCE	NCHRP TL-3

NOTE: TEMPORARY BRIDGE TO MEET THE REQUIREMENTS OF SECTION 528 EXCEPT AS NOTED.

PRELIMINARY PLANS

HDR

PROJECT NAME: NORTH HERO GRAND ISLE BRIDGE	
PROJECT NUMBER: BHF 028-1(26)	
FILE NAME: zi2bl42tempxs.dgn	PLOT DATE: 10/7/2016
PROJECT LEADER: T. FRENCH	DRAWN BY: P. LEFEBVRE
DESIGNED BY: H. PROTIN	CHECKED BY: M. MOZER
TEMPORARY BRIDGE TYPICAL SECTIONS	SHEET 8 OF 172

MATERIAL TOLERANCES (IF USED ON PROJECT)	
SURFACE	
- PAVEMENT COURSES (TOTAL DEPTH)	+/- 1/4"
- AGGREGATE SURFACE COURSE	+/- 1/2"
SUBBASE	+/- 1"
SAND BORROW	+/- 1"

TYPICAL ROADWAY SECTION
US ROUTE 2

1 1/2" SUPERPAVE BITUMINOUS CONCRETE PAVEMENT TYPE IVS
2" SUPERPAVE BITUMINOUS CONCRETE PAVEMENT TYPE IIS
2 1/2" SUPERPAVE BITUMINOUS CONCRETE PAVEMENT TYPE IS
18" SUBBASE OF DENSE GRADED CRUSHED STONE
24" SAND BORROW

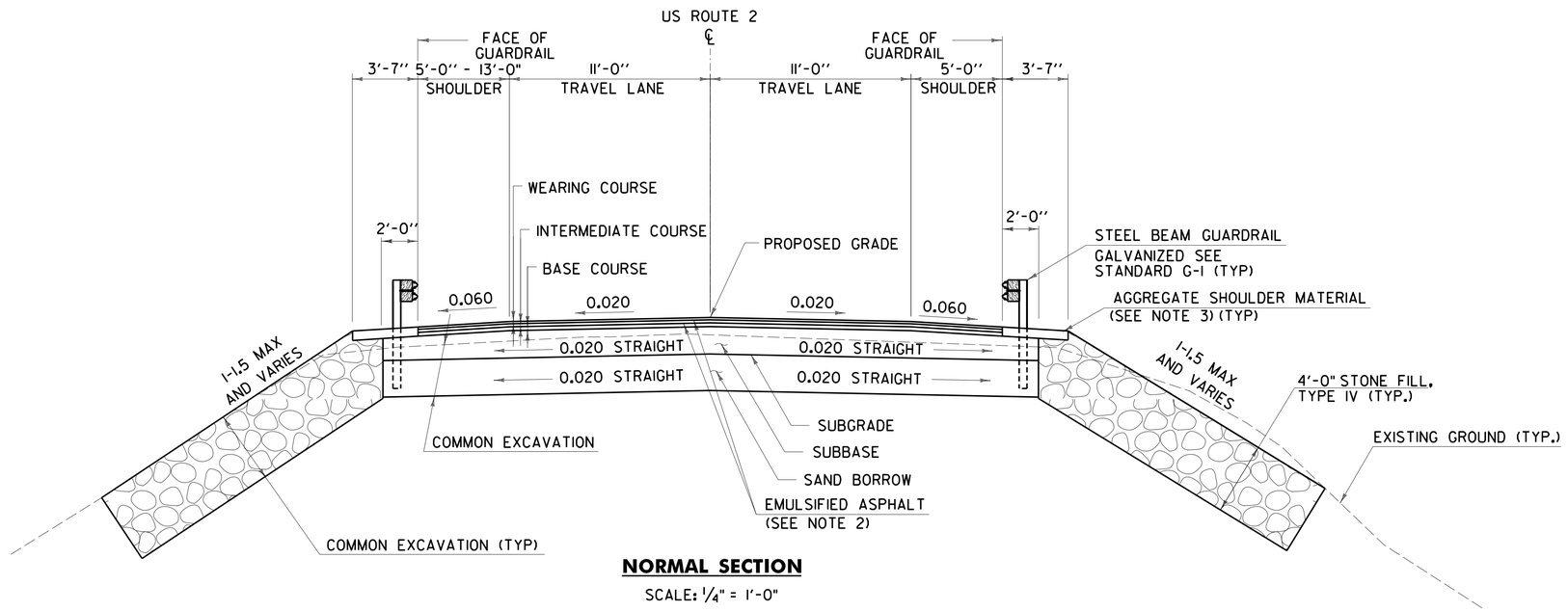

NORMAL SECTION

SCALE: 1/4" = 1'-0"

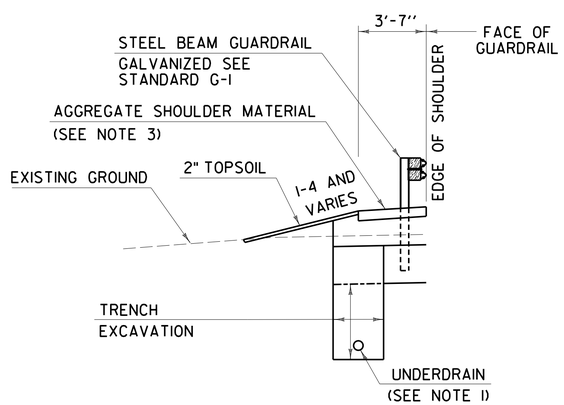

UNDERDRAIN SECTION WITH GUARDRAIL

STA 520+50.00 - STA 521+25.00 LT
SCALE: 1/4" = 1'-0"

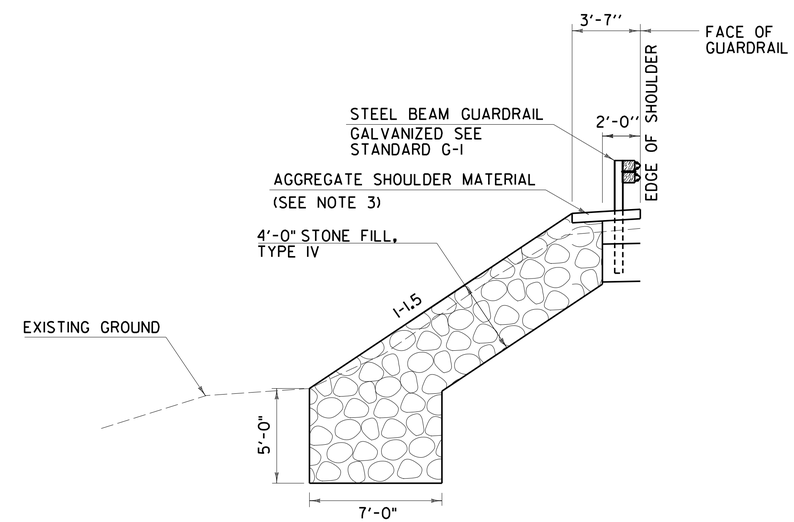

STONE SLOPE WITH STANDARD GUARDRAIL SHELF SECTION

STA 521+25.00 - STA 525+50.00 LT
SCALE: 1/4" = 1'-0"

NOTES:

1. INSTALL 6" UNDERDRAIN AS SHOWN ON THE PLANS OR AS DIRECTED BY THE ENGINEER. SEE STD D-30 FOR CONSTRUCTION DETAILS.
2. TACK COAT APPLICATION RATE SHALL BE 0.025 TO 0.040 GAL/SQ.YD OF CRS-1H OR RS-1H.
3. ALL EDGES OF PAVEMENT SHALL BE BACKED UP TO FULL HEIGHT WITH AGGREGATE SHOULDER MATERIAL AS DIRECTED BY THE ENGINEER.

PROJECT NAME: NORTH HERO GRAND ISLE BRIDGE	
PROJECT NUMBER: BHF 028-1(26)	
FILE NAME: z12b142typ.dgn	PLOT DATE: 10/7/2016
PROJECT LEADER: D. GOZALKOWSKI	DRAWN BY: A. KIRBY
DESIGNED BY: J. PARRELLI	CHECKED BY: J. SHIELDS
ROADWAY TYPICAL SECTION SHEET	SHEET 9 OF 172

CHA

FILE NAME = V:\Projects\ANY\K3\28173\CADD_MSTN\12b142\Consultants\z12b142typ.dgn
DATE/TIME = 10/7/2016
USER = 3724

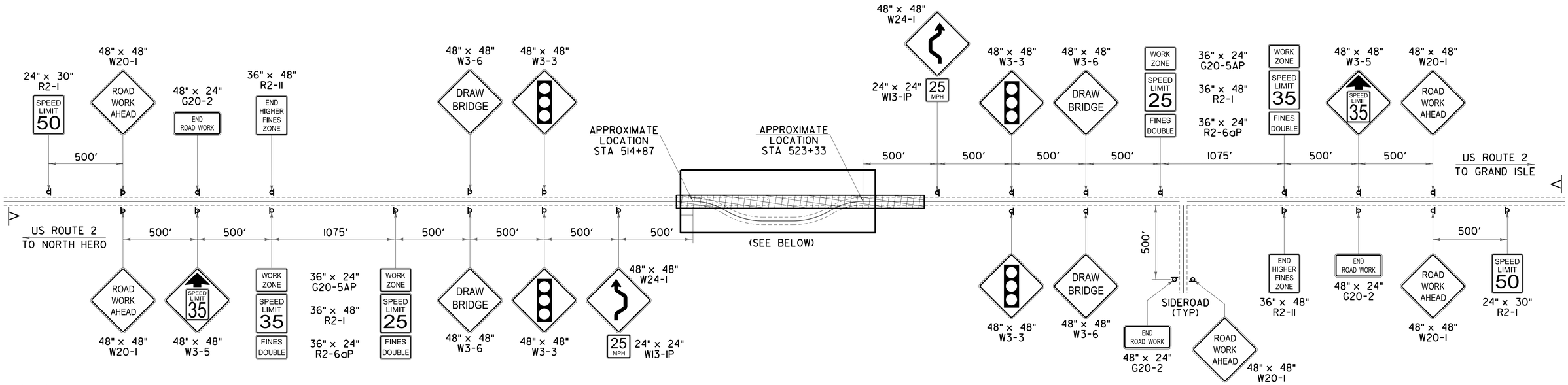

NOTES:

1. ALL DISTANCES SHOWN ARE DESIRABLE MINIMUMS. FIELD CONDITIONS SHALL CONTROL THE ACTUAL PLACEMENT OF CONSTRUCTION SIGNS. SEE VAOT STD. T-10 FOR ADDITIONAL SIGN PLACEMENT DETAILS. PROPOSED CONSTRUCTION SIGNS SHALL NOT INTERFERE WITH THE SIGHT LINES TO EXISTING SIGNS. PROPOSED SIGNS SHALL BE LOCATED A MINIMUM OF 100 FEET FROM THE NEAREST EXISTING OR PROPOSED SIGN. EXACT SIGN LOCATIONS SHALL BE APPROVED BY THE ENGINEER.

2. CONSTRUCTION SIGNING AND ALL TEMPORARY TRAFFIC CONTROL MEASURES SHALL BE IN ACCORDANCE WITH SECTION 6 OF THE LATEST EDITION OF THE MANUAL ON UNIFORM TRAFFIC CONTROL DEVICES (MUTCD).

3. CONSTRUCTION SIGNS SHALL BE IN NEW OR LIKE NEW CONDITION PER VAOT STANDARDS.

4. CONSTRUCTION SIGNS SHALL BE OF THE SIZES SHOWN ON THE PLAN WITH BLACK LEGENDS ON FLUORESCENT ORANGE BACKGROUNDS. LEAD SIGN (W20-1) SHALL BE ASTM D4956 TYPE VIII FLUORESCENT ORANGE SHEET.

5. PAYMENT FOR THE INSTALLATION, MAINTENANCE, AND REMOVAL OF ALL CONSTRUCTION SIGNING WILL BE MADE UNDER ITEM 900.645 SPECIAL PROVISION (TRAFFIC CONTROL, ALL INCLUSIVE).

6. ALL SIGN STANDS AND POST INSTALLATIONS SHALL BE NATIONAL COOPERATIVE HIGHWAY RESEARCH PROGRAM REPORT (NCHRP) 350 COMPLIANT.

7. THE CONTRACTOR SHALL COVER OR REMOVE ANY SIGNS THAT CONTRADICT TEMPORARY TRAFFIC CONTROL SIGNS. ALL SIGNS REMOVED OR COVERED BY THE CONTRACTOR SHALL BE REPLACED OR UNCOVERED BY THE CONTRACTOR WHEN THE TRAFFIC CONTROL PLAN IS DISASSEMBLED. PAYMENT FOR THIS WORK SHALL BE CONSIDERED INCIDENTAL TO ITEM 900.645 SPECIAL PROVISION (TRAFFIC CONTROL, ALL INCLUSIVE). ANY DAMAGE TO EXISTING SIGNS BY THE CONTRACTOR SHALL BE REPLACED BY THE CONTRACTOR WITH NO ADDITIONAL COMPENSATION.

8. TEMPORARY TRAFFIC BARRIER SHALL BE USED FOR THE WORK ZONE AS INDICATED ON THIS TRAFFIC CONTROL PLAN OR AS DIRECTED BY THE ENGINEER. THE END OF THE TEMPORARY TRAFFIC BARRIER SHALL BE TIED INTO THE EXISTING GUARDRAIL AND NEW TEMPORARY BRIDGE RAIL DURING CONSTRUCTION. THE COST OF THE TEMPORARY TRAFFIC BARRIER, AS WELL AS ANY INTERIM REMOVING AND SETTING OF THE TEMPORARY TRAFFIC BARRIER, WILL BE CONSIDERED INCIDENTAL TO ITEM 900.645 SPECIAL PROVISION (TRAFFIC CONTROL, ALL INCLUSIVE).

9. PORTABLE CHANGEABLE MESSAGE SIGN LOCATIONS AND MESSAGES ARE TO BE APPROVED BY THE ENGINEER, TWO ADDITIONAL PORTABLE CHANGEABLE MESSAGE SIGNS HAVE BEEN INCLUDED IN THE QUANTITIES TO BE USED AT THE ENGINEER'S DISCRETION.

10. TEMPORARY WARNING GATES, BARRIER GATES AND TRAFFIC SIGNALS SHALL BE DESIGNED BY THE CONTRACTOR AND CONSIDERED INCIDENTAL TO ITEM 528.11 TWO-WAY TEMPORARY BRIDGE.

11. THE CONTRACTOR SHALL SUBMIT SITE SPECIFIC TRAFFIC CONTROL PLANS FOR ALL PHASES OF WORK TO BE APPROVED BY THE ENGINEER. THIS WORK SHALL BE INCLUDED UNDER ITEM 900.645 SPECIAL PROVISION (TRAFFIC CONTROL, ALL INCLUSIVE). THESE TRAFFIC CONTROL PLANS SHALL BE USED BY THE CONTRACTOR THROUGHOUT THE DURATION OF THE PROJECT.

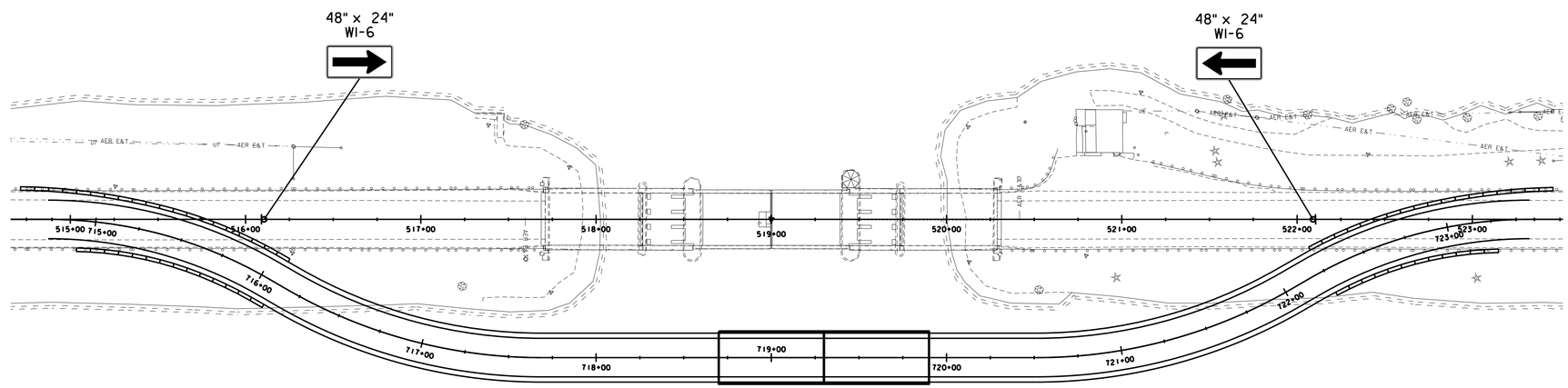

LEGEND

d	PROPOSED CONSTRUCTION SIGN AND POSTS
	PORTABLE CHANGEABLE MESSAGE SIGN
	TEMPORARY TRAFFIC BARRIER
	PROJECT AREA

NOT TO SCALE

CHA

PROJECT NAME: NORTH HERO GRAND ISLE BRIDGE	
PROJECT NUMBER: BHF 028-1(26)	
FILE NAME: z12b142tcbdr.dgn	PLOT DATE: 10/7/2016
PROJECT LEADER: D. GOZALKOWSKI	DRAWN BY: C. ANDERSON
DESIGNED BY: J. PARRELLI	CHECKED BY: J. SHIELDS
PROJECT TRAFFIC CONTROL PLAN	SHEET 10 OF 172

FILE NAME = V:\Projects\ANY\K3\28173\CADD_MSTN\12b142\Consultants\z12b142tcbdr.dgn
DATE/TIME = 10/7/2016
USER = 3724

SOIL CLASSIFICATION

AASHTO

A1	Gravel and Sand
A3	Fine Sand
A2	Silty or Clayey Gravel and Sand
A4	Silty Soil - Low Compressibility
A5	Silty Soil - Highly Compressible
A6	Clayey Soil - Low Compressibility
A7	Clayey Soil - Highly Compressible

ROCK QUALITY DESIGNATION

R.Q.D. (%)	ROCK DESCRIPTION
<25	Very Poor
25 to 50	Poor
51 to 75	Fair
76 to 90	Good
>90	Excellent

SHEAR STRENGTH

UNDRAINED SHEAR STRENGTH IN P.S.F.	CONSISTENCY
<250	Very Soft
250-500	Soft
500-1000	Med. Stiff
1000-2000	Stiff
2000-4000	Very Stiff
>4000	Hard

CORRELATION GUIDE OF "N" TO DENSITY/CONSISTENCY

DENSITY (GRANULAR SOILS) N	DESCRIPTIVE TERM	CONSISTENCY (COHESIVE SOILS) N	DESCRIPTIVE TERM
<5	Very Loose	<2	Very Soft
5-10	Loose	2-4	Soft
11-24	Med. Dense	5-8	Med. Stiff
25-50	Dense	9-15	Stiff
>50	Very Dense	16-30	Very Stiff
		31-60	Hard
		>60	Very Hard

COMMONLY USED SYMBOLS

▼	Water Elevation
⊗	Standard Penetration Boring
⊕	Auger Boring
⊙	Rod Sounding
S	Sample
N	Standard Penetration Test Blow Count Per Foot For: 2" O.D. Sampler 1 3/8" I.D. Sampler Hammer Weight Of 140 Lbs. Hammer Fall Of 30"
VS	Field Vane Shear Test
US	Undisturbed Soil Sample
B	Blast
DC	Diamond Core
MD	Mud Drill
WA	Wash Ahead
HSA	Hollow Stem Auger
AX	Core Size 1 1/8"
BX	Core Size 1 5/8"
NX	Core Size 2 1/8"
M	Double Tube Core Barrel Used
LL	Liquid Limit
PL	Plastic Limit
PI	Plasticity Index
NP	Non Plastic
w	Moisture Content (Dry Wgt. Basis)
D	Dry
M	Moist
MTW	Moist To Wet
W	Wet
Sat	Saturated
Bo	Boulder
Gr	Gravel
Sa	Sand
Si	Silt
Cl	Clay
HP	Hardpan
Le	Ledge
NLTD	No Ledge To Depth
CNPF	Can Not Penetrate Further
TLOB	Top of Ledge Or Boulder
NR	No Recovery
Rec.	Recovery
%Rec.	Percent Recovery
RQD	Rock Quality Designation
CBR	California Bearing Ratio
<	Less Than
>	Greater Than
R	Refusal (N > 100)
VTSPG	NAD83 - See Note 7

COLOR

blk	Black	pnk	Pink
bl	Blue	pu	Purple
brn	Brown	rd	Red
dk	Dark	tn	Tan
gry	Gray	wh	White
gn	Green	yel	Yellow
lt	Light	mltc	Multicolored
or	Orange		

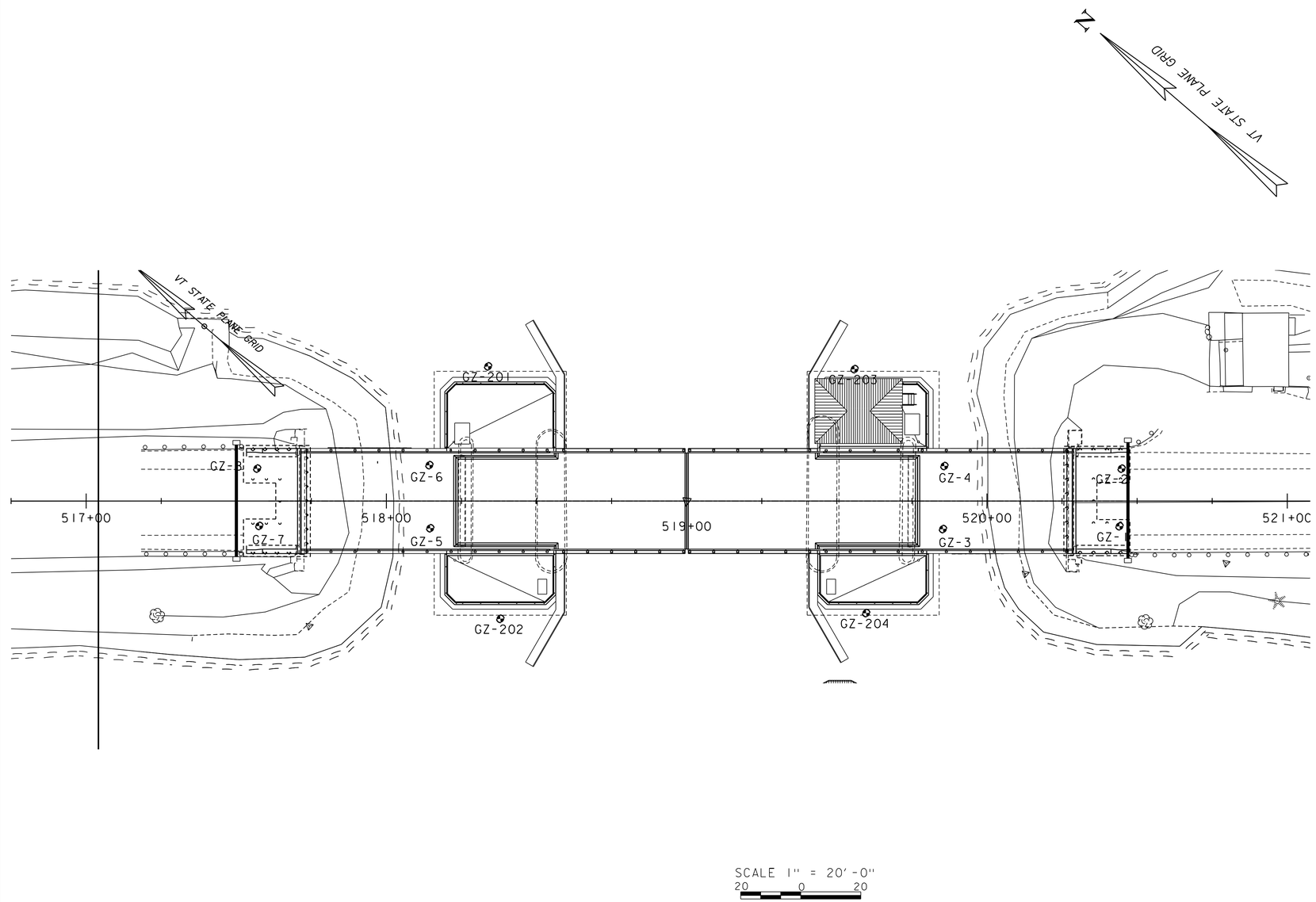

DEFINITIONS (AASHTO)

BEDROCK (LEDGE) - Rock in its native location of indefinite thickness.

BOULDER - A rock fragment with an average dimension > 12 inches.

COBBLE - Rock fragments with an average dimension between 3 and 12 inches.

GRAVEL - Rounded particles of rock < 3" and > 0.0787" (#10 sieve).

SAND - Particles of rock < 0.0787" (#10 sieve) and > 0.0029" (#200 sieve).

SILT - Soil < 0.0029" (#200 sieve), non or slightly plastic and exhibits no strength when air-dried.

CLAY - Fine grained soil, exhibits plasticity when moist and considerable strength when air-dried.

VARVED - Alternate layers of silt and clay.

HARDPAN - Extremely dense soil, cemented layer, not softened when wet.

MUCK - Soft organic soil (containing > 10% organic material.

MOISTURE CONTENT - Weight of water divided by dry weight of soil.

FLOWING SAND - Granular soil so saturated (loose) that it flows into drill casing during extraction of wash rod.

STRIKE - Angle from magnetic north to line of intersection of bed with a horizontal plane.

DIP - Inclination of bed with a horizontal plane.

GENERAL NOTES

1. The subsurface explorations GZ-1 to GZ-8 were made between 07/27/2015 and 08/05/2015 by GZA. GZ-201 to GZ-204 were made on 6/29/16 and 6/30/16 by GZA.

2. Soil and rock classifications, properties and descriptions are based on engineering interpretation from available subsurface information by the Agency and may not necessarily reflect actual variations in subsurface conditions that may be encountered between individual boring or sample locations.

3. Observed water levels and/or conditions indicated are as recorded at the time of exploration and may vary according to the prevailing rainfall, methods of exploration and other factors.

4. Engineering judgment was exercised in preparing the subsurface information presented herein. Analysis and interpretation of subsurface data was performed and interpreted for Agency design and estimating purposes. Presentation of the information in the Contract is intended to provide the Contractor access to the same data available to the Agency. The subsurface information is presented in good faith and is not intended as a substitute for personal investigation, independent interpretation, independent analysis or judgment by the Contractor.

5. Pictorial structure details shown on the boring plan layout or soils profile are for illustrative purposes only and may not accurately portray final contract details.

6. Terminology used on boring logs to describe the hardness, degree of weathering, and spacing of fractures, joints and other discontinuities in the bedrock is defined in the AASHTO Manual on Subsurface Investigations, 1988.

7. Northing and Easting coordinates are shown in Vermont State Plane Grid North American Datum 1983 in meters and survey feet.

HOLE NO.	STATION	OFFSET (ft)	NORTHING	EASTING
GZ-1	520+44	8 RT	826881	1435346
GZ-2	520+44	11 LT	826893	1435361
GZ-3	519+85	9 RT	826925	1435307
GZ-4	519+86	12 LT	826938	1435323
GZ-5	518+15	9 RT	827054	1435196
GZ-6	518+14	11 LT	827068	1435211
GZ-7	517+57	8 RT	827098	1435159
GZ-8	517+57	11 LT	827111	1435173
GZ-201	518+34	45 LT	827075	1435249
GZ-202	518+37	39 RT	827017	1435188
GZ-203	519+56	44 LT	826982	1435328
GZ-204	519+59	37 RT	826926	1435269

PROJECT NAME: NORTH HERO GRAND ISLE BRIDGE

PROJECT NUMBER: BHF 028-1(26)

FILE NAME: zl2bl42borinfol.dgn
PROJECT LEADER: T. FRENCH
DESIGNED BY: D LAMOTHE
BORING INFORMATION SHEET

PLOT DATE: 10/7/2016
DRAWN BY: P LEFEBVRE
CHECKED BY: D LAMOTHE
SHEET 11 OF 172

STATE OF VERMONT
AGENCY OF TRANSPORTATION
MATERIALS & RESEARCH SECTION
SUBSURFACE INFORMATION

BORING LOG

North Hero – Grand Isle
BHF 028-1(26)
Bridge No. 8, U.S. Route 2

Boring No.: GZ-1
Page No.: 1 of 2
Pin No.:
Checked By: MA

Boring Crew: M. St. John(NEBC), M. Bergen(GZA)
Date Started: 8/05/15 Date Finished: 8/05/15
VTSPG NAD83: N 826881.00 ft E 1435346.00 ft
Station: 520+44.00 Offset: 8 R
Ground Elevation: 116.4 ft

	Casing	Sampler
Type:	WASH BORE	SS
I.D.:	4 in	1.38 in
Hammer Wt:	300 lb.	140 lb.
Hammer Fall:	24 in.	30 in.
Hammer/Rod Type:	Manual/AWJ	
Rig:	MOBILE B53 TRUCK	CE = 1.0

Groundwater Observations

Date	Depth (ft)	Notes
08/05/15	20.7	End of drilling

ABUTMENT 2
BTM OF FTG
EL = 105.68

Depth (ft)	Strata (1)	CLASSIFICATION OF MATERIALS (Description)	Run (Dip deg.)	Core Rec., % (RQD %)	Drill Rate minutes/ft	Blows/6" (N Value)	Moisture Content %	Gravel %	Sand %	Fines %
		0.0 ft – 0.66 ft, ASPHALT								
		Visual Description, (Modified Burmister), S-1 (1-3'): Dense, black, SILT, some fine to coarse Sand, little Gravel (weathered rock fragments), Moist, FILL Rec. = 0.8 ft				24-19-12-11 (31)				
5		Visual Description, (Modified Burmister), S-2 (5-7'): Medium dense, gray, SILT, some fine to coarse Sand, little Gravel (weathered rock fragments). Moist, Rec. = 1.0 ft, FILL				7-15-8-10 (23)				
10		Visual Description, (Modified Burmister), S-3 (10-12'): Very dense, black, fine to coarse SAND and fine Gravel, little Silt (weathered rock fragments). Wet, Rec. = 1.0 ft, FILL				11-23-28-32 (51)				
15		Visual Description, (Modified Burmister), S-4 (15-17'): Medium dense, gray, SILT, some fine to coarse Sand, little Gravel (weathered rock fragments). Wet, Rec. = 0.8 ft, FILL				11-12-10-13 (22)				
20		Visual Description, (Modified Burmister), S-5 (20-22'): Medium dense, gray, fine to coarse SAND and Gravel, little Silt (weathered rock fragments). Wet, Rec. = 0.66 ft, FILL				19-17-11-10 (27)				
25		Visual Description, (Modified Burmister), S-6 (25-27'): Medium dense, gray, SILT, some fine to coarse Sand, little Gravel (weathered rock fragments). Wet, Rec. = 0.66 ft, FILL				9-9-20-11 (29)				
30		Visual Description, (Modified Burmister), S-7 (30-32'): Medium dense, gray, SILT, some fine to coarse Sand, little Gravel (weathered rock fragments). Wet, Rec. = 0.58 ft, FILL				18-12-12-13 (24)				
		Visual Description, (Modified Burmister), S-8 (35-37'): Dense, gray,								

Notes:
1. Stratification lines represent approximate boundary between material types. Transition may be gradual.
2. N Values have not been corrected for hammer energy. CE is the hammer energy correction factor.
3. Water level readings have been made at times and under conditions stated. Fluctuations may occur due to other factors than those present at the time measurements were made.

2010 COPY 04.0190444.01 – HDR NORTH HERO – GRAND ISLE NHF 028-1.GPJ VERMONT AOT.GDT 8/31/16

STATE OF VERMONT
AGENCY OF TRANSPORTATION
MATERIALS & RESEARCH SECTION
SUBSURFACE INFORMATION

BORING LOG

North Hero – Grand Isle
BHF 028-1(26)
Bridge No. 8, U.S. Route 2

Boring No.: GZ-1
Page No.: 2 of 2
Pin No.:
Checked By: MA

Boring Crew: M. St. John(NEBC), M. Bergen(GZA)
Date Started: 8/05/15 Date Finished: 8/05/15
VTSPG NAD83: N 826881.00 ft E 1435346.00 ft
Station: 520+44.00 Offset: 8 R
Ground Elevation: 116.4 ft

	Casing	Sampler
Type:	WASH BORE	SS
I.D.:	4 in	1.38 in
Hammer Wt:	300 lb.	140 lb.
Hammer Fall:	24 in.	30 in.
Hammer/Rod Type:	Manual/AWJ	
Rig:	MOBILE B53 TRUCK	CE = 1.0

Groundwater Observations

Date	Depth (ft)	Notes
08/05/15	20.7	End of drilling

ABUTMENT 2
EST PILE TIP
EL = 71.4

Depth (ft)	Strata (1)	CLASSIFICATION OF MATERIALS (Description)	Run (Dip deg.)	Core Rec., % (RQD %)	Drill Rate minutes/ft	Blows/6" (N Value)	Moisture Content %	Gravel %	Sand %	Fines %
		SILT, little Gravel, trace fine Sand. Wet, GLACIAL TILL Rec. = 1.4 ft				9-16-28-40 (44)				
		39.0 ft – 40.0 ft, WEATHERED BEDROCK								
40		40.0 ft – 45.0 ft, C-1: Hard, fresh to slightly weathered, fine-grained, gray, SHALE; moderately fractured, fractures are horizontal, close, smooth, planar.	C-1	93 (63)	8.5 9 4 4.5 5					
45		45.0 ft – 50.0 ft, C-2: Hard, fresh to slightly weathered, fine-grained, gray, SHALE; moderately fractured, fractures are horizontal to slightly dipping, close, rough, planar.	C-2	95 (72)	4 4 4 5 5					
50		50.0 ft – 55.0 ft, C-3: Hard, fresh, fine-grained, gray, SHALE; moderately fractured, fractures are horizontal to slightly dipping, close, rough, undulating.	C-3	98 (87)	7 7.5 8 7 7					
55		55.0 ft – 60.0 ft, C-4: Hard, fresh, fine-grained, gray, SHALE; moderately fractured, fractures are horizontal to slightly dipping, close, rough, undulating.	C-4	96 (58)	8 8 9 7 7					
60		Hole stopped @ 60.0 ft								
65										

Notes:
1. Stratification lines represent approximate boundary between material types. Transition may be gradual.
2. N Values have not been corrected for hammer energy. CE is the hammer energy correction factor.
3. Water level readings have been made at times and under conditions stated. Fluctuations may occur due to other factors than those present at the time measurements were made.

2010 COPY 04.0190444.01 – HDR NORTH HERO – GRAND ISLE NHF 028-1.GPJ VERMONT AOT.GDT 8/31/16

PRELIMINARY PLANS

PROJECT NAME: NORTH HERO GRAND ISLE BRIDGE
PROJECT NUMBER: BHF 028-1(26)

FILE NAME: z12b142boringl.dgn
PROJECT LEADER: T. FRENCH
DESIGNED BY: D LAMOTHE
BORING LOG SHEET 1

PLOT DATE: 10/7/2016
DRAWN BY: P LEFEBVRE
CHECKED BY: D LAMOTHE
SHEET 12 OF 172

STATE OF VERMONT
AGENCY OF TRANSPORTATION
MATERIALS & RESEARCH SECTION
SUBSURFACE INFORMATION

BORING LOG

North Hero – Grand Isle
BHF 028-1(26)
Bridge No. 8, U.S. Route 2

Boring No.: GZ-2
Page No.: 1 of 2
Pin No.:
Checked By: MA

Boring Crew: M. St. John(NEBC), M. Bergen(GZA)
Date Started: 7/29/15 Date Finished: 7/30/15
VTSPG NAD83: N 826893.00 ft E 1435361.00 ft
Station: 520+44.00 Offset: 11 L
Ground Elevation: 116.4 ft

	Casing	Sampler
Type:	WASH BORE	SS
I.D.:	4 in	1.38 in
Hammer Wt:	300 lb.	140 lb.
Hammer Fall:	24 in.	30 in.
Hammer/Rod Type:	Manual/AWJ	
Rig:	MOBILE B53 TRUCK	CE = 1.0

Groundwater Observations

Date	Depth (ft)	Notes
07/30/15	14.5	1st reading
07/30/15	21.0	End of drilling
07/30/15	19.45	After drilling

Depth (ft)	Strata (1)	CLASSIFICATION OF MATERIALS (Description)	Run (Dip deg.)	Core Rec. % (RQD %)	Drill Rate minutes/ft	Blows/6" (N Value)	Moisture Content %	Gravel %	Sand %	Fines %
		0.0 ft – 0.66 ft, ASPHALT								
		Visual Description, (Modified Burmister), S-1 (1-3'): Medium dense, brown, fine to coarse SAND, some Gravel, little Silt (weathered rock fragments), Moist, FILL Rec. = 0.5 ft				16-14-15-12 (29)				
5		Visual Description, (Modified Burmister), S-2 (5-7'): Very dense, black, SILT, some fine to coarse Sand, little Gravel (weathered rock fragments). Moist, Rec. = 1.0 ft, FILL				42-39-14-17 (53)				
10		Visual Description, (Modified Burmister), S-3 (10-12'): Dense, gray/black, SILT, some fine to coarse Sand, little Gravel (weathered rock fragments). Wet, Rec. = 1.17 ft, FILL				7-18-22-24 (40)				
15		Visual Description, (Modified Burmister), S-4 (15-17'): Medium dense, gray, SILT, some fine to coarse Sand, little Gravel (weathered rock fragments). Wet, Rec. = 0.83 ft, FILL				7-12-8-12 (20)				
20		Visual Description, (Modified Burmister), S-5 (20-22'): Very dense, gray, SILT, some fine to coarse Sand, little Gravel (weathered rock fragments). Wet, Rec. = 0.5 ft, FILL				35-33-23-50/2" (56)				
25		Visual Description, (Modified Burmister), S-6 (25-27'): Dense, gray, SILT, some fine to coarse Sand, little Gravel (weathered rock fragments). Wet, Rec. = 0.5 ft, FILL				8-10-28-13 (38)				
30		Visual Description, (Modified Burmister), S-7 (30-32'): Dense, gray, SILT, some fine to coarse Sand, little Gravel (weathered rock fragments). Wet, Rec. = 0.33 ft, FILL				19-24-7-5 (31)				

ABUTMENT 2
BTM OF FTG
EL = 105.68

Notes:
1. Stratification lines represent approximate boundary between material types. Transition may be gradual.
2. N Values have not been corrected for hammer energy. CE is the hammer energy correction factor.
3. Water level readings have been made at times and under conditions stated. Fluctuations may occur due to other factors than those present at the time measurements were made.

2010 COPY 04.0190044.01 – HDR NORTH HERO – GRAND ISLE NHF 028-1.GPJ VERMONT AOT.GDT 8/31/16

STATE OF VERMONT
AGENCY OF TRANSPORTATION
MATERIALS & RESEARCH SECTION
SUBSURFACE INFORMATION

BORING LOG

North Hero – Grand Isle
BHF 028-1(26)
Bridge No. 8, U.S. Route 2

Boring No.: GZ-2
Page No.: 2 of 2
Pin No.:
Checked By: MA

Boring Crew: M. St. John(NEBC), M. Bergen(GZA)
Date Started: 7/29/15 Date Finished: 7/30/15
VTSPG NAD83: N 826893.00 ft E 1435361.00 ft
Station: 520+44.00 Offset: 11 L
Ground Elevation: 116.4 ft

	Casing	Sampler
Type:	WASH BORE	SS
I.D.:	4 in	1.38 in
Hammer Wt:	300 lb.	140 lb.
Hammer Fall:	24 in.	30 in.
Hammer/Rod Type:	Manual/AWJ	
Rig:	MOBILE B53 TRUCK	CE = 1.0

Groundwater Observations

Date	Depth (ft)	Notes
07/30/15	14.5	1st reading
07/30/15	21.0	End of drilling
07/30/15	19.45	After drilling

Depth (ft)	Strata (1)	CLASSIFICATION OF MATERIALS (Description)	Run (Dip deg.)	Core Rec. % (RQD %)	Drill Rate minutes/ft	Blows/6" (N Value)	Moisture Content %	Gravel %	Sand %	Fines %
		Visual Description, (Modified Burmister), S-8 (35-37'): Very dense, gray, SILT, little Gravel, trace fine Sand. Wet, Rec. = 1.67 ft, GLACIAL TILL				18-34-31-49 (65)				
		38.0 ft – 40.0 ft, WEATHERED BEDROCK								
40		40.0 ft – 45.0 ft, C-1: Hard, fresh to slightly weathered, fine-grained, gray, SHALE; moderately fractured, fractures are horizontal to slightly dipping, close to moderate, rough to smooth, planar.	C-1	96 (74)	5.5 4.5 7 5.5 5					
45		45.0 ft – 50.0 ft, C-2: Hard, fresh to slightly weathered, fine-grained, gray, SHALE; slightly to moderately fractured, fractures are horizontal to slightly dipping, close to moderate, rough, undulating.	C-2	100 (97)	3 2.5 3 3 3					
50		50.0 ft – 55.0 ft, C-3: Hard, fresh, fine-grained, gray, SHALE; slightly to moderately fractured, fractures are horizontal to slightly dipping, close, rough, undulating.	C-3	100 (87)	4 3 3 3 3.5					
55		55.0 ft – 60.0 ft, C-4: Hard, fresh, fine-grained, gray, SHALE; slightly to moderately fractured, fractures are horizontal to slightly dipping, close to moderate, rough, undulating.	C-4	96 (82)	3 3 3.5 3 4					
60		Hole stopped @ 60.0 ft								
65										

ABUTMENT 2
EST PILE TIP
EL = 71.4

Notes:
1. Stratification lines represent approximate boundary between material types. Transition may be gradual.
2. N Values have not been corrected for hammer energy. CE is the hammer energy correction factor.
3. Water level readings have been made at times and under conditions stated. Fluctuations may occur due to other factors than those present at the time measurements were made.

2010 COPY 04.0190044.01 – HDR NORTH HERO – GRAND ISLE NHF 028-1.GPJ VERMONT AOT.GDT 8/31/16

PRELIMINARY PLANS

HDR

PROJECT NAME: NORTH HERO GRAND ISLE BRIDGE
PROJECT NUMBER: BHF 028-1(26)

FILE NAME: z12b142boring2.dgn
PROJECT LEADER: T. FRENCH
DESIGNED BY: D LAMOTHE
BORING LOG SHEET 2

PLOT DATE: 10/7/2016
DRAWN BY: P LEFEBVRE
CHECKED BY: D LAMOTHE
SHEET 13 OF 172

STATE OF VERMONT
AGENCY OF TRANSPORTATION
MATERIALS & RESEARCH SECTION
SUBSURFACE INFORMATION

BORING LOG

North Hero – Grand Isle
BHF 028-1(26)
Bridge No. 8, U.S. Route 2

Boring No.: GZ-3
Page No.: 1 of 2
Pin No.:
Checked By: MA

Boring Crew: M. St. John(NEBC), M. Bergen(GZA)
Date Started: 7/30/15 Date Finished: 7/31/15
VTSPG NAD83: N 826925.00 ft E 1435307.00 ft
Station: 519+85.00 Offset: 9 R
Ground Elevation: 116.4 ft

	Casing	Sampler
Type:	WASH BORE	SS
I.D.:	4 in	1.38 in
Hammer Wt:	300 lb.	140 lb.
Hammer Fall:	24 in.	30 in.
Hammer/Rod Type:	Manual/AWJ	
Rig:	MOBILE B53 TRUCK	CE = 1.0

Groundwater Observations

Date	Depth (ft)	Notes

Depth (ft)	Strata (1)	CLASSIFICATION OF MATERIALS (Description)	Run (Dip deg.)	Core Rec., % (RQD %)	Drill Rate minutes/ft	Blows/6" (N Value)	Moisture Content %	Gravel %	Sand %	Fines %
		0.0 ft – 0.75 ft, BRIDGE DECK								
5										
10										
15										
20		19.5 ft – 23.0 ft, WATER								
25		Visual Description, (Modified Burmister), S-1 (23-25'): Dense, black, fine to coarse SAND and Gravel, little Silt (weathered rock fragments). Wet, Rec. = 0.5 ft, FILL				10-17-13-20 (30)				
30		Visual Description, (Modified Burmister), S-2 (28-30'): Loose, gray, SILT, little fine to coarse Sand, little Gravel (weathered rock fragments). Wet, Rec. = 0.5 ft, FILL				4-4-2-5 (6)				
		Visual Description, (Modified Burmister), S-3 (33-35'): Stiff, gray-brown, Clayey SILT, little Sand. Wet, Rec. = 1.67 ft				2-2-2-8 (10)				

PIER 2
BTM OF FOOTING
EL = 84.50

Notes:
1. Stratification lines represent approximate boundary between material types. Transition may be gradual.
2. N Values have not been corrected for hammer energy. CE is the hammer energy correction factor.
3. Water level readings have been made at times and under conditions stated. Fluctuations may occur due to other factors than those present at the time measurements were made.

2010 COPY 04.0190044.01 – HDR NORTH HERO – GRAND ISLE NHF 028-1.GPJ VERMONT AOT.GDT 8/31/16

STATE OF VERMONT
AGENCY OF TRANSPORTATION
MATERIALS & RESEARCH SECTION
SUBSURFACE INFORMATION

BORING LOG

North Hero – Grand Isle
BHF 028-1(26)
Bridge No. 8, U.S. Route 2

Boring No.: GZ-3
Page No.: 2 of 2
Pin No.:
Checked By: MA

Boring Crew: M. St. John(NEBC), M. Bergen(GZA)
Date Started: 7/30/15 Date Finished: 7/31/15
VTSPG NAD83: N 826925.00 ft E 1435307.00 ft
Station: 519+85.00 Offset: 9 R
Ground Elevation: 116.4 ft

	Casing	Sampler
Type:	WASH BORE	SS
I.D.:	4 in	1.38 in
Hammer Wt:	300 lb.	140 lb.
Hammer Fall:	24 in.	30 in.
Hammer/Rod Type:	Manual/AWJ	
Rig:	MOBILE B53 TRUCK	CE = 1.0

Groundwater Observations

Date	Depth (ft)	Notes

Depth (ft)	Strata (1)	CLASSIFICATION OF MATERIALS (Description)	Run (Dip deg.)	Core Rec., % (RQD %)	Drill Rate minutes/ft	Blows/6" (N Value)	Moisture Content %	Gravel %	Sand %	Fines %
		38.0 ft – 40.0 ft, WEATHERED BEDROCK								
40		40.0 ft – 45.0 ft, C-1: Hard, fresh to slightly weathered, fine-grained, gray, SHALE; moderately fractured, fractures are horizontal to slightly dipping, close, rough to smooth, planar.	C-1	90 (67)	11 6 8 6 5					
45		45.0 ft – 50.0 ft, C-2: Hard, fresh, fine-grained, gray, SHALE; slightly to moderately fractured, fractures are horizontal to slightly dipping, close, rough to smooth, planar.	C-2	100 (68)	3.5 3.5 3 2.5 3					
50		50.0 ft – 55.0 ft, C-3: Hard, fresh, fine-grained, gray, SHALE; slightly to moderately fractured, fractures are horizontal to slightly dipping, close, rough to smooth, undulating.	C-3	100 (77)	3 3 3 3 3					
55		55.0 ft – 60.0 ft, C-4: Hard, fresh, fine-grained, gray, SHALE; moderately fractured, fractures are horizontal to slightly dipping, close, rough to smooth, undulating.	C-4	98 (82)	3 3 3 3 2.5					
60		Hole stopped @ 60.0 ft								
65										

PIER 2
BTM OF TREMIE
EL = 76.4

Notes:
1. Stratification lines represent approximate boundary between material types. Transition may be gradual.
2. N Values have not been corrected for hammer energy. CE is the hammer energy correction factor.
3. Water level readings have been made at times and under conditions stated. Fluctuations may occur due to other factors than those present at the time measurements were made.

2010 COPY 04.0190044.01 – HDR NORTH HERO – GRAND ISLE NHF 028-1.GPJ VERMONT AOT.GDT 8/31/16

PRELIMINARY PLANS

PROJECT NAME: NORTH HERO GRAND ISLE BRIDGE
PROJECT NUMBER: BHF 028-1(26)

FILE NAME: z12b142boring3.dgn
PROJECT LEADER: T. FRENCH
DESIGNED BY: D LAMOTHE
BORING LOG SHEET 3

PLOT DATE: 10/7/2016
DRAWN BY: P LEFEBVRE
CHECKED BY: D LAMOTHE
SHEET 14 OF 172

STATE OF VERMONT
AGENCY OF TRANSPORTATION
MATERIALS & RESEARCH SECTION
SUBSURFACE INFORMATION

BORING LOG

North Hero – Grand Isle
BHF 028-1(26)
Bridge No. 8, U.S. Route 2

Boring No.: GZ-4
Page No.: 1 of 2
Pin No.:
Checked By: MA

Boring Crew: M. St. John(NEBC), M. Bergen(GZA)
Date Started: 7/27/15 Date Finished: 7/27/15
VTSPG NAD83: N 826938.00 ft E 1435323.00 ft
Station: 519+86.00 Offset: 12 L
Ground Elevation: 116.4 ft

	Casing	Sampler
Type:	WASH BORE	SS
I.D.:	4 in	1.38 in
Hammer Wt:	300 lb.	140 lb.
Hammer Fall:	24 in.	30 in.
Hammer/Rod Type:	Manual/AWJ	
Rig:	MOBILE B53 TRUCK	CE = 1.0

Groundwater Observations

Date	Depth (ft)	Notes

Depth (ft)	Strata (1)	CLASSIFICATION OF MATERIALS (Description)	Run (Dip deg.)	Core Rec. % (RQD %)	Drill Rate minutes/ft	Blows/6" (N Value)	Moisture Content %	Gravel %	Sand %	Fines %
		0.0 ft – 0.75 ft, BRIDGE DECK								
5										
10										
15										
20		19.6 ft – 23.0 ft, WATER								
25		Visual Description, (Modified Burmister), S-1 (23-25'): Medium dense, black, fine to coarse SAND and Gravel, little Silt (weathered rock fragments), trace Organics. Wet, Rec. = 0.33 ft, FILL				6-7-6-5 (13)				
30		Visual Description, (Modified Burmister), S-2 (28-30'): Medium dense, black, fine to coarse SAND and Gravel, little Silt (weathered rock fragments). Wet, Rec. = 0.25 ft, FILL				12-9-9-21 (18)				
		Visual Description, (Modified Burmister), S-3A (33-34.3'): Very soft, gray, Clayey SILT, little fine Sand, trace Organics. Wet, Rec. = 2.0 ft				1-1-1-1 (2)				
		Visual Description, (Modified Burmister), S-3B (34.3-35'): Very soft,								

PIER 2
BTM OF FOOTING
EL = 84.50

Notes:
1. Stratification lines represent approximate boundary between material types. Transition may be gradual.
2. N Values have not been corrected for hammer energy. CE is the hammer energy correction factor.
3. Water level readings have been made at times and under conditions stated. Fluctuations may occur due to other factors than those present at the time measurements were made.

STATE OF VERMONT
AGENCY OF TRANSPORTATION
MATERIALS & RESEARCH SECTION
SUBSURFACE INFORMATION

BORING LOG

North Hero – Grand Isle
BHF 028-1(26)
Bridge No. 8, U.S. Route 2

Boring No.: GZ-4
Page No.: 2 of 2
Pin No.:
Checked By: MA

Boring Crew: M. St. John(NEBC), M. Bergen(GZA)
Date Started: 7/27/15 Date Finished: 7/27/15
VTSPG NAD83: N 826938.00 ft E 1435323.00 ft
Station: 519+86.00 Offset: 12 L
Ground Elevation: 116.4 ft

	Casing	Sampler
Type:	WASH BORE	SS
I.D.:	4 in	1.38 in
Hammer Wt:	300 lb.	140 lb.
Hammer Fall:	24 in.	30 in.
Hammer/Rod Type:	Manual/AWJ	
Rig:	MOBILE B53 TRUCK	CE = 1.0

Groundwater Observations

Date	Depth (ft)	Notes

Depth (ft)	Strata (1)	CLASSIFICATION OF MATERIALS (Description)	Run (Dip deg.)	Core Rec. % (RQD %)	Drill Rate minutes/ft	Blows/6" (N Value)	Moisture Content %	Gravel %	Sand %	Fines %
		gray, CLAY & SILT, trace Sand. Wet								
		(Modified Burmister), S-4: (38) No recovery. Split Spoon Refusal, Rec. = 0.0 ft, 38.0 ft – 38.0 ft				50/0" (50)				
40		39.0 ft – 40.0 ft, WEATHERED BEDROCK								
		40.0 ft – 45.0 ft, C-1: Hard, fresh to slightly weathered, fine-grained, gray, SHALE; moderately fractured, fractures are moderately dipping, close, rough, planar.	C-1	88 (42)	7, 6.5, 5, 2.5, 4					
45		45.0 ft – 50.0 ft, C-2: Hard, fresh, fine-grained, gray, SHALE; moderately fractured, fractures are horizontal to slightly dipping, close to moderate, rough, planar.	C-2	100 (87)	3.5, 4, 3.5, 3, 3.5					
50		50.0 ft – 55.0 ft, C-3: Hard, fresh, fine-grained, gray, SHALE; moderately fractured, fractures are horizontal to slightly dipping, close to moderate, rough, undulating.	C-3	95 (82)	2, 2, 2.5, 2.5, 3					
55		55.0 ft – 60.0 ft, C-4: Hard, fresh, fine-grained, gray, SHALE; moderately to severely fractured, fractures are moderately dipping to vertical, moderate to close, rough to smooth, undulating.	C-4	100 (43)	3, 3, 3, 3, 3					
60		Hole stopped @ 60.0 ft								
65										

PIER 2
BTM OF TREMIE
EL = 76.4

Notes:
1. Stratification lines represent approximate boundary between material types. Transition may be gradual.
2. N Values have not been corrected for hammer energy. CE is the hammer energy correction factor.
3. Water level readings have been made at times and under conditions stated. Fluctuations may occur due to other factors than those present at the time measurements were made.

2010 COPY 04019044.01 - HDR NORTH HERO - GRAND ISLE NHF 028-1.GPJ VERMONT AOT.GDT 8/31/16

PRELIMINARY PLANS

PROJECT NAME: NORTH HERO GRAND ISLE BRIDGE
PROJECT NUMBER: BHF 028-1(26)

FILE NAME: z12b142boring4.dgn
PROJECT LEADER: T. FRENCH
DESIGNED BY: D LAMOTHE
BORING LOG SHEET 4

PLOT DATE: 10/7/2016
DRAWN BY: P LEFEBVRE
CHECKED BY: D LAMOTHE
SHEET 15 OF 172

STATE OF VERMONT
AGENCY OF TRANSPORTATION
MATERIALS & RESEARCH SECTION
SUBSURFACE INFORMATION

BORING LOG

North Hero – Grand Isle
BHF 028-1(26)
Bridge No. 8, U.S. Route 2

Boring No.: GZ-5
Page No.: 1 of 2
Pin No.:
Checked By: MA

Boring Crew: M. St. John(NEBC), M. Bergen(GZA)
Date Started: 8/03/15 Date Finished: 8/03/15
VTSPG NAD83: N 827054.00 ft E 1435196.00 ft
Station: 518+15.00 Offset: 9 R
Ground Elevation: 116.4 ft

	Casing	Sampler
Type:	WASH BORE	SS
I.D.:	4 in	1.38 in
Hammer Wt:	300 lb.	140 lb.
Hammer Fall:	24 in.	30 in.
Hammer/Rod Type:	Manual/AWJ	
Rig:	MOBILE B53 TRUCK	CE = 1.0

Groundwater Observations

Date	Depth (ft)	Notes

Depth (ft)	Strata (1)	CLASSIFICATION OF MATERIALS (Description)	Run (Dip deg.)	Core Rec. % (RQD %)	Drill Rate minutes/ft	Blows/6" (N Value)	Moisture Content %	Gravel %	Sand %	Fines %
		0.0 ft – 0.75 ft, BRIDGE DECK								
5										
10										
15										
20		19.6 ft – 22.5 ft, WATER								
25		Visual Description, (Modified Burmister), S-1 (23-25'): Medium dense, black, SILT, some fine to coarse Sand, little Gravel (weathered rock fragments). Wet, FILL Rec. = 0.5 ft				8-7-6-7 (13)				
30		Visual Description, (Modified Burmister), S-2 (28-30'): Loose, gray, SILT, some fine to coarse Sand, little Gravel (weathered rock fragments). Wet, Rec. = 0.33 ft, FILL				4-2-2-4 (4)				
		Visual Description, (Modified Burmister), S-3 (33-35'): Soft, gray-brown, SILT & CLAY, little Sand. Wet Rec. = 1.0 ft				4-1-1-2 (2)				

PIER I
BTM OF FOOTING
EL = 83.00

Notes:
1. Stratification lines represent approximate boundary between material types. Transition may be gradual.
2. N Values have not been corrected for hammer energy. CE is the hammer energy correction factor.
3. Water level readings have been made at times and under conditions stated. Fluctuations may occur due to other factors than those present at the time measurements were made.

STATE OF VERMONT
AGENCY OF TRANSPORTATION
MATERIALS & RESEARCH SECTION
SUBSURFACE INFORMATION

BORING LOG

North Hero – Grand Isle
BHF 028-1(26)
Bridge No. 8, U.S. Route 2

Boring No.: GZ-5
Page No.: 2 of 2
Pin No.:
Checked By: MA

Boring Crew: M. St. John(NEBC), M. Bergen(GZA)
Date Started: 8/03/15 Date Finished: 8/03/15
VTSPG NAD83: N 827054.00 ft E 1435196.00 ft
Station: 518+15.00 Offset: 9 R
Ground Elevation: 116.4 ft

	Casing	Sampler
Type:	WASH BORE	SS
I.D.:	4 in	1.38 in
Hammer Wt:	300 lb.	140 lb.
Hammer Fall:	24 in.	30 in.
Hammer/Rod Type:	Manual/AWJ	
Rig:	MOBILE B53 TRUCK	CE = 1.0

Groundwater Observations

Date	Depth (ft)	Notes

Depth (ft)	Strata (1)	CLASSIFICATION OF MATERIALS (Description)	Run (Dip deg.)	Core Rec. % (RQD %)	Drill Rate minutes/ft	Blows/6" (N Value)	Moisture Content %	Gravel %	Sand %	Fines %
		Visual Description, (Modified Burmister), S-4 (38-39.25'): Very dense, gray, SILT, trace Gravel, trace fine Sand. Wet, GLACIAL TILL Rec. = 1.25 ft				18-18-100/3" (100)				
		39.25 ft – 40.0 ft, WEATHERED BEDROCK								
40		40.0 ft – 45.0 ft, C-1: Hard, fresh to slightly weathered, fine-grained, gray, SHALE; moderately fractured, fractures are horizontal, close, smooth, planar.	C-1	88 (42)	6.5 6.5 9 3.5 4					
45		45.0 ft – 50.0 ft, C-2: Hard, fresh, fine-grained, gray, SHALE; slightly to moderately fractured, fractures are horizontal, close, smooth, undulating.	C-2	100 (73)	4 3.5 5 4.5 5					
50		50.0 ft – 55.0 ft, C-3: Hard, fresh, fine-grained, gray, SHALE; moderately fractured, fractures are horizontal to vertical, close, smooth, undulating.	C-3	100 (47)	3 3 4.5 5 5					
55		55.0 ft – 60.0 ft, C-4: Hard, fresh to slightly weathered, fine-grained, gray, SHALE; moderately fractured, fractures are horizontal, close to moderate, smooth, undulating.	C-4	96 (65)	6 3 3.5 3.5 3.5					
60		Hole stopped @ 60.0 ft								
65										

PIER I
BTM OF TREMIE
EL = 76.4

Notes:
1. Stratification lines represent approximate boundary between material types. Transition may be gradual.
2. N Values have not been corrected for hammer energy. CE is the hammer energy correction factor.
3. Water level readings have been made at times and under conditions stated. Fluctuations may occur due to other factors than those present at the time measurements were made.

2010 COPY 04.0190044.01 – NOR NORTH HERO – GRAND ISLE NHF 028-1.GPJ VERMONT AOT.GDT 8/31/16

PRELIMINARY PLANS

PROJECT NAME: NORTH HERO GRAND ISLE BRIDGE
PROJECT NUMBER: BHF 028-1(26)

FILE NAME: z12b142boring5.dgn
PROJECT LEADER: T. FRENCH
DESIGNED BY: D LAMOTHE
BORING LOG SHEET 5

PLOT DATE: 10/7/2016
DRAWN BY: P LEFEBVRE
CHECKED BY: D LAMOTHE
SHEET 16 OF 172

STATE OF VERMONT
AGENCY OF TRANSPORTATION
MATERIALS & RESEARCH SECTION
SUBSURFACE INFORMATION

BORING LOG

North Hero – Grand Isle
BHF 028-1(26)
Bridge No. 8, U.S. Route 2

Boring No.: GZ-6
Page No.: 1 of 2
Pin No.:
Checked By: MA

Boring Crew: M. St. John(NEBC), M. Bergen(GZA)
Date Started: 7/28/15 Date Finished: 7/28/15
VTSPG NAD83: N 827068.00 ft E 1435211.00 ft
Station: 518+14.00 Offset: 11 L
Ground Elevation: 116.4 ft

	Casing	Sampler
Type:	WASH BORE	SS
I.D.:	4 in	1.38 in
Hammer Wt:	300 lb.	140 lb.
Hammer Fall:	24 in.	30 in.
Hammer/Rod Type:	Manual/AWJ	
Rig:	MOBILE B53 TRUCK	CE = 1.0

Groundwater Observations

Date	Depth (ft)	Notes

Depth (ft)	Strata (1)	CLASSIFICATION OF MATERIALS (Description)	Run (Dip deg.)	Core Rec. % (RQD %)	Drill Rate minutes/ft	Blows/6" (N Value)	Moisture Content %	Gravel %	Sand %	Fines %
		0.0 ft – 0.75 ft, BRIDGE DECK								
5										
10										
15										
20		19.6 ft – 23.0 ft, WATER								
25		Visual Description, (Modified Burmister), S-1 (23-25'): Dense, black, fine to coarse SAND and Gravel, little Silt (weathered rock fragments). Wet, Rec. = 1.0 ft, FILL				9-13-30-19 (43)				
30		Visual Description, (Modified Burmister), S-2 (28-30'): Medium dense, black, fine to coarse SAND and Gravel, little Silt (weathered rock fragments). Wet, Rec. = 0.33 ft, FILL				3-5-7-6 (12)				
		Visual Description, (Modified Burmister), S-3 (33-35'): Medium stiff, gray, SILT & CLAY, little Sand. Wet, Rec. = 0.33 ft				6-5-3-3 (8)				

PIER I
BTM OF FOOTING
EL = 83.00

Notes:
1. Stratification lines represent approximate boundary between material types. Transition may be gradual.
2. N Values have not been corrected for hammer energy. CE is the hammer energy correction factor.
3. Water level readings have been made at times and under conditions stated. Fluctuations may occur due to other factors than those present at the time measurements were made.

2010 COPY 04.0190044.01 - HDR NORTH HERO - GRAND ISLE BHF 028-1.GPJ VERMONT AOT.GDT 8/31/16

STATE OF VERMONT
AGENCY OF TRANSPORTATION
MATERIALS & RESEARCH SECTION
SUBSURFACE INFORMATION

BORING LOG

North Hero – Grand Isle
BHF 028-1(26)
Bridge No. 8, U.S. Route 2

Boring No.: GZ-6
Page No.: 2 of 2
Pin No.:
Checked By: MA

Boring Crew: M. St. John(NEBC), M. Bergen(GZA)
Date Started: 7/28/15 Date Finished: 7/28/15
VTSPG NAD83: N 827068.00 ft E 1435211.00 ft
Station: 518+14.00 Offset: 11 L
Ground Elevation: 116.4 ft

	Casing	Sampler
Type:	WASH BORE	SS
I.D.:	4 in	1.38 in
Hammer Wt:	300 lb.	140 lb.
Hammer Fall:	24 in.	30 in.
Hammer/Rod Type:	Manual/AWJ	
Rig:	MOBILE B53 TRUCK	CE = 1.0

Groundwater Observations

Date	Depth (ft)	Notes

Depth (ft)	Strata (1)	CLASSIFICATION OF MATERIALS (Description)	Run (Dip deg.)	Core Rec. % (RQD %)	Drill Rate minutes/ft	Blows/6" (N Value)	Moisture Content %	Gravel %	Sand %	Fines %
40		Visual Description, (Modified Burmister), S-4 (38-40'): Medium dense, gray, SILT, some fine Sand, little Gravel. Wet, Rec. = 0.75 ft, GLACIAL TILL				10-7-13-8 (20)				
		42.5 ft – 45.0 ft, WEATHERED BEDROCK								
45		45.0 ft – 50.0 ft, C-1: Hard, fresh to slightly weathered, fine-grained, gray, SHALE; moderately fractured, fractures are horizontal to moderately dipping, close to moderate, rough to smooth, undulating.	C-1	95 (63)	4.5 5.5 6 4 3.5					
50		50.0 ft – 55.0 ft, C-2: Hard, fresh, fine-grained, gray, SHALE; moderately to severely fractured, fractures are moderately dipping to vertical, close to moderate, rough to smooth, undulating.	C-2	100 (40)	4 3 2 2 3					
55		55.0 ft – 60.0 ft, C-3: Hard, fresh, fine-grained, gray, SHALE; moderately to severely fractured, fractures are horizontal to moderately dipping, close, rough to smooth, undulating.	C-3	100 (55)	3 3 2 3 3					
60		60.0 ft – 65.0 ft, C-4: Hard, fresh, fine-grained, gray, SHALE; moderately fractured, fractures are horizontal to moderately dipping, close, smooth, undulating.	C-4	100 (80)	3 2 2 2.5 2.5					
65		Hole stopped @ 65.0 ft								

PIER I
BTM OF TREMIE
EL = 71.4

Notes:
1. Stratification lines represent approximate boundary between material types. Transition may be gradual.
2. N Values have not been corrected for hammer energy. CE is the hammer energy correction factor.
3. Water level readings have been made at times and under conditions stated. Fluctuations may occur due to other factors than those present at the time measurements were made.

2010 COPY 04.0190044.01 - HDR NORTH HERO - GRAND ISLE BHF 028-1.GPJ VERMONT AOT.GDT 8/31/16

PRELIMINARY PLANS

PROJECT NAME: NORTH HERO GRAND ISLE BRIDGE
PROJECT NUMBER: BHF 028-1(26)

FILE NAME: z12b142boring6.dgn
PROJECT LEADER: T. FRENCH
DESIGNED BY: D LAMOTHE
BORING LOG SHEET 6

PLOT DATE: 10/7/2016
DRAWN BY: P LEFEBVRE
CHECKED BY: D LAMOTHE
SHEET 17 OF 172

STATE OF VERMONT
AGENCY OF TRANSPORTATION
MATERIALS & RESEARCH SECTION
SUBSURFACE INFORMATION

BORING LOG

North Hero – Grand Isle
BHF 028-1(26)
Bridge No. 8, U.S. Route 2

Boring No.: GZ-7
Page No.: 1 of 2
Pin No.:
Checked By: MA

Boring Crew: M. St. John(NEBC), M. Bergen(GZA)
Date Started: 8/04/15 Date Finished: 8/04/15
VTSPG NAD83: N 827098.00 ft E 1435159.00 ft
Station: 517+57.00 Offset: 8 R
Ground Elevation: 116.4 ft

	Casing	Sampler
Type:	WASH BORE	SS
I.D.:	4 in	1.38 in
Hammer Wt:	300 lb.	140 lb.
Hammer Fall:	24 in.	30 in.
Hammer/Rod Type:	Manual/AWJ	
Rig:	MOBILE B53 TRUCK	CE = 1.0

Groundwater Observations

Date	Depth (ft)	Notes

Depth (ft)	Strata (1)	CLASSIFICATION OF MATERIALS (Description)	Run (Dip deg.)	Core Rec. % (RQD %)	Drill Rate minutes/ft	Blows/6" (N Value)	Moisture Content %	Gravel %	Sand %	Fines %
		0.0 ft – 0.66 ft, ASPHALT								
		Visual Description, (Modified Burmister), S-1 (1-3'): Medium dense, black, fine to coarse SAND, some Silt, some Gravel. Moist, FILL Rec. = 1.0 ft				9-12-12-11 (24)				
5		Visual Description, (Modified Burmister), S-2 (5-7'): Medium dense, black, fine to coarse SAND, some Silt, trace Gravel. Moist, Rec. = 1.0 ft, FILL				8-11-8-3 (19)				
10		Visual Description, (Modified Burmister), S-3 (10-12'): Medium dense, dark gray, SILT, some fine to coarse Sand, little Gravel (weathered rock fragments), with wood fragments. Wet, Rec. = 0.5 ft, FILL				12-6-5-7 (11)				
15		Visual Description, (Modified Burmister), S-4 (15-16.25'): Very dense, gray, fine to coarse SAND and Gravel, little Silt (weathered rock fragments). Wet, Rec. = 0.42 ft, FILL				5-12-50/3" (50)				
20		Visual Description, (Modified Burmister), S-5 (20-22'): Medium dense, gray, SILT, some fine to coarse Sand, little Gravel (weathered rock fragments). Wet, Rec. = 0.58 ft, FILL				7-8-18-11 (26)				
25		Visual Description, (Modified Burmister), S-6 (25-27'): Medium dense, gray, fine to coarse SAND and Gravel, little Silt (weathered rock fragments). Wet, Rec. = 0.42 ft, FILL				9-7-7-7 (14)				
30		Visual Description, (Modified Burmister), S-7 (30-32'): Medium dense, gray, fine to coarse SAND and Gravel, little Silt (weathered rock fragments). Wet, Rec. = 0.42 ft, FILL				6-5-7-8 (12)				
		Visual Description, (Modified Burmister), S-8 (35-37'): Soft, gray, Silty CLAY. Wet								

ABUTMENT I
BTM OF FOOTING
EL = 105.68

Notes:
1. Stratification lines represent approximate boundary between material types. Transition may be gradual.
2. N Values have not been corrected for hammer energy. CE is the hammer energy correction factor.
3. Water level readings have been made at times and under conditions stated. Fluctuations may occur due to other factors than those present at the time measurements were made.

STATE OF VERMONT
AGENCY OF TRANSPORTATION
MATERIALS & RESEARCH SECTION
SUBSURFACE INFORMATION

BORING LOG

North Hero – Grand Isle
BHF 028-1(26)
Bridge No. 8, U.S. Route 2

Boring No.: GZ-7
Page No.: 2 of 2
Pin No.:
Checked By: MA

Boring Crew: M. St. John(NEBC), M. Bergen(GZA)
Date Started: 8/04/15 Date Finished: 8/04/15
VTSPG NAD83: N 827098.00 ft E 1435159.00 ft
Station: 517+57.00 Offset: 8 R
Ground Elevation: 116.4 ft

	Casing	Sampler
Type:	WASH BORE	SS
I.D.:	4 in	1.38 in
Hammer Wt:	300 lb.	140 lb.
Hammer Fall:	24 in.	30 in.
Hammer/Rod Type:	Manual/AWJ	
Rig:	MOBILE B53 TRUCK	CE = 1.0

Groundwater Observations

Date	Depth (ft)	Notes

Depth (ft)	Strata (1)	CLASSIFICATION OF MATERIALS (Description)	Run (Dip deg.)	Core Rec. % (RQD %)	Drill Rate minutes/ft	Blows/6" (N Value)	Moisture Content %	Gravel %	Sand %	Fines %
		Rec. = 1.0 ft				2-1-2-2 (3)				
		39.0 ft – 40.0 ft, WEATHERED BEDROCK								
40		40.0 ft – 45.0 ft, C-1: Hard, fresh, fine-grained, gray, SHALE; moderately fractured, fractures are horizontal, close, smooth, planar.	C-1	100 (68)	5 6.5 4.5 6 6					
45		45.0 ft – 50.0 ft, C-2: Hard, fresh, fine-grained, gray, SHALE; moderately fractured, fractures are horizontal, close, smooth, planar.	C-2	96 (72)	6.5 6 6 7 6					
50		50.0 ft – 55.0 ft, C-3: Hard, fresh to slightly weathered, fine-grained, gray, SHALE; moderately to severely fractured, fractures are horizontal, close, smooth, planar.	C-3	96 (48)	13 9.5 11.5 17 12.5					
55		55.0 ft – 60.0 ft, C-4: Hard, fresh to slightly weathered, fine-grained, gray, SHALE; moderately to severely fractured, fractures are horizontal, close, smooth, planar.	C-4	95 (43)	6 7.5 7 9 7					
60		Hole stopped @ 60.0 ft								
65										

ABUTMENT I
EST. PILE TIP
EL = 71.4

Notes:
1. Stratification lines represent approximate boundary between material types. Transition may be gradual.
2. N Values have not been corrected for hammer energy. CE is the hammer energy correction factor.
3. Water level readings have been made at times and under conditions stated. Fluctuations may occur due to other factors than those present at the time measurements were made.

2010 COPY 04.0190444.01 – HDR NORTH HERO – GRAND ISLE NHF 028-1.GPJ VERMONT AOT.GDT 8/31/16

PRELIMINARY PLANS

PROJECT NAME: NORTH HERO GRAND ISLE BRIDGE
PROJECT NUMBER: BHF 028-1(26)

FILE NAME: z12b142boring7.dgn
PROJECT LEADER: T. FRENCH
DESIGNED BY: D LAMOTHE
BORING LOG SHEET 7

PLOT DATE: 10/7/2016
DRAWN BY: P LEFEBVRE
CHECKED BY: D LAMOTHE
SHEET 18 OF 172

STATE OF VERMONT
AGENCY OF TRANSPORTATION
MATERIALS & RESEARCH SECTION
SUBSURFACE INFORMATION

BORING LOG

North Hero – Grand Isle
BHF 028-1(26)
Bridge No. 8, U.S. Route 2

Boring No.: GZ-8
Page No.: 1 of 2
Pin No.:
Checked By: MA

Boring Crew: M. St. John(NEBC), M. Bergen(GZA)
Date Started: 7/28/15 Date Finished: 7/29/15
VTSPG NAD83: N 827111.00 ft E 1435173.00 ft
Station: 517+57.00 Offset: 11 L
Ground Elevation: 116.4 ft

	Casing	Sampler
Type:	WASH BORE	SS
I.D.:	4 in	1.38 in
Hammer Wt:	300 lb.	140 lb.
Hammer Fall:	24 in.	30 in.
Hammer/Rod Type:	Manual/AWJ	
Rig:	MOBILE B53 TRUCK	CE = 1.0

Groundwater Observations

Date	Depth (ft)	Notes

ABUTMENT I
BTM OF FOOTING
EL = 105.68

Depth (ft)	Strata (1)	CLASSIFICATION OF MATERIALS (Description)	Run (Dip deg.)	Core Rec., % (RQD %)	Drill Rate minutes/ft	Blows/6" (N Value)	Moisture Content %	Gravel %	Sand %	Fines %
		0.0 ft – 0.75 ft, ASPHALT								
		Visual Description, (Modified Burmister), S-1 (1-3'): Medium dense, brown, fine to coarse SAND, little Gravel, trace Silt. Moist, FILL Rec. = 0.25 ft				17-12-13-21 (25)				
5		Visual Description, (Modified Burmister), S-2 (5-7'): Medium dense, black, fine to medium SAND, little Gravel, trace Silt (weathered rock fragments). Moist, Rec. = 1.0 ft, FILL				5-7-9-8 (16)				
10		Visual Description, (Modified Burmister), S-3 (10-12'): Medium dense, gray, SILT, some fine to coarse Sand, little Gravel (weathered rock fragments). Wet, Rec. = 0.58 ft, FILL				3-6-11-13 (17)				
15		Visual Description, (Modified Burmister), S-4 (15-17'): Very loose, brown, fine to coarse GRAVEL, some Silt, some fine to coarse Sand (weathered rock fragments). Wet, Rec. = 0.42 ft, FILL				2-1-1-2 (2)				
20		Visual Description, (Modified Burmister), S-5 (20-21.3'): Very dense, black, fine to coarse SAND and Gravel, little Silt (weathered rock fragments). Wet, Rec. = 0.67 ft, FILL				4-12-100/4" (100)				
25		Visual Description, (Modified Burmister), S-6 (25-27'): No recovery., Rec. = 0.0 ft, FILL				7-7-4-8 (11)				
30		Visual Description, (Modified Burmister), S-7 (30-32'): Loose, gray, SILT, some fine to coarse Sand, little Gravel (weathered rock fragments). Wet, Rec. = 0.58 ft, FILL				5-3-5-8 (8)				

Notes:
1. Stratification lines represent approximate boundary between material types. Transition may be gradual.
2. N Values have not been corrected for hammer energy. CE is the hammer energy correction factor.
3. Water level readings have been made at times and under conditions stated. Fluctuations may occur due to other factors than those present at the time measurements were made.

STATE OF VERMONT
AGENCY OF TRANSPORTATION
MATERIALS & RESEARCH SECTION
SUBSURFACE INFORMATION

BORING LOG

North Hero – Grand Isle
BHF 028-1(26)
Bridge No. 8, U.S. Route 2

Boring No.: GZ-8
Page No.: 2 of 2
Pin No.:
Checked By: MA

Boring Crew: M. St. John(NEBC), M. Bergen(GZA)
Date Started: 7/28/15 Date Finished: 7/29/15
VTSPG NAD83: N 827111.00 ft E 1435173.00 ft
Station: 517+57.00 Offset: 11 L
Ground Elevation: 116.4 ft

	Casing	Sampler
Type:	WASH BORE	SS
I.D.:	4 in	1.38 in
Hammer Wt:	300 lb.	140 lb.
Hammer Fall:	24 in.	30 in.
Hammer/Rod Type:	Manual/AWJ	
Rig:	MOBILE B53 TRUCK	CE = 1.0

Groundwater Observations

Date	Depth (ft)	Notes

ABUTMENT I
EST. PILE TIP
EL = 71.4

Depth (ft)	Strata (1)	CLASSIFICATION OF MATERIALS (Description)	Run (Dip deg.)	Core Rec., % (RQD %)	Drill Rate minutes/ft	Blows/6" (N Value)	Moisture Content %	Gravel %	Sand %	Fines %
		Visual Description, (Modified Burmister), S-8A (35-35.2'): Loose, gray, SILT, some fine to coarse Sand, little Gravel (weathered rock fragments). Wet, Rec. = 1.66 ft, FILL				6-2-3-7 (5)				
		Visual Description, (Modified Burmister), S-8B (35.2-37'): Medium stiff, gray, SILT & CLAY, trace Sand. Wet								
40		40.0 ft – 45.0 ft, C-1: Moderately hard, fresh, fine-grained, gray, SHALE; moderately to severely fractured, fractures are horizontal to slightly dipping, close, rough to smooth, planar.	C-1	88 (30)	8 7 7 9.5 12.5					
45		45.0 ft – 50.0 ft, C-2: Moderately hard, fresh, fine-grained, gray, SHALE; moderately fractured, fractures are horizontal to slightly dipping, close to wide, rough to smooth, planar.	C-2	100 (78)	5.5 7 6.5 5.5 9					
50		50.0 ft – 55.0 ft, C-3: Moderately hard, fresh, fine-grained, gray, SHALE; moderately fractured, fractures are horizontal to slightly dipping, close to wide, rough to smooth, planar.	C-3	100 (57)	4 6 4 5 7					
55		55.0 ft – 59.0 ft, C-4: Moderately hard, slightly weathered, fine-grained, gray, SHALE; moderately fractured, fractures are horizontal to vertical, close, smooth to rough, planar.	C-4	100 (42)	5 4 4 6					
60		Hole stopped @ 59.0 ft								
65										

Notes:
1. Stratification lines represent approximate boundary between material types. Transition may be gradual.
2. N Values have not been corrected for hammer energy. CE is the hammer energy correction factor.
3. Water level readings have been made at times and under conditions stated. Fluctuations may occur due to other factors than those present at the time measurements were made.

2010 COPY 04.0190444.01 – HDR NORTH HERO – GRAND ISLE NHF 028-1.GPJ VERMONT AOT.GDT 8/31/16

PRELIMINARY PLANS

PROJECT NAME: NORTH HERO GRAND ISLE BRIDGE
PROJECT NUMBER: BHF 028-1(26)

FILE NAME: z12b142boring8.dgn
PROJECT LEADER: T. FRENCH
DESIGNED BY: D LAMOTHE
BORING LOG SHEET 8

PLOT DATE: 10/7/2016
DRAWN BY: P LEFEBVRE
CHECKED BY: D LAMOTHE
SHEET 19 OF 172

STATE OF VERMONT
AGENCY OF TRANSPORTATION
MATERIALS & RESEARCH SECTION
SUBSURFACE INFORMATION

BORING LOG

North Hero – Grand Isle
BHF 028-1(26)
Bridge No. 8, U.S. Route 2

Boring No.: GZ-201
Page No.: 1 of 1
Pin No.:
Checked By: MA

Boring Crew: B. Enos (NEBC), L. Williams (GZA)
Date Started: 6/30/16 Date Finished: 6/30/16
VTSPG NAD83: N 827075.00 ft E 1435249.00 ft
Station: 518+34.00 Offset: 45 L
Ground Elevation: 94.8 ft

	Casing	Sampler
Type:	WASH BORE	SS
I.D.:	4 in	1.38 in
Hammer Wt:	300 lb.	140 lb.
Hammer Fall:	24 in.	30 in.
Hammer/Rod Type:	Manual/AWJ	
Rig:	CME 45C BARGE	CE = 1.0

Groundwater Observations

Date	Depth (ft)	Notes

PIER I
BTM OF FOOTING
EL = 83.00

PIER I
BTM OF TREMIE
EL = 71.4

Depth (ft)	Strata (1)	CLASSIFICATION OF MATERIALS (Description)	Run (Dip deg.)	Core Rec. % (RQD %)	Drill Rate minutes/ft	Blows/6" (N Value)	Moisture Content %	Gravel %	Sand %	Fines %
		0.0 ft – 8.5 ft, WATER Ground elevation shown is top of water elevation at time of boring.								
5										
10		Visual Description, (Modified Burmister), S-1 (8.5–10.5'): Loose, black, GRAVEL (weathered rock fragments), trace fine Sand, trace Silt. Wet, Rec. = 0.8 ft				3-2-4-7 (6)				
15		Visual Description, (Modified Burmister), S-2 (13.8–15.8'): Very loose, gray, SILT, some fine Sand, trace Organics. Wet, Rec. = 1.3 ft				1-1-0-1 (1)				
20		Visual Description, (Modified Burmister), S-3 (18.8–20.8'): Very loose, gray, SILT, some fine Sand, trace Organics, trace Gravel. Wet, Rec. = 1.9 ft				WOH-1-1-1 (2)				
		Note:, Drill action and cuttings indicate possible Glacial Till from approximately 20.8 to 22.8 feet below water								
		22.8 ft – 23.4 ft, WEATHERED BEDROCK								
25		23.4 ft – 28.4 ft, C-1: Hard, fresh to slightly weathered, fine-grained, gray, SHALE; moderately fractured, fractures are horizontal to slightly dipping, close to moderate, rough to smooth, undulating.	C-1	95 (63)	1 1 1 1 2					
30		28.4 ft – 33.4 ft, C-2: Hard, fresh, fine-grained, gray, SHALE; moderately fractured, fractures are horizontal to moderately dipping, close, rough to smooth, planar.	C-2	98 (95)	2 1 2 2 2					
		Hole stopped @ 33.4 ft								

Notes:
1. Stratification lines represent approximate boundary between material types. Transition may be gradual.
2. N Values have not been corrected for hammer energy. CE is the hammer energy correction factor.
3. Water level readings have been made at times and under conditions stated. Fluctuations may occur due to other factors than those present at the time measurements were made.

2010 COPY 04.0190044.01 – HDR NORTH HERO – GRAND ISLE NHF 028-1(26) VERMONT A07.GDT 8/31/16

STATE OF VERMONT
AGENCY OF TRANSPORTATION
MATERIALS & RESEARCH SECTION
SUBSURFACE INFORMATION

BORING LOG

North Hero – Grand Isle
BHF 028-1(26)
Bridge No. 8, U.S. Route 2

Boring No.: GZ-202
Page No.: 1 of 1
Pin No.:
Checked By: MA

Boring Crew: B. Enos (NEBC), L. Williams (GZA)
Date Started: 6/29/16 Date Finished: 6/29/16
VTSPG NAD83: N 827017.00 ft E 1435188.00 ft
Station: 518+37.00 Offset: 39 R
Ground Elevation: 94.8 ft

	Casing	Sampler
Type:	WASH BORE	SS
I.D.:	4 in	1.38 in
Hammer Wt:	300 lb.	140 lb.
Hammer Fall:	24 in.	30 in.
Hammer/Rod Type:	Manual/AWJ	
Rig:	CME 45C BARGE	CE = 1.0

Groundwater Observations

Date	Depth (ft)	Notes

PIER I
BTM OF FOOTING
EL = 83.00

PIER I
BTM OF TREMIE
EL = 71.9

Depth (ft)	Strata (1)	CLASSIFICATION OF MATERIALS (Description)	Run (Dip deg.)	Core Rec. % (RQD %)	Drill Rate minutes/ft	Blows/6" (N Value)	Moisture Content %	Gravel %	Sand %	Fines %
		0.0 ft – 11.5 ft, WATER Ground elevation shown is top of water elevation at time of boring.								
5										
10		Visual Description, S-1 (11.5–13.5'): No recovery, Rec. = 0.0 ft				10-2-2-2 (4)				
15		Visual Description, (Modified Burmister), S-2 (16.5–18.5'): Dense, gray, SILT, some fine to medium Sand, little Gravel. Wet, GLACIAL TILL Rec. = 0.87 ft				20-16-18-21 (34)				
20		Visual Description, (Modified Burmister), S-3 (21.5–22.6'): Very dense, gray, SILT, some fine Sand, some Gravel. Wet, Rec. = 1.0 ft, GLACIAL TILL				14-43-50/1"				
		22.6 ft – 22.9 ft, WEATHERED BEDROCK	C-1	91 (70)	1					
25		22.9 ft – 27.9 ft, C-1: Hard, fresh to slightly weathered, fine-grained, gray, SHALE; moderately fractured, fractures are horizontal to slightly dipping, close to moderate, rough to smooth, undulating.			2 1 2 2					
30		27.9 ft – 32.9 ft, C-2: Hard, fresh, fine-grained, gray, SHALE; moderately fractured, fractures are horizontal to slightly dipping, close, rough to smooth, planar.	C-2	98 (90)	1 1 2 2 2					
		Hole stopped @ 32.9 ft								

Notes:
1. Stratification lines represent approximate boundary between material types. Transition may be gradual.
2. N Values have not been corrected for hammer energy. CE is the hammer energy correction factor.
3. Water level readings have been made at times and under conditions stated. Fluctuations may occur due to other factors than those present at the time measurements were made.

2010 COPY 04.0190044.01 – HDR NORTH HERO – GRAND ISLE NHF 028-1(26) VERMONT A07.GDT 8/31/16

PRELIMINARY PLANS

PROJECT NAME: NORTH HERO GRAND ISLE BRIDGE
PROJECT NUMBER: BHF 028-1(26)

FILE NAME: z12b142boring9.dgn
PROJECT LEADER: T. FRENCH
DESIGNED BY: D LAMOTHE
BORING LOG SHEET 9

PLOT DATE: 10/7/2016
DRAWN BY: P LEFEBVRE
CHECKED BY: D LAMOTHE
SHEET 20 OF 172

STATE OF VERMONT
AGENCY OF TRANSPORTATION
MATERIALS & RESEARCH SECTION
SUBSURFACE INFORMATION

BORING LOG

North Hero – Grand Isle
BHF 028-1(26)
Bridge No. 8, U.S. Route 2

Boring No.: GZ-203
Page No.: 1 of 1
Pin No.:
Checked By: MA

Boring Crew: B. Enos (NEBC), L. Williams (GZA)
Date Started: 6/30/16 Date Finished: 6/30/16
VTSPG NAD83: N 826982.00 ft E 1435328.00 ft
Station: 519+56.00 Offset: 44 L
Ground Elevation: 94.8 ft

	Casing	Sampler
Type:	WASH BORE	SS
I.D.:	4 in	1.38 in
Hammer Wt:	300 lb.	140 lb.
Hammer Fall:	24 in.	30 in.
Hammer/Rod Type:	Manual/AWJ	
Rig:	CME 45C BARGE	CE = 1.0

Groundwater Observations

Date	Depth (ft)	Notes

PIER 2
BTM OF FOOTING
EL = 84.50

PIER 2
BTM OF TREMIE
EL = 74.5

Depth (ft)	Strata (1)	CLASSIFICATION OF MATERIALS (Description)	Run (Dip deg.)	Core Rec., % (RQD %)	Drill Rate minutes/ft	Blows/6" (N Value)	Moisture Content %	Gravel %	Sand %	Fines %
		0.0 ft – 7.0 ft, WATER Ground elevation shown is top of water elevation at time of boring.								
5										
		Visual Description, (Modified Burmister), S-1 (7–9'): Loose, brown, GRAVEL, trace Silt, trace fine Sand. Wet Rec. = 0.5 ft				4-3-4- 7 (7)				
10										
		Visual Description, S-2 (12–14'): No recovery, Rec. = 0.0 ft				5-4-3- 1 (7)				
15										
		Visual Description, (Modified Burmister), S-3 (17–18.2'): Hard, gray, Clayey SILT, some fine Sand, little Gravel. Wet, Rec. = 1.25 ft				4-2- 50/2"				
		19.0 ft – 20.3 ft, WEATHERED BEDROCK								
20		20.3 ft – 25.3 ft, C-1: Hard, fresh to slightly weathered, fine-grained, gray, SHALE; moderately fractured, fractures are horizontal to slightly dipping, close to moderate, rough to smooth, undulating.	C-1	91 (76)	3 2 2 2 2					
25		25.3 ft – 30.3 ft, C-2: Hard, fresh, fine-grained, gray, SHALE; slightly fractured, fractures are horizontal to slightly dipping, close, rough to smooth, planar.	C-2	100 (99)	2 1 2 2 2					
30		Hole stopped @ 30.3 ft								

Notes:
1. Stratification lines represent approximate boundary between material types. Transition may be gradual.
2. N Values have not been corrected for hammer energy. CE is the hammer energy correction factor.
3. Water level readings have been made at times and under conditions stated. Fluctuations may occur due to other factors than those present at the time measurements were made.

STATE OF VERMONT
AGENCY OF TRANSPORTATION
MATERIALS & RESEARCH SECTION
SUBSURFACE INFORMATION

BORING LOG

North Hero – Grand Isle
BHF 028-1(26)
Bridge No. 8, U.S. Route 2

Boring No.: GZ-204
Page No.: 1 of 1
Pin No.:
Checked By: MA

Boring Crew: B. Enos (NEBC), L. Williams (GZA)
Date Started: 6/29/16 Date Finished: 6/29/16
VTSPG NAD83: N 826926.00 ft E 1435269.00 ft
Station: 519+59.00 Offset: 37 R
Ground Elevation: 94.8 ft

	Casing	Sampler
Type:	WASH BORE	SS
I.D.:	4 in	1.38 in
Hammer Wt:	300 lb.	140 lb.
Hammer Fall:	24 in.	30 in.
Hammer/Rod Type:	Manual/AWJ	
Rig:	CME 45C BARGE	CE = 1.0

Groundwater Observations

Date	Depth (ft)	Notes

PIER 2
BTM OF FOOTING
EL = 84.50

PIER 2
BTM OF TREMIE
EL = 74.0

Depth (ft)	Strata (1)	CLASSIFICATION OF MATERIALS (Description)	Run (Dip deg.)	Core Rec., % (RQD %)	Drill Rate minutes/ft	Blows/6" (N Value)	Moisture Content %	Gravel %	Sand %	Fines %
		0.0 ft – 9.5 ft, WATER Ground elevation shown is top of water elevation at time of boring.								
5										
10		Visual Description, (Modified Burmister), S-1 (9.5–11.5'): Loose, gray, GRAVEL, some Silt, little fine Sand, trace Organics. Wet, Rec. = 0.58 ft				2-2-6- 2 (8)				
15		Visual Description, (Modified Burmister), S-2 (14.5–16.5'): Very soft, gray, Clayey SILT, some fine Sand, trace Gravel. Wet, Rec. = 1.83 ft				3- WOH/18"				
20		Visual Description, (Modified Burmister), S-3 (19.5–19.8'): Hard, gray, Clayey SILT, some fine Sand, little Gravel. Wet, Rec. = 0.25 ft				50/3"				
		19.8 ft – 20.8 ft, WEATHERED BEDROCK	C-1	93 (68)	2					
		20.8 ft – 25.8 ft, C-1: Hard, fresh to slightly weathered, fine-grained, gray, SHALE; moderately fractured, fractures are horizontal to moderately dipping, close to moderate, rough to smooth, undulating.			1 2 1 2					
25		25.8 ft – 30.8 ft, C-2: Hard, fresh, fine-grained, gray, SHALE; moderately fractured, fractures are horizontal to slightly dipping, close, rough to smooth, planar.	C-2	98 (83)	2 2 2 2 2					
30		Hole stopped @ 30.8 ft								

Notes:
1. Stratification lines represent approximate boundary between material types. Transition may be gradual.
2. N Values have not been corrected for hammer energy. CE is the hammer energy correction factor.
3. Water level readings have been made at times and under conditions stated. Fluctuations may occur due to other factors than those present at the time measurements were made.

2010 COPY 04.0180044.01 - HDR NORTH HERO - GRAND ISLE BHF 028-1.GPJ VERMONT AUTOCIT 8/31/16

PRELIMINARY PLANS

PROJECT NAME: NORTH HERO GRAND ISLE BRIDGE
PROJECT NUMBER: BHF 028-1(26)

FILE NAME: z12b142boring10.dgn
PROJECT LEADER: T. FRENCH
DESIGNED BY: D LAMOTHE
BORING LOG SHEET 10

PLOT DATE: 10/7/2016
DRAWN BY: P LEFEBVRE
CHECKED BY: D LAMOTHE
SHEET 21 OF 172

REMOVAL OF EXISTING PAVEMENT MARKINGS
STA 512+07.00 "S.I.G.N.A.L" RT

DURABLE LETTER OR SYMBOL, POLYUREA
STA 512+07.00 RT, "S.I.G.N.A.L" (6 EA)

REMOVING SIGNS
AS SHOWN - 3

FLASHING BEACON, GROUND MOUNTED
STA 509+91.0 RT (1EA)

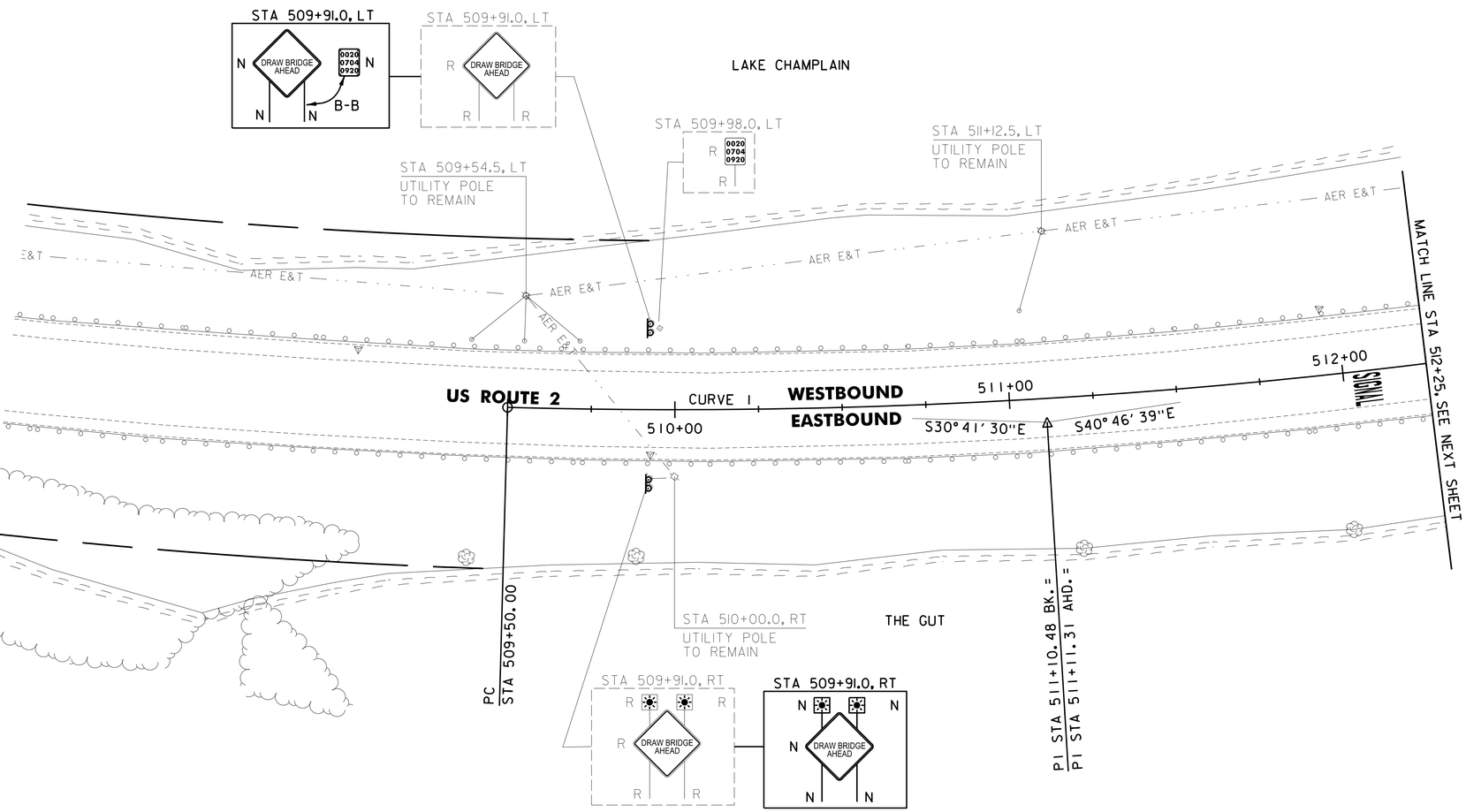

CURVE 1
DELTA = 10° 05' 10" LT
D = 3° 08' 04"
R = 1828.00'
T = 161.31'
L = 321.79'
E = 7.10'

SIGN LEGEND
R = REMOVE
S = SALVAGE
N = NEW
RET = RETAIN
B-B = BACK TO BACK
EXISTING = — — — — —
NEW = ————

SCALE 1" = 20'-0"
20 0 20

CHA

PROJECT NAME: NORTH HERO GRAND ISLE BRIDGE	
PROJECT NUMBER: BHF 028-1(26)	
FILE NAME: z12b142bdr.dgn	PLOT DATE: 10/7/2016
PROJECT LEADER: D. GOZALKOWSKI	DRAWN BY: A. KIRBY
DESIGNED BY: J. PARRELLI	CHECKED BY: J. SHIELDS
ROADWAY LAYOUT SHEET 1	SHEET 22 OF 172

FILE NAME = V:\Projects\ANY\K3\28173\CADD_MSTN\12b142\Consultants\z12b142bdr.dgn
DATE/TIME = 10/7/2016
USER = 3724

STEEL BEAM GUARDRAIL, GALVANIZED
STA 513+97.7 - STA 516+50.0 LT
STA 513+97.7 - STA 516+50.0 RT

REMOVAL AND DISPOSAL OF GUARDRAIL
STA 513+98.7 - STA 516+50.0 LT
STA 513+98.7 - STA 516+50.0 RT

DURABLE 24 INCH STOP BAR, POLYUREA AND TEMPORARY 24 INCH STOP BAR, PAINT
STA 515+50.00 RT

DURABLE 4 INCH WHITE LINE, POLYUREA AND TEMPORARY 4 INCH WHITE LINE, PAINT
(ALL LINES WILL INCLUDE EDGE LINE BREAKS AND RADIUS FOR TOWN HIGHWAYS)
STA 514+00.00 - STA 516+50.00 EDGE LINE LT & RT

DURABLE 4 INCH YELLOW LINE, POLYUREA AND TEMPORARY 4 INCH YELLOW LINE, PAINT
(ALL LINES WILL INCLUDE C/L BREAKS FOR TOWN HIGHWAYS)
S = SOLID, D = DASHED LT ℄ RT
STA 514+00.00 - STA 516+50.00 S - S

REMOVAL OF EXISTING PAVEMENT MARKINGS
STA 512+47.00 "A,H,E,A,D" RT

DURABLE LETTER OR SYMBOL, POLYUREA
STA 512+47.00 RT, "A,H,E,A,D" (5 EA)

STONE FILL, TYPE IV
STA 514+55.0 - STA 516+50.0 LT
STA 514+55.0 - STA 516+50.0 RT

REMOVING SIGNS
AS SHOWN - 3

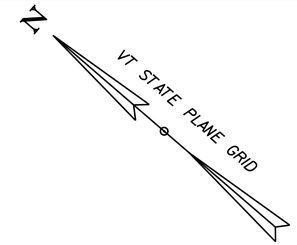

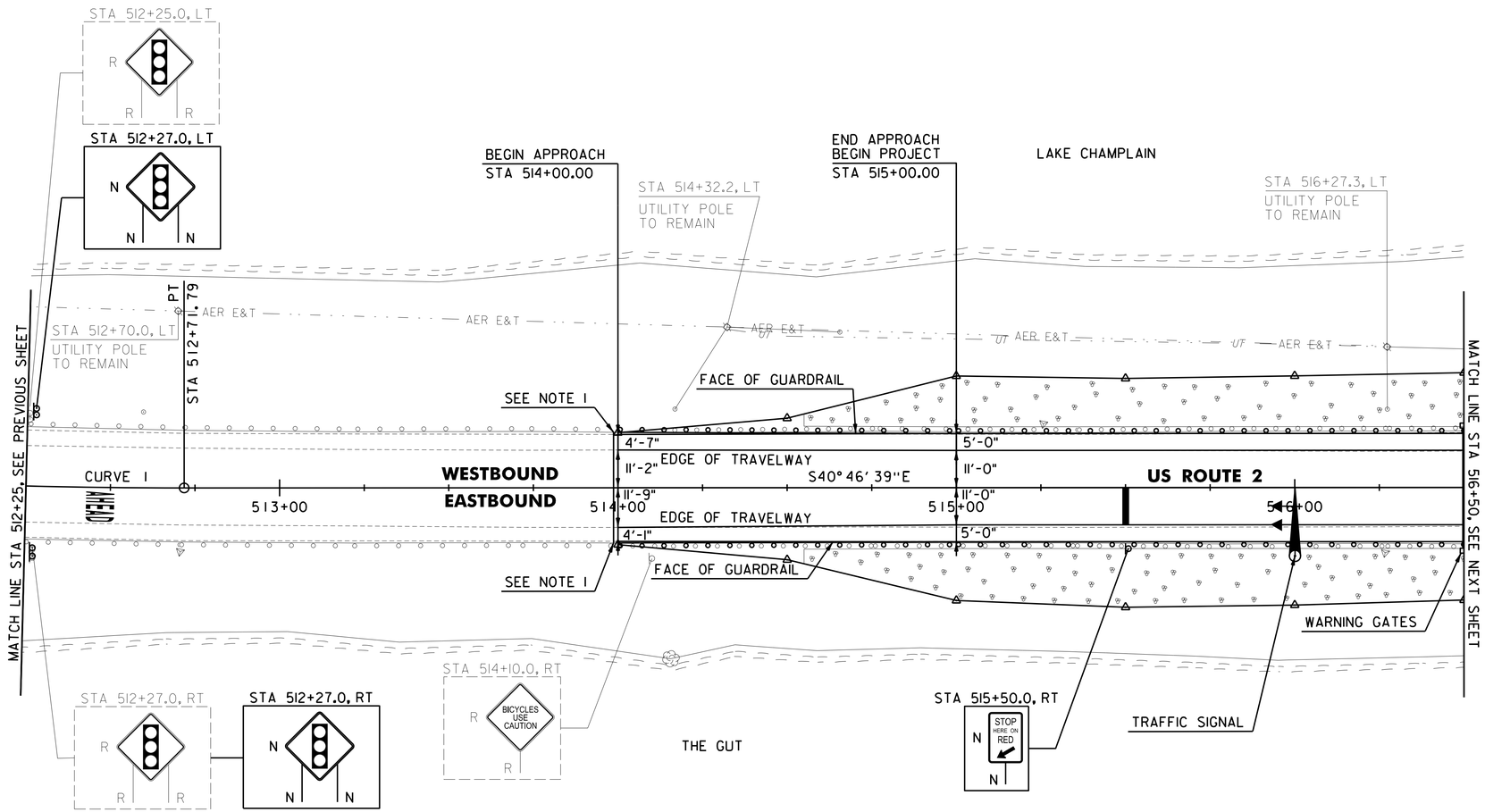

CURVE 1
DELTA = 10° 05' 10" LT
D = 3° 08' 04"
R = 1828.00'
T = 161.31'
L = 321.79'
E = 7.10'

SIGN LEGEND
R = REMOVE
S = SALVAGE
N = NEW
RET = RETAIN
B-B = BACK TO BACK
EXISTING = — — — — —
NEW = ————

SCALE 1" = 20'-0"
20 0 20

NOTE:

1. THE CONTRACTOR SHALL SPLICE THE EXISTING GUARDRAIL AND CONNECT PROPOSED GUARDRAIL TO REMAINING EXISTING GUARDRAIL.

PROJECT NAME: NORTH HERO GRAND ISLE BRIDGE	
PROJECT NUMBER: BHF 028-1(26)	
FILE NAME: z12b142bdr.dgn	PLOT DATE: 10/7/2016
PROJECT LEADER: D. GOZALKOWSKI	DRAWN BY: A. KIRBY
DESIGNED BY: J. PARRELLI	CHECKED BY: J. SHIELDS
ROADWAY LAYOUT SHEET 2	SHEET 23 OF 172

FILE NAME = V:\Projects\ANY\K3\28173\CADD_MSTN\12b142\Consultants\z12b142bdr.dgn
DATE/TIME = 10/7/2016
USER = 3724

STEEL BEAM GUARDRAIL, GALVANIZED
STA 516+50.0 - STA 517+35.2 LT
STA 516+50.0 - STA 517+35.2 RT
STA 520+64.8 - STA 521+15.9 LT
STA 520+64.8 - STA 522+25.0 RT
STA 521+14.5 - STA 522+25.0 LT

REMOVAL AND DISPOSAL OF GUARDRAIL
STA 516+50.0 - STA 517+69.8 LT
STA 516+50.0 - STA 517+69.8 RT
STA 520+29.9 - STA 522+25.0 RT
STA 520+30.1 - STA 520+63.5 LT
STA 521+15.8 - STA 522+25.0 LT

ANCHOR FOR STEEL BEAM RAIL
STA 521+07.6 LT
STA 521+22.8 LT

DELINEATOR WITH STEEL POST
STA 521+14.5 LT
STA 521+15.9 LT

DURABLE 4 INCH WHITE LINE, POLYUREA AND TEMPORARY 4 INCH WHITE LINE, PAINT
(ALL LINES WILL INCLUDE EDGE LINE BREAKS AND RADIUS FOR TOWN HIGHWAYS)
STA 516+50.00 - STA 522+25.00 EDGE LINE LT & RT
STA 521+10.00 - STA 521+50.00 PARKING SPACE EDGE LINES LT

DURABLE 4 INCH YELLOW LINE, POLYUREA AND TEMPORARY 4 INCH YELLOW LINE, PAINT
(ALL LINES WILL INCLUDE C/L BREAKS FOR TOWN HIGHWAYS)
S = SOLID, D = DASHED LT ℄ RT
STA 516+50.00 - STA 522+25.00 S - S

6 INCH UNDERDRAIN PIPE
STA 520+50.0 - STA 521+31.5 LT

6 INCH UNDERDRAIN CARRIER PIPE
STA 521+31.5 - STA 521+38.9 LT

UNDERDRAIN FLUSHING BASIN
STA 520+50.0 LT

GEOTEXTILE FOR UNDERDRAIN TRENCH LINING
STA 520+50.0 - STA 521+31.5 LT

STONE FILL, TYPE IV
STA 516+50.0 - STA 517+70.4 LT
STA 516+50.0 - STA 517+70.4 RT
STA 520+29.6 - STA 522+25.0 RT
STA 521+10.0 - STA 522+25.0 LT

REMOVING SIGNS
AS SHOWN - 6

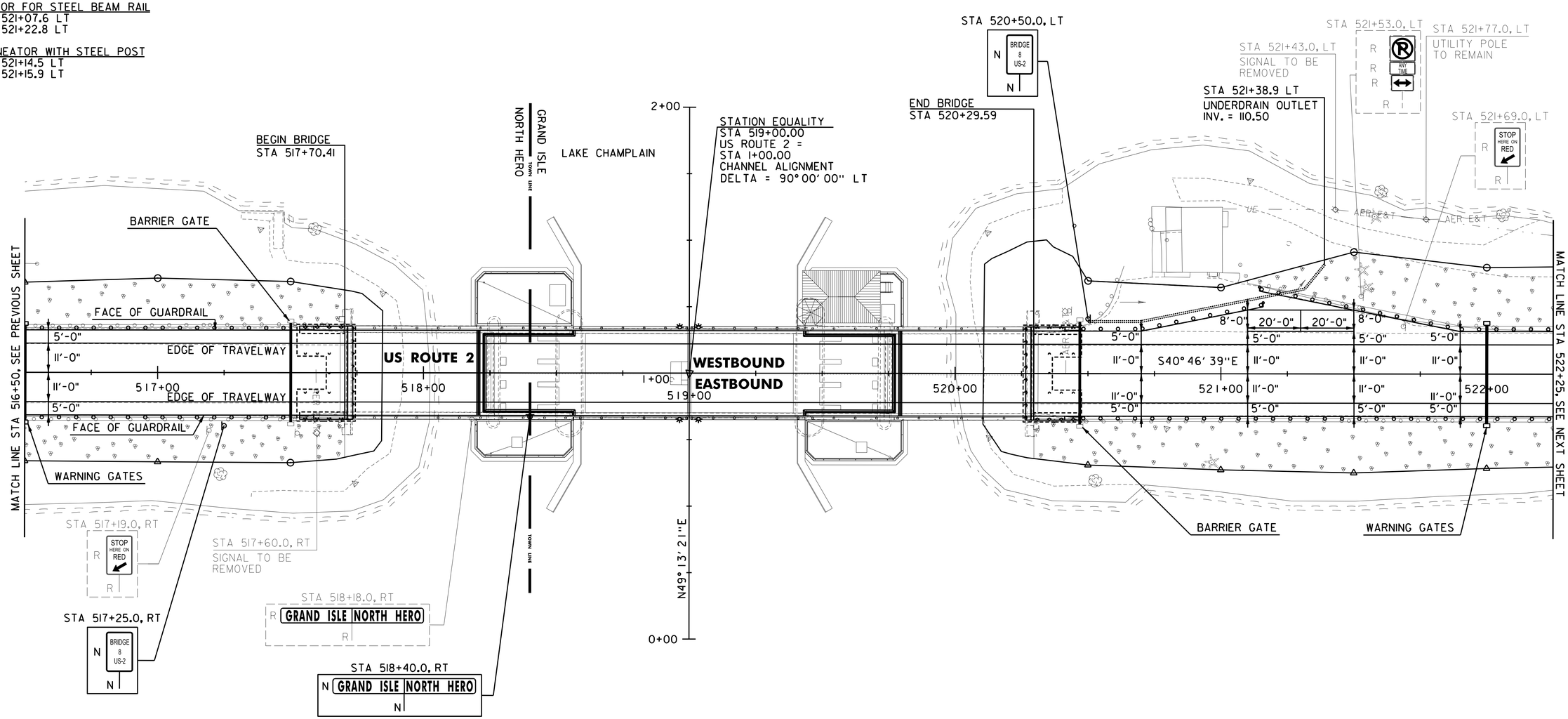

SIGN LEGEND
R = REMOVE
S = SALVAGE
N = NEW
RET = RETAIN
B-B = BACK TO BACK
EXISTING = — — — — —
NEW = ————

SCALE 1" = 20'-0"
20 0 20

CHA

PROJECT NAME: NORTH HERO GRAND ISLE BRIDGE	
PROJECT NUMBER: BHF 028-1(26)	
FILE NAME: z12b142bdr.dgn	PLOT DATE: 10/7/2016
PROJECT LEADER: D. GOZALKOWSKI	DRAWN BY: A. KIRBY
DESIGNED BY: J. PARRELLI	CHECKED BY: J. SHIELDS
ROADWAY LAYOUT SHEET 3	SHEET 24 OF 172

FILE NAME = V:\Projects\ANY\K3\28173\CADD_MSTN\12b142\Consultants\z12b142bdr.dgn
DATE/TIME = 10/7/2016
USER = 3724

STEEL BEAM GUARDRAIL, GALVANIZED
STA 522+25.0 - STA 526+02.5 LT
STA 522+25.0 - STA 526+02.3 RT

REMOVAL AND DISPOSAL OF GUARDRAIL
STA 522+25.0 - STA 526+01.5 LT
STA 522+25.0 - STA 526+01.3 RT

DURABLE 4 INCH WHITE LINE, POLYUREA
AND TEMPORARY 4 INCH WHITE LINE, PAINT
(ALL LINES WILL INCLUDE EDGE LINE BREAKS AND RADIUS FOR TOWN HIGHWAYS)
STA 522+25.00 - STA 526+00.00 EDGE LINE LT & RT

DURABLE 4 INCH YELLOW LINE, POLYUREA
AND TEMPORARY 4 INCH YELLOW LINE, PAINT
(ALL LINES WILL INCLUDE C/L BREAKS FOR TOWN HIGHWAYS)
S = SOLID, D = DASHED LT ℄ RT
STA 522+25.00 - STA 526+00.00 S - S

DURABLE 24 INCH STOP BAR, POLYUREA
AND TEMPORARY 24 INCH STOP BAR, PAINT
STA 523+00.00 LT

DURABLE LETTER OR SYMBOL, POLYUREA
STA 525+51.00 LT, "A,H,E,A,D" (5 EA)
STA 525+91.00 LT, "S,I,G,N,A,L" (6 EA)

TEMPORARY LETTER OR SYMBOL, PAINT
STA 525+51.00 LT, "A,H,E,A,D" (10 EA)
STA 525+91.00 LT, "S,I,G,N,A,L" (12 EA)

REMOVING SIGNS
AS SHOWN - 3

STONE FILL, TYPE IV
STA 522+25.0 - STA 525+50.0 LT
STA 522+25.0 - STA 525+50.0 RT

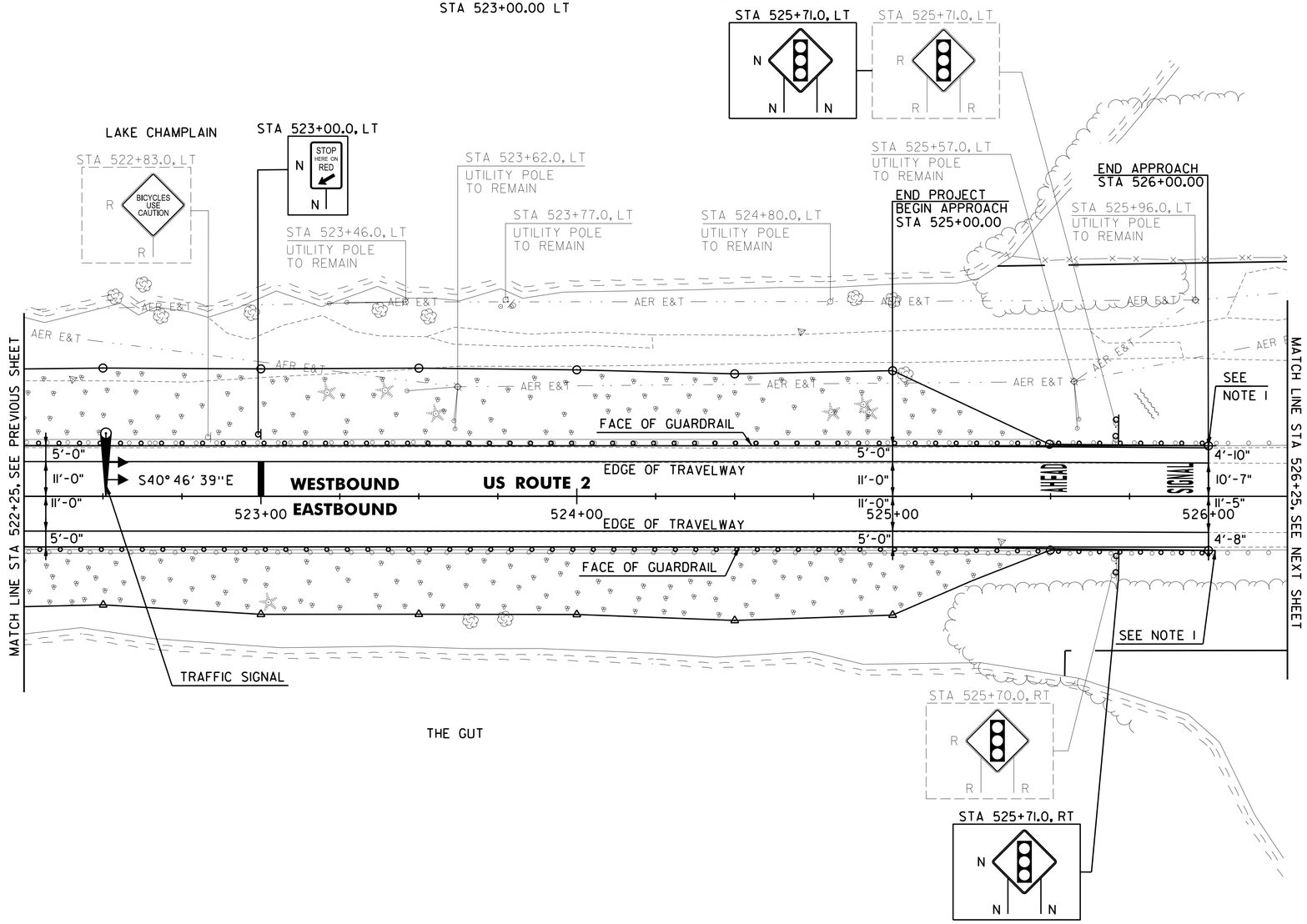

NOTE:

1. THE CONTRACTOR SHALL SPLICE THE EXISTING GUARDRAIL AND CONNECT PROPOSED GUARDRAIL TO REMAINING EXISTING GUARDRAIL.

SIGN LEGEND
R = REMOVE
S = SALVAGE
N = NEW
RET = RETAIN
B-B = BACK TO BACK
EXISTING = — — — — —
NEW = ————

SCALE 1" = 20'-0"
20 0 20

CHA

PROJECT NAME: NORTH HERO GRAND ISLE BRIDGE	
PROJECT NUMBER: BHF 028-1(26)	
FILE NAME: zl2bl42bdr.dgn	PLOT DATE: 10/7/2016
PROJECT LEADER: D. GOZALKOWSKI	DRAWN BY: A. KIRBY
DESIGNED BY: J. PARRELLI	CHECKED BY: J. SHIELDS
ROADWAY LAYOUT SHEET 4	SHEET 25 OF 172

FILE NAME = V:\Projects\ANY\K3\28173\CADD_MSTN\12bl42\Consultants\zl2bl42bdr.dgn
DATE/TIME = 10/7/2016
USER = 3724

REMOVING SIGNS
AS SHOWN - 3

FLASHING BEACON, GROUND MOUNTED
STA 528+84.0 LT (1EA)

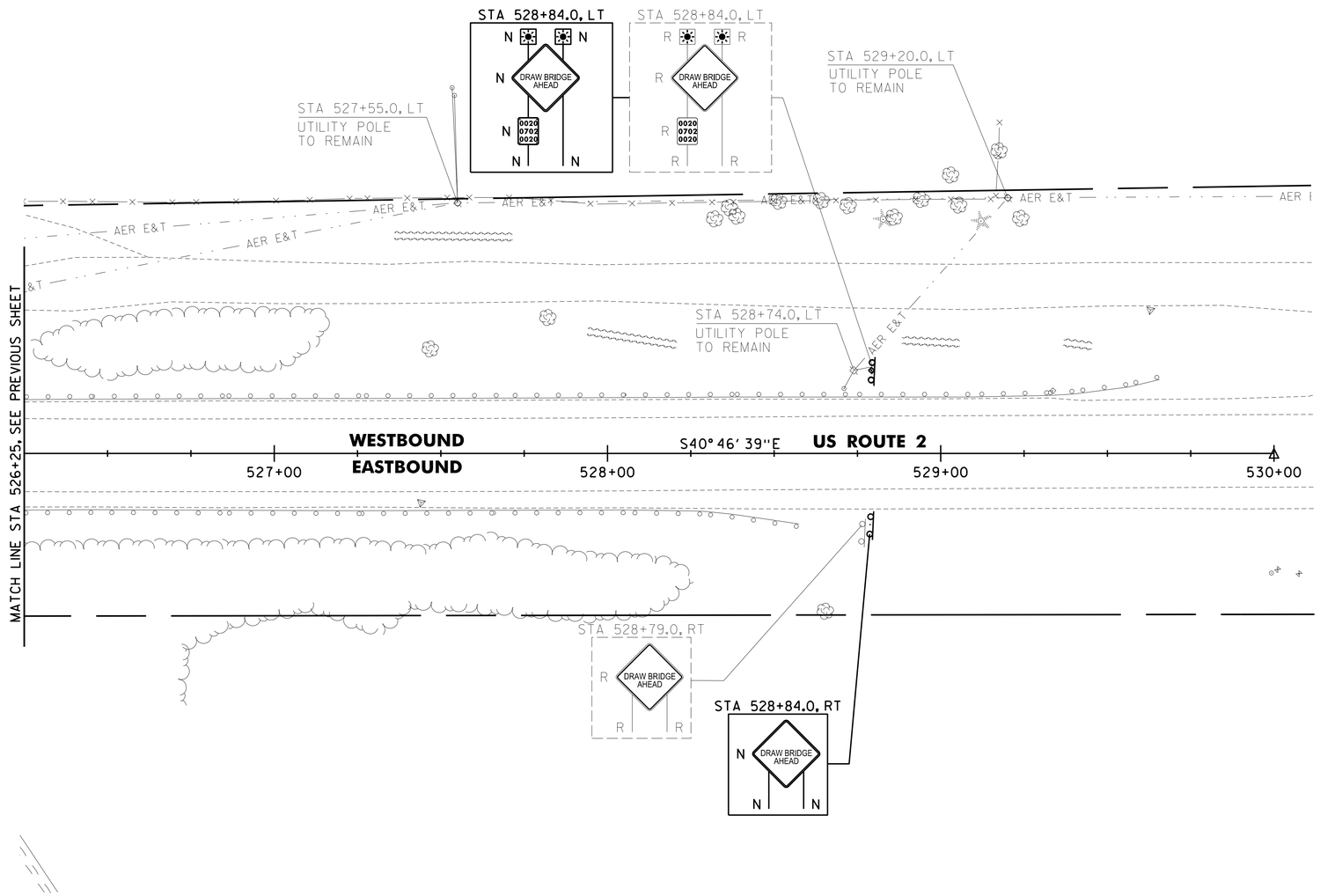

SIGN LEGEND

R = REMOVE
S = SALVAGE
N = NEW
RET = RETAIN
B-B = BACK TO BACK
EXISTING = — — — — —
NEW = ————

SCALE 1" = 20'-0"
20 0 20

CHA

PROJECT NAME: NORTH HERO GRAND ISLE BRIDGE	
PROJECT NUMBER: BHF 028-1(26)	
FILE NAME: z12b142bdr.dgn	PLOT DATE: 10/7/2016
PROJECT LEADER: D. GOZALKOWSKI	DRAWN BY: A. KIRBY
DESIGNED BY: J. PARRELLI	CHECKED BY: J. SHIELDS
ROADWAY LAYOUT SHEET 5	SHEET 26 OF 172

FILE NAME = V:\Projects\ANY\K3\28173\CADD_MSTN\12b142\Consultants\z12b142bdr.dgn
DATE/TIME = 10/7/2016
USER = 3724

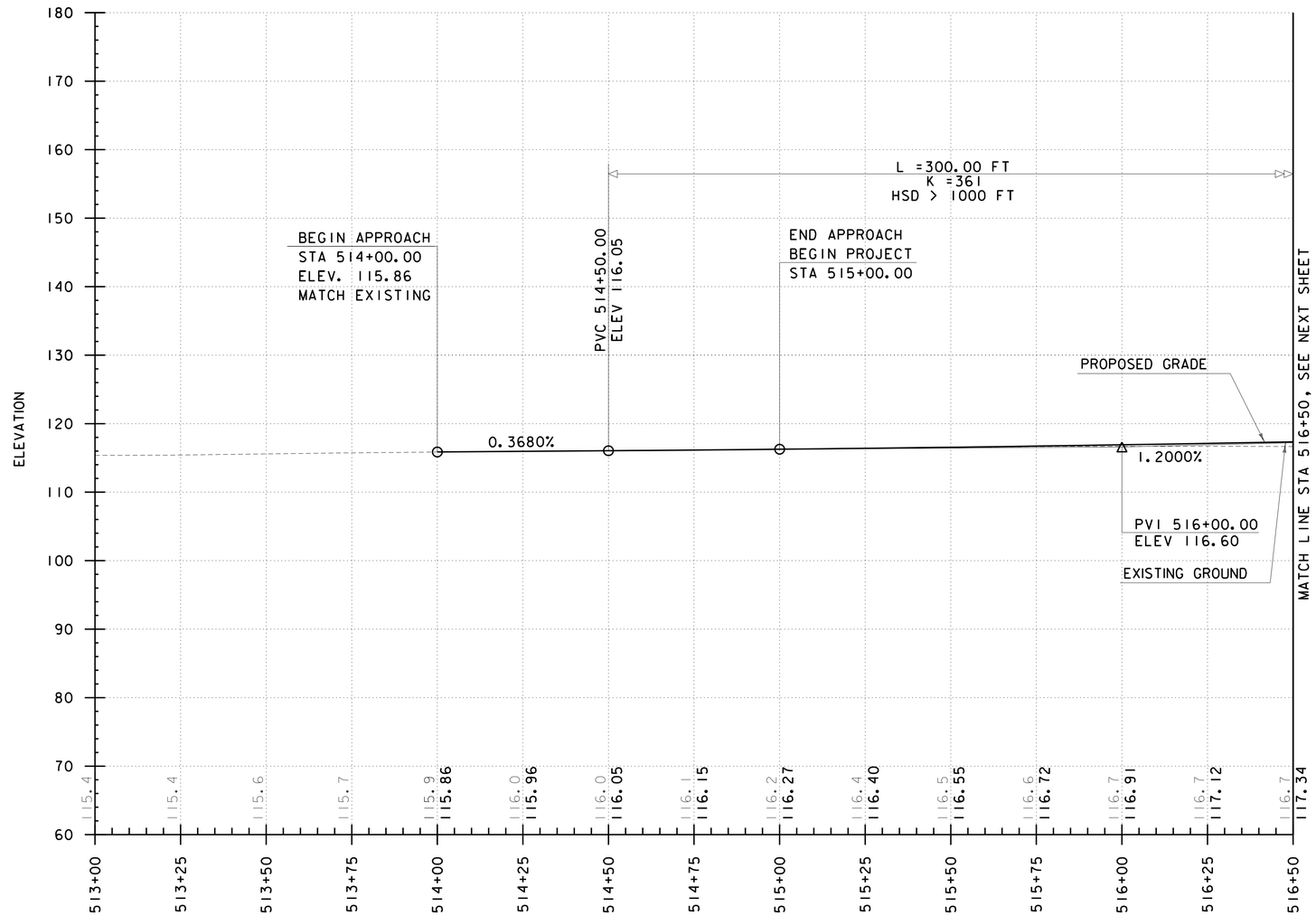

PROFILE - US ROUTE 2

SCALE: HORIZONTAL 1" = 20'
VERTICAL 1" = 10'

NOTE:

1. THE GRADES SHOWN TO THE NEAREST TENTH ARE THE EXISTING GROUND ELEVATIONS ALONG THE CENTERLINE. THE GRADES SHOWN TO THE NEAREST HUNDRETH ARE THE PROPOSED GRADES ALONG THE CENTERLINE.

PROJECT NAME: NORTH HERO GRAND ISLE BRIDGE	
PROJECT NUMBER: BHF 028-1(26)	
FILE NAME: z12b142pro.dgn	PLOT DATE: 10/7/2016
PROJECT LEADER: D. GOZALKOWSKI	DRAWN BY: A. KIRBY
DESIGNED BY: J. PARRELLI	CHECKED BY: J. SHIELDS
PROFILE SHEET 1	SHEET 27 OF 172

CHA

FILE NAME = V:\Projects\ANY\K3\28173\CADD_MSTN\12b142\Consultants\z12b142pro.dgn
DATE/TIME = 10/7/2016
USER = 3724

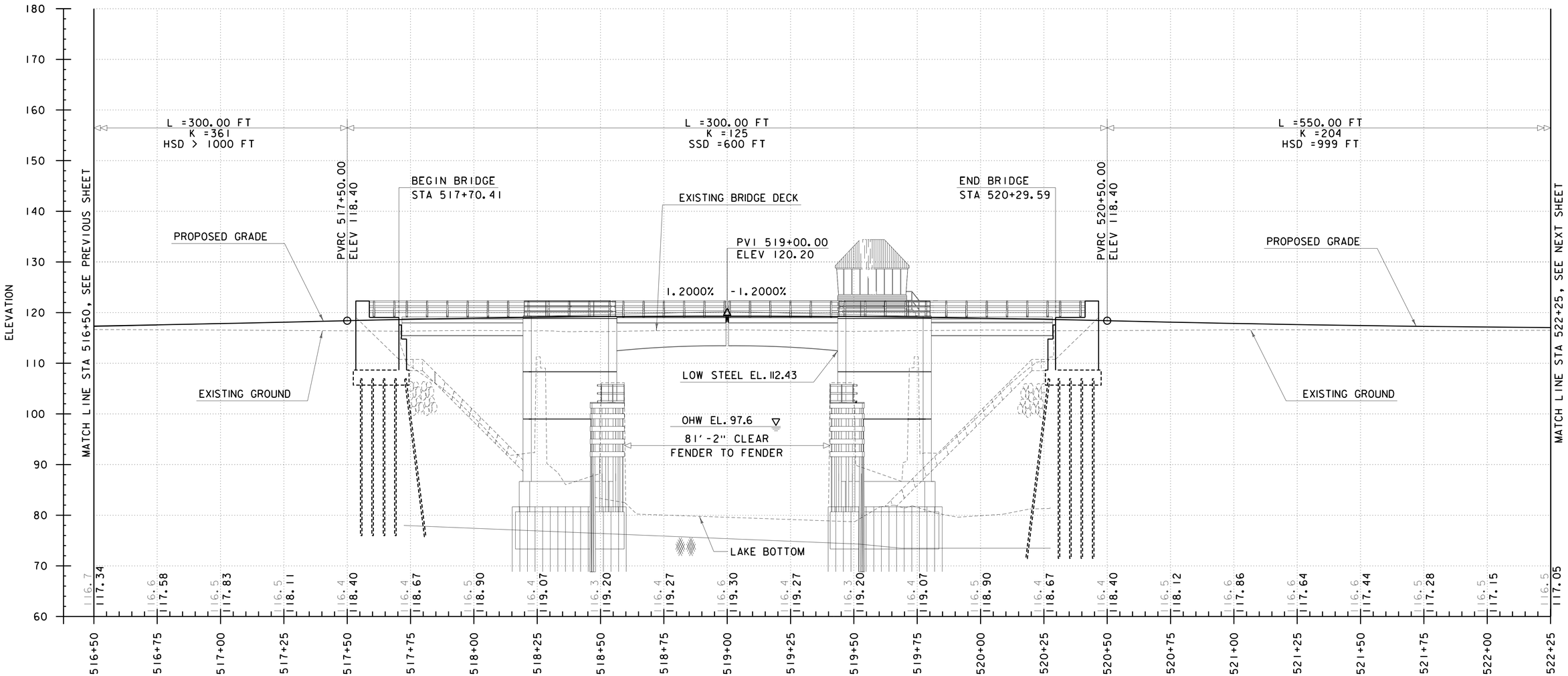

PROFILE - US ROUTE 2

SCALE: HORIZONTAL 1" = 20'
VERTICAL 1" = 10'

NOTE:

1. THE GRADES SHOWN TO THE NEAREST TENTH ARE THE EXISTING GROUND ELEVATIONS ALONG THE CENTERLINE. THE GRADES SHOWN TO THE NEAREST HUNDRETH ARE THE PROPOSED GRADES ALONG THE CENTERLINE.

PROJECT NAME: NORTH HERO GRAND ISLE BRIDGE	
PROJECT NUMBER: BHF 028-1(26)	
FILE NAME: z12b142pro.dgn	PLOT DATE: 10/7/2016
PROJECT LEADER: D. GOZALKOWSKI	DRAWN BY: A. KIRBY
DESIGNED BY: J. PARRELLI	CHECKED BY: J. SHIELDS
PROFILE SHEET 2	SHEET 28 OF 172

CHA

FILE NAME = V:\Projects\ANY\K3\28173\CADD_MSTN\12b142\Consultants\z12b142pro.dgn
DATE/TIME = 10/7/2016
USER = 3724

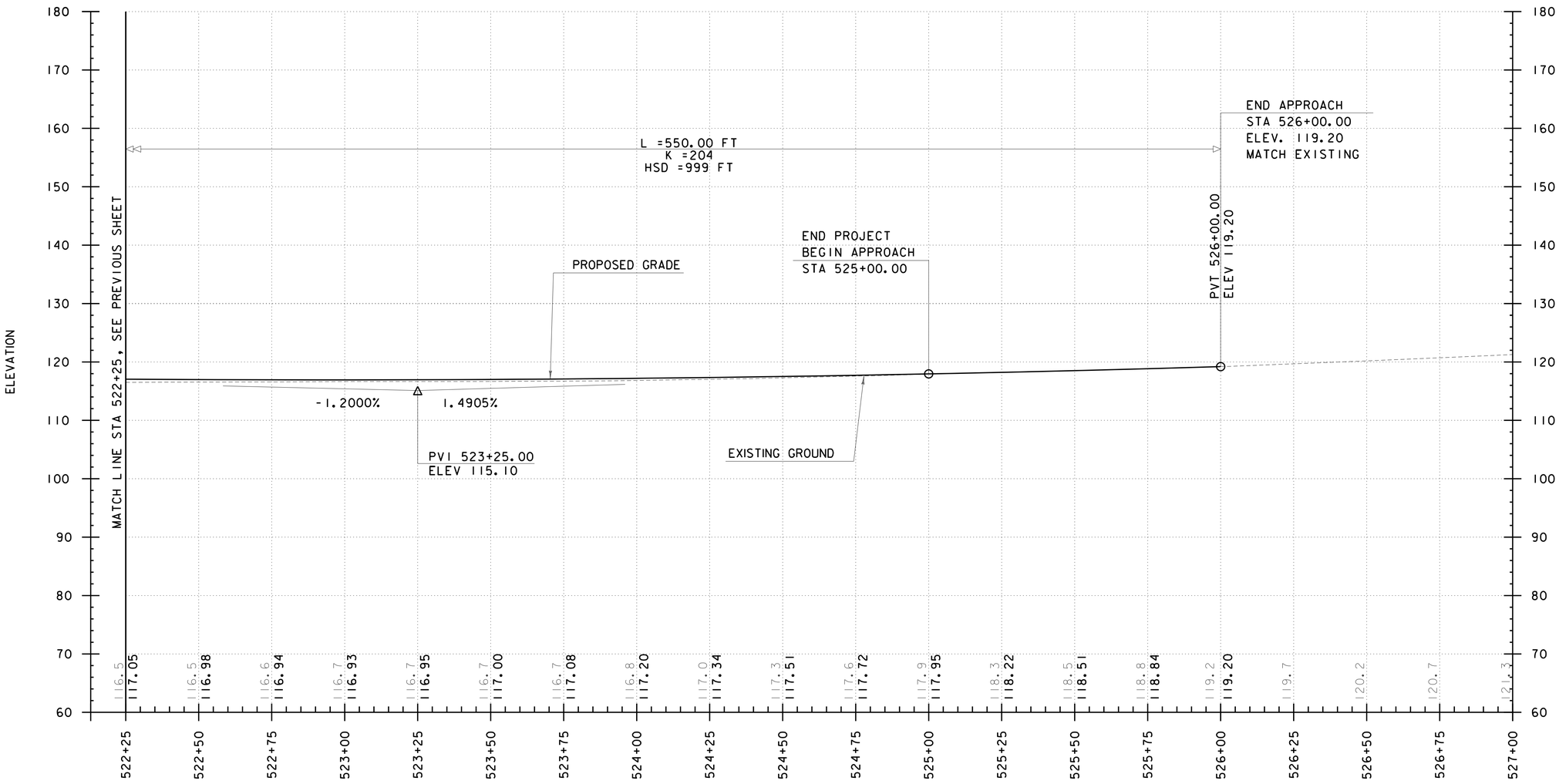

PROFILE - US ROUTE 2

SCALE: HORIZONTAL 1" = 20'
VERTICAL 1" = 10'

NOTE:

1. THE GRADES SHOWN TO THE NEAREST TENTH ARE THE EXISTING GROUND ELEVATIONS ALONG THE CENTERLINE. THE GRADES SHOWN TO THE NEAREST HUNDRETH ARE THE PROPOSED GRADES ALONG THE CENTERLINE.

FILE NAME = V:\Projects\ANY\K3\28173\CADD_MSTN\12b142\Consultants\z12b142pro.dgn
DATE/TIME = 10/7/2016
USER = 3724

CHA

PROJECT NAME: NORTH HERO GRAND ISLE BRIDGE	
PROJECT NUMBER: BHF 028-1(26)	
FILE NAME: z12b142pro.dgn	PLOT DATE: 10/7/2016
PROJECT LEADER: D. GOZALKOWSKI	DRAWN BY: A. KIRBY
DESIGNED BY: J. PARRELLI	CHECKED BY: J. SHIELDS
PROFILE SHEET 3	SHEET 29 OF 172

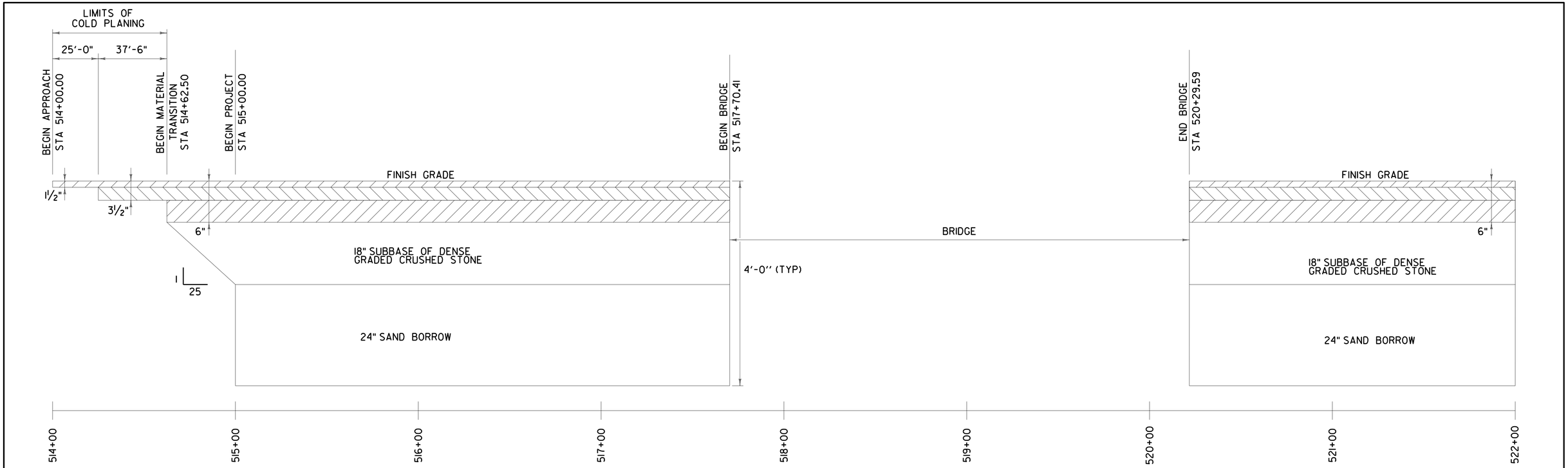

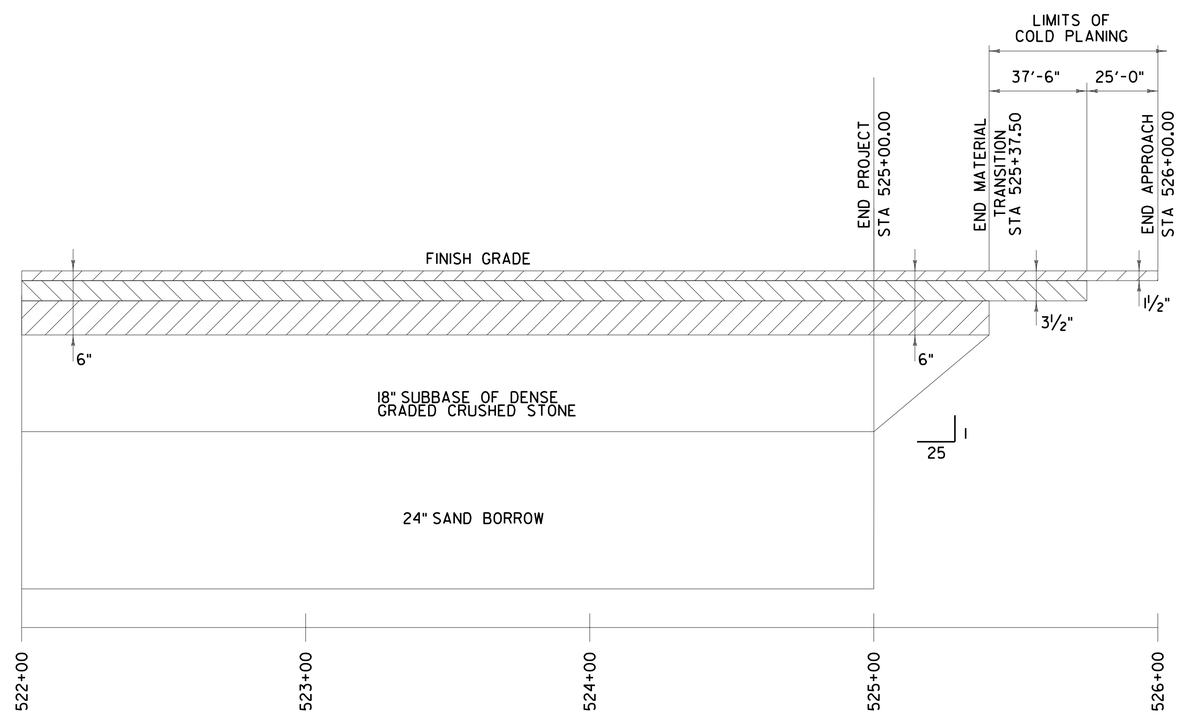

NOT TO SCALE

US ROUTE 2 MATERIAL TRANSITION DIAGRAM

CHA

PROJECT NAME: NORTH HERO GRAND ISLE BRIDGE	
PROJECT NUMBER: BHF 028-1(26)	
FILE NAME: z12b142mts.dgn	PLOT DATE: 10/7/2016
PROJECT LEADER: D. GOZALKOWSKI	DRAWN BY: M. TAYLOR
DESIGNED BY: J. PARRELLI	CHECKED BY: J. SHIELDS
MATERIAL TRANSITION DETAIL SHEET	SHEET 30 OF 172

FILE NAME = V:\Projects\ANY\K3\28173\CADD_MSTN\12b142\Consultants\z12b142mts.dgn
DATE/TIME = 10/7/2016
USER = 3724

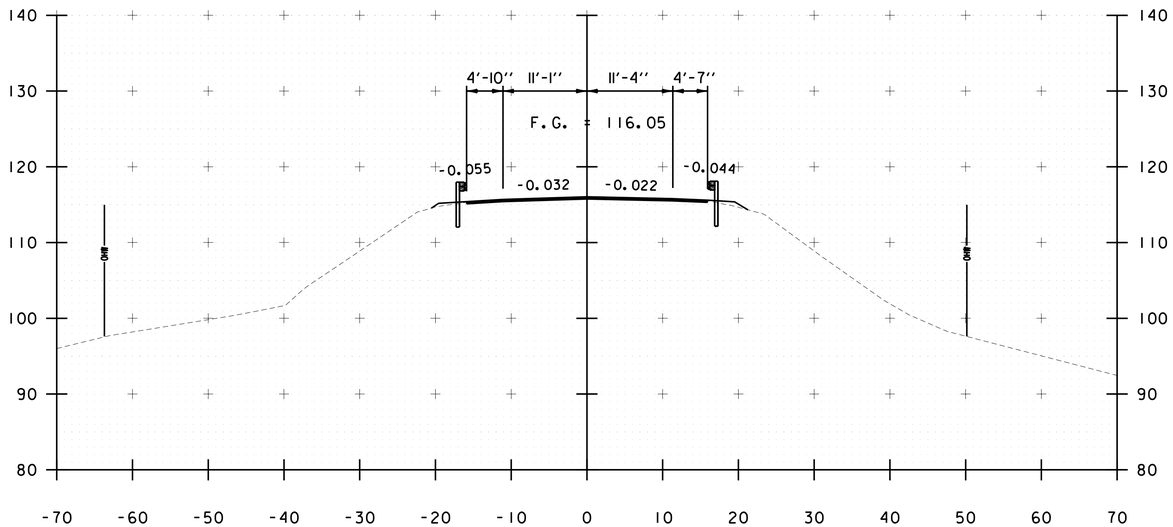

514+50

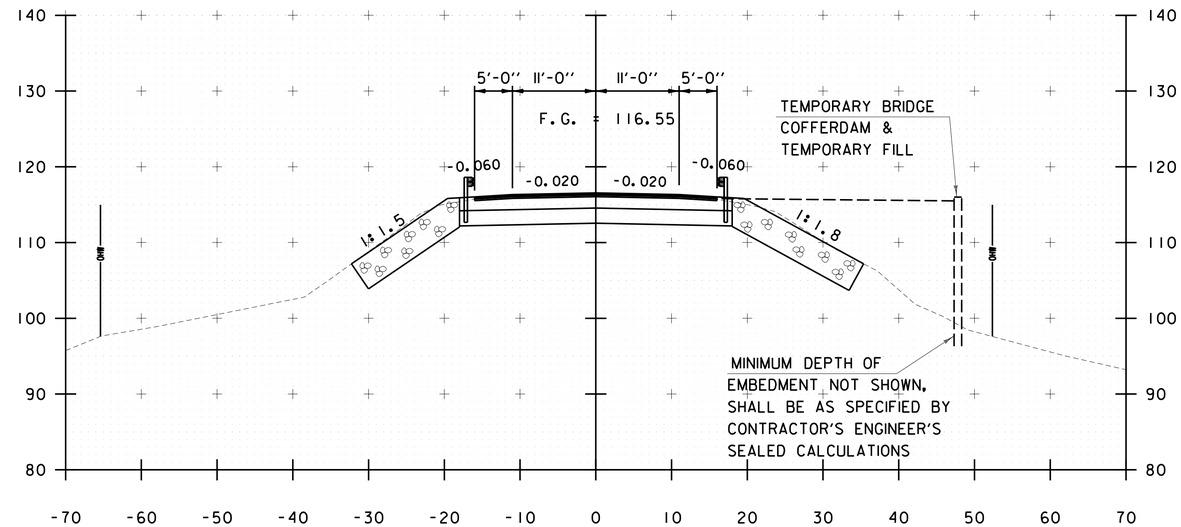

515+50

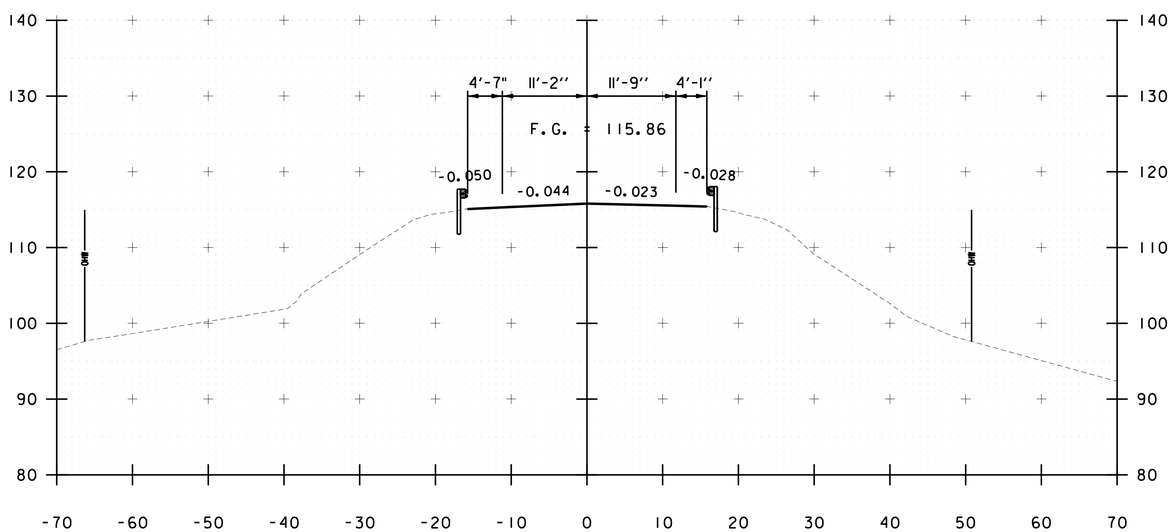

514+00

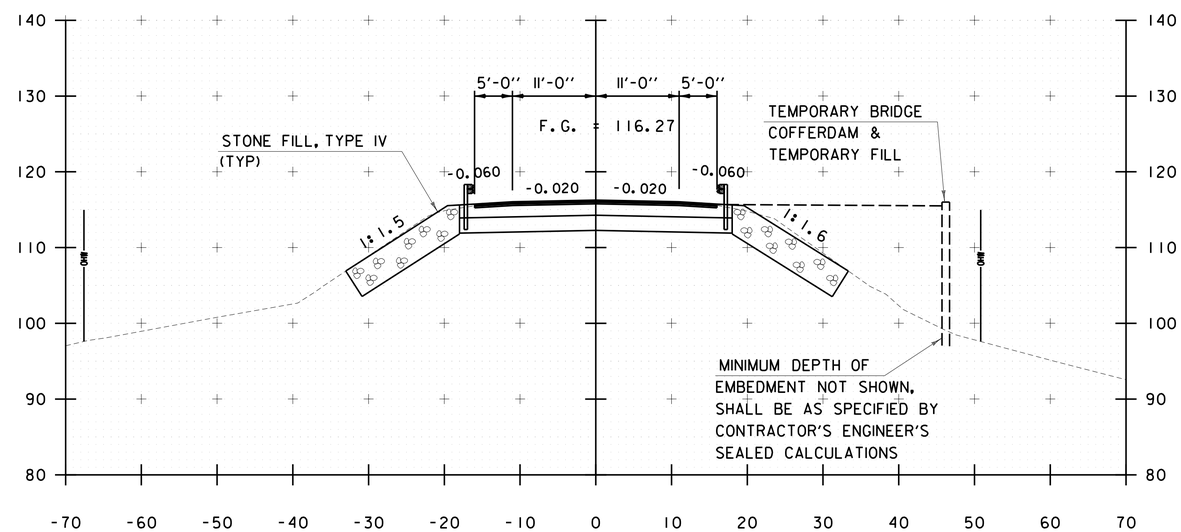

515+00

0 10 20
SCALE IN FEET

BEGIN APPROACH STA 514+00.00

BEGIN PROJECT STA 515+00.00

STA. 514+00 TO STA. 515+50

CHA

PROJECT NAME: NORTH HERO GRAND ISLE BRIDGE	
PROJECT NUMBER: BHF 028-1(26)	
FILE NAME: z12b142xc.dgn	PLOT DATE: 10/7/2016
PROJECT LEADER: D. GOZALKOWSKI	DRAWN BY: A. KIRBY
DESIGNED BY: J. PARRELLI	CHECKED BY: J. SHIELDS
CROSS SECTION SHEET 1	SHEET 31 OF 172

FILE NAME = V:\Projects\ANY\K3\28173\CADD_MSTN\12b142\Consultants\z12b142xc.dgn
DATE/TIME = 10/7/2016
USER = 3724

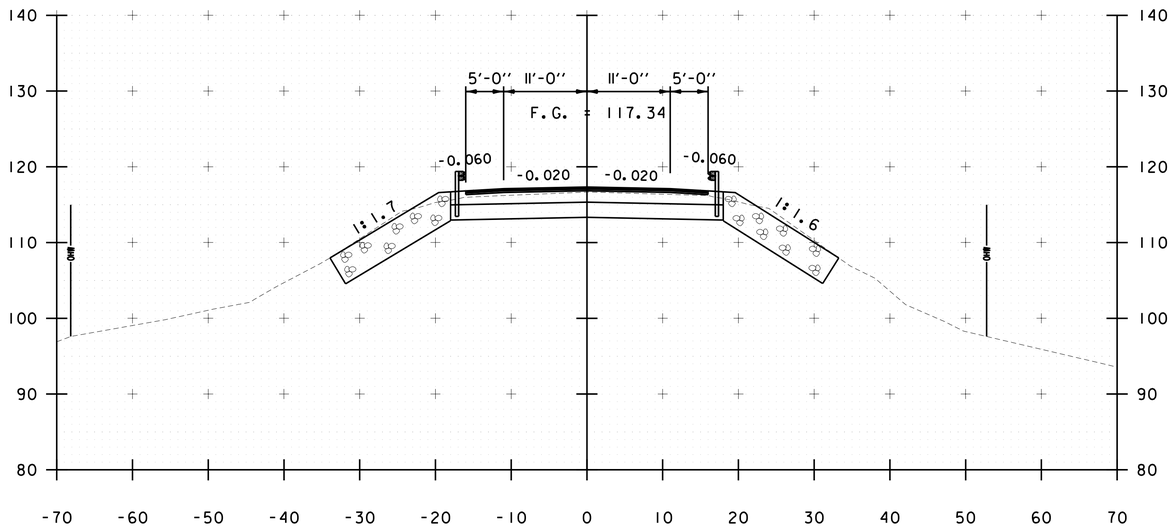

516+50

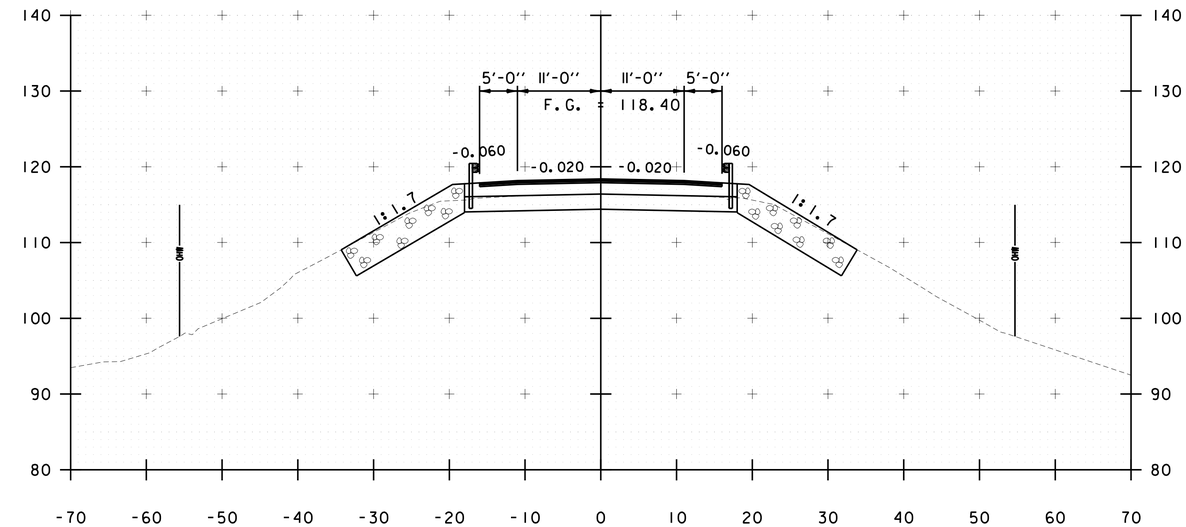

517+50

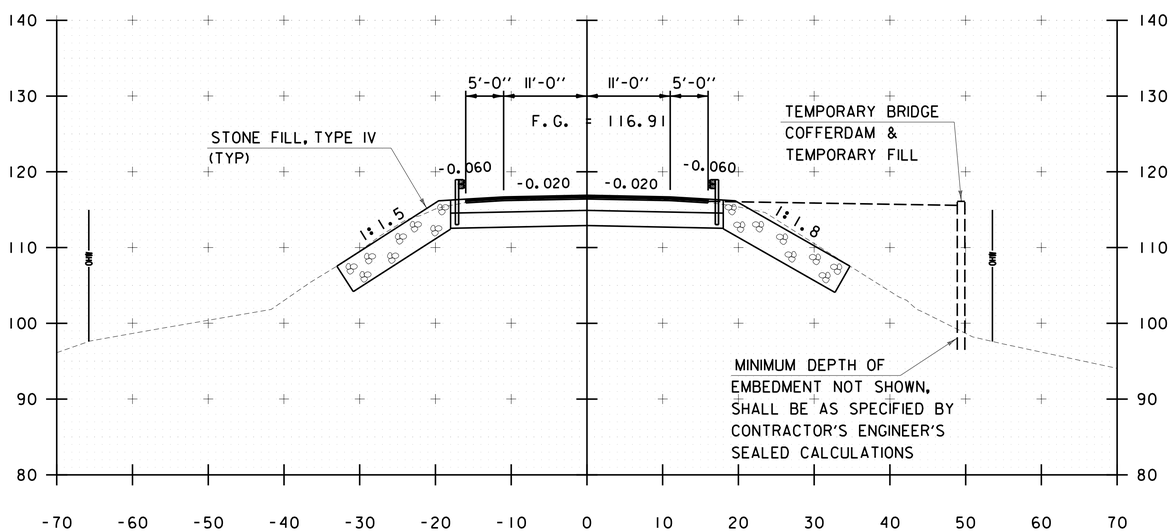

516+00

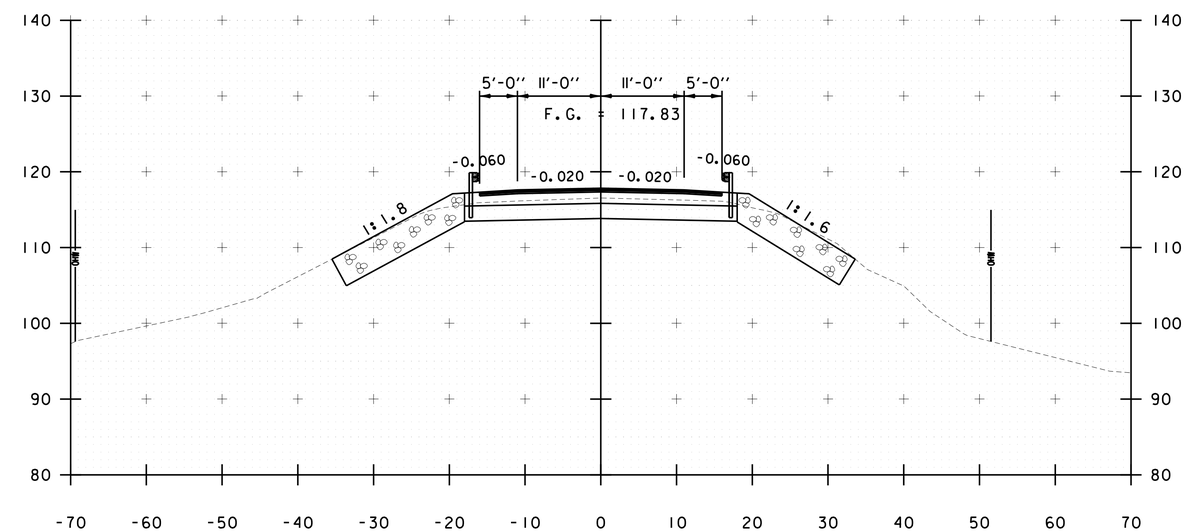

517+00

0 10 20
SCALE IN FEET

STA. 516+00 TO STA. 517+50

CHA

PROJECT NAME: NORTH HERO GRAND ISLE BRIDGE	
PROJECT NUMBER: BHF 028-1(26)	
FILE NAME: z12b142xc.dgn	PLOT DATE: 10/7/2016
PROJECT LEADER: D. GOZALKOWSKI	DRAWN BY: A. KIRBY
DESIGNED BY: J. PARRELLI	CHECKED BY: J. SHIELDS
CROSS SECTION SHEET 2	SHEET 32 OF 172

FILE NAME = V:\Projects\ANY\K3\28173\CADD_MSTN\12b142\Consultants\z12b142xc.dgn
DATE/TIME = 10/7/2016
USER = 3724

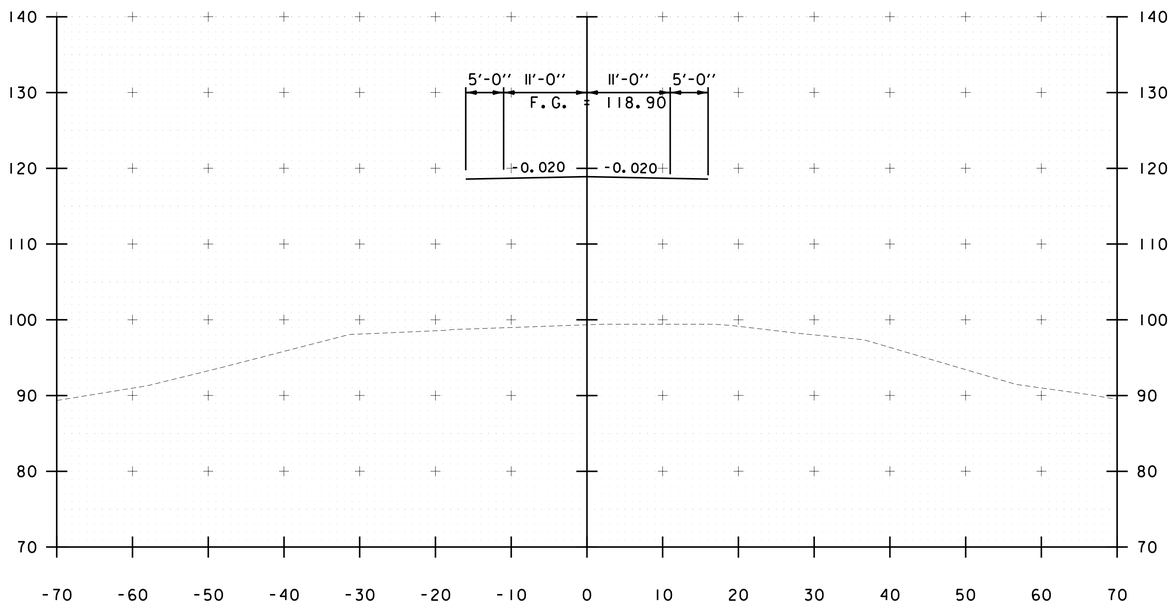

518+00

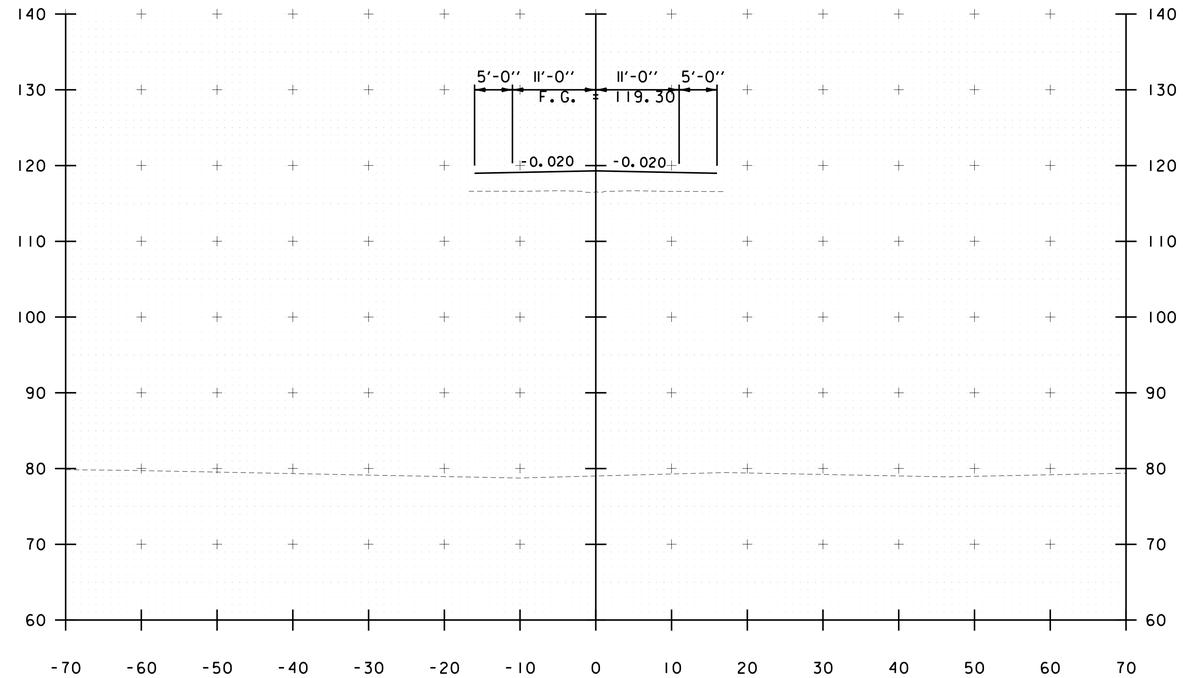

519+00

BEGIN BRIDGE STA 517+70.41

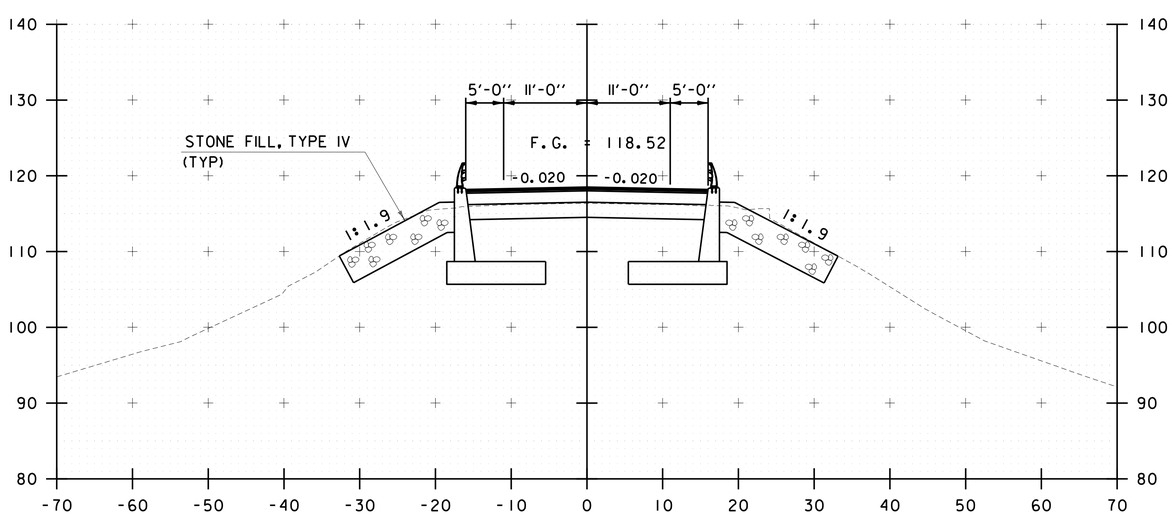

517+60

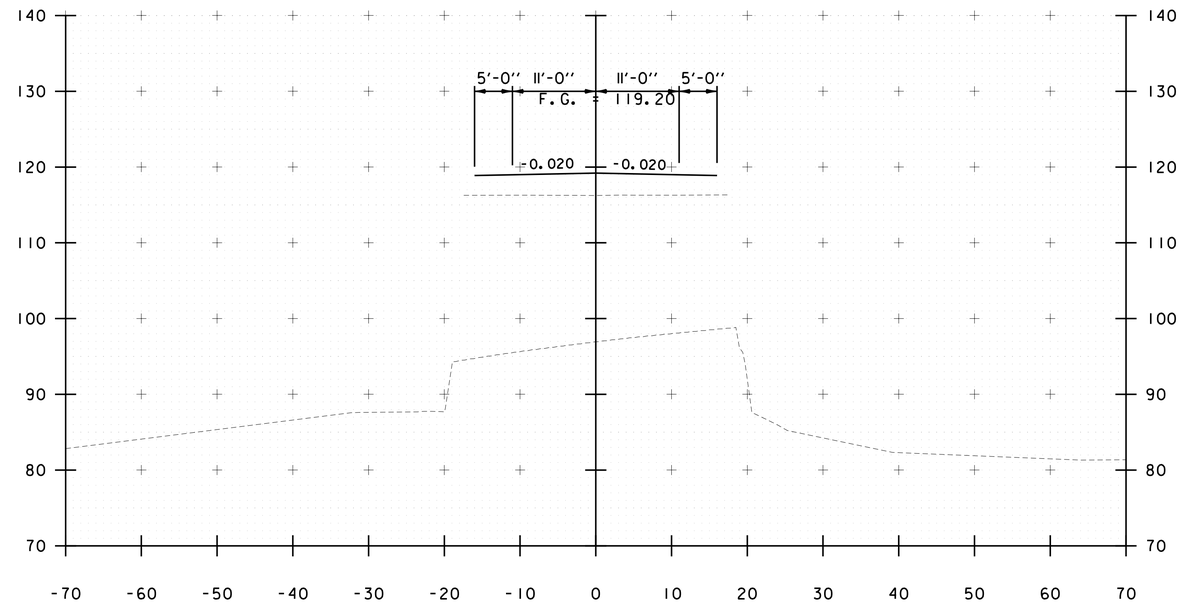

518+50

0 10 20
SCALE IN FEET

STA. 517+60 TO STA. 519+00

CHA

PROJECT NAME: NORTH HERO GRAND ISLE BRIDGE	
PROJECT NUMBER: BHF 028-1(26)	
FILE NAME: z12b142xc.dgn	PLOT DATE: 10/7/2016
PROJECT LEADER: D. GOZALKOWSKI	DRAWN BY: A. KIRBY
DESIGNED BY: J. PARRELLI	CHECKED BY: J. SHIELDS
CROSS SECTION SHEET 3	SHEET 33 OF 172

FILE NAME = V:\Projects\ANYK3\28173\CADD_MSTN\12b142\Consultants\z12b142xc.dgn
DATE/TIME = 10/7/2016
USER = 3724

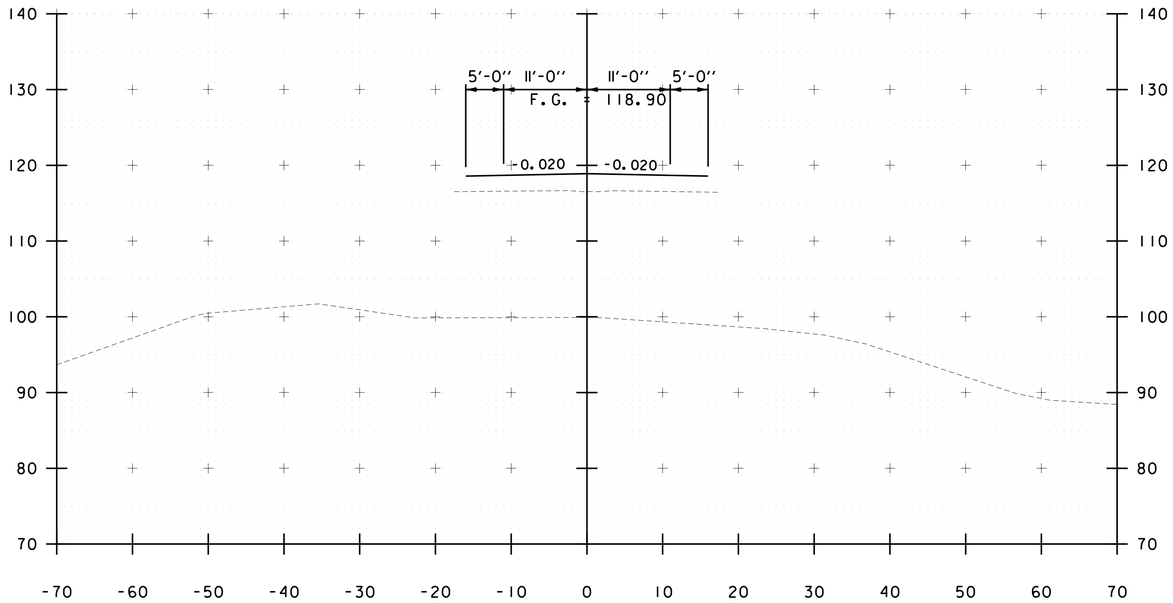

520+00

END BRIDGE STA 520+29.59

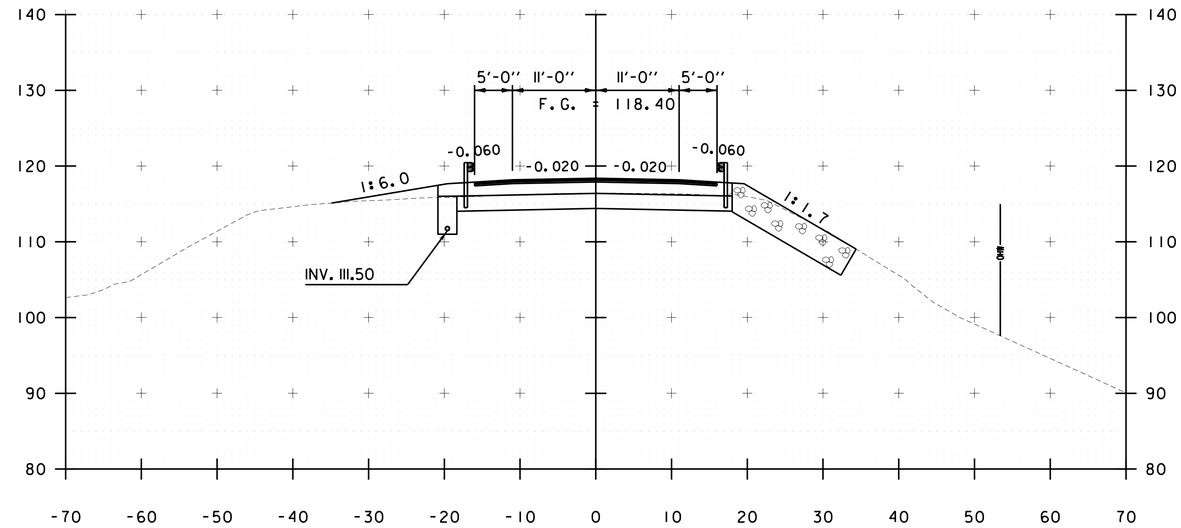

520+50

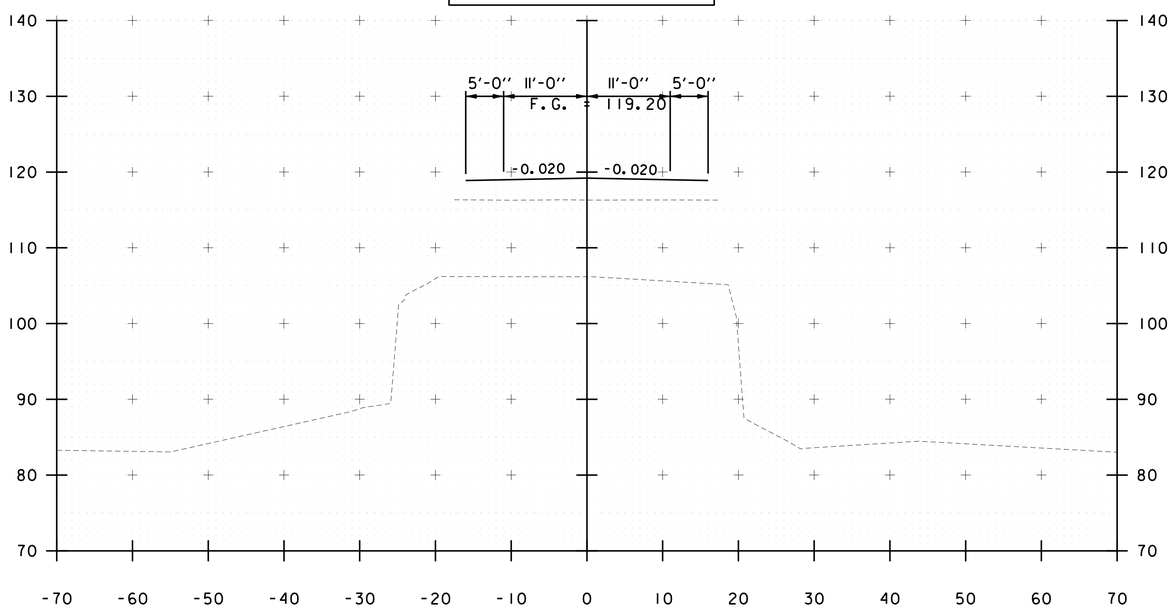

519+50

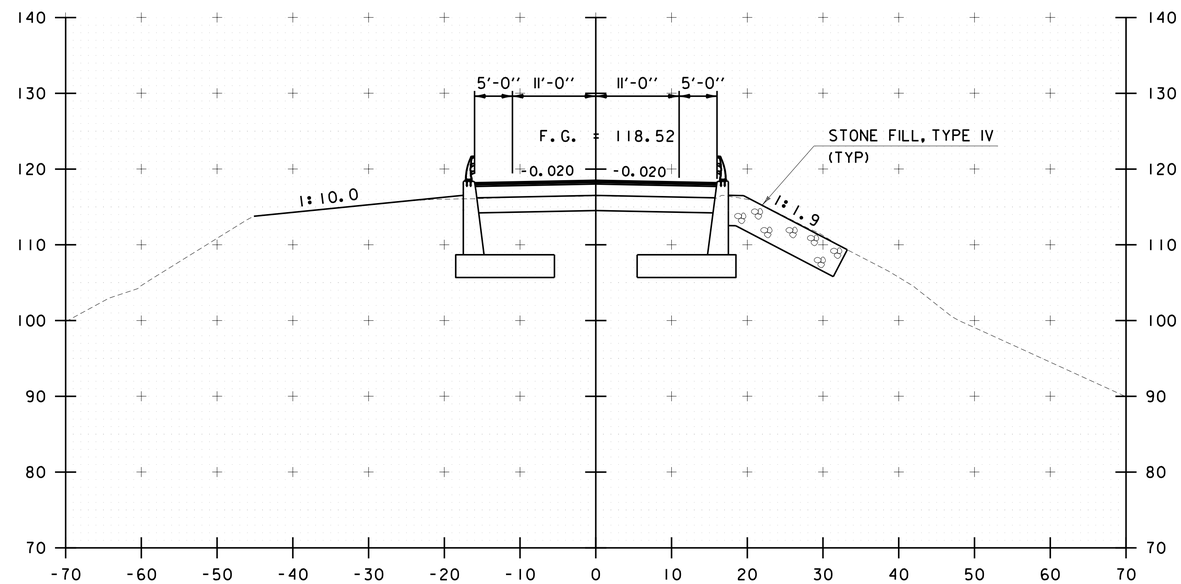

520+40

0 10 20
SCALE IN FEET

STA. 519+50 TO STA. 520+50

CHA

PROJECT NAME: NORTH HERO GRAND ISLE BRIDGE	
PROJECT NUMBER: BHF 028-1(26)	
FILE NAME: z12b142xc.dgn	PLOT DATE: 10/7/2016
PROJECT LEADER: D. GOZALKOWSKI	DRAWN BY: A. KIRBY
DESIGNED BY: J. PARRELLI	CHECKED BY: J. SHIELDS
CROSS SECTION SHEET 4	SHEET 34 OF 172

FILE NAME = V:\Projects\ANY\K3\28173\CADD_MSTN\12b142\Consultants\z12b142xc.dgn
DATE/TIME = 10/7/2016
USER = 3724

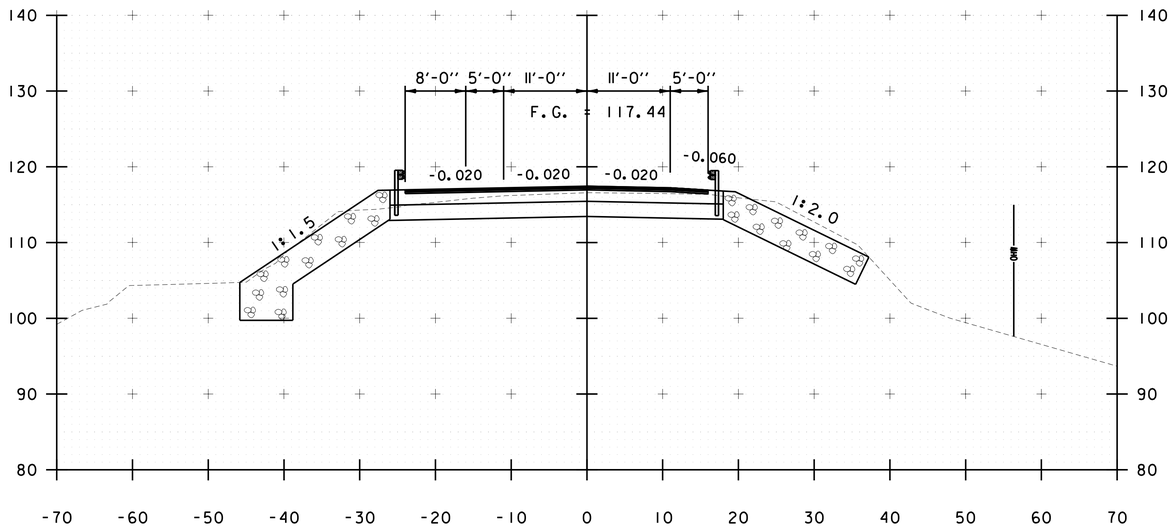

521+50

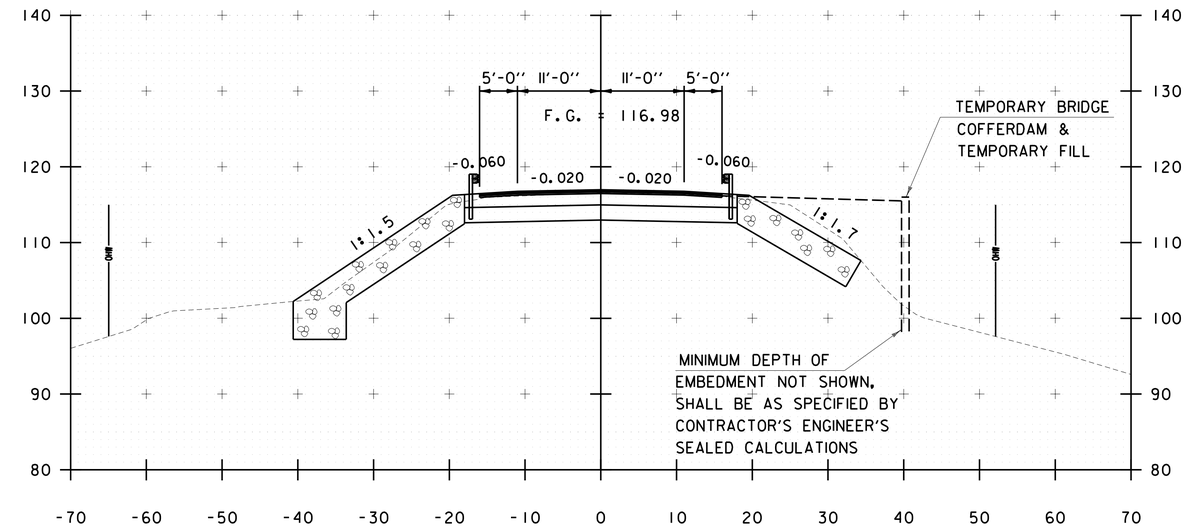

522+50

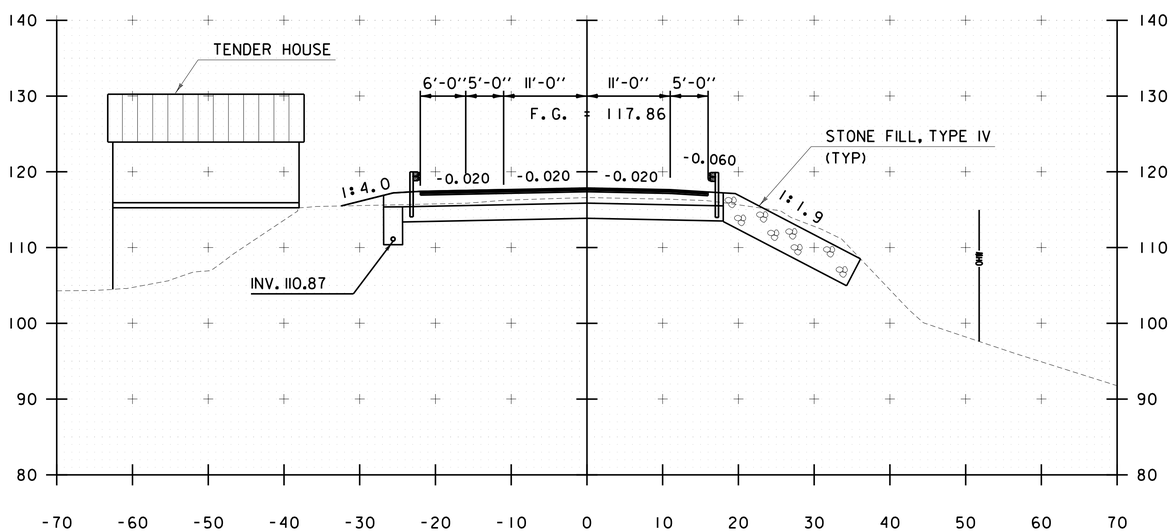

521+00

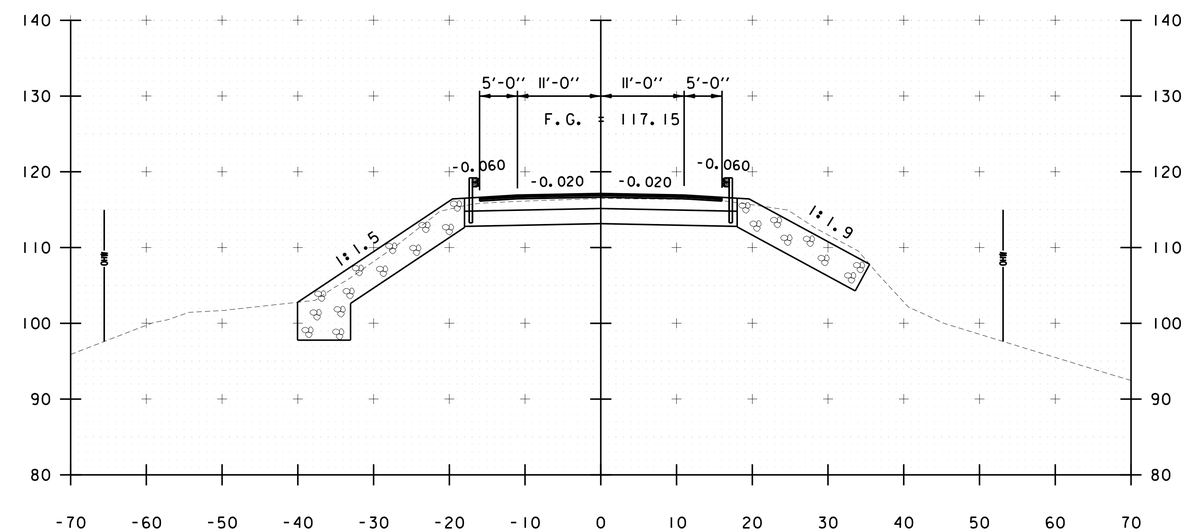

522+00

0 10 20
SCALE IN FEET

STA. 521+00 TO STA. 522+50

CHA

PROJECT NAME: NORTH HERO GRAND ISLE BRIDGE	
PROJECT NUMBER: BHF 028-1(26)	
FILE NAME: z12b142xc.dgn	PLOT DATE: 10/7/2016
PROJECT LEADER: D. GOZALKOWSKI	DRAWN BY: A. KIRBY
DESIGNED BY: J. PARRELLI	CHECKED BY: J. SHIELDS
CROSS SECTION SHEET 5	SHEET 35 OF 172

FILE NAME = V:\Projects\ANY\K3\28173\CADD_MSTN\12b142\Consultants\z12b142xc.dgn
DATE/TIME = 10/7/2016
USER = 3724

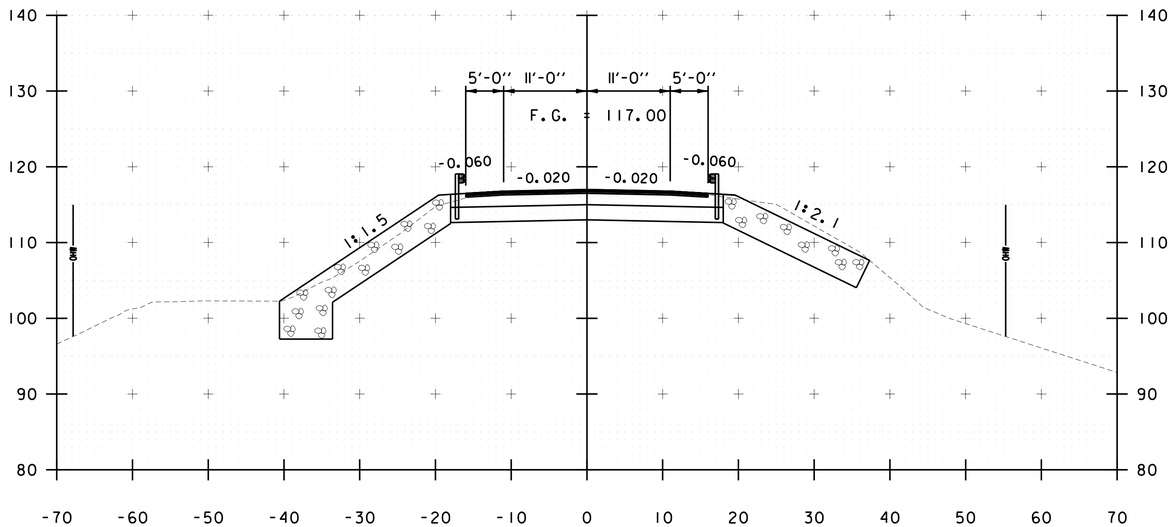

523+50

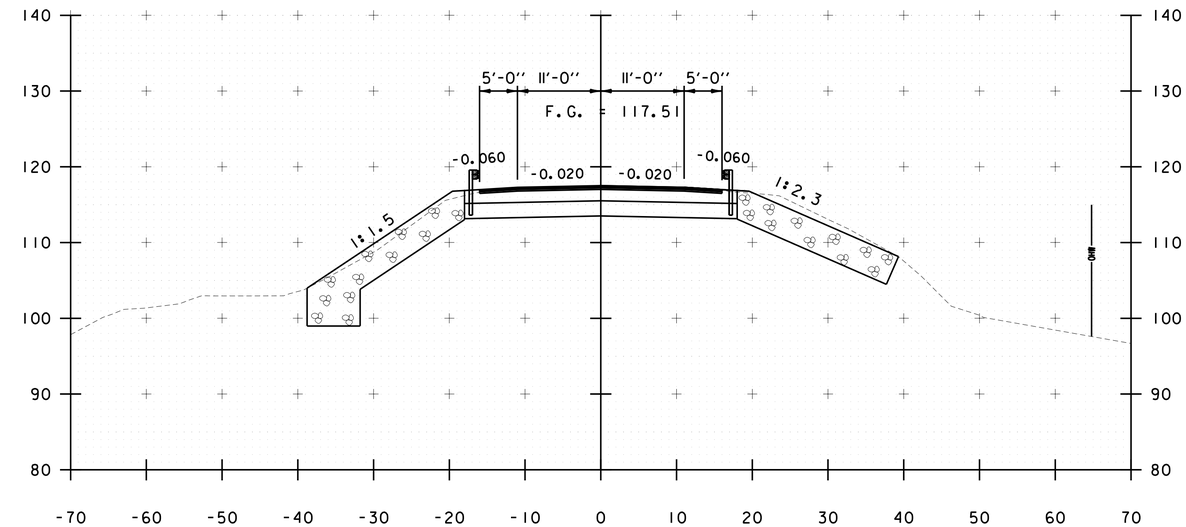

524+50

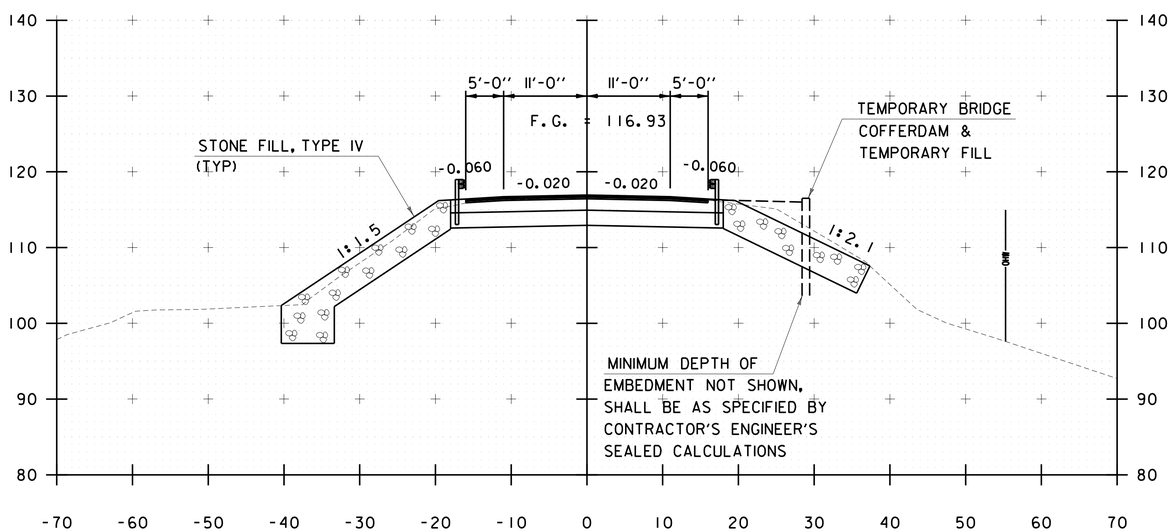

523+00

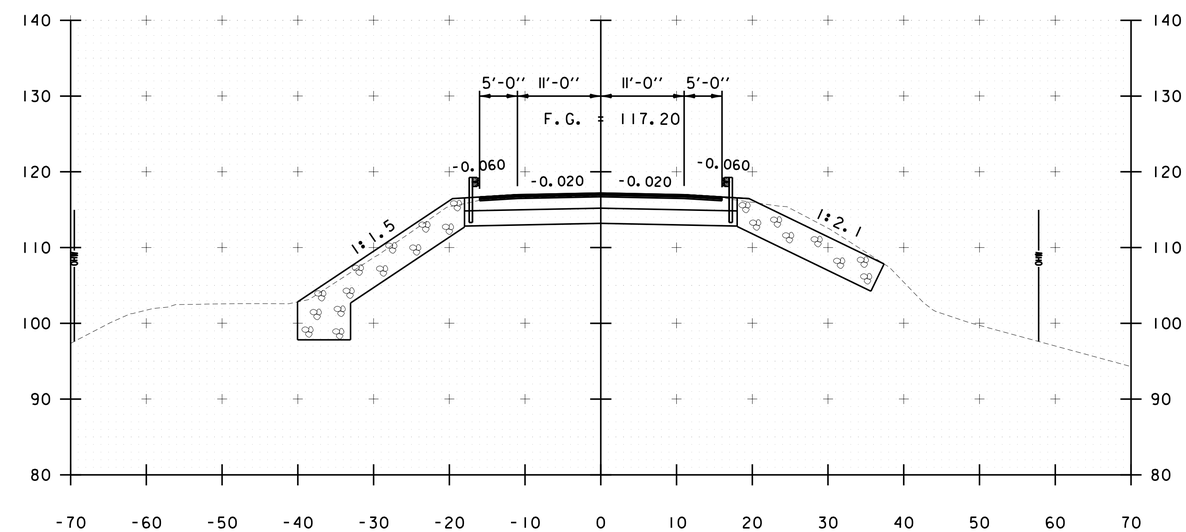

524+00

0 10 20
SCALE IN FEET

STA. 523+00 TO STA. 524+50

CHA

PROJECT NAME: NORTH HERO GRAND ISLE BRIDGE	
PROJECT NUMBER: BHF 028-1(26)	
FILE NAME: z12b142xc.dgn	PLOT DATE: 10/7/2016
PROJECT LEADER: D. GOZALKOWSKI	DRAWN BY: A. KIRBY
DESIGNED BY: J. PARRELLI	CHECKED BY: J. SHIELDS
CROSS SECTION SHEET 6	SHEET 36 OF 172

FILE NAME = V:\Projects\ANY\K3\28173\CADD_MSTN\12b142\Consultants\z12b142xc.dgn
DATE/TIME = 10/7/2016
USER = 3724

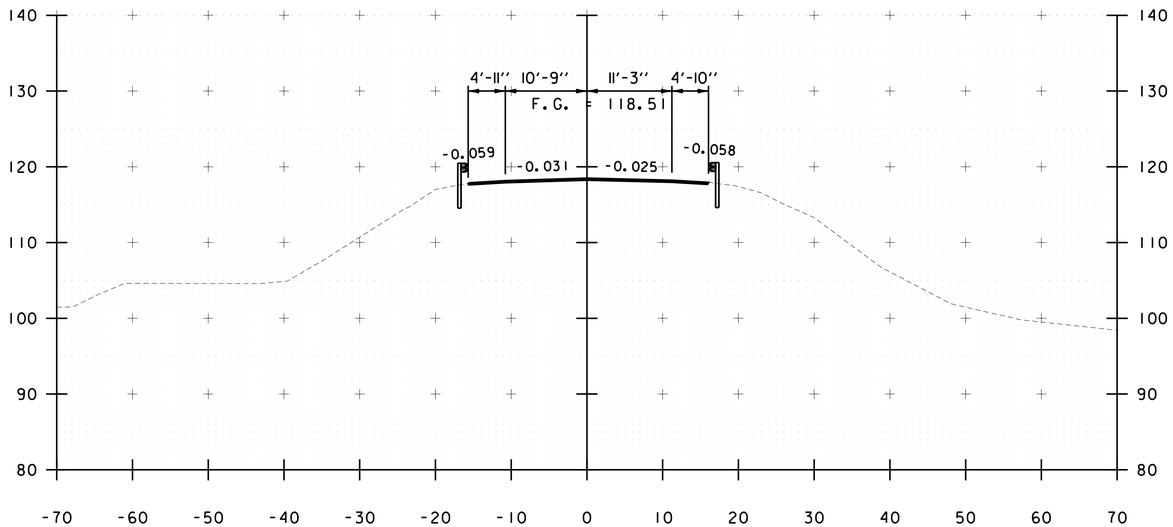

525+50

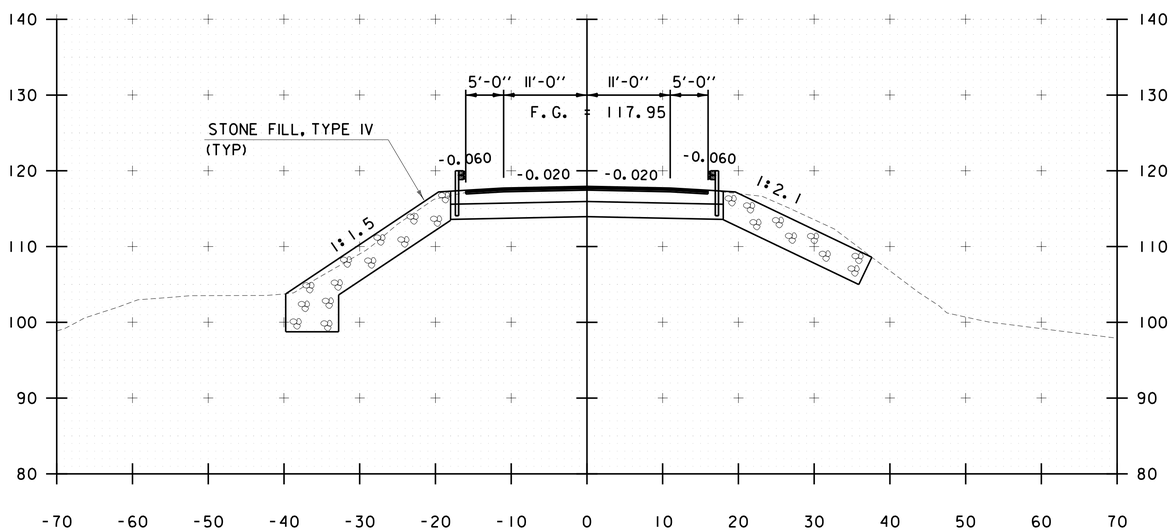

525+00

END PROJECT STA 525+00.00

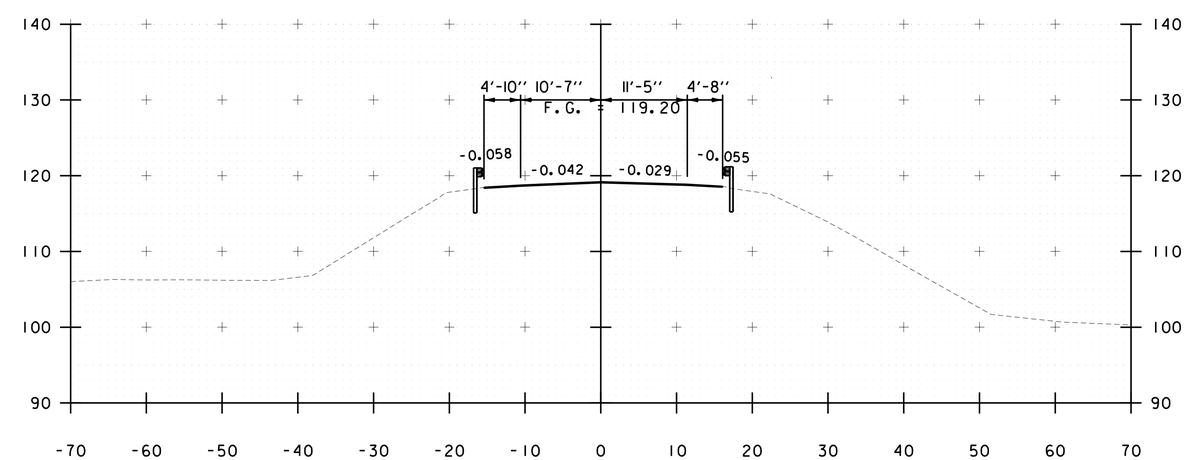

526+00

END APPROACH STA 526+00.00

0 10 20
SCALE IN FEET

STA. 525+00 TO STA. 526+00

CHA

PROJECT NAME: NORTH HERO GRAND ISLE BRIDGE	
PROJECT NUMBER: BHF 028-1(26)	
FILE NAME: z12b142xc.dgn	PLOT DATE: 10/7/2016
PROJECT LEADER: D. GOZALKOWSKI	DRAWN BY: A. KIRBY
DESIGNED BY: J. PARRELLI	CHECKED BY: J. SHIELDS
CROSS SECTION SHEET 7	SHEET 37 OF 172

FILE NAME = V:\Projects\ANYK3\28173\CADD_MSTN\12b142\Consultants\z12b142xc.dgn
DATE/TIME = 10/7/2016
USER = 3724

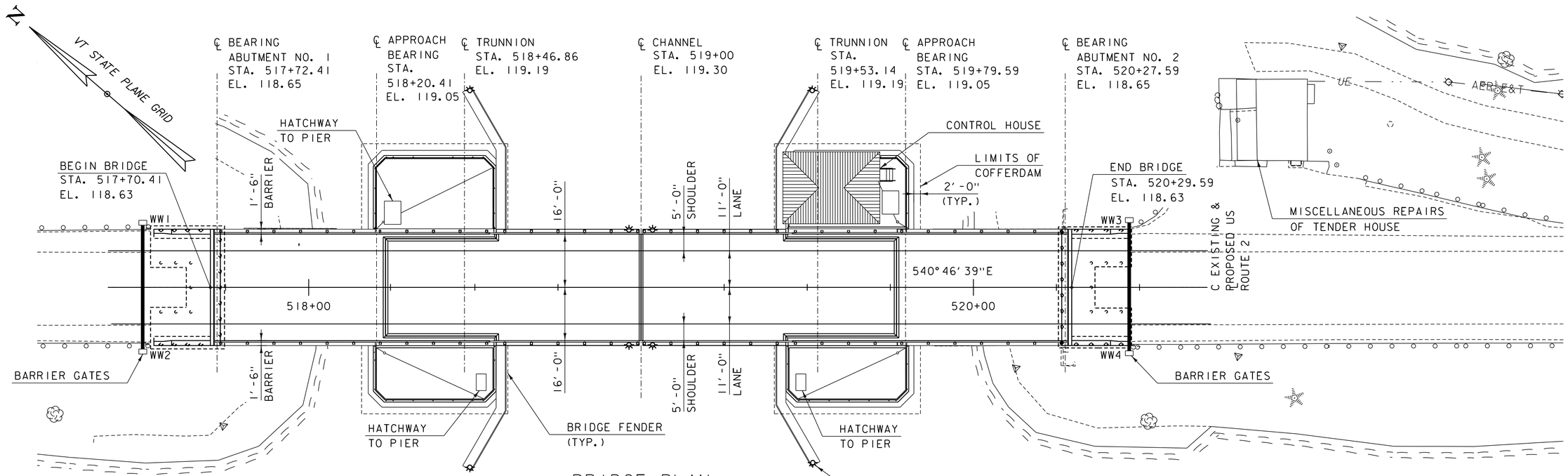

BRIDGE PLAN

SCALE 1/16" = 1'-0"

16 0 16

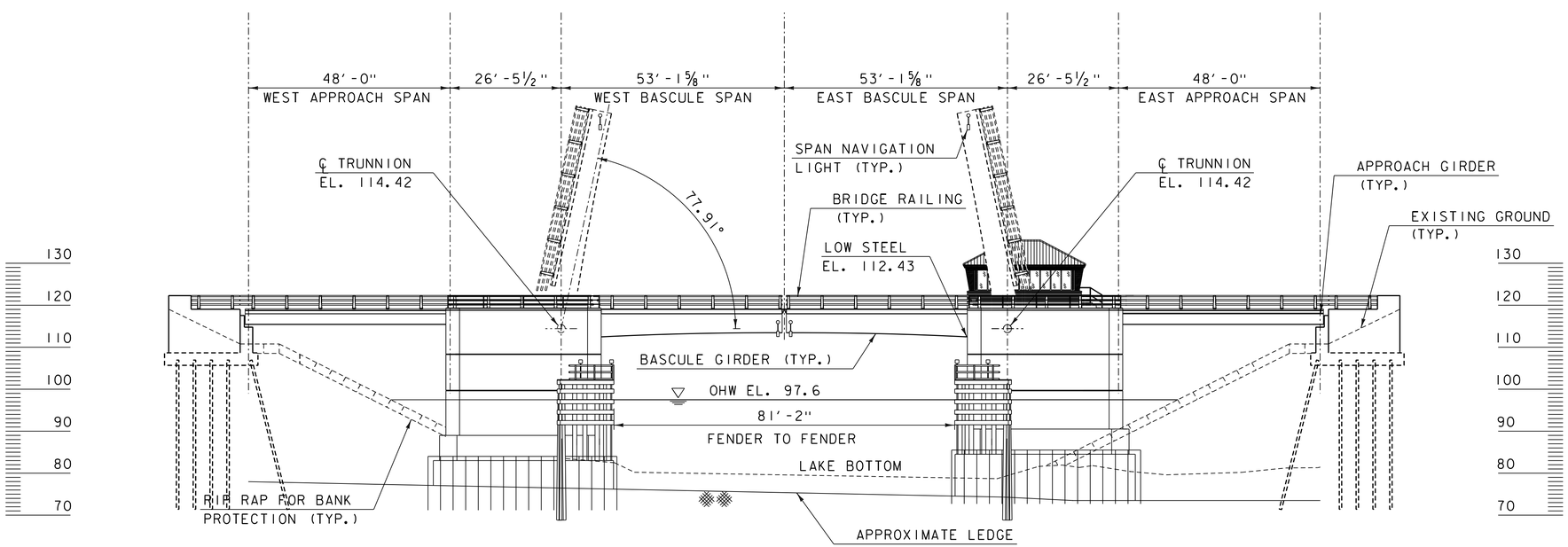

BRIDGE ELEVATION

SCALE 1/16" = 1'-0"

16 0 16

PRELIMINARY PLANS

PROJECT NAME: NORTH HERO GRAND ISLE BRIDGE	
PROJECT NUMBER: BHF 028-1(26)	
FILE NAME: z12br142pe.dgn	PLOT DATE: 10/7/2016
PROJECT LEADER: T. FRENCH	DRAWN BY: S. SANTRICH
DESIGNED BY: H. PROTIN	CHECKED BY: P. DAVIS
BRIDGE PLAN & ELEVATION	SHEET 38 OF 172

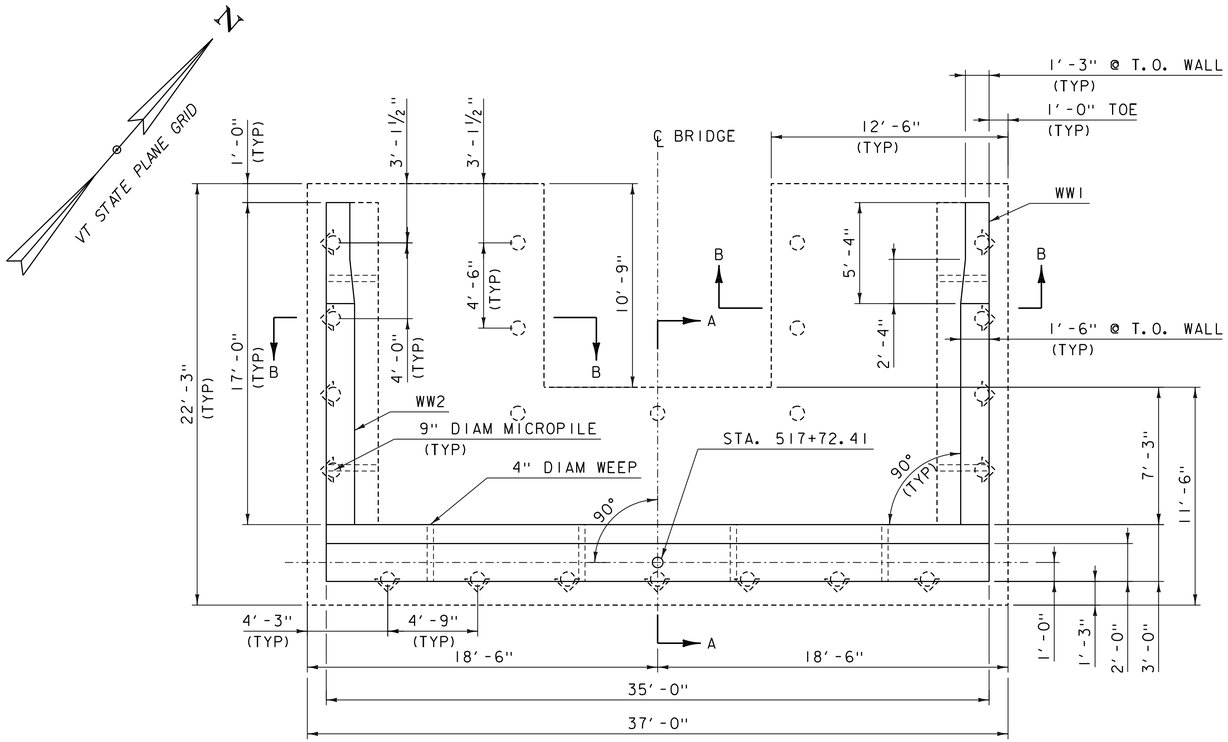

ABUTMENT 1 PLAN

SCALE ¼" = 1'-0"

4' 0 4'

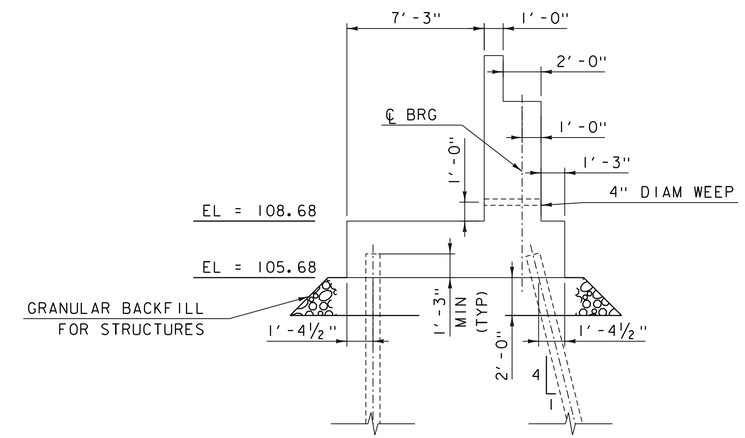

SECTION A-A

SCALE ¼" = 1'-0"

4' 0 4'

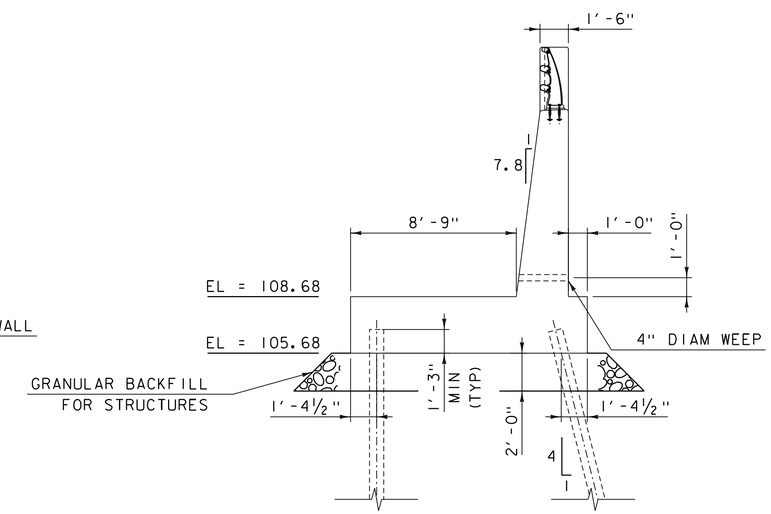

SECTION B-B

SCALE ¼" = 1'-0"

4' 0 4'

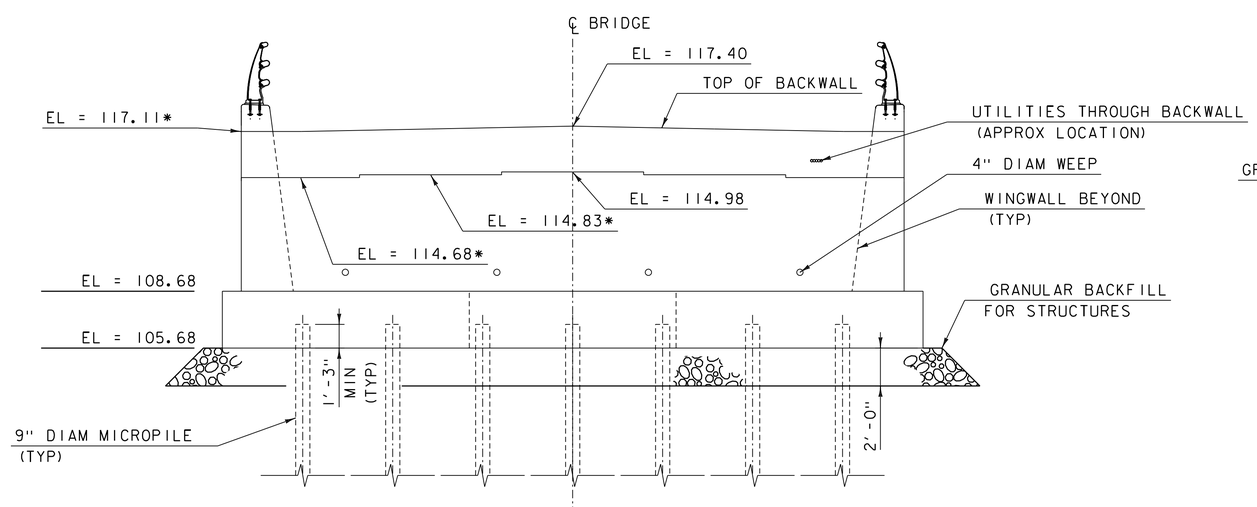

ELEVATION

SCALE ¼" = 1'-0"

4' 0 4'

* ABUTMENT IS SYMMETRICAL ABOUT ℄ BRIDGE

PRELIMINARY PLANS

PROJECT NAME: NORTH HERO GRAND ISLE BRIDGE	
PROJECT NUMBER: BHF 028-1(26)	
FILE NAME: z12b142abutment.dgn	PLOT DATE: 10/7/2016
PROJECT LEADER: T. FRENCH	DRAWN BY: P. LEFEBVRE
DESIGNED BY: P. LEFEBVRE	CHECKED BY: M. MOZER
ABUTMENT 1 PLAN & ELEVATION	SHEET 39 OF 172

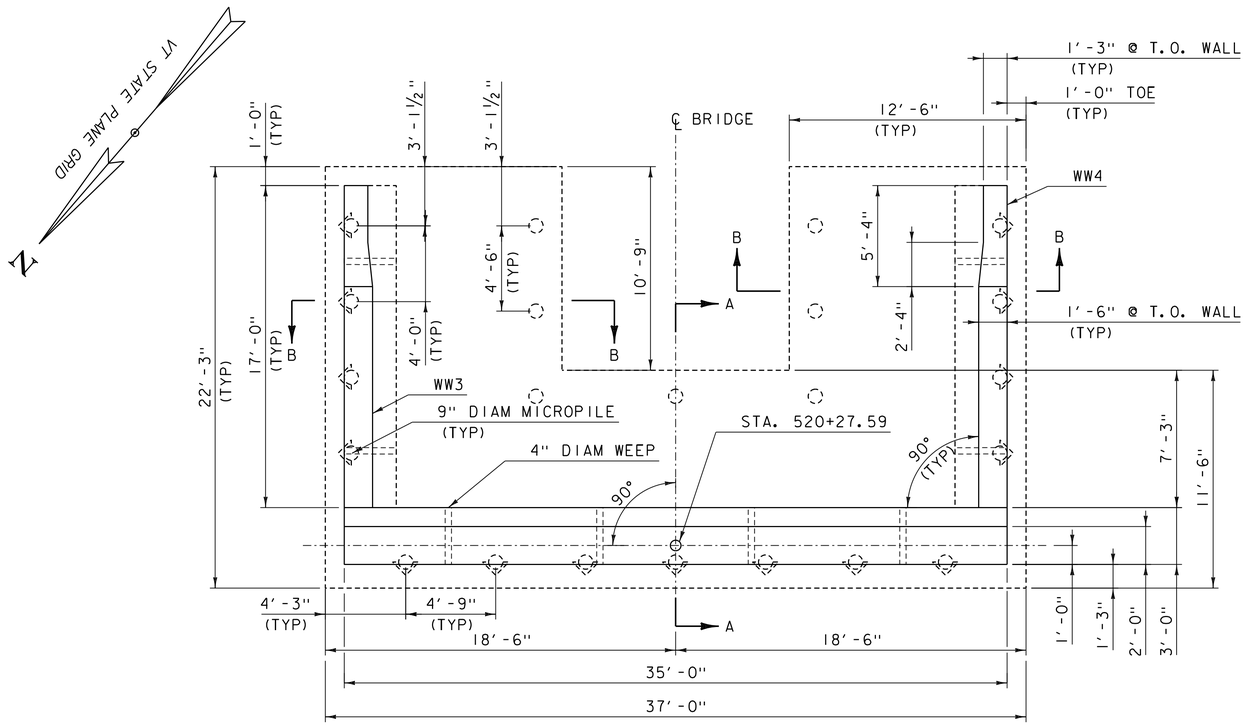

ABUTMENT 2 PLAN

SCALE ¼" = 1'-0"

4' 0 4'

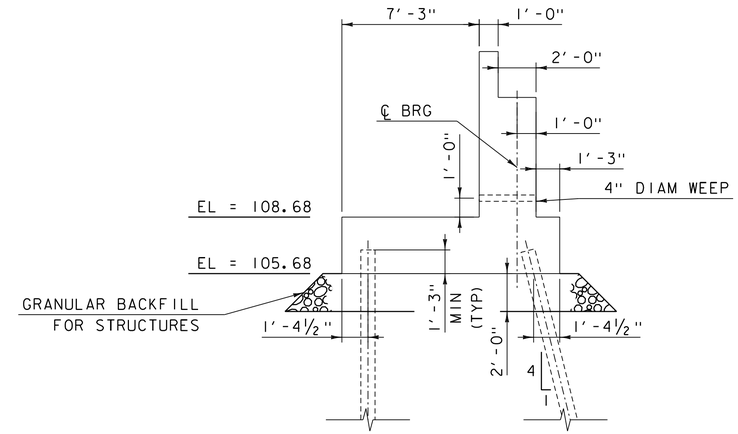

SECTION A-A

SCALE ¼" = 1'-0"

4' 0 4'

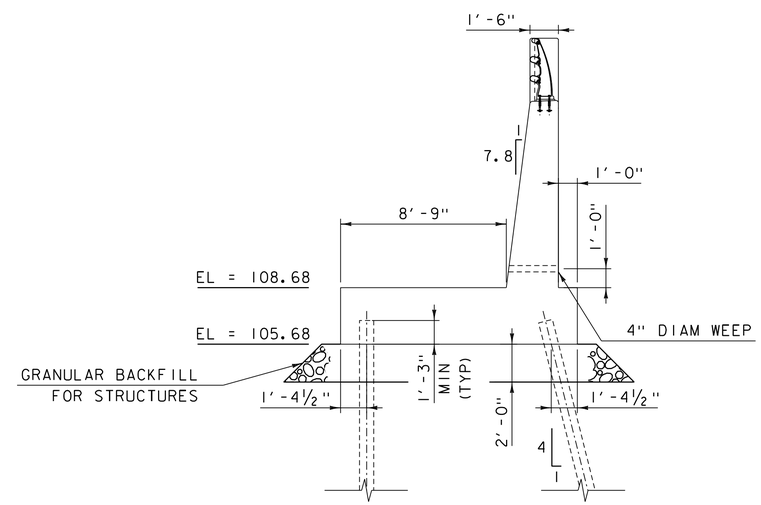

SECTION B-B

SCALE ¼" = 1'-0"

4' 0 4'

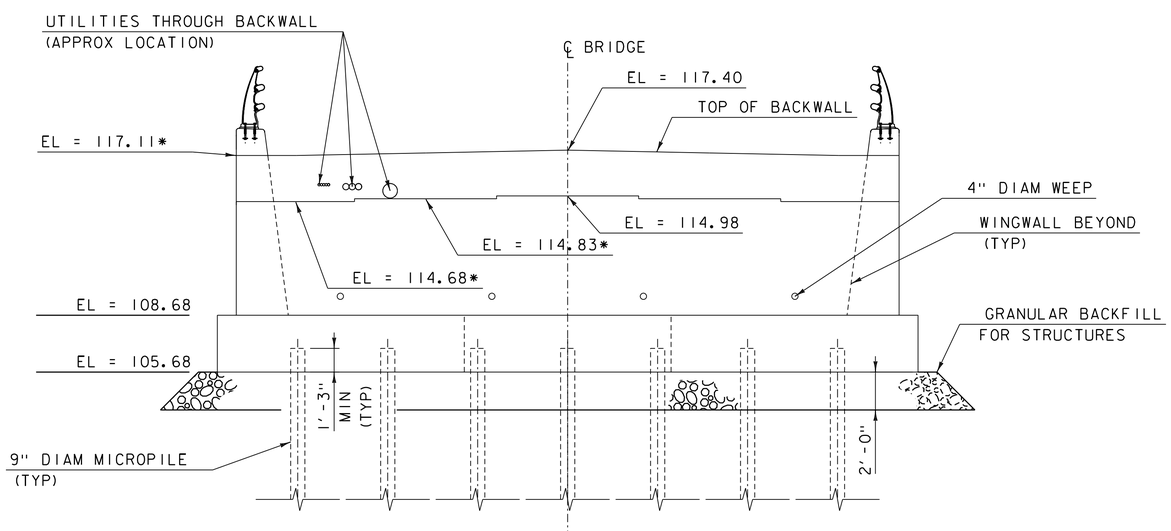

ELEVATION

SCALE ¼" = 1'-0"

4' 0 4'

* ABUTMENT IS SYMMETRICAL ABOUT ℄ BRIDGE

PRELIMINARY PLANS

PROJECT NAME: NORTH HERO GRAND ISLE BRIDGE	
PROJECT NUMBER: BHF 028-1(26)	
FILE NAME: z12b142abutmnt2.dgn	PLOT DATE: 10/7/2016
PROJECT LEADER: T. FRENCH	DRAWN BY: P. LEFEBVRE
DESIGNED BY: P. LEFEBVRE	CHECKED BY: M. MOZER
ABUTMENT 2 PLAN & ELEVATION	SHEET 40 OF 172

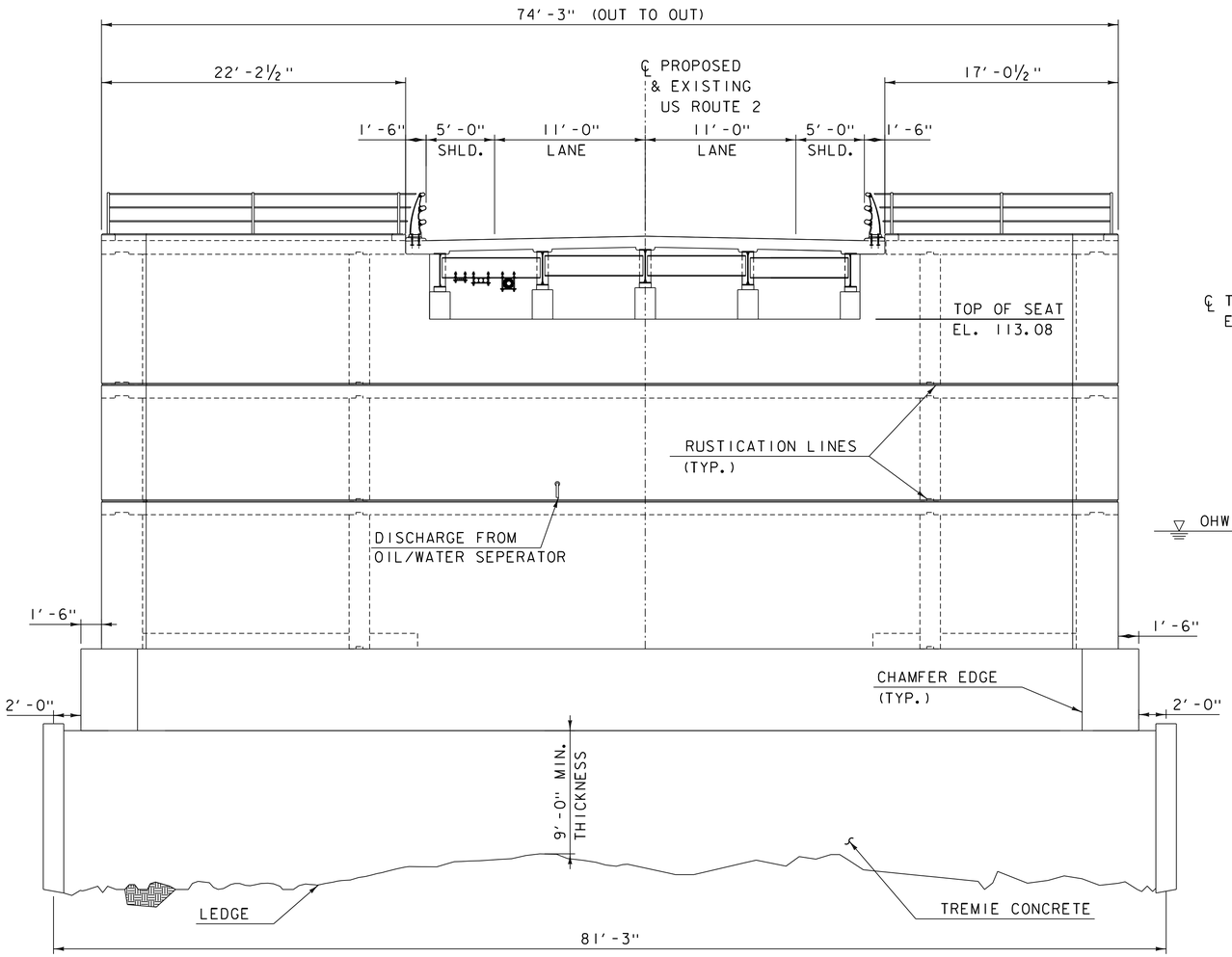

PIER 1 - WEST ELEVATION

SCALE 3/16" = 1'-0"
5.33' 0 5.33'

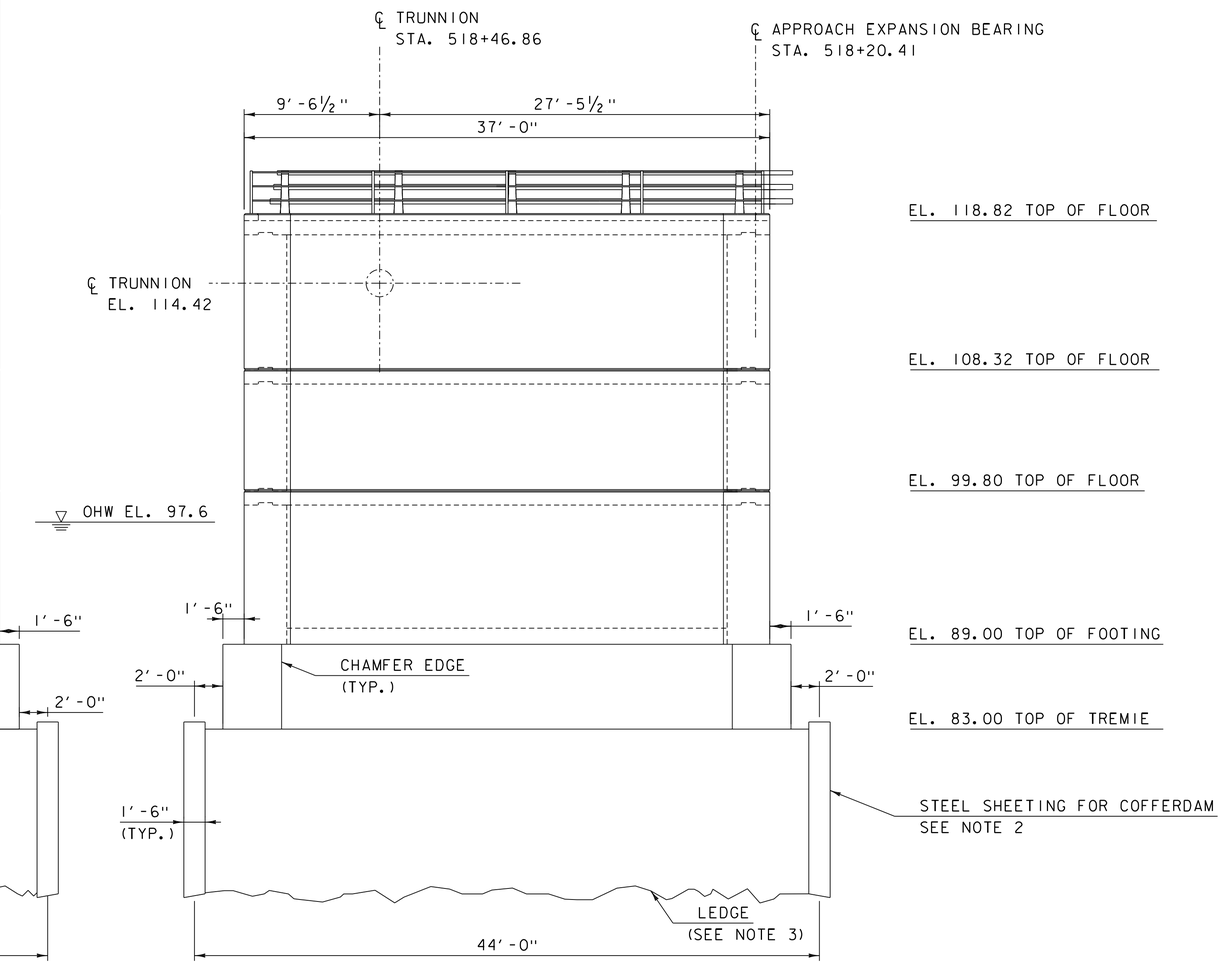

PIER 1 - NORTH ELEVATION

SCALE 3/16" = 1'-0"
5.33' 0 5.33'

NOTE

1. FENDER SYSTEM NOT SHOWN FOR CLARITY.
2. STEEL SHEETING FOR COFFERDAM SHALL BE REMOVED BY CONTRACTOR OR CUT OFF 7 FT BELOW MUDLINE.
3. TOP OF LEDGE/BOTTOM OF TREMIE LINE AS SHOWN IS ASSUMED TO CORRESPOND WITH BOTTOM OF WEATHERED BEDROCK SHOWN IN BORING LOGS.

PRELIMINARY PLANS

HDR

PROJECT NAME: NORTH HERO GRAND ISLE BRIDGE	
PROJECT NUMBER: BHF 028-1(26)	
FILE NAME: z12b142piere13.dgn	PLOT DATE: 10/7/2016
PROJECT LEADER: T. FRENCH	DRAWN BY: S. SANTRICH
DESIGNED BY: H. PROTIN	CHECKED BY: P. DAVIS
PIER NO. 1 ELEVATIONS - 1	SHEET 41 OF 172

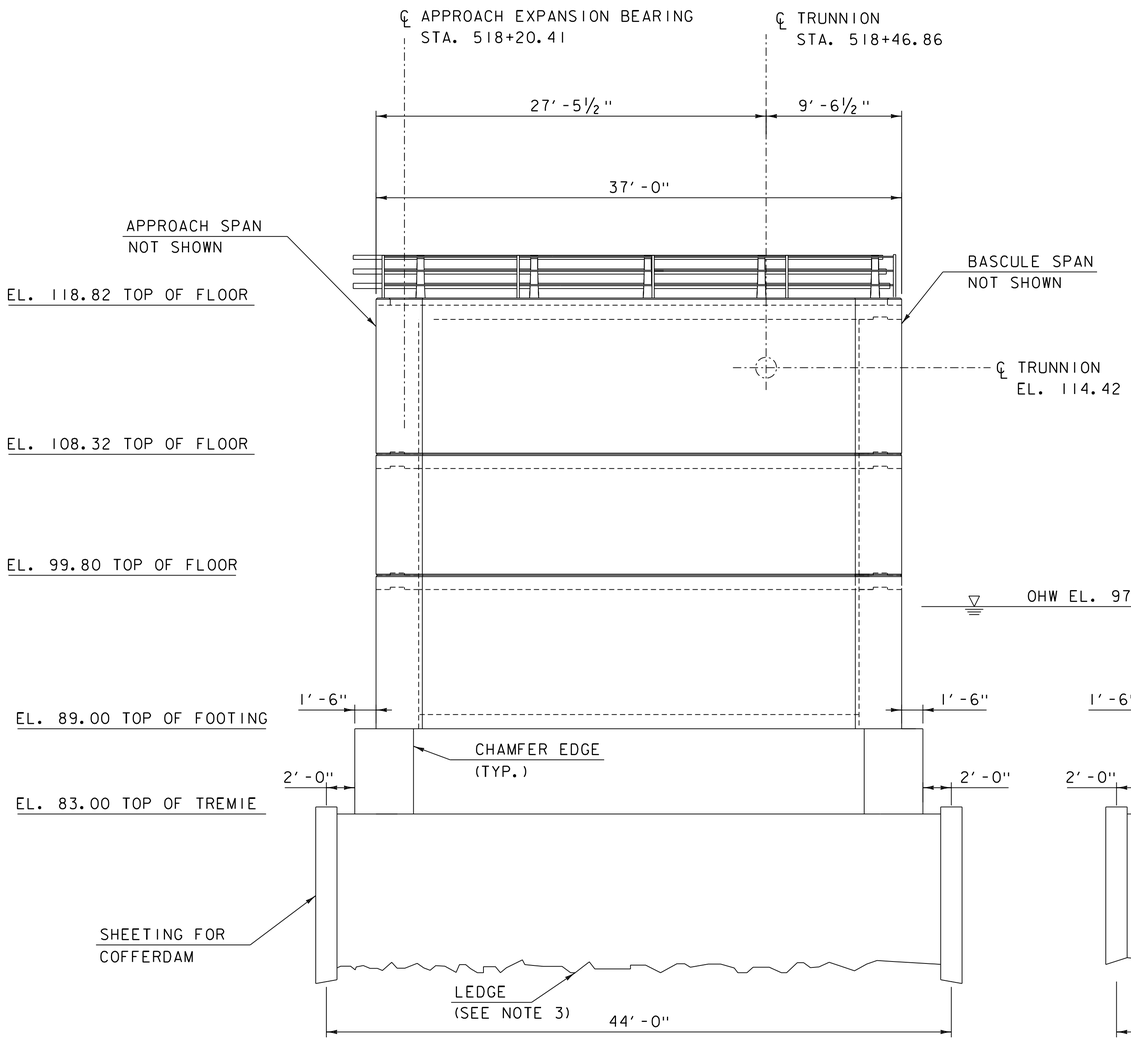

PIER 1 - SOUTH ELEVATION

SCALE 3/16" = 1'-0"
5.33' 0 5.33'

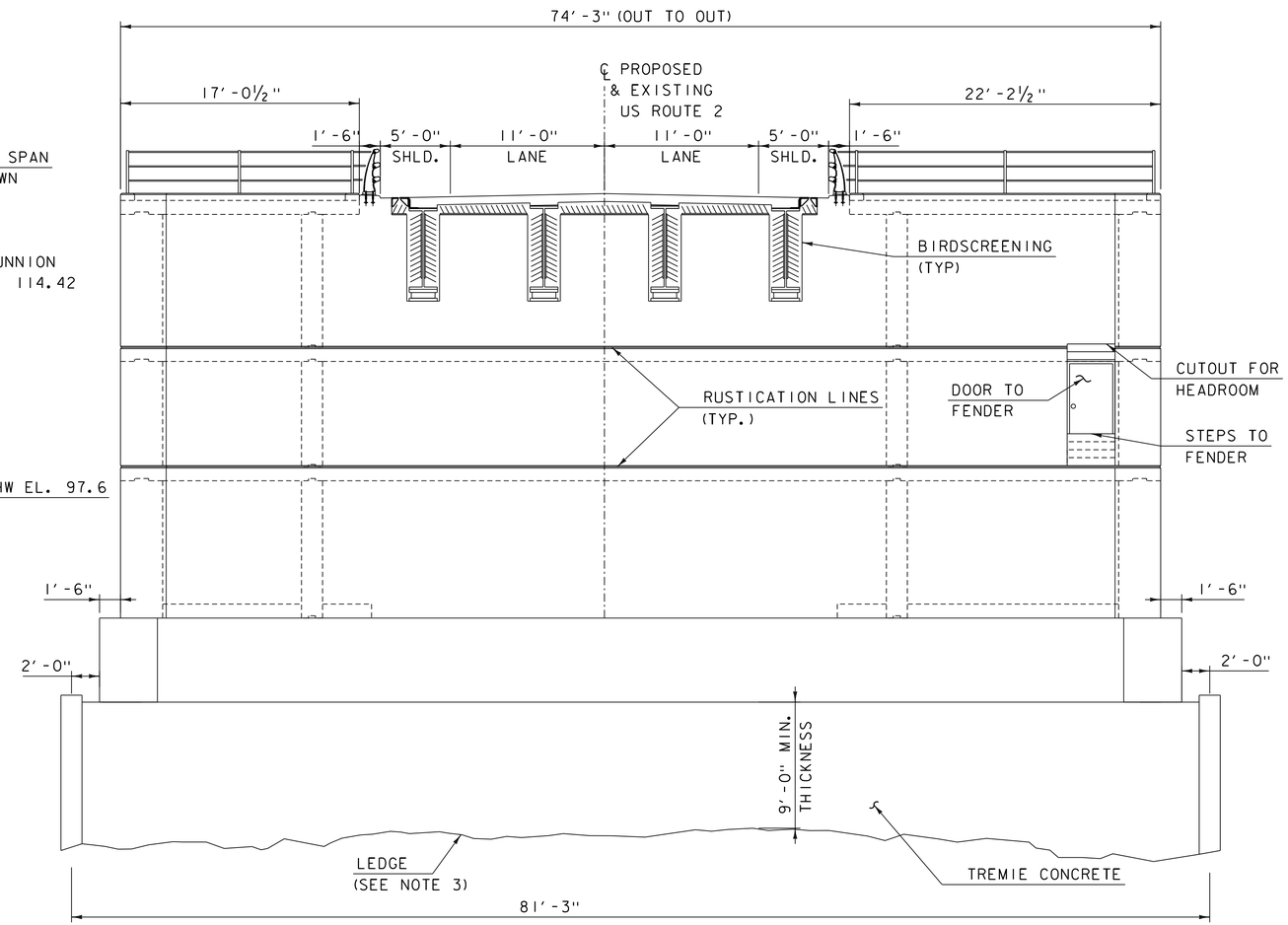

PIER 1 - EAST ELEVATION

SCALE 3/16" = 1'-0"
5.33' 0 5.33'

NOTE

1. FENDER SYSTEM NOT SHOWN FOR CLARITY.
2. STEEL SHEETING FOR COFFERDAM SHALL BE REMOVED BY CONTRACTOR OR CUT OFF 7 FT BELOW MUDLINE.
3. TOP OF LEDGE/BOTTOM OF TREMIE LINE AS SHOWN IS ASSUMED TO CORRESPOND WITH BOTTOM OF WEATHERED BEDROCK SHOWN IN BORING LOGS.
4. THE COST OF THE BIRD SCREEN WILL BE INCIDENTAL TO THE PRICE BID FOR STRUCTURAL STEEL.

PRELIMINARY PLANS

HDR

PROJECT NAME:	NORTH HERO GRAND ISLE BRIDGE
PROJECT NUMBER:	BHF 028-1(26)

FILE NAME: z12b142pier014.dgn	PLOT DATE: 10/7/2016
PROJECT LEADER: T. FRENCH	DRAWN BY: S. SANTRICH
DESIGNED BY: H. PROTIN	CHECKED BY: P. DAVIS
PIER NO. 1 ELEVATIONS - 2	SHEET 42 OF 172

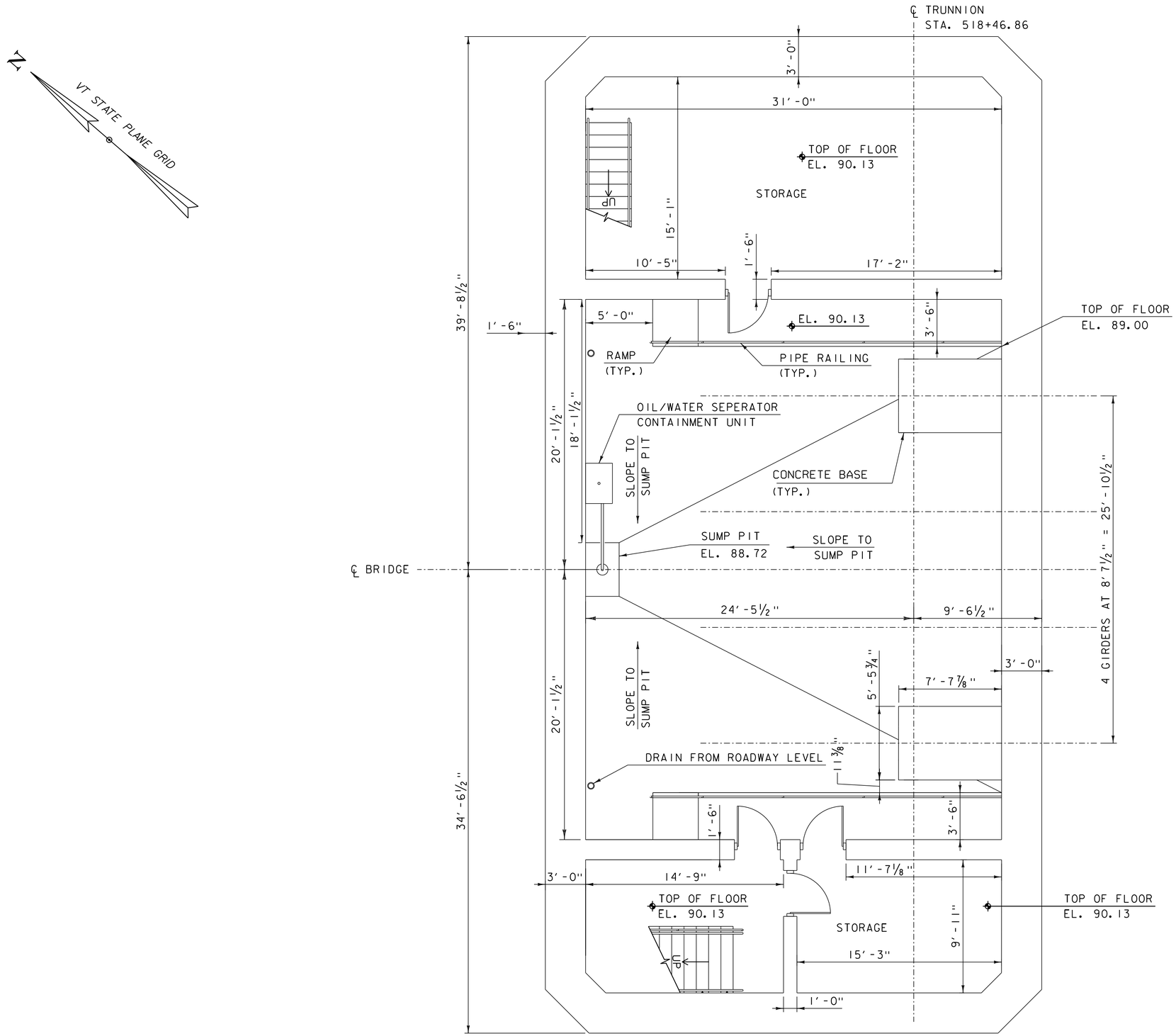

PIER 1 PLAN AT EL. 89.00

SCALE ¼" = 1'-0"
4' 0 4'

NOTE

1. FENDER, FOOTING AND TREMIE NOT SHOWN FOR CLARITY.
2. COST OF PIPE RAILING SHALL BE INCLUDED IN PRICE BID 506.60 FOR STRUCTURAL STEEL.

PRELIMINARY PLANS

PROJECT NAME: NORTH HERO GRAND ISLE BRIDGE	
PROJECT NUMBER: BHF 028-1(26)	
FILE NAME: z12b142pllevel3.dgn	PLOT DATE: 10/7/2016
PROJECT LEADER: T. FRENCH	DRAWN BY: S. SANTRICH
DESIGNED BY: H. PROTIN	CHECKED BY: P. DAVIS
PIER 1PLAN AT EL. 89.00	SHEET 43 OF 172

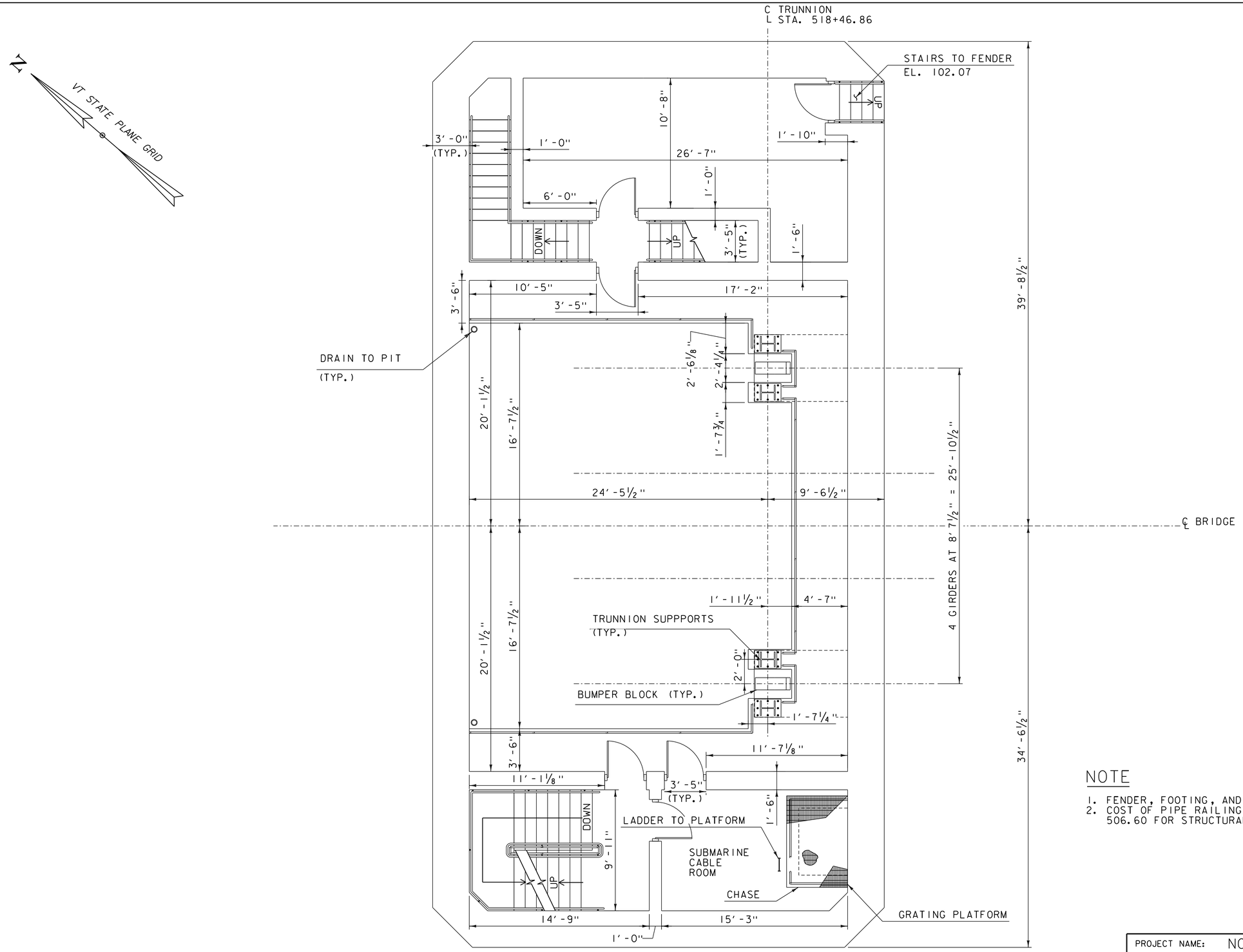

PIER 1 PLAN AT EL. 99.80

SCALE ¼" = 1'-0"
4' 0 4'

NOTE

1. FENDER, FOOTING, AND TREMIE NOT SHOWN FOR CLARITY.
2. COST OF PIPE RAILING SHALL BE INCLUDED IN PRICE BID 506.60 FOR STRUCTURAL STEEL.

PRELIMINARY PLANS

PROJECT NAME: NORTH HERO GRAND ISLE BRIDGE	
PROJECT NUMBER: BHF 028-1(26)	
FILE NAME: z12b142pllevel2.dgn	PLOT DATE: 10/7/2016
PROJECT LEADER: T. FRENCH	DRAWN BY: S. SANTRICH
DESIGNED BY: H. PROTIN	CHECKED BY: P. DAVIS
PIER 1PLAN AT EL. 99.80	SHEET 44 OF 172

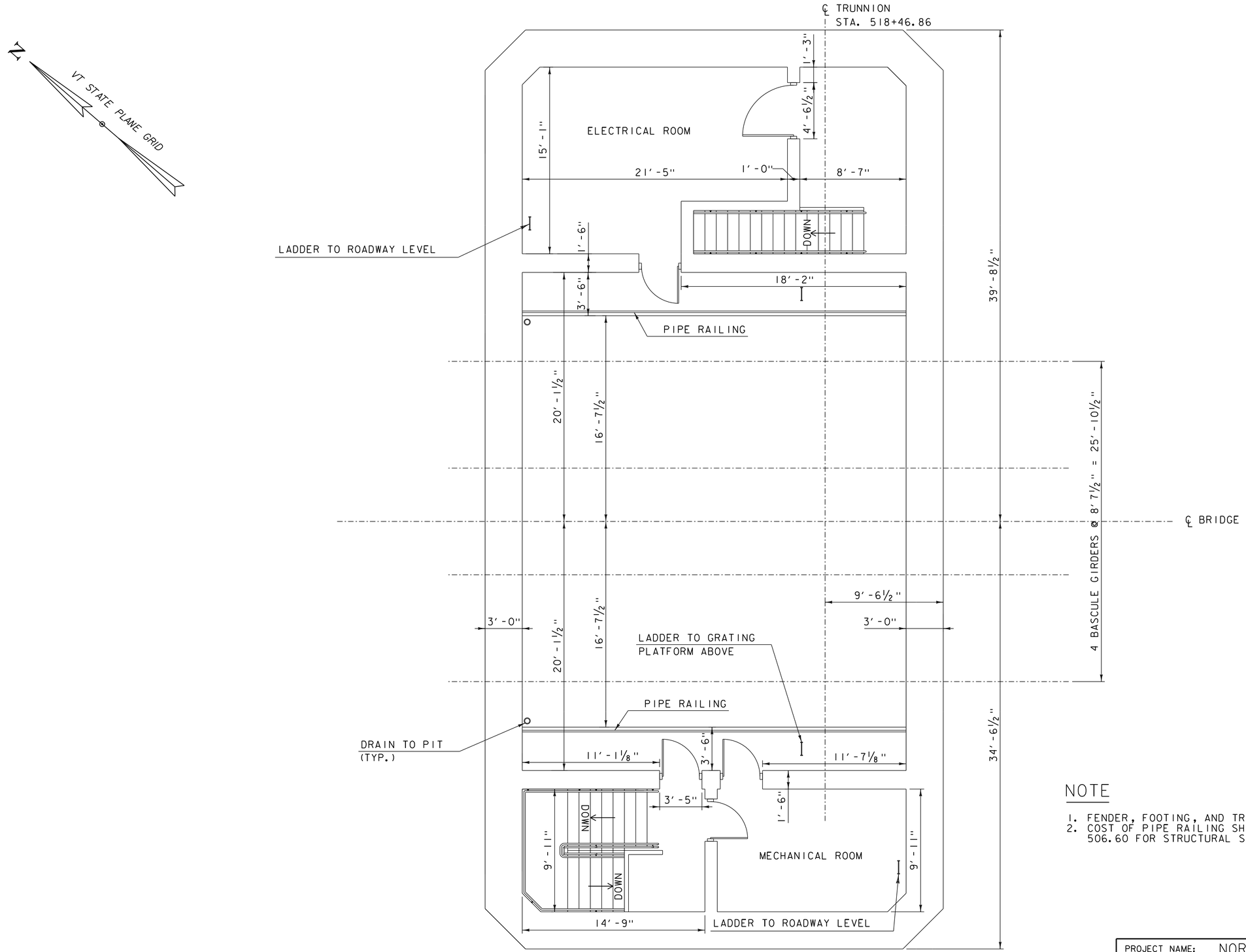

PIER 1 PLAN AT EL. 108.32

SCALE ¼" = 1'-0"
4' 0 4'

NOTE

1. FENDER, FOOTING, AND TREMIE NOT SHOWN FOR CLARITY.
2. COST OF PIPE RAILING SHALL BE INCLUDED IN PRICE BID 506.60 FOR STRUCTURAL STEEL.

PRELIMINARY PLANS

PROJECT NAME: NORTH HERO GRAND ISLE BRIDGE	
PROJECT NUMBER: BHF 028-1(26)	
FILE NAME: z12b142p11evel1.dgn	PLOT DATE: 10/7/2016
PROJECT LEADER: T. FRENCH	DRAWN BY: S. SANTRICH
DESIGNED BY: H. PROTIN	CHECKED BY: P. DAVIS
PIER 1 PLAN AT EL. 108.32	SHEET 45 OF 172

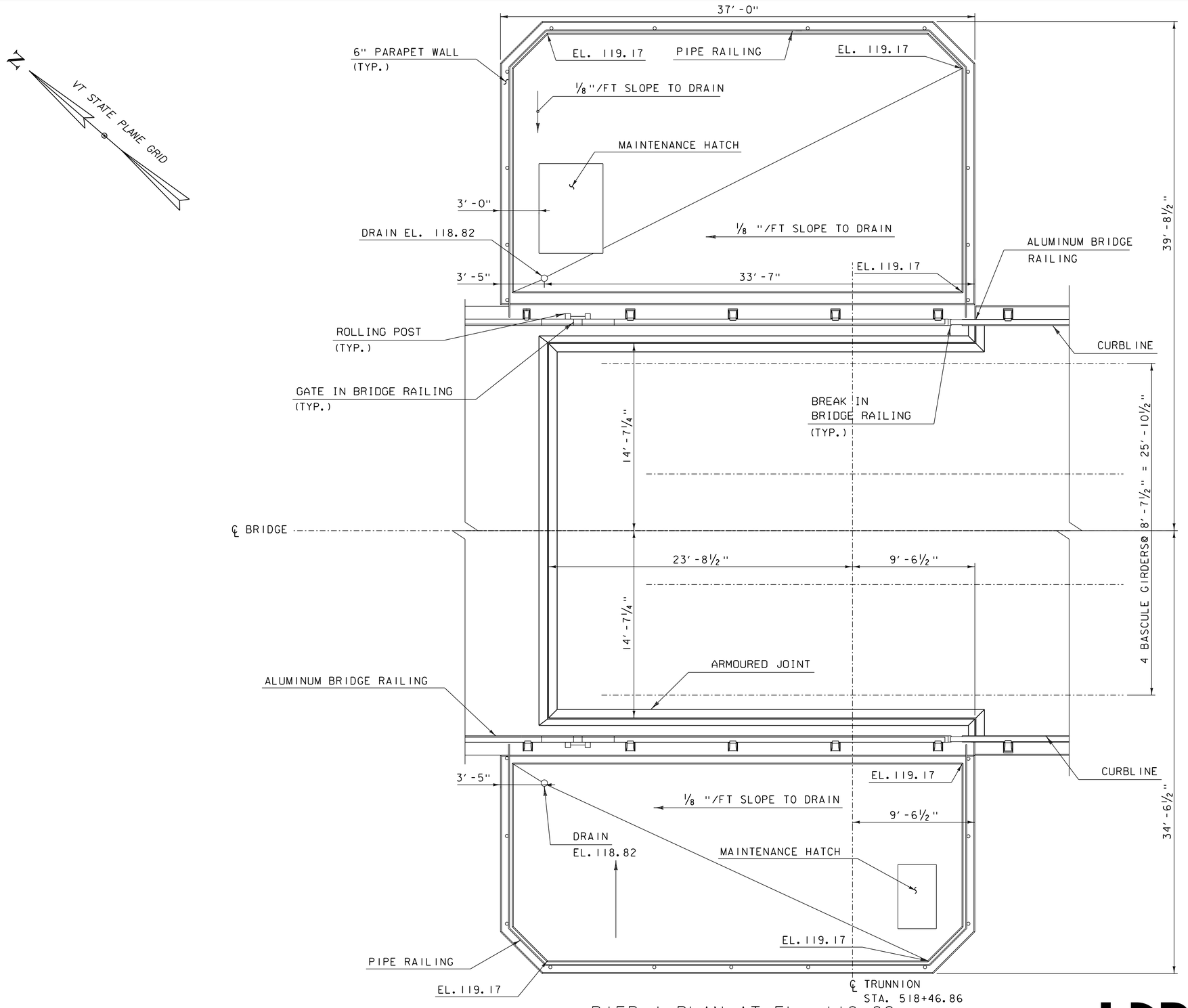

PIER 1 PLAN AT EL. 118.82

SCALE 1/4" = 1'-0"

4' 0 4'

NOTE

1. FENDER, FOOTING AND TREMIE NOT SHOWN FOR CLARITY.
2. COST OF PIPE RAILING SHALL BE INCLUDED IN PRICE BID 506.60 FOR STRUCTURAL STEEL.

PRELIMINARY PLANS

PROJECT NAME: NORTH HERO GRAND ISLE BRIDGE	
PROJECT NUMBER: BHF 028-1(26)	
FILE NAME: z12b142P1level0.dgn	PLOT DATE: 10/7/2016
PROJECT LEADER: T. FRENCH	DRAWN BY: S. SANTRICH
DESIGNED BY: H. PROTIN	CHECKED BY: P. DAVIS
PIER 1 PLAN AT EL. 118.82	SHEET 46 OF 172

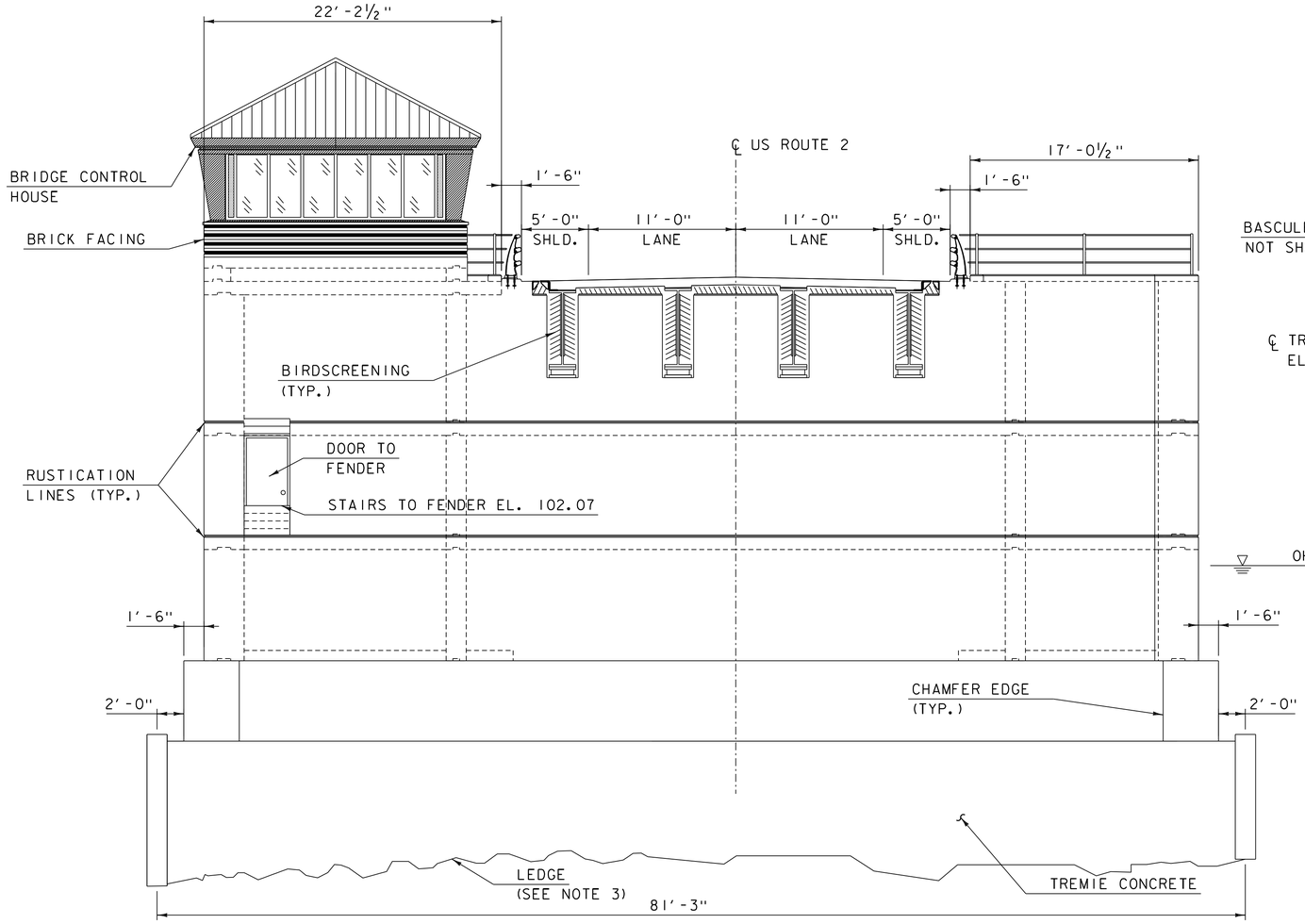

PIER 2 - WEST ELEVATION

SCALE 3/16" = 1'-0"
5.33' 0 5.33'

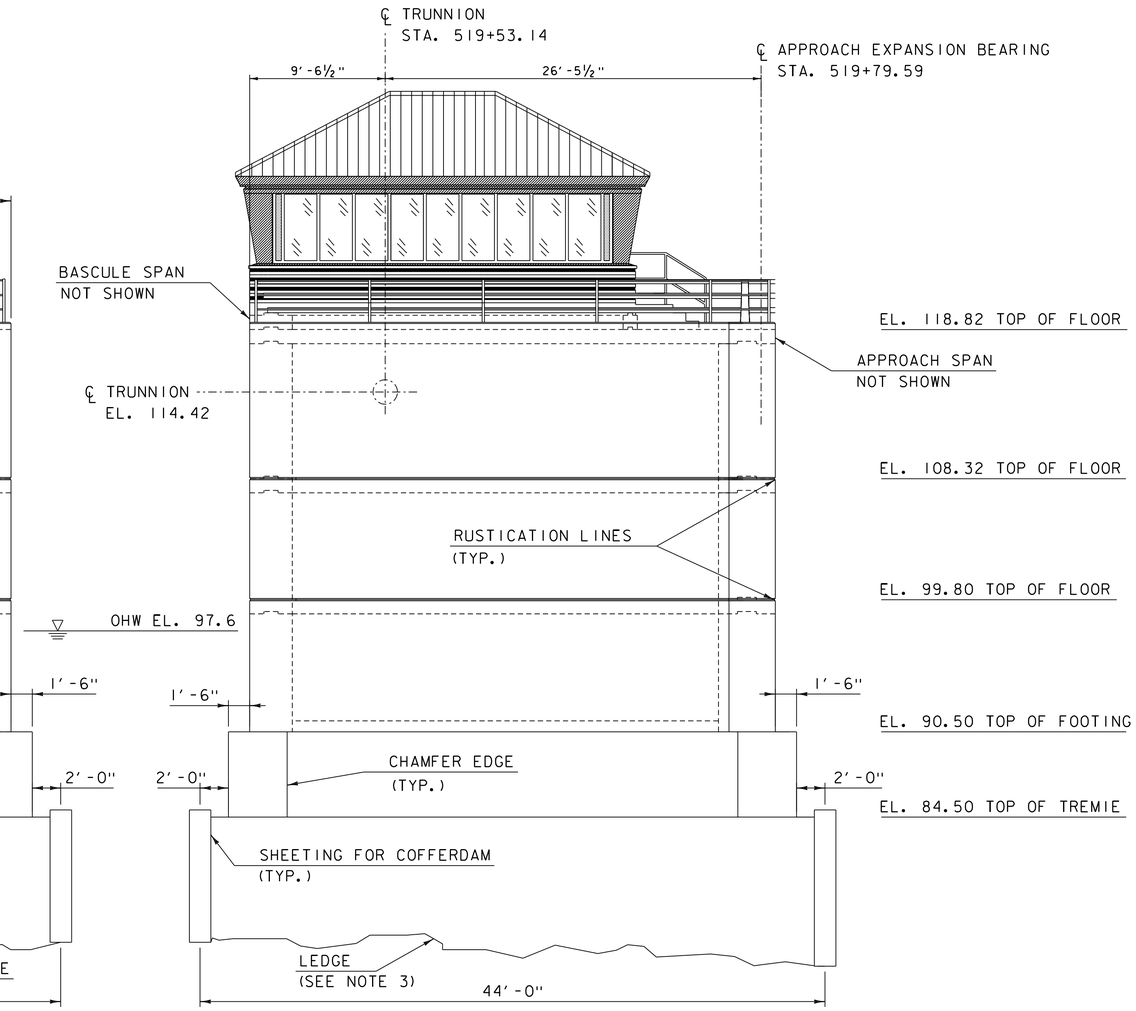

PIER 2 - SOUTH ELEVATION

SCALE 3/16" = 1'-0"
5.33' 0 5.33'

NOTE

1. FENDER SYSTEM NOT SHOWN FOR CLARITY.
2. STEEL SHEETING FOR COFFERDAM SHALL BE REMOVED BY CONTRACTOR OR CUT OFF 7 FT BELOW MUDLINE.
3. TOP OF LEDGE/BOTTOM OF TREMIE LINE AS SHOWN IS ASSUMED TO CORRESPOND WITH BOTTOM OF WEATHERED BEDROCK SHOWN IN BORING LOGS.
4. THE COST OF THE BIRD SCREEN WILL BE INCIDENTAL TO THE PRICE BID FOR THE STRUCTURAL STEEL.

PRELIMINARY PLANS

HDR

PROJECT NAME: NORTH HERO GRAND ISLE BRIDGE	
PROJECT NUMBER: BHF 028-1(26)	
FILE NAME: z12b142pierell.dgn	PLOT DATE: 10/7/2016
PROJECT LEADER: T. FRENCH	DRAWN BY: S. SANTRICH
DESIGNED BY: H. PROTIN	CHECKED BY: P. DAVIS
PIER NO. 2 ELEVATIONS - 1	SHEET 47 OF 172

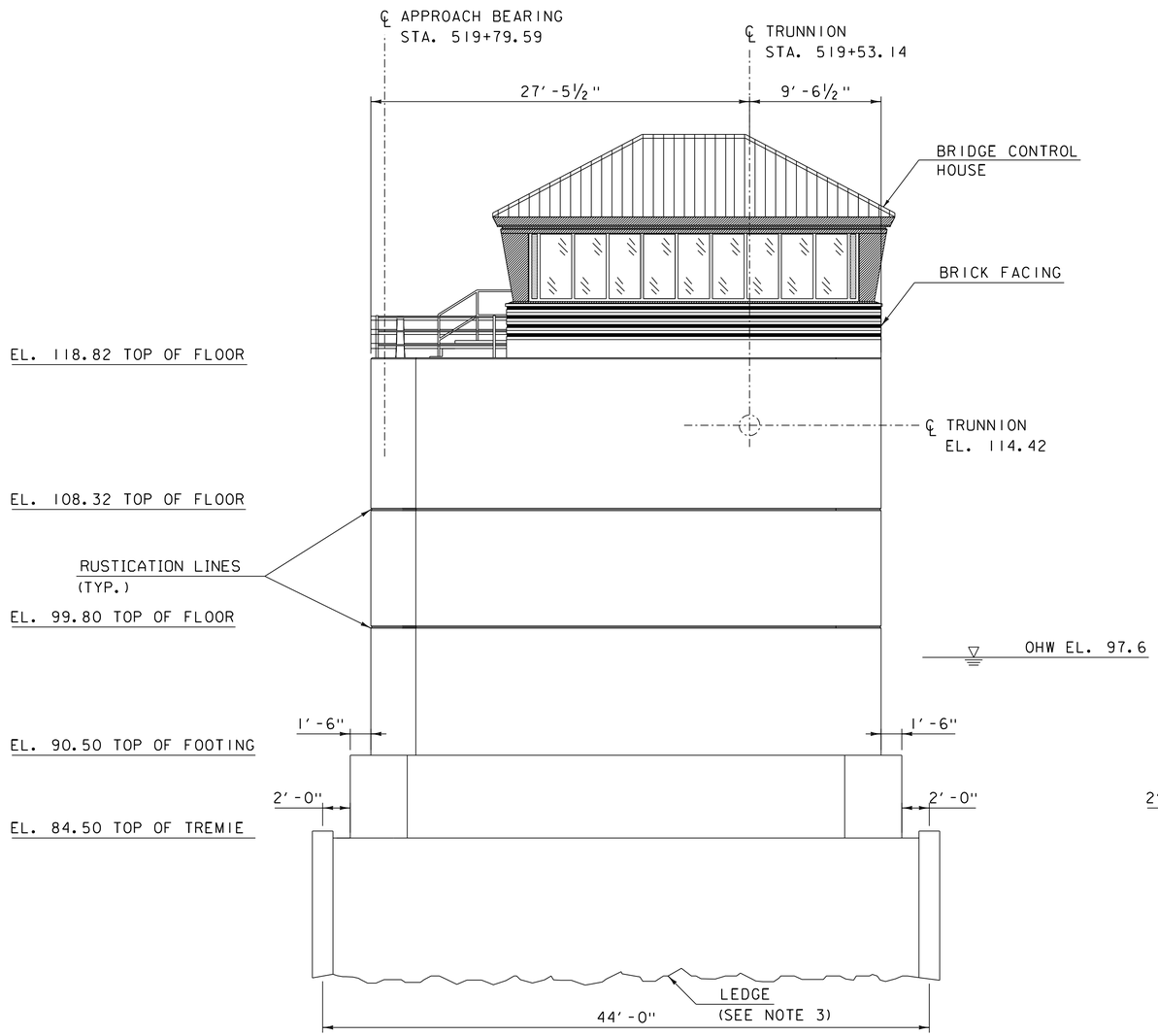

PIER 2 - NORTH ELEVATION

SCALE 3/16" = 1'-0"
5.33' 0 5.33'

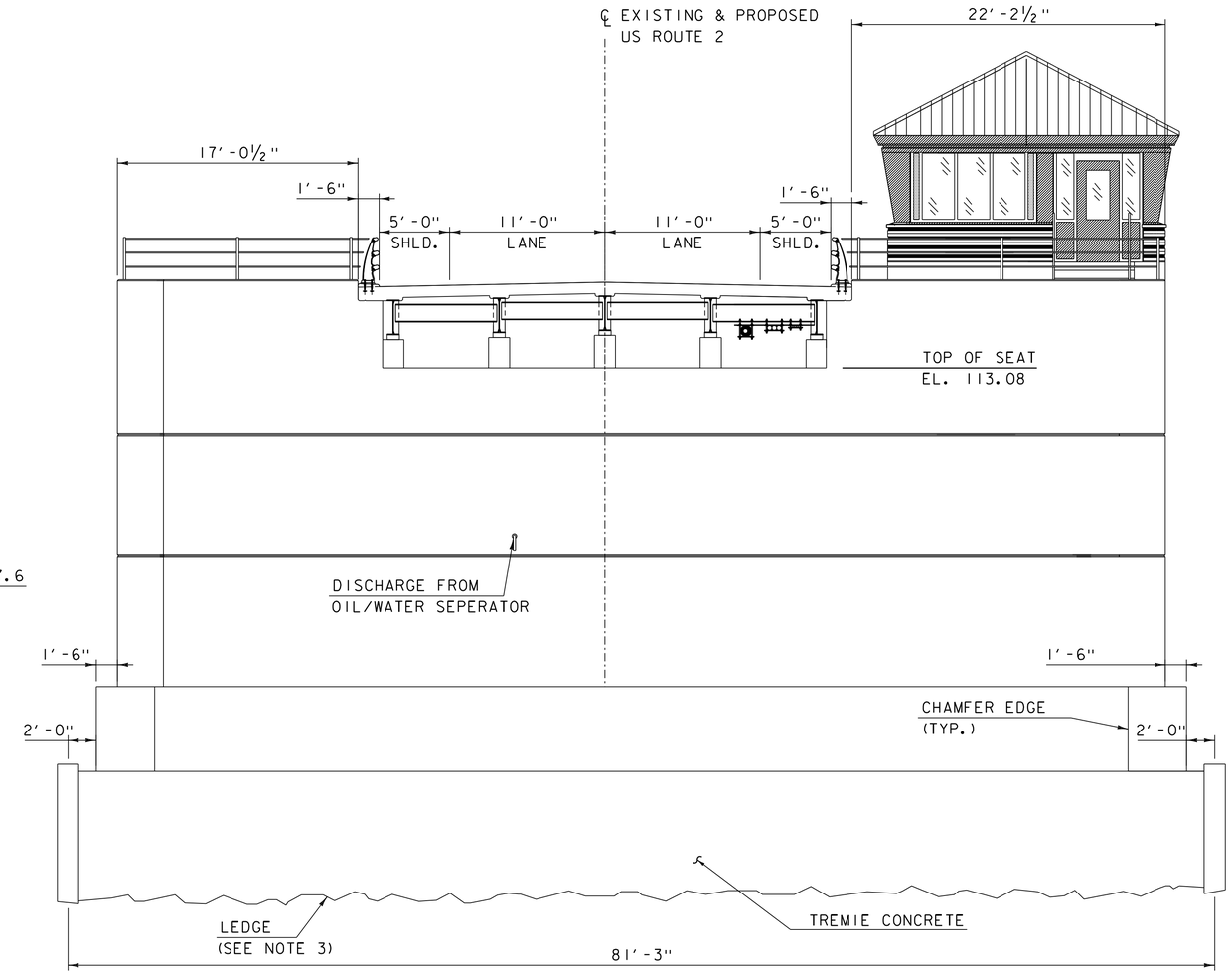

PIER 2 - EAST ELEVATION

SCALE 3/16" = 1'-0"
5.33' 0 5.33'

NOTE

1. FENDER SYSTEM NOT SHOWN FOR CLARITY.
2. STEEL SHEETING FOR COFFERDAM SHALL BE REMOVED BY CONTRACTOR OR CUT OFF 7 FT BELOW MUDLINE.
3. TOP OF LEDGE/BOTTOM OF TREMIE LINE AS SHOWN IS ASSUMED TO CORRESPOND WITH BOTTOM OF WEATHERED BEDROCK SHOWN IN BORING LOGS.

PRELIMINARY PLANS

HDR

PROJECT NAME: NORTH HERO GRAND ISLE BRIDGE	
PROJECT NUMBER: BHF 028-1(26)	
FILE NAME: z12b142pier012.dgn	PLOT DATE: 10/7/2016
PROJECT LEADER: T. FRENCH	DRAWN BY: S. SANTRICH
DESIGNED BY: H. PROTIN	CHECKED BY: P. DAVIS
PIER NO. 2 ELEVATIONS - 2	SHEET 48 OF 172

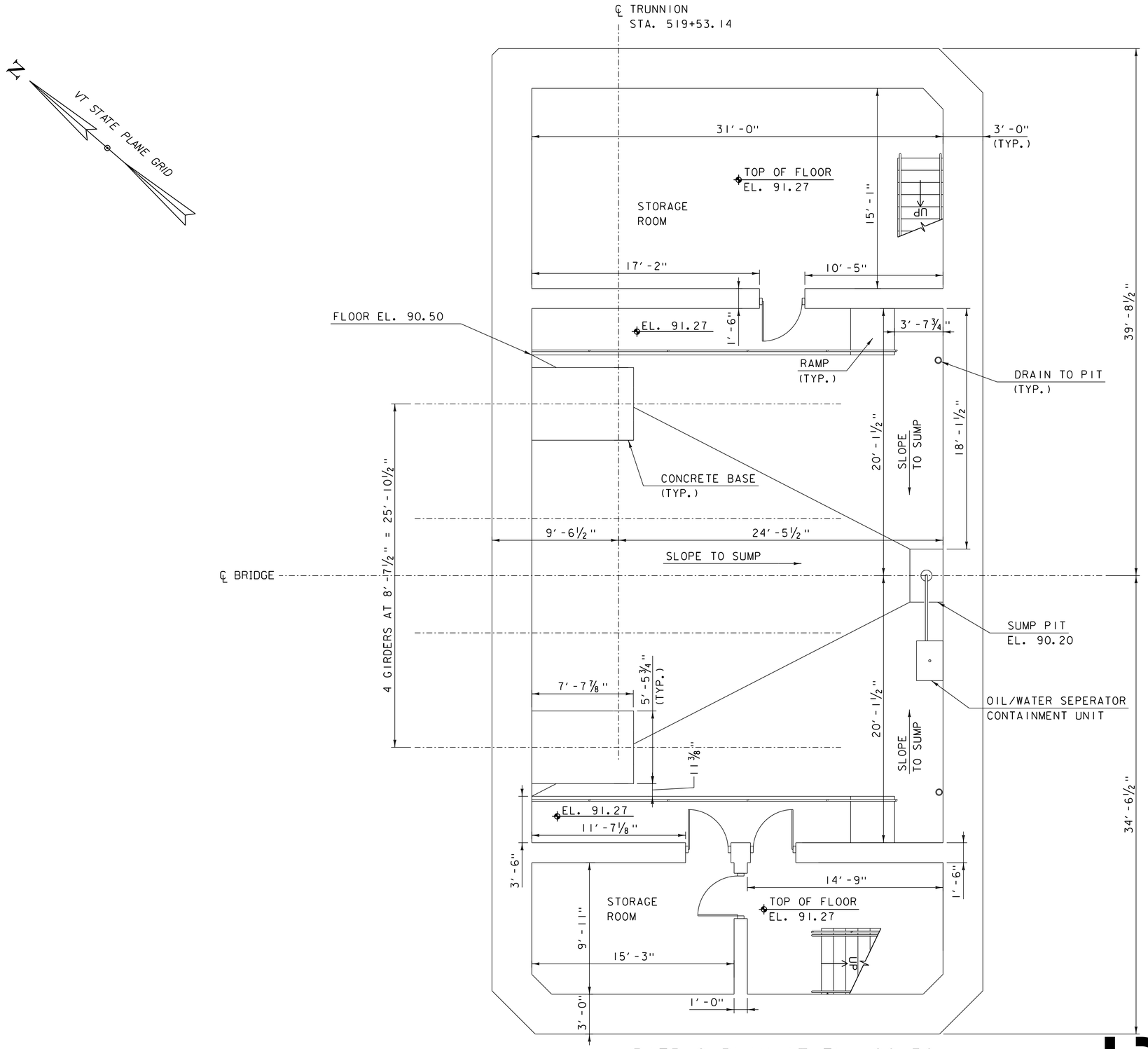

PIER 2 PLAN AT EL. 90.50

SCALE ¼" = 1'-0"

4' 0 4'

NOTE

1. FENDER, TREMIE AND FOOTING NOT SHOWN FOR CLARITY.
2. COST OF PIPE RAIL SHALL BE INCLUDED IN PRICE BID 506.60 FOR STURCTURAL STEEL.

PRELIMINARY PLANS

PROJECT NAME: NORTH HERO GRAND ISLE BRIDGE	
PROJECT NUMBER: BHF 028-1(26)	
FILE NAME: z12b142p2level3.dgn	PLOT DATE: 10/7/2016
PROJECT LEADER: T. FRENCH	DRAWN BY: S. SANTRICH
DESIGNED BY: H. PROTIN	CHECKED BY: P. DAVIS
PIER 2 PLAN AT EL. 90.50	SHEET 49 OF 172

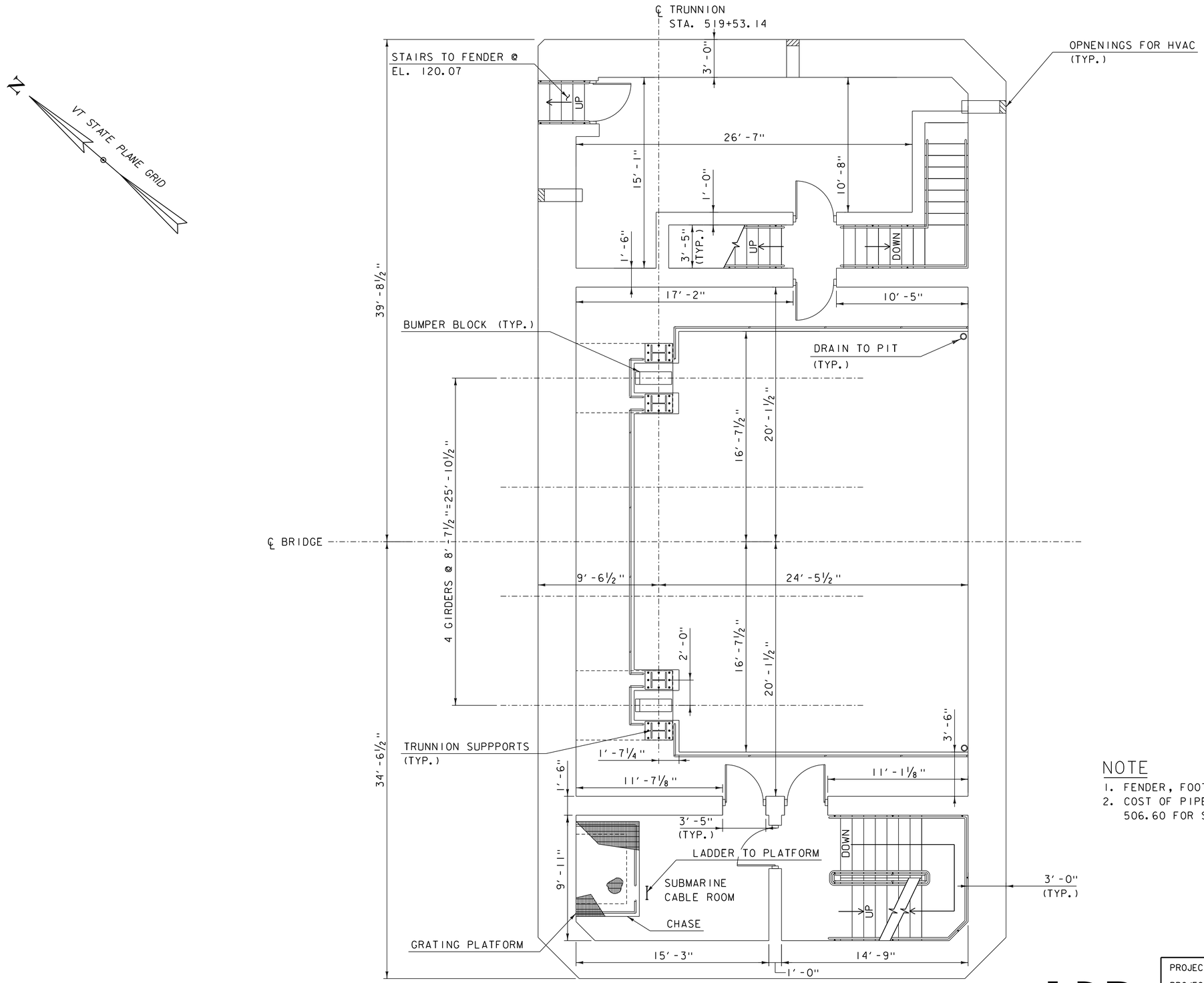

PIER 2 PLAN AT EL. 99.80

SCALE ¼" = 1'-0"

4' 0 4'

NOTE

1. FENDER, FOOTING AND TREMIE NOT SHOWN FOR CLARITY.
2. COST OF PIPE RAIL SHALL BE INCLUDED IN PRICE BID 506.60 FOR STRUCTUAL STEEL.

PRELIMINARY PLANS

PROJECT NAME:	NORTH HERO GRAND ISLE BRIDGE
PROJECT NUMBER:	BHF 028-1(26)

FILE NAME: z12b142P2level2.dgn	PLOT DATE: 10/7/2016
PROJECT LEADER: T. FRENCH	DRAWN BY: S. SANTRICH
DESIGNED BY: H. PROTIN	CHECKED BY: P. DAVIS
PIER 2 PLAN AT EL.99.80	SHEET 50 OF 172

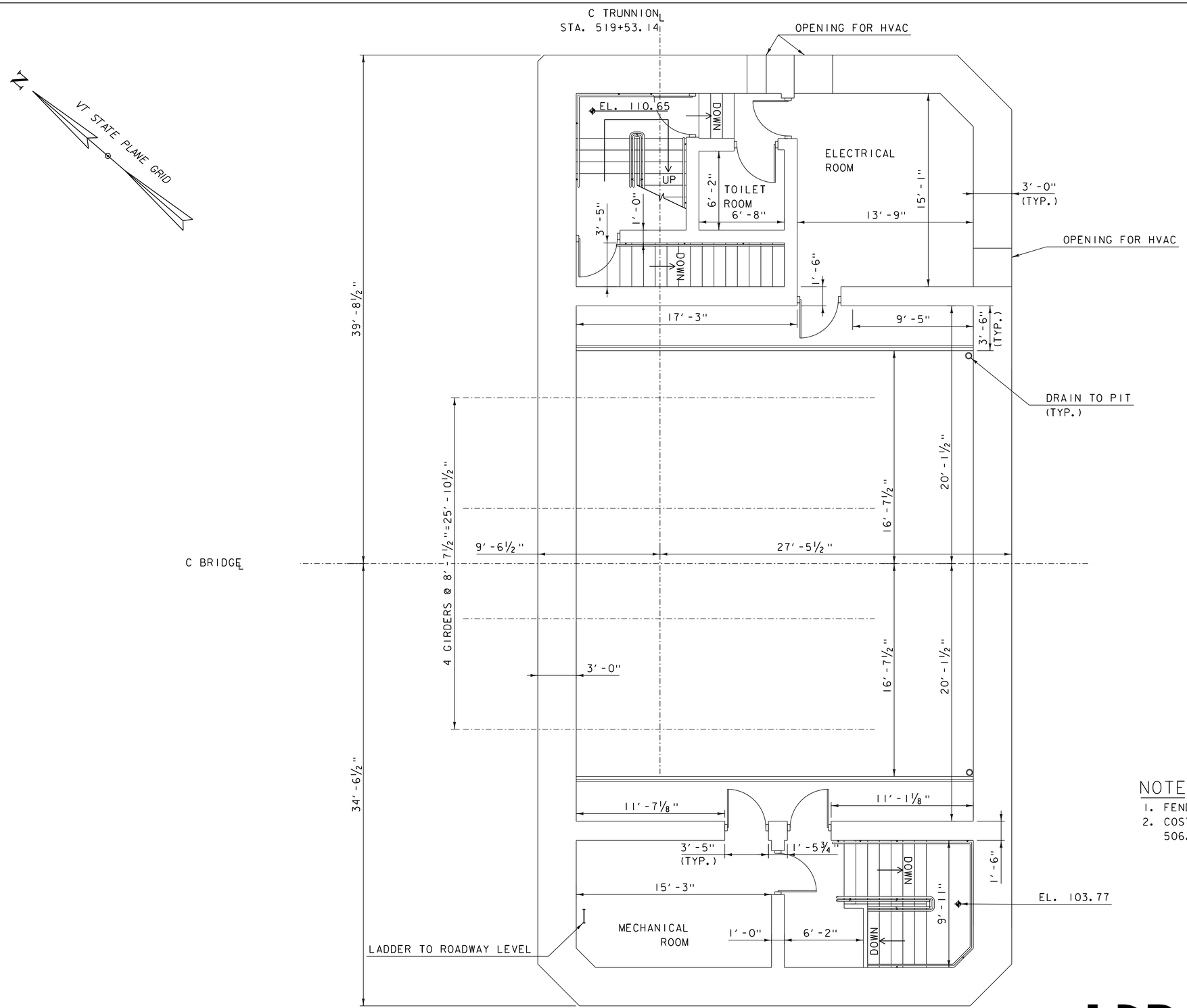

PIER 2 PLAN AT EL. 108.32

SCALE ¼" = 1'-0"

4' 0 4'

NOTE

1. FENDER, TREMIE, AND FOOTING NOT SHOWN FOR CLARITY
2. COST OF PIPE RAIL SHALL BE INCLUDED IN PRICE BID 506.60 FOR STRUCTURAL STEEL.

PRELIMINARY PLANS

PROJECT NAME: NORTH HERO GRAND ISLE BRIDGE	
PROJECT NUMBER: BHF 028-1(26)	
FILE NAME: z12b142p2level1.dgn	PLOT DATE: 10/7/2016
PROJECT LEADER: T. FRENCH	DRAWN BY: S. SANTRICH
DESIGNED BY: H. PROTIN	CHECKED BY: P. DAVIS
PIER 2 PLAN AT EL.108.32	SHEET 51 OF 172

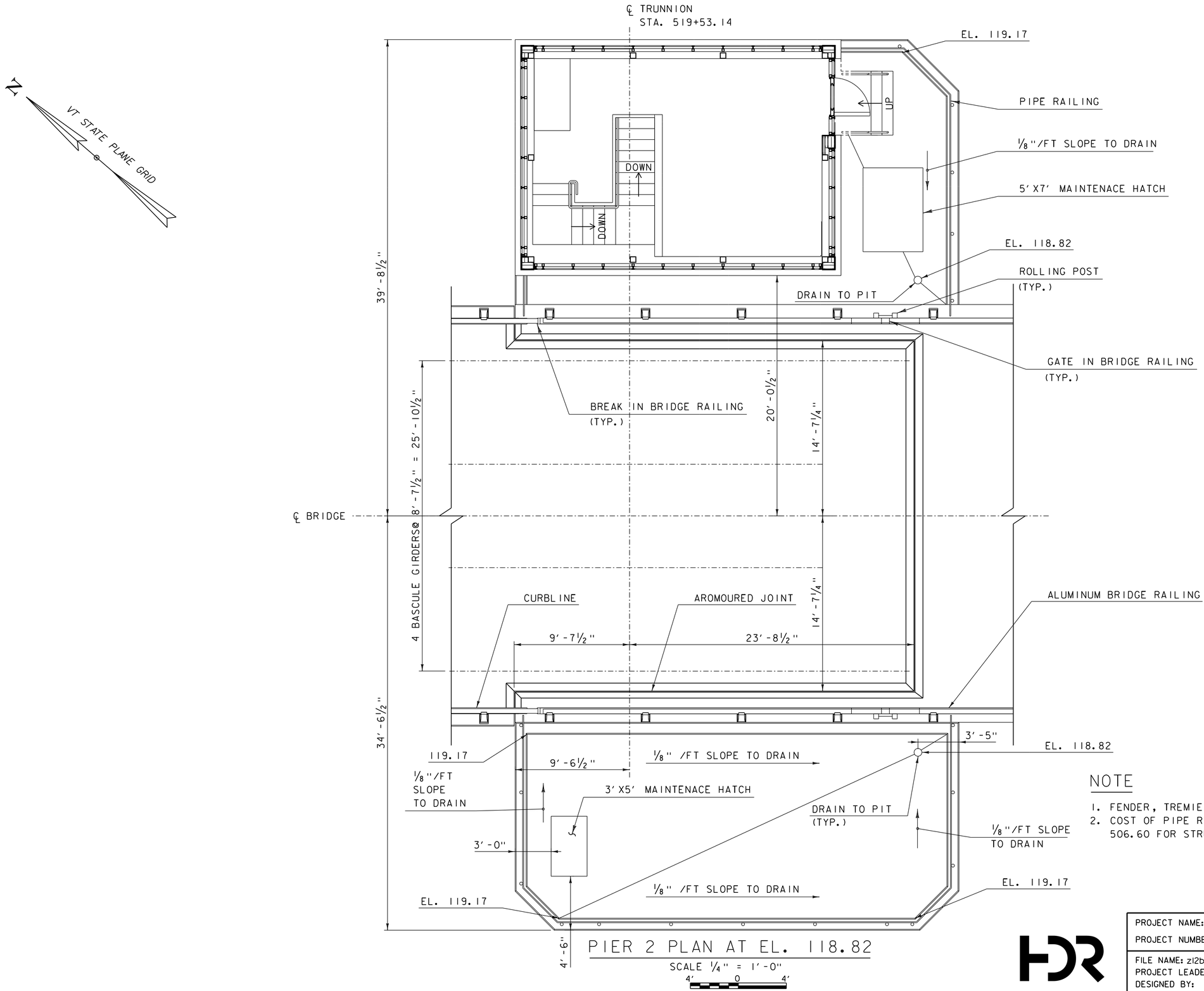

PIER 2 PLAN AT EL. 118.82

SCALE 1/4" = 1'-0"

4' 0 4'

NOTE

1. FENDER, TREMIE AND FOOTING NOT SHOWN FOR CLARITY.
2. COST OF PIPE RAIL SHALL BE INCLUDED IN PRICE BID 506.60 FOR STRUCTURAL STEEL.

PRELIMINARY PLANS

PROJECT NAME: NORTH HERO GRAND ISLE BRIDGE	
PROJECT NUMBER: BHF 028-1(26)	
FILE NAME: z12b142p2level0.dgn	PLOT DATE: 10/7/2016
PROJECT LEADER: T. FRENCH	DRAWN BY: S. SANTRICH
DESIGNED BY: H. PROTIN	CHECKED BY: P. DAVIS
PIER 2 PLAN AT EL. 118.82	SHEET 52 OF 172

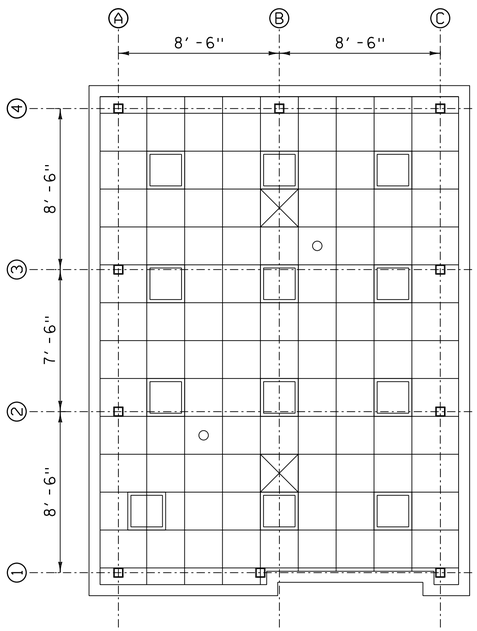

REFLECTED CEILING PLAN

SCALE 1/4" = 1'-0"

4' 0 4'

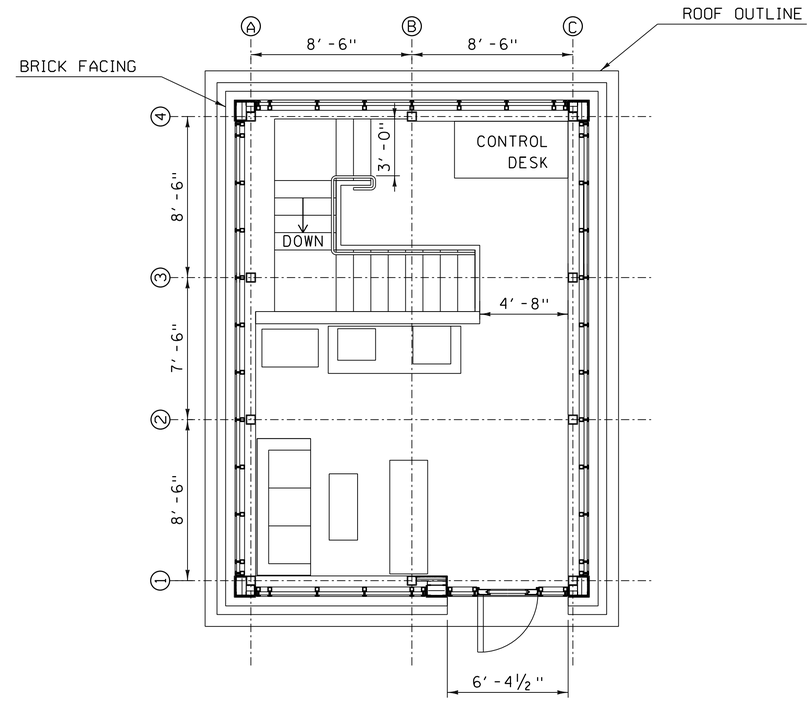

EL. 120.57 TOP OF FLOOR AT CONTROL HOUSE

CONTROL HOUSE FLOOR PLAN

SCALE 1/4" = 1'-0"

4' 0 4'

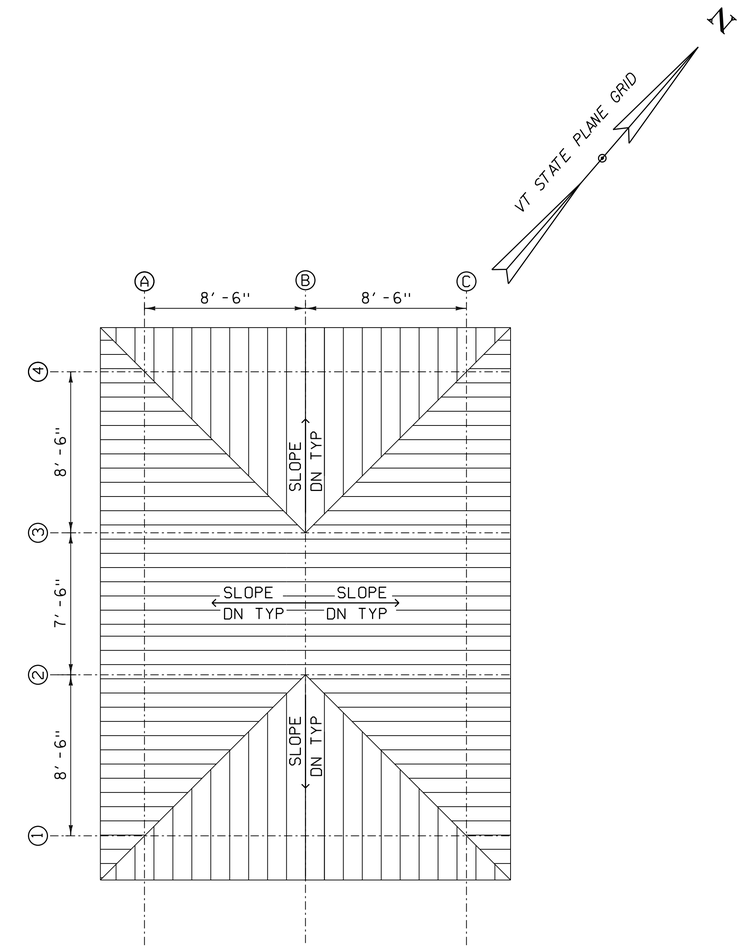

ROOF PLAN

SCALE 1/4" = 1'-0"

4' 0 4'

PRELIMINARY PLANS

HDR

PROJECT NAME:	NORTH HERO GRAND ISLE BRIDGE
PROJECT NUMBER:	BHF 028-1(26)

FILE NAME: z12b142_ch.dgn	PLOT DATE: 10/7/2016
PROJECT LEADER: T. FRENCH	DRAWN BY: S. SANTRICH
DESIGNED BY: H. PROTIN	CHECKED BY: J. PESA
CONTROL HOUSE PLAN VIEWS	SHEET 53 OF 172

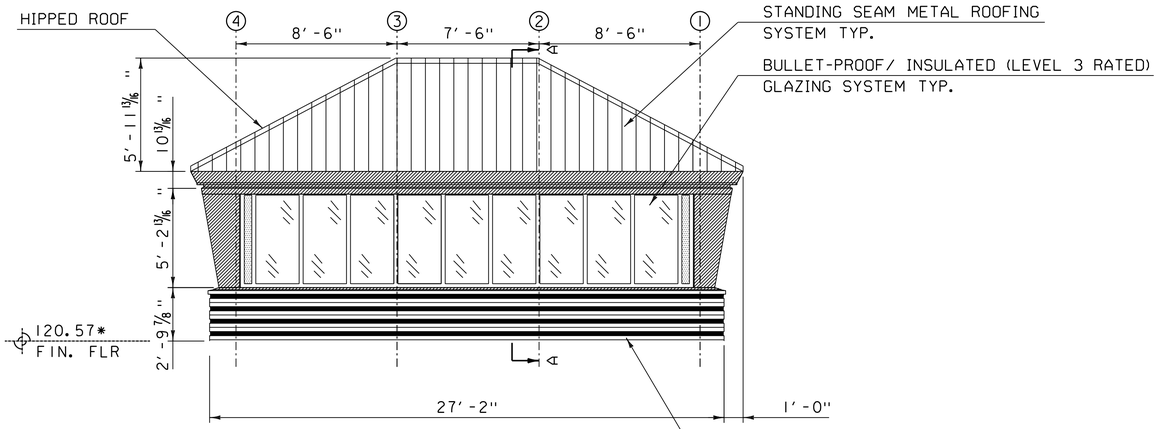

SIDE VIEW

SCALE 1/4" = 1'-0"

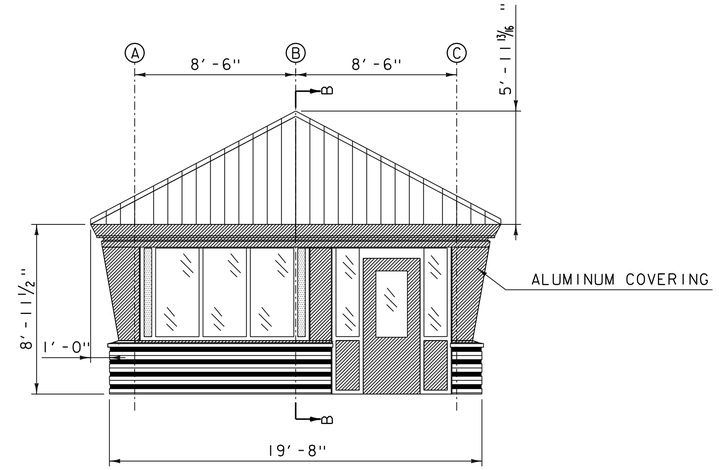

FRONT VIEW

SCALE 1/4" = 1'-0"

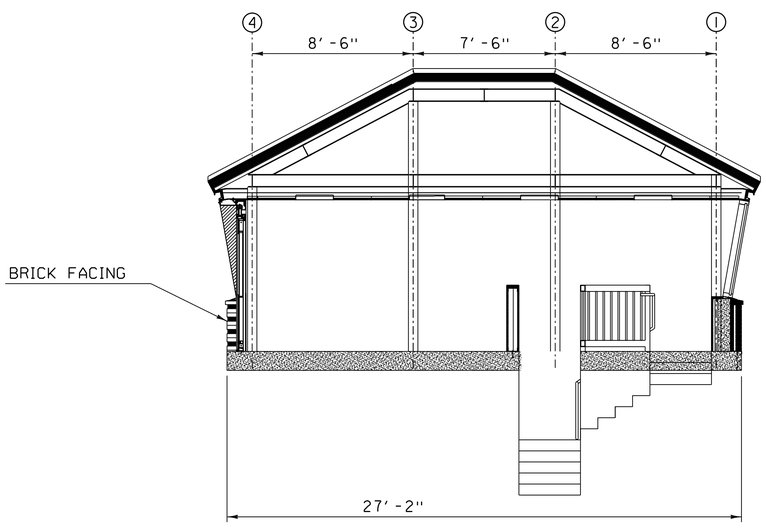

SECTION B-B

SCALE 1/4" = 1'-0"

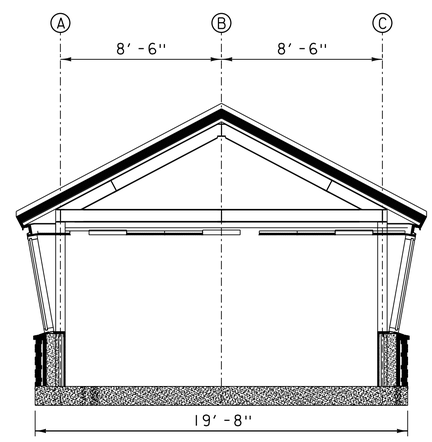

SECTION A-A

SCALE 1/4" = 1'-0"

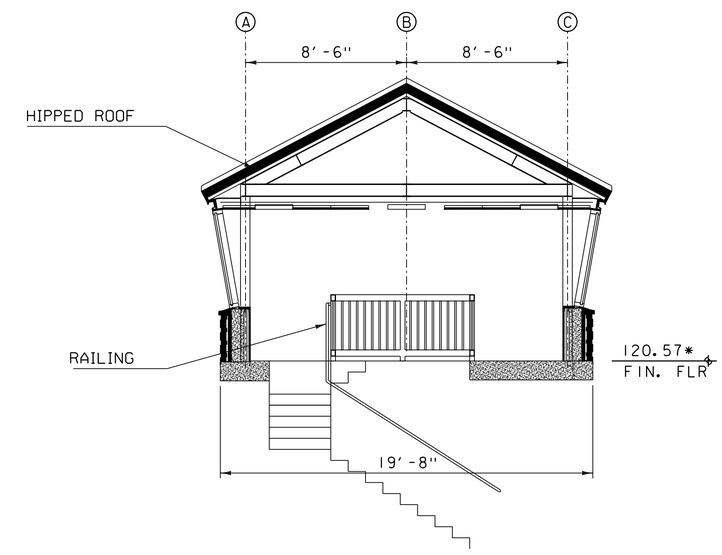

SECTION FACING WATER

SCALE 1/4" = 1'-0"

PRELIMINARY PLANS

PROJECT NAME: NORTH HERO GRAND ISLE BRIDGE	
PROJECT NUMBER: BHF 028-1(26)	
FILE NAME: z12b142_chelev.dgn	PLOT DATE: 10/7/2016
PROJECT LEADER: T. FRENCH	DRAWN BY: J. PESA
DESIGNED BY: H. PROTIN	CHECKED BY: P. DAVIS
CONTROL HOUSE CROSS SECTIONS	SHEET 54 OF 172

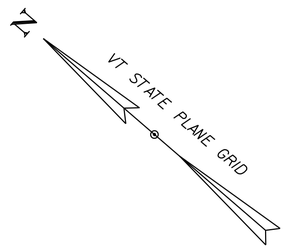

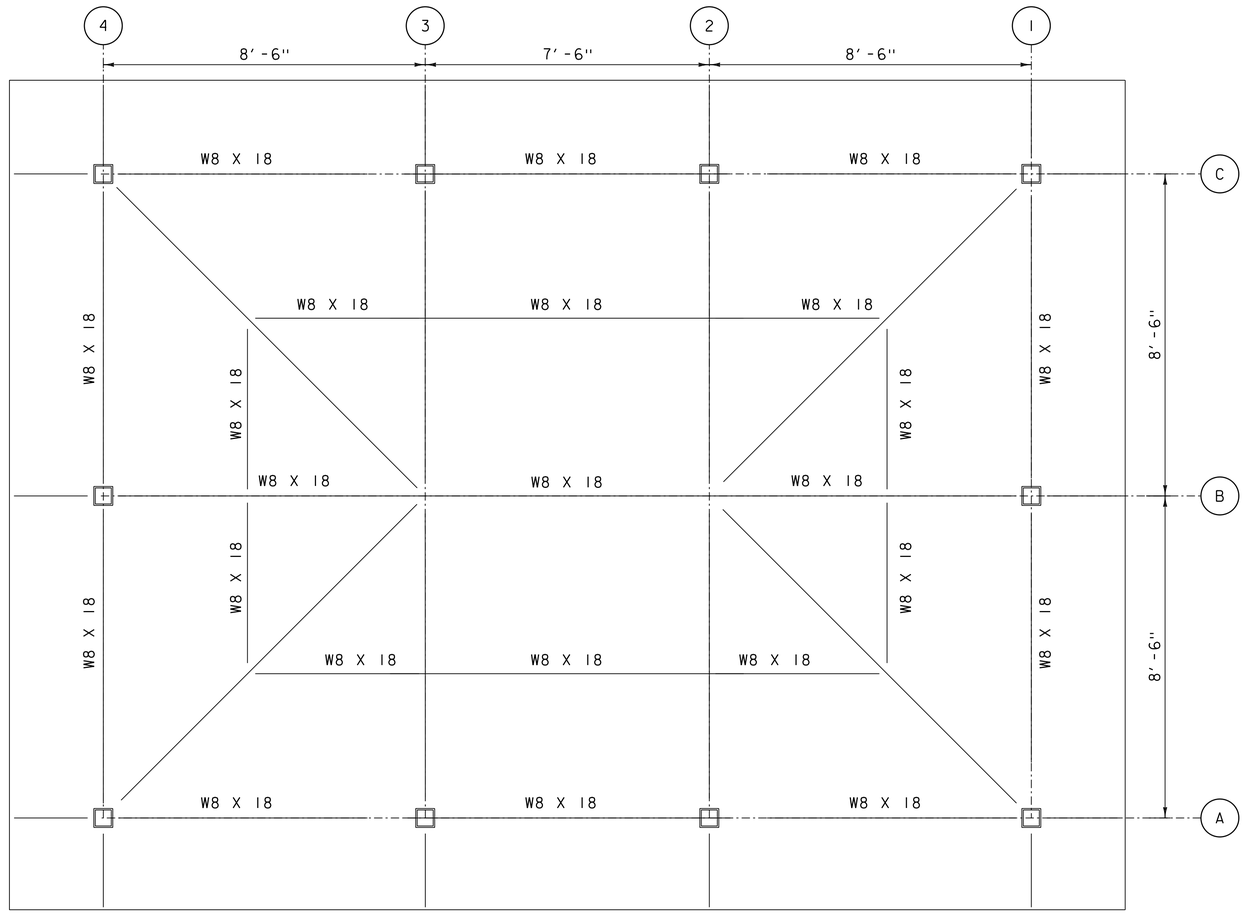

CONTROL HOUSE FRAMING PLAN

SCALE ½" = 1'-0"

2' 0 2'

PRELIMINARY PLANS

PROJECT NAME:	NORTH HERO GRAND ISLE BRIDGE
PROJECT NUMBER:	BHF 028-1(26)

FILE NAME: z12b142_framing.dgn	PLOT DATE: 10/7/2016
PROJECT LEADER: T. FRENCH	DRAWN BY: S. SANTRICH
DESIGNED BY: H. PROTIN	CHECKED BY: P. DAVIS
CONTROL HOUSE FRAMING PLAN	SHEET 55 OF 172

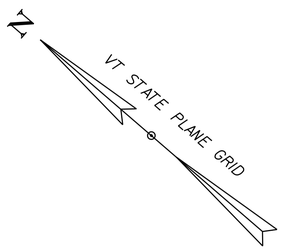

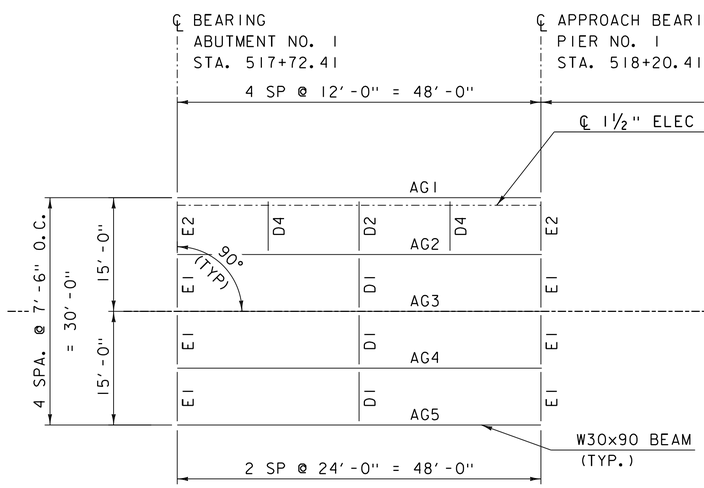

WEST APPROACH SPAN FRAMING PLAN

SCALE 1" = 10'-0"

10 0 10

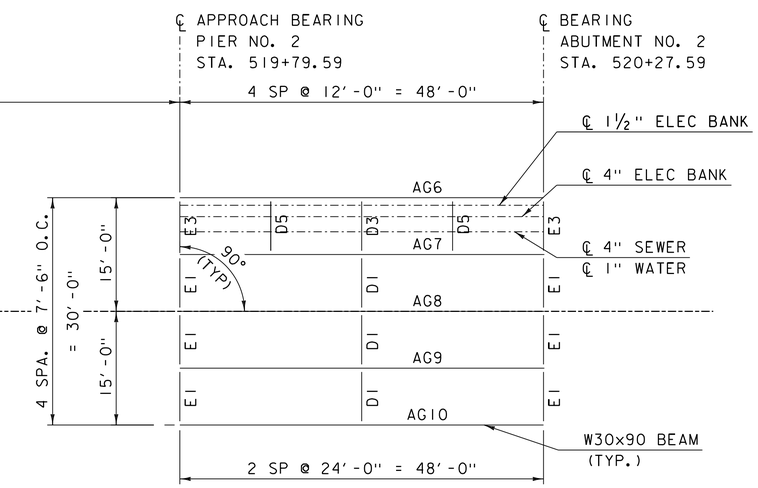

EAST APPROACH SPAN FRAMING PLAN

SCALE 1" = 10'-0"

10 0 10

PRELIMINARY PLANS

HDR

PROJECT NAME: NORTH HERO GRAND ISLE BRIDGE	
PROJECT NUMBER: BHF 028-1(26)	
FILE NAME: z12b142frameapp.dgn	PLOT DATE: 10/7/2016
PROJECT LEADER: T. FRENCH	DRAWN BY: P. LEFEBVRE
DESIGNED BY: P. LEFEBVRE	CHECKED BY: M. MOZER
APPROACH SPAN FRAMING PLAN	SHEET 56 OF 172

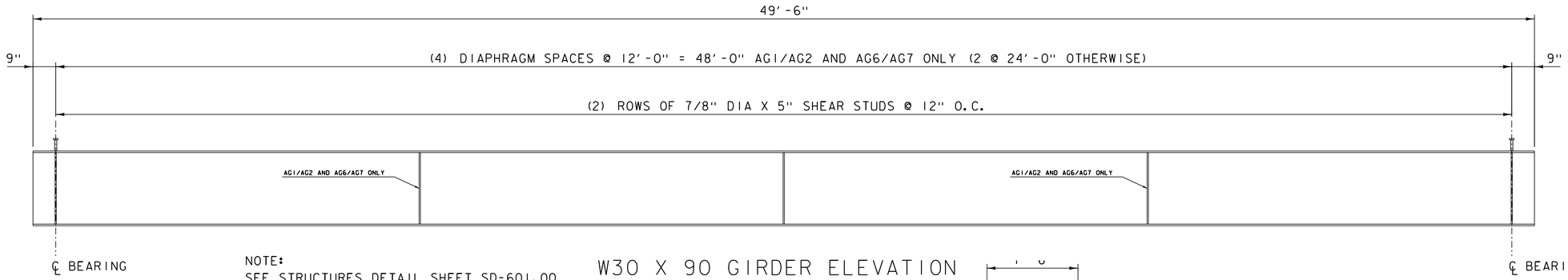

NOTE:
SEE STRUCTURES DETAIL SHEET SD-601.00
FOR ADDITIONAL STRUCTURAL STEEL DETAILS

W30 X 90 GIRDER ELEVATION

SCALE: 1/2" = 1'-0"

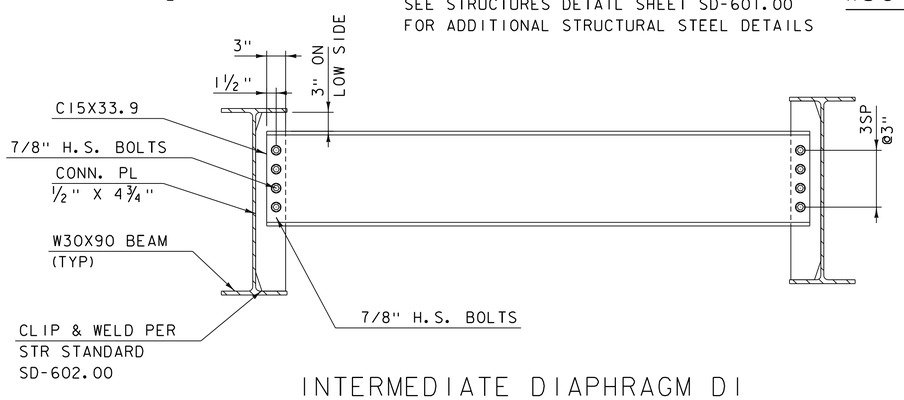

INTERMEDIATE DIAPHRAGM D1

SCALE: 1" = 1'-0"

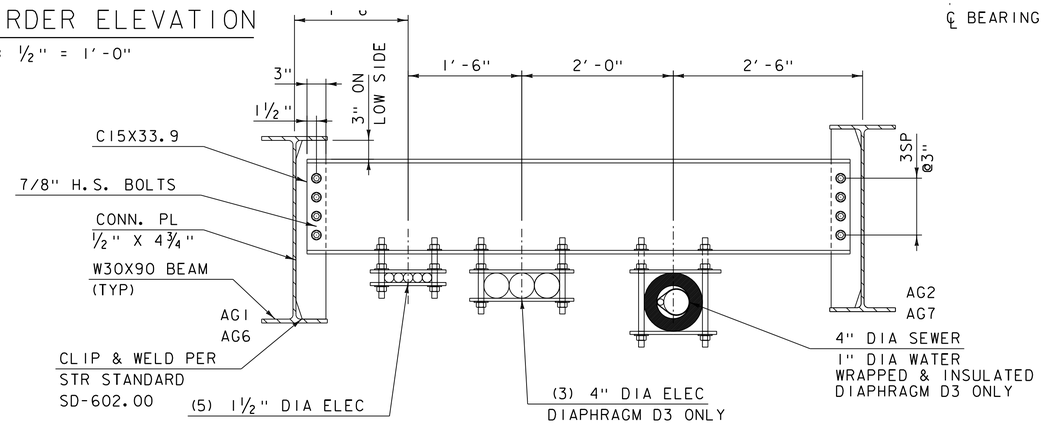

INTERMEDIATE DIAPHRAGM D2/D3

SCALE: 1" = 1'-0"

NOTE: INTERMEDIATE DIAPHRAGM CONNECTIONS
SHALL BE PER STRUCTURES DETAIL SD-602.00
EXCEPT AS SHOWN

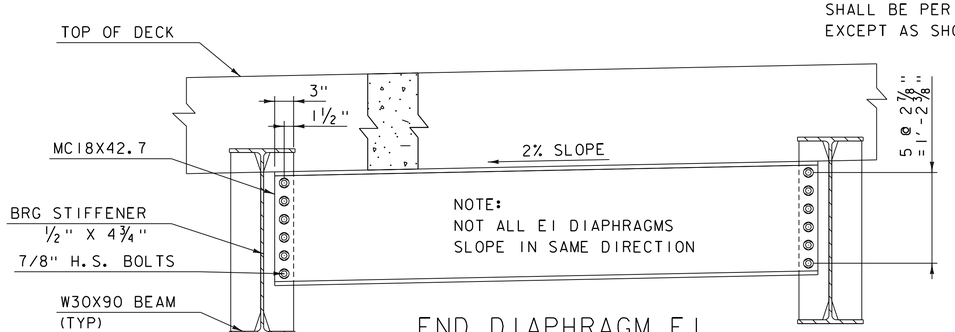

END DIAPHRAGM E1

SCALE: 1" = 1'-0"

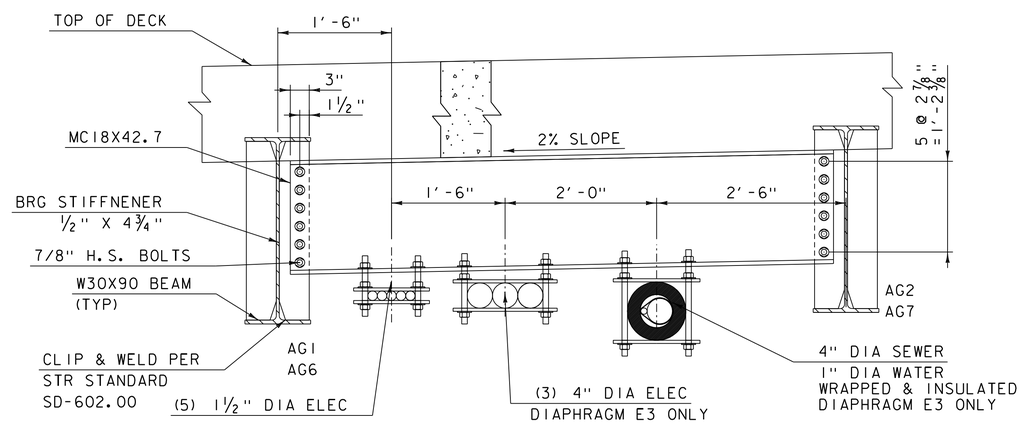

END DIAPHRAGM E2/E3

SCALE: 1" = 1'-0"

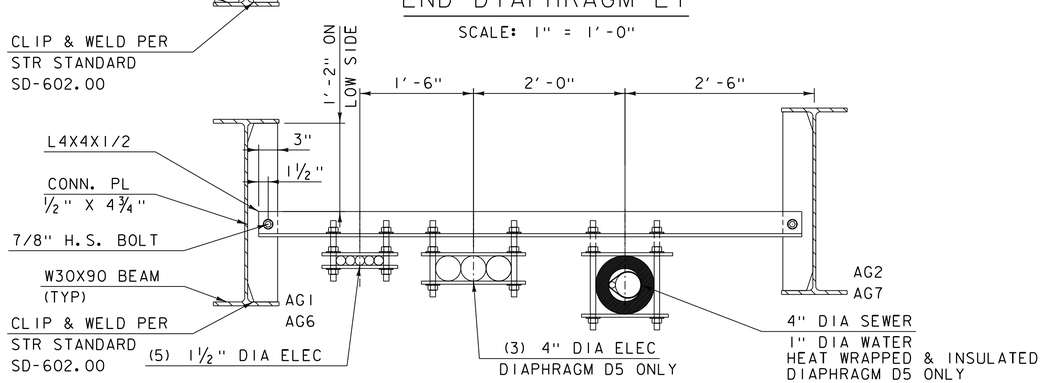

UTILITY SUPPORT D4/D5

SCALE: 1" = 1'-0"

PRELIMINARY PLANS

PROJECT NAME: NORTH HERO GRAND ISLE BRIDGE	
PROJECT NUMBER: BHF 028-1(26)	
FILE NAME: z12b142apgirdet.dgn	PLOT DATE: 10/7/2016
PROJECT LEADER: T. FRENCH	DRAWN BY: P. LEFEBVRE
DESIGNED BY: P. LEFEBVRE	CHECKED BY: M. MOZER
APPROACH SPAN GIRDER DETAILS	SHEET 57 OF 172

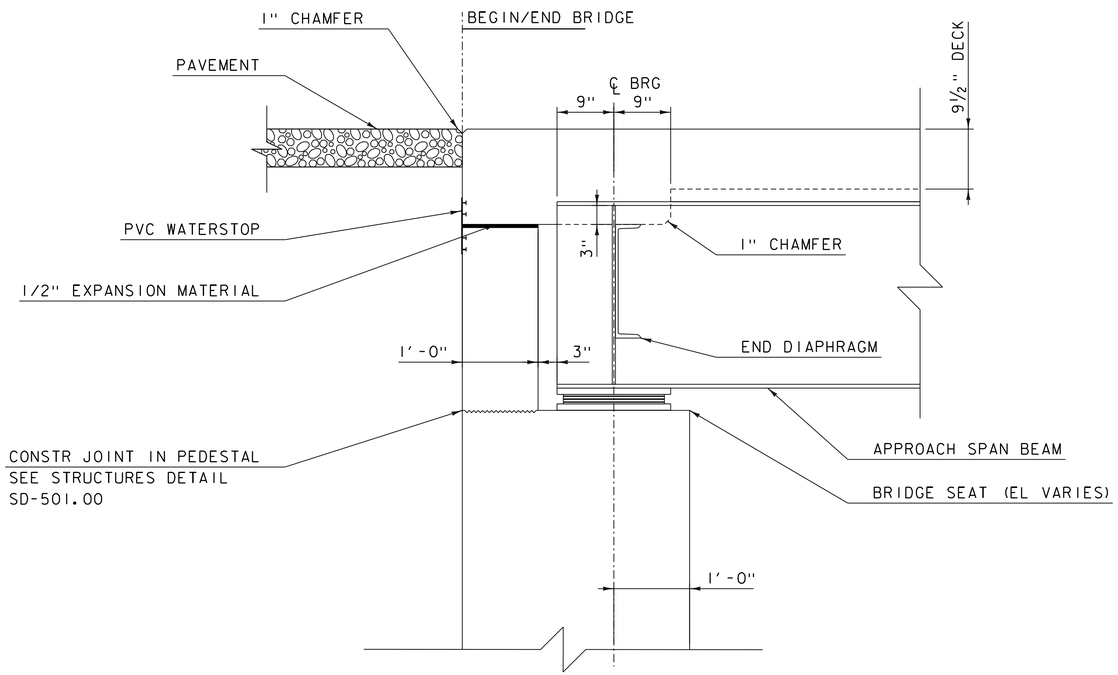

ABUTMENT JOINT DETAIL

SCALE 1" = 1'-0"

1' 0 1'

PRELIMINARY PLANS

PROJECT NAME:	NORTH HERO GRAND ISLE BRIDGE
PROJECT NUMBER:	BHF 028-1(26)

FILE NAME: z12b142apjntdet.dgn	PLOT DATE: 10/7/2016
PROJECT LEADER: T. FRENCH	DRAWN BY: P. LEFEBVRE
DESIGNED BY: P. LEFEBVRE	CHECKED BY: M. MOZER
APPROACH SPAN JOINT DETAILS	SHEET 58 OF 172

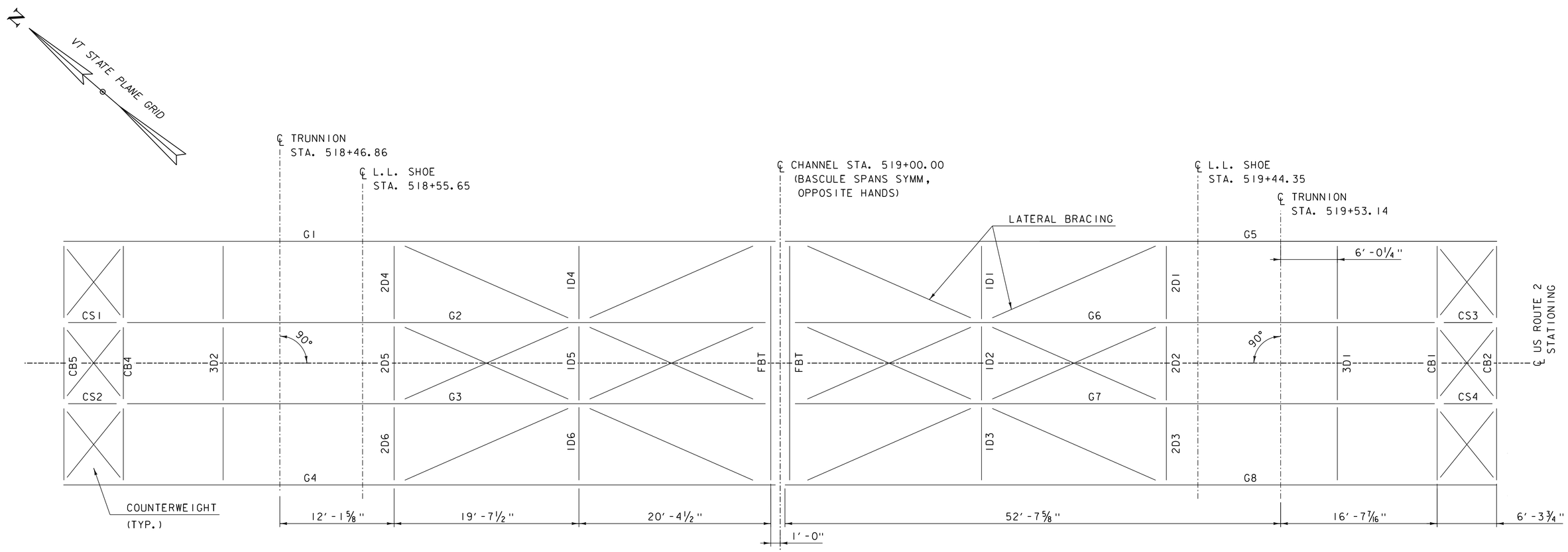

BASCULE SPAN FRAMING PLAN

SCALE 3/16" = 1'-0"

5.33' 0 5.33'

PRELIMINARY PLANS

PROJECT NAME:	NORTH HERO GRAND ISLE BRIDGE
PROJECT NUMBER:	BHF 028-1(26)

FILE NAME: z12b142framemov.dgn	PLOT DATE: 10/7/2016
PROJECT LEADER: T. FRENCH	DRAWN BY: S. SANTRICH
DESIGNED BY: H. PROTIN	CHECKED BY: P. DAVIS
BASCULE SPAN FRAMING PLAN	SHEET 59 OF 172

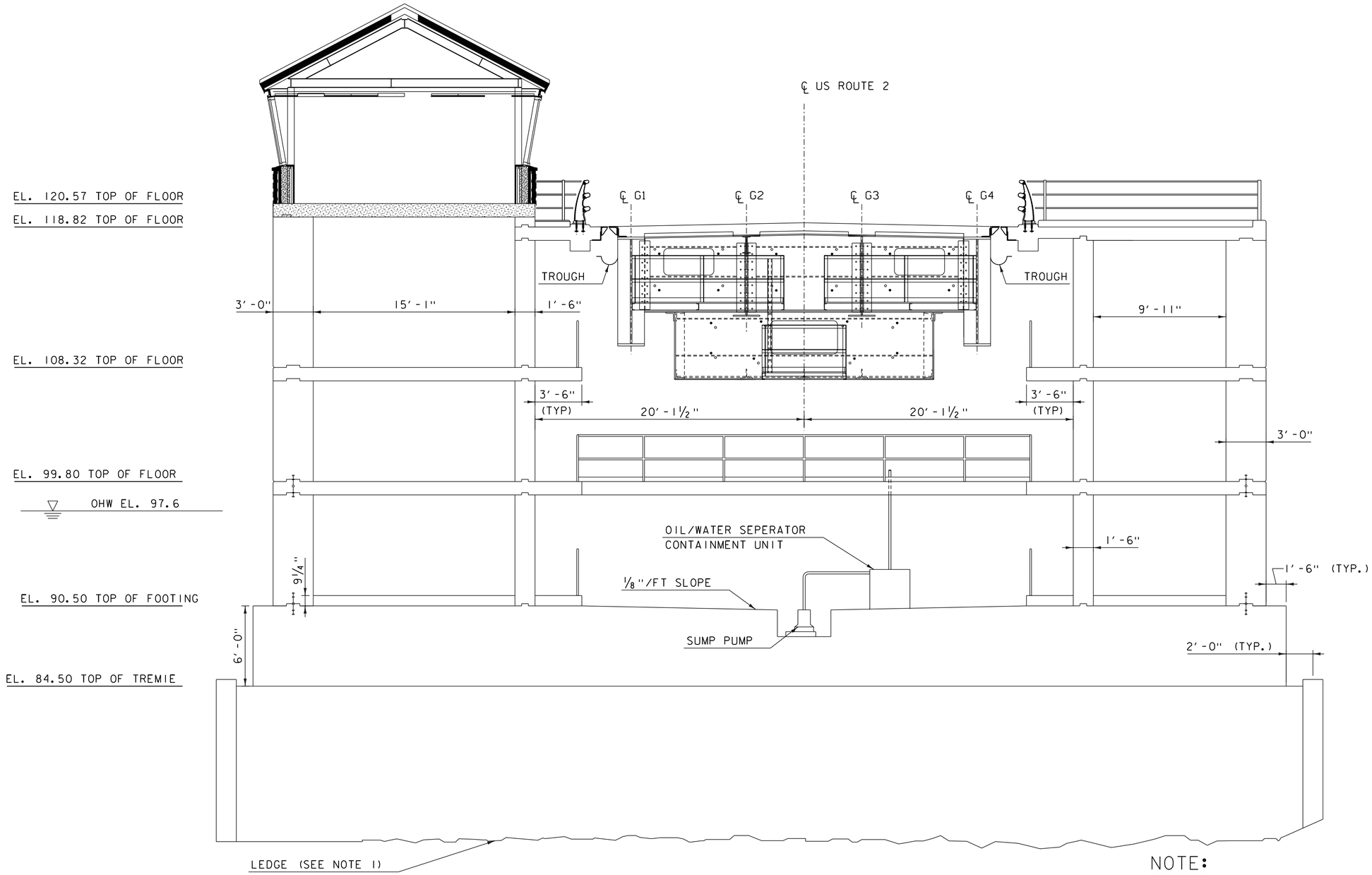

NOTE:

1. TOP OF LEDGE/BOTTOM OF TREMIE LINE AS SHOWN IS ASSUMED TO CORRESPOND WITH BOTTOM OF WEATHERED BEDROCK SHOWN IN BORING LOGS.

PRELIMINARY PLANS

TYPICAL TRANSVERSE SECTION AT BASCULE PIER 2

SCALE ¼" = 1'-0"

4' 0 4'

PROJECT NAME: NORTH HERO GRAND ISLE BRIDGE	
PROJECT NUMBER: BHF 028-1(26)	
FILE NAME: z12b142pierxs2.dgn	PLOT DATE: 10/7/2016
PROJECT LEADER: T. FRENCH	DRAWN BY: S. SANTRICH
DESIGNED BY: H. PROTIN	CHECKED BY: P. DAVIS
BASCULE SPAN TRANSVERSE SECTION	SHEET 60 OF 172

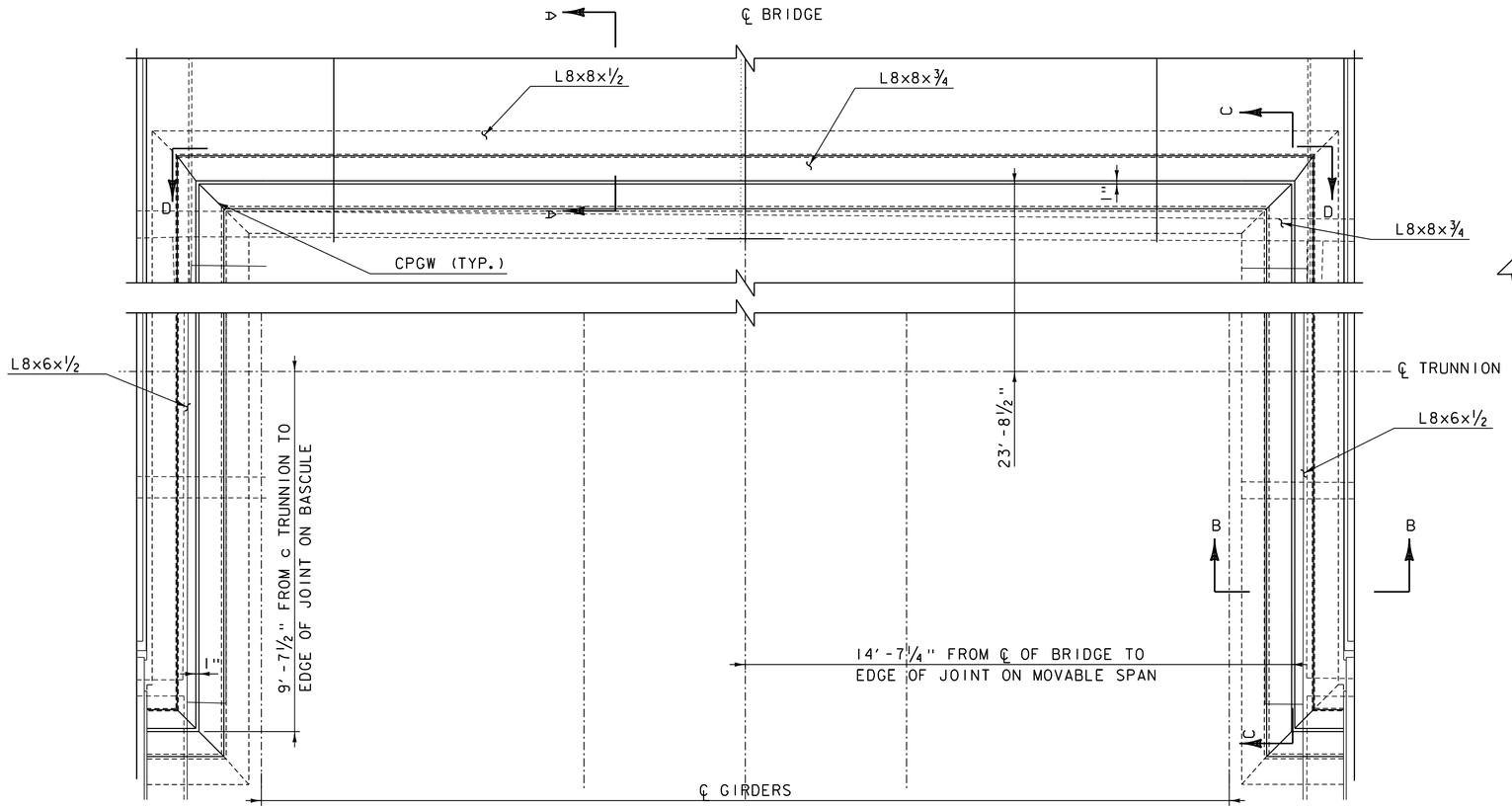

REAR ROAD BREAK PLAN

PIER 1 SHOWN, PIER 2 OPPOSITE HAND

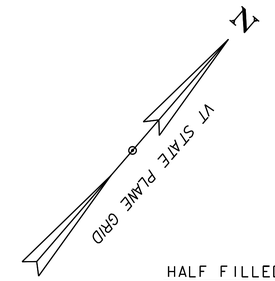

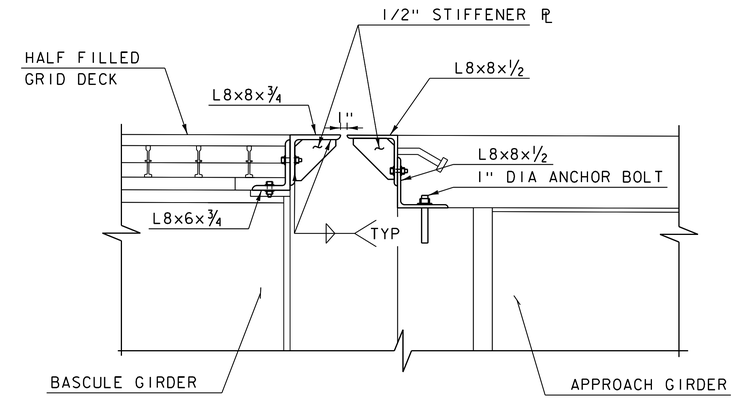

SECTION A-A

SCALE ¼" = 1'-0"

4' 0 4'

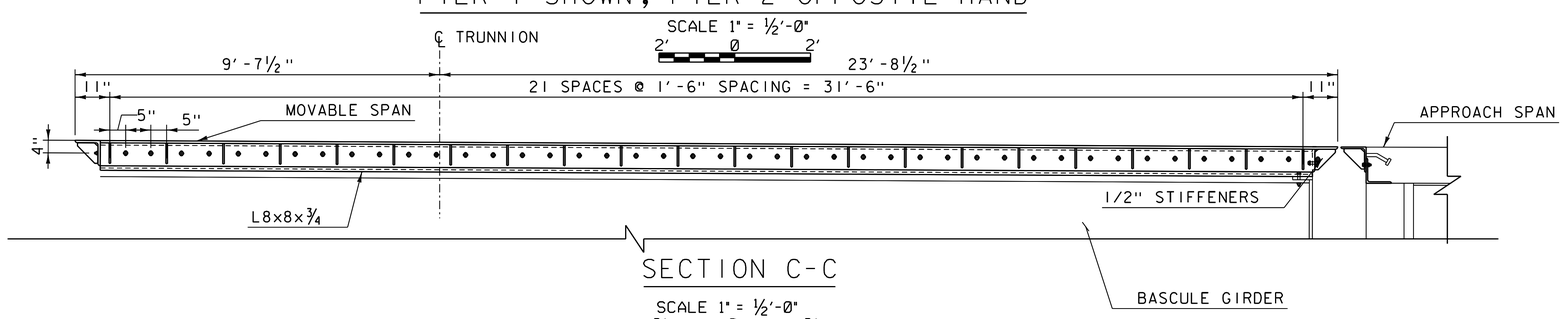

SCALE 1" = ½'-0"

2' 0 2'

SECTION C-C

SCALE 1" = ½'-0"

2' 0 2'

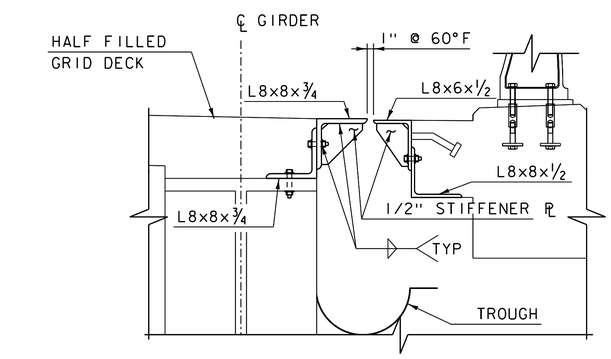

SECTION B-B

SCALE ¼" = 1'-0"

4' 0 4'

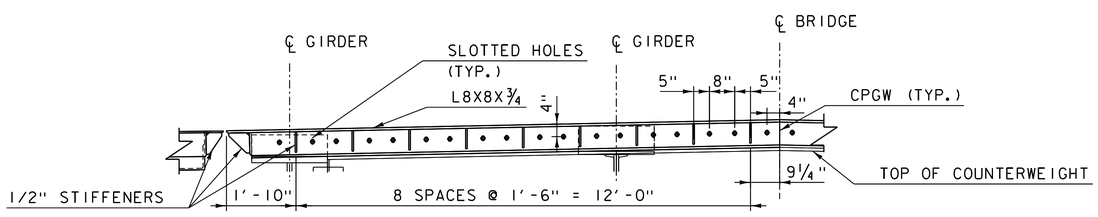

SECTION D-D

(SYM. ABOUT ℄ OF BRIDGE)

SCALE 1" = ½'-0"

2' 0 2'

PRELIMINARY PLANS

HDR

PROJECT NAME: NORTH HERO GRAND ISLE BRIDGE	
PROJECT NUMBER: BHF 028-1(26)	
FILE NAME: z12b142jointdtl.dgn	PLOT DATE: 10/7/2016
PROJECT LEADER: T. FRENCH	DRAWN BY: S. SANTRICH
DESIGNED BY: H. PROTIN	CHECKED BY: P. DAVIS
BASCULE JOINT DETAILS 1	SHEET 61 OF 172

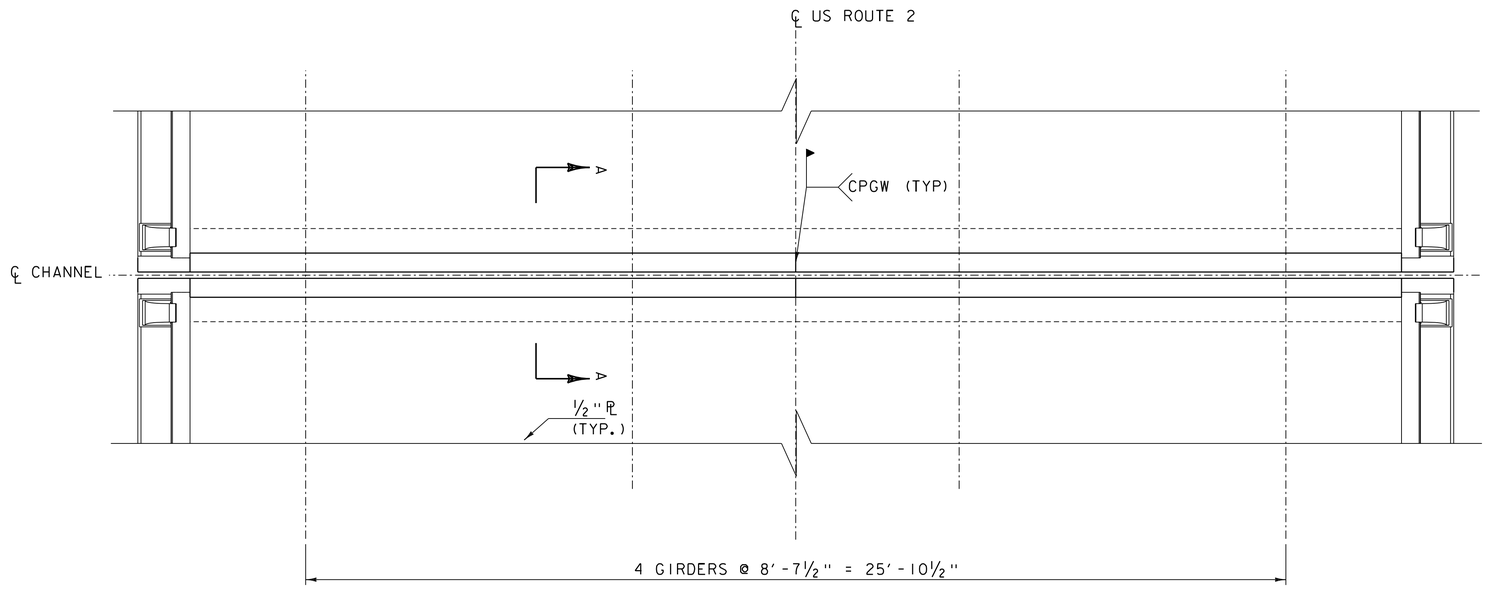

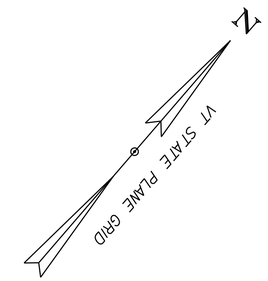

PLAN OF FORWARD ROAD BREAK

SCALE 1/2" = 1'-0"
2' 0 2'

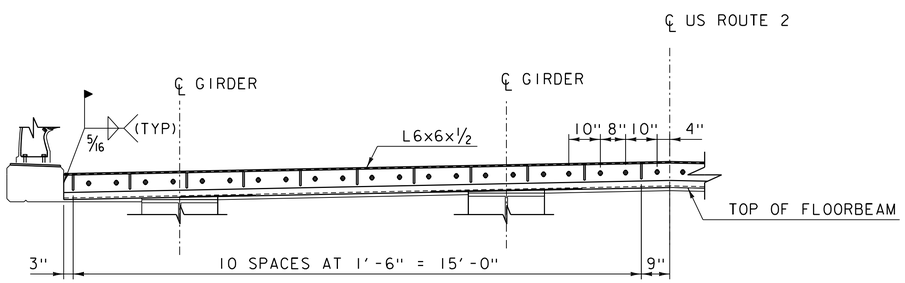

JOINT LOCATION ELEVATION VIEW
(SYMMETRICAL ABOUT ℄ BRIDGE)

SCALE 1/2" = 1'-0"
2' 0 2'

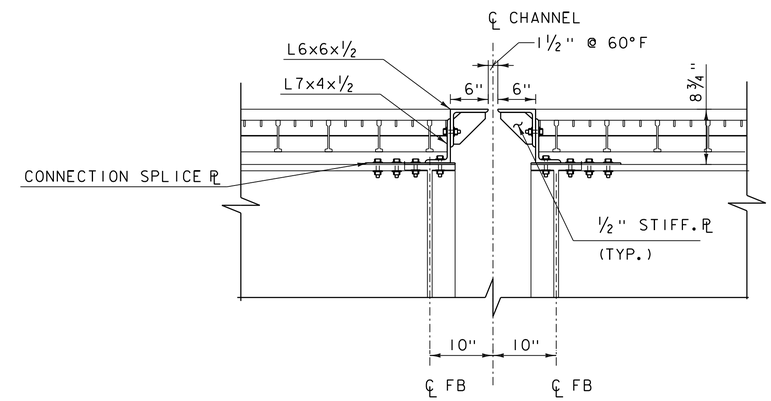

SECTION A-A

SCALE 1" = 1'-0"
4' 0 4'

PRELIMINARY PLANS

PROJECT NAME: NORTH HERO GRAND ISLE BRIDGE	
PROJECT NUMBER: BHF 028-1(26)	
FILE NAME: z12b142jointdt2.dgn	PLOT DATE: 10/7/2016
PROJECT LEADER: T. FRENCH	DRAWN BY: S. SANTRICH
DESIGNED BY: H. PROTIN	CHECKED BY: P. DAVIS
BASCULE JOINT DETAILS 2	SHEET 62 OF 172

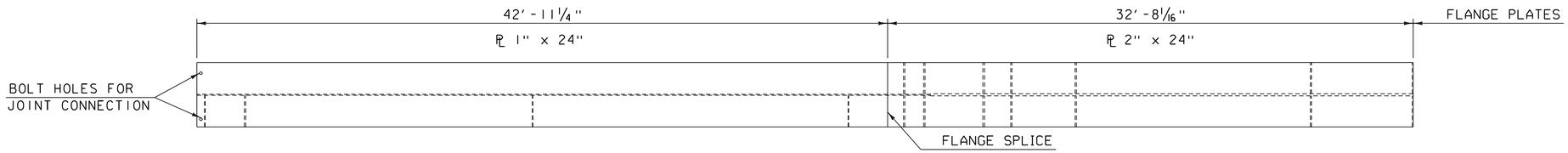

TOP FLANGE

HORIZONTAL SCALE 1/4" = 1'-0"

4' 0 4'

VERTICAL SCALE 1/2" = 1'-0"

2' 0 2'

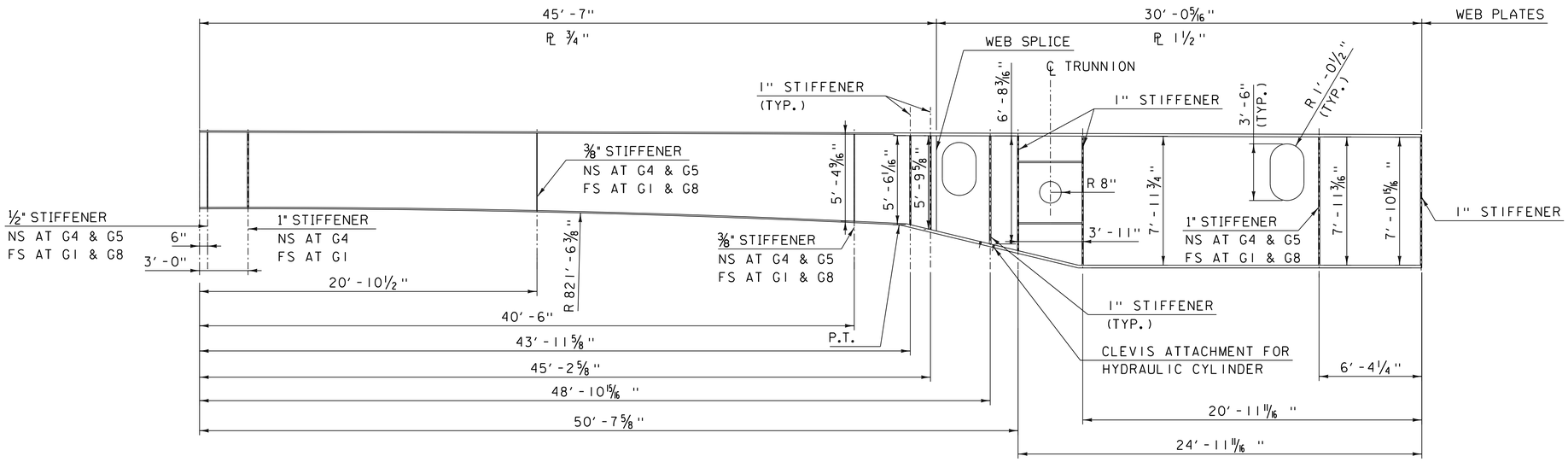

G5 & G8
G1 & G4 OPPOSITE HAND

SCALE 1/4" = 1'-0"

4' 0 4'

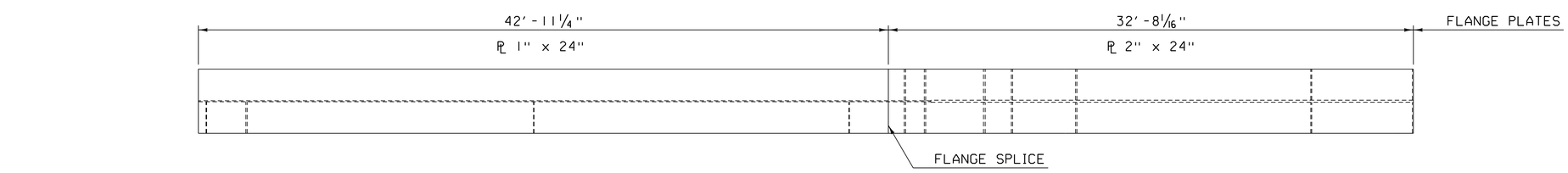

BOTTOM FLANGE

HORIZONTAL SCALE 1/4" = 1'-0"

4' 0 4'

VERTICAL SCALE 1/2" = 1'-0"

2' 0 2'

PRELIMINARY PLANS

PROJECT NAME:	NORTH HERO GRAND ISLE BRIDGE
PROJECT NUMBER:	BHF 028-1(26)

FILE NAME: z12b142girdmov1.dgn	PLOT DATE: 10/7/2016
PROJECT LEADER: T. FRENCH	DRAWN BY: K. PATEL
DESIGNED BY: H. PROTIN	CHECKED BY: P. DAVIS
BASCULE SPAN GIRDER DETAILS - 1 OF 3	SHEET 63 OF 172

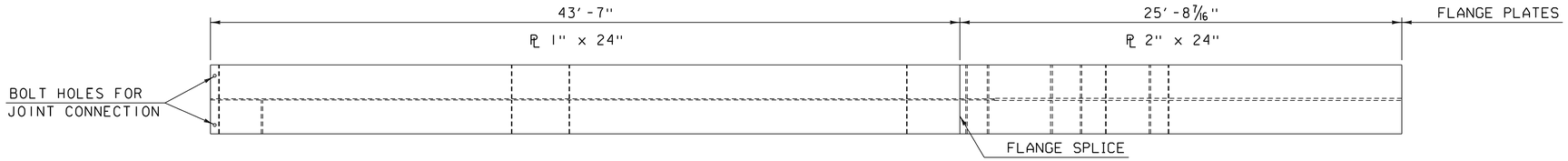

TOP FLANGE

HORIZONTAL SCALE 1/4" = 1'-0"

4' 0 4'

VERTICAL SCALE 1/2" = 1'-0"

2' 0 2'

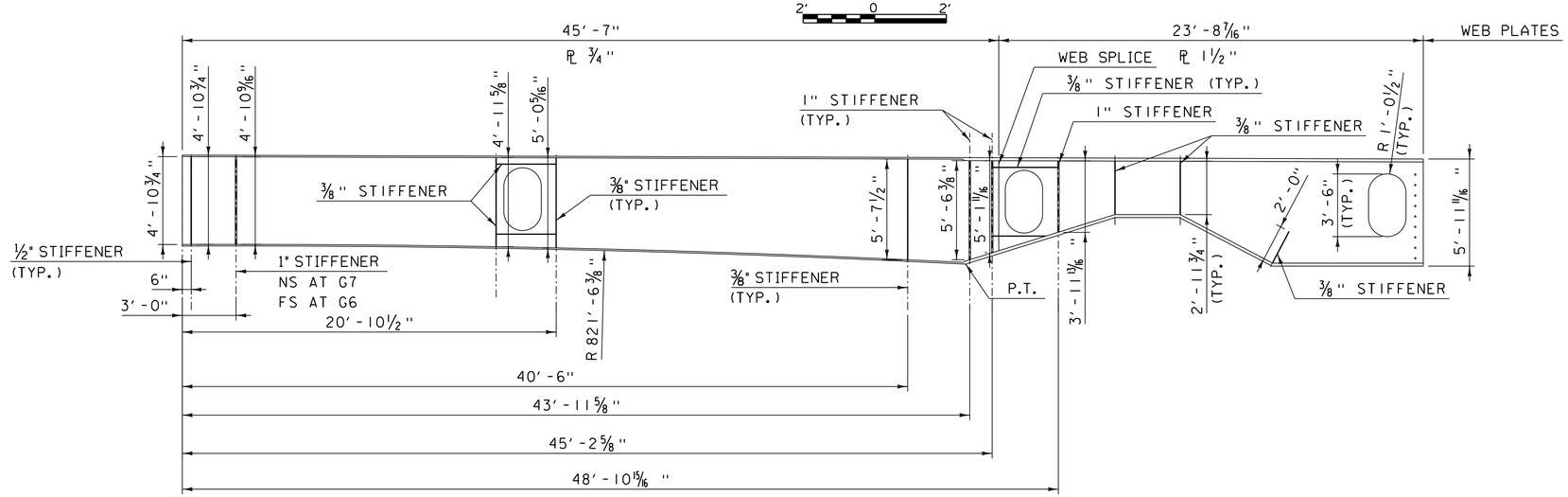

INTERIOR BASCULE GIRDER ELEVATION

SCALE 1/4" = 1'-0"

4' 0 4'

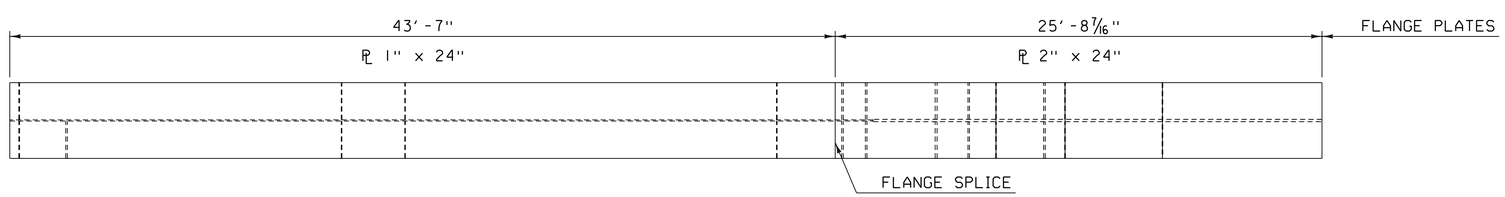

BOTTOM FLANGE

HORIZONTAL SCALE 1/4" = 1'-0"

4' 0 4'

VERTICAL SCALE 1/2" = 1'-0"

2' 0 2'

PRELIMINARY PLANS

PROJECT NAME: NORTH HERO GRAND ISLE BRIDGE	
PROJECT NUMBER: BHF 028-1(26)	
FILE NAME: z12b142girdmov2.dgn	PLOT DATE: 10/7/2016
PROJECT LEADER: T. FRENCH	DRAWN BY: K. PATEL
DESIGNED BY: H. PROTIN	CHECKED BY: P. DAVIS
BASCULE SPAN GIRDER DETAILS - 2 OF 3	SHEET 64 OF 172

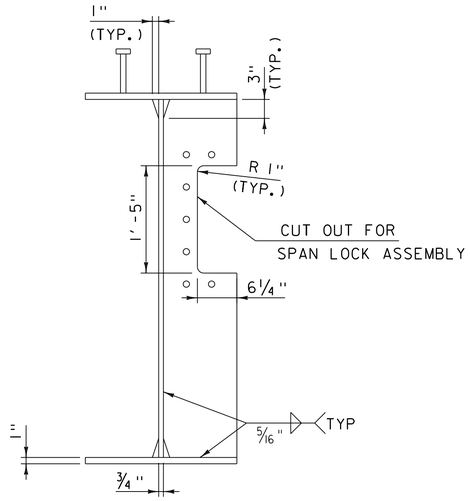

STIFFENER
AT FLOORBEAM AT TOE

SCALE 1" = 1'-0"
1' 0 1'

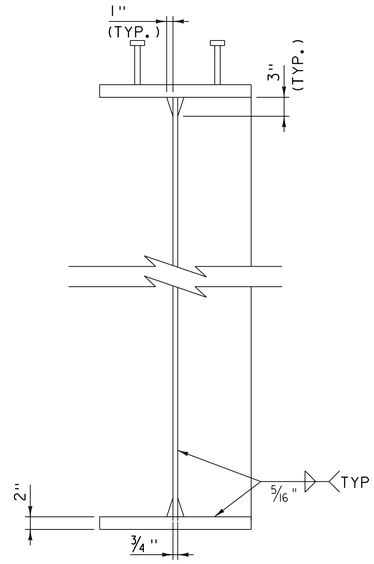

STIFFENER
AT DIAPHRAGM

SCALE 1" = 1'-0"
1' 0 1'

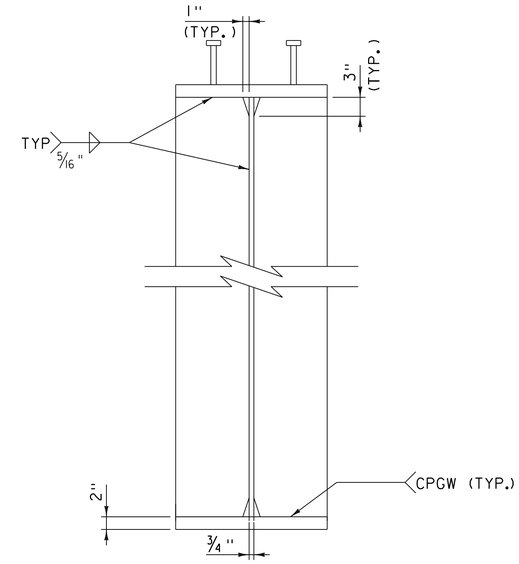

STIFFENER
AT LL LOAD SHOE

SCALE 1" = 1'-0"
1' 0 1'

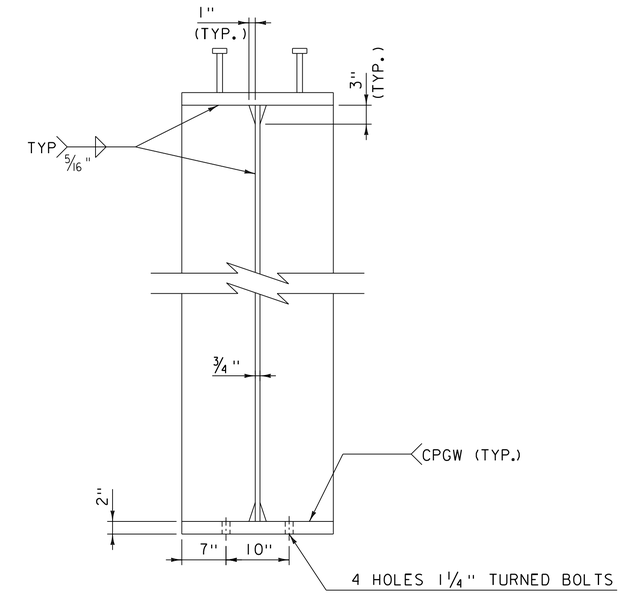

STIFFENER
AT CLEVIS ATTACHMENT

SCALE 1" = 1'-0"
1' 0 1'

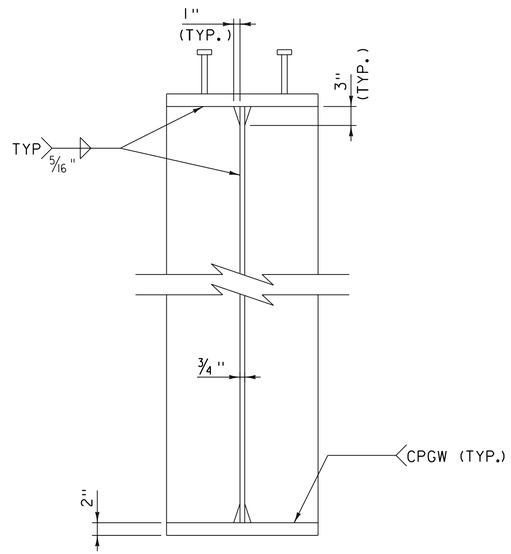

STIFFENER
AT TRUNNION

SCALE 1" = 1'-0"
1' 0 1'

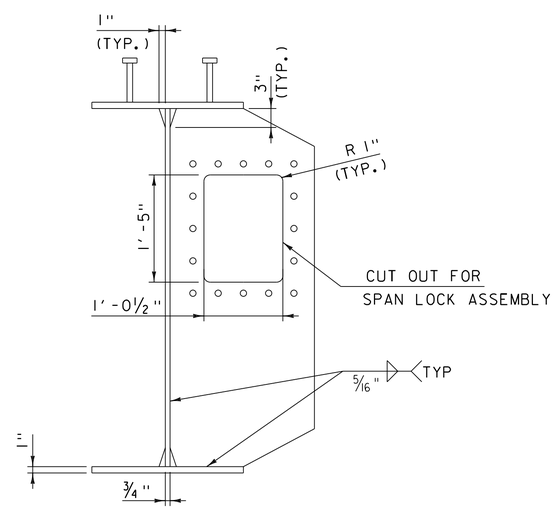

STIFFENER
AT SPAN LOCK REAR GUIDE

SCALE 1" = 1'-0"
1' 0 1'

NOTE:

1. REFER TO MECHANICAL DRAWINGS FOR OPERATING MACHINERY ASSEMBLY.

PRELIMINARY PLANS

PROJECT NAME: NORTH HERO GRAND ISLE BRIDGE	
PROJECT NUMBER: BHF 028-1(26)	
FILE NAME: z12bl42girdmov3.dgn	PLOT DATE: 10/7/2016
PROJECT LEADER: T. FRENCH	DRAWN BY: K. PATEL
DESIGNED BY: H. PROTIN	CHECKED BY: P. DAVIS
BASCULE SPAN GIRDER DETAILS - 3 OF 3	SHEET 65 OF 172

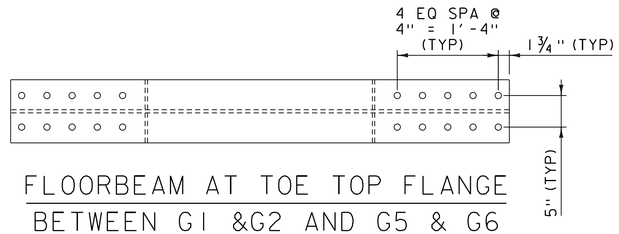

FLOOREAM AT TOE TOP FLANGE
BETWEEN G1 &G2 AND G5 & G6

SCALE 1" = 1'-0"
1' 0 1'

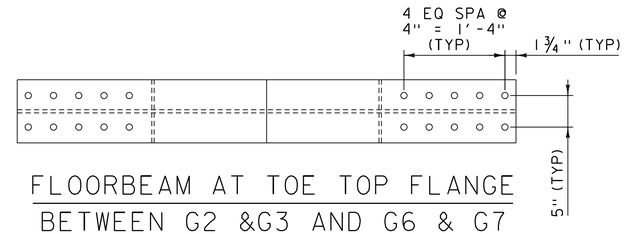

FLOOREAM AT TOE TOP FLANGE
BETWEEN G2 &G3 AND G6 & G7

SCALE 1" = 1'-0"
1' 0 1'

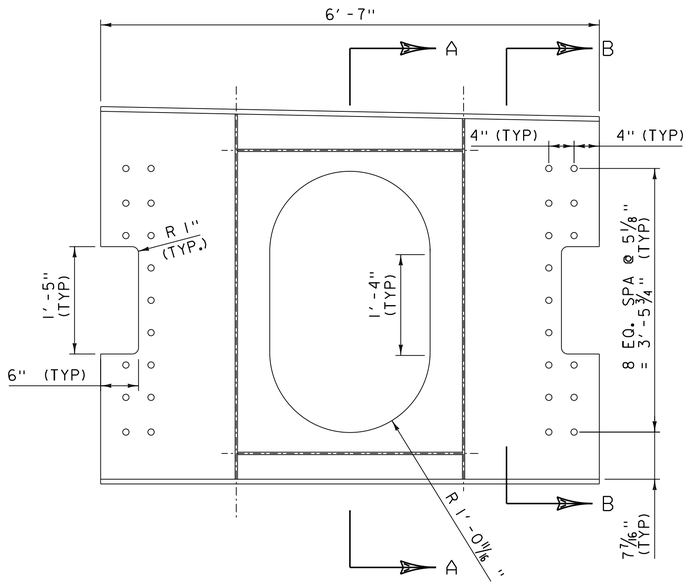

FLOOREAM AT TOE BETWEEN G1 & G2 AND G5 & G6
(BETWEEN G3 & G4 AND G7 & G8 OPPOSITE SIDE)

SCALE 1" = 1'-0"
1' 0 1'

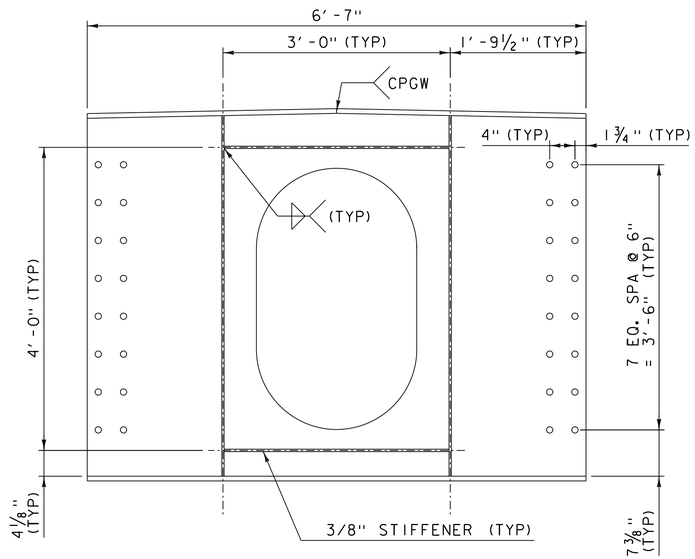

FLOOREAM AT TOE BETWEEN G2 & G3 AND G6 & G7

SCALE 1" = 1'-0"
1' 0 1'

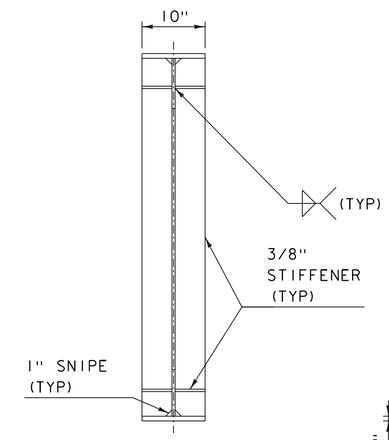

SECTION A-A

SCALE 1" = 1'-0"
1' 0 1'

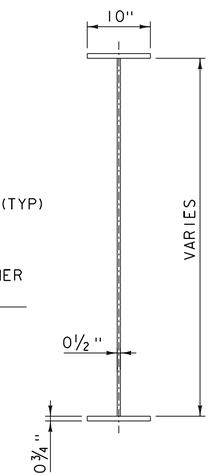

SECTION B-B

SCALE 1" = 1'-0"
1' 0 1'

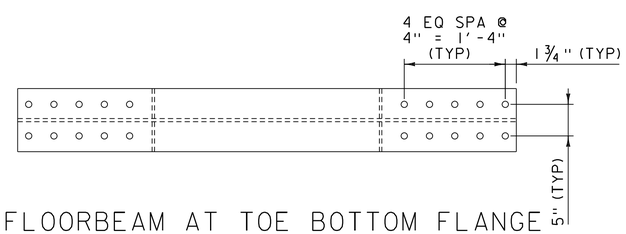

FLOOREAM AT TOE BOTTOM FLANGE
BETWEEN G1 &G2 AND G5 & G6

SCALE 1" = 1'-0"
1' 0 1'

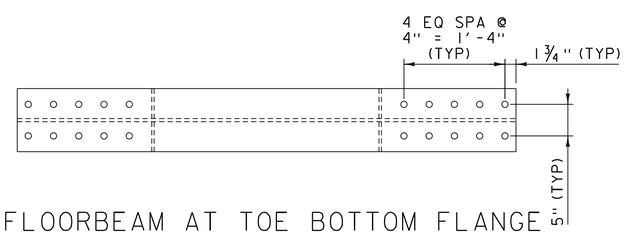

FLOOREAM AT TOE BOTTOM FLANGE
BETWEEN G2 &G3 AND G6 & G7

SCALE 1" = 1'-0"
1' 0 1'

PRELIMINARY PLANS

PROJECT NAME:	NORTH HERO GRAND ISLE BRIDGE
PROJECT NUMBER:	BHF 028-1(26)

FILE NAME: z12b142enddia.dgn	PLOT DATE: 10/7/2016
PROJECT LEADER: T. FRENCH	DRAWN BY: K. PATEL
DESIGNED BY: H. PROTIN	CHECKED BY: P. DAVIS
END DIAPHRAGM	SHEET 66 OF 172

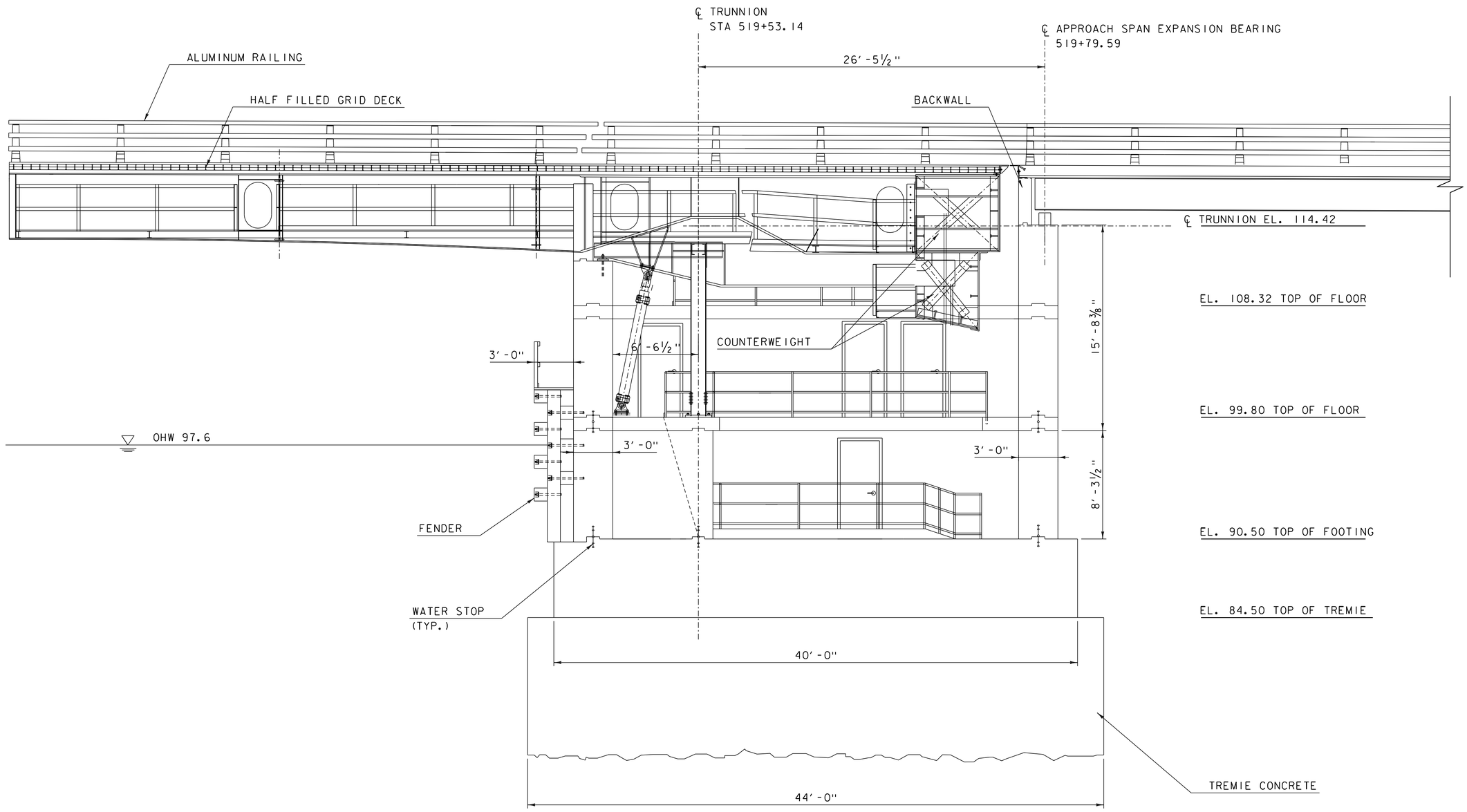

TYPICAL LONGITUDINAL SECTION
AT BASCULE PIER
(PIER 2 SHOWN, PIER 1 SIMILAR)

SCALE ¼″ = 1′-0″
4′ 0 4′

NOTE:

CONTROL HOUSE NOT SHOWN FOR CLARITY.

PRELIMINARY PLANS

PROJECT NAME: NORTH HERO GRAND ISLE BRIDGE	
PROJECT NUMBER: BHF 028-1(26)	
FILE NAME: zl2bl42pierxsl.dgn	PLOT DATE: 10/7/2016
PROJECT LEADER: T. FRENCH	DRAWN BY: S. SANTRICH
DESIGNED BY: H. PROTIN	CHECKED BY: P. DAVIS
BASCULE PIER LONGITUDINAL SECTION	SHEET 67 OF 172

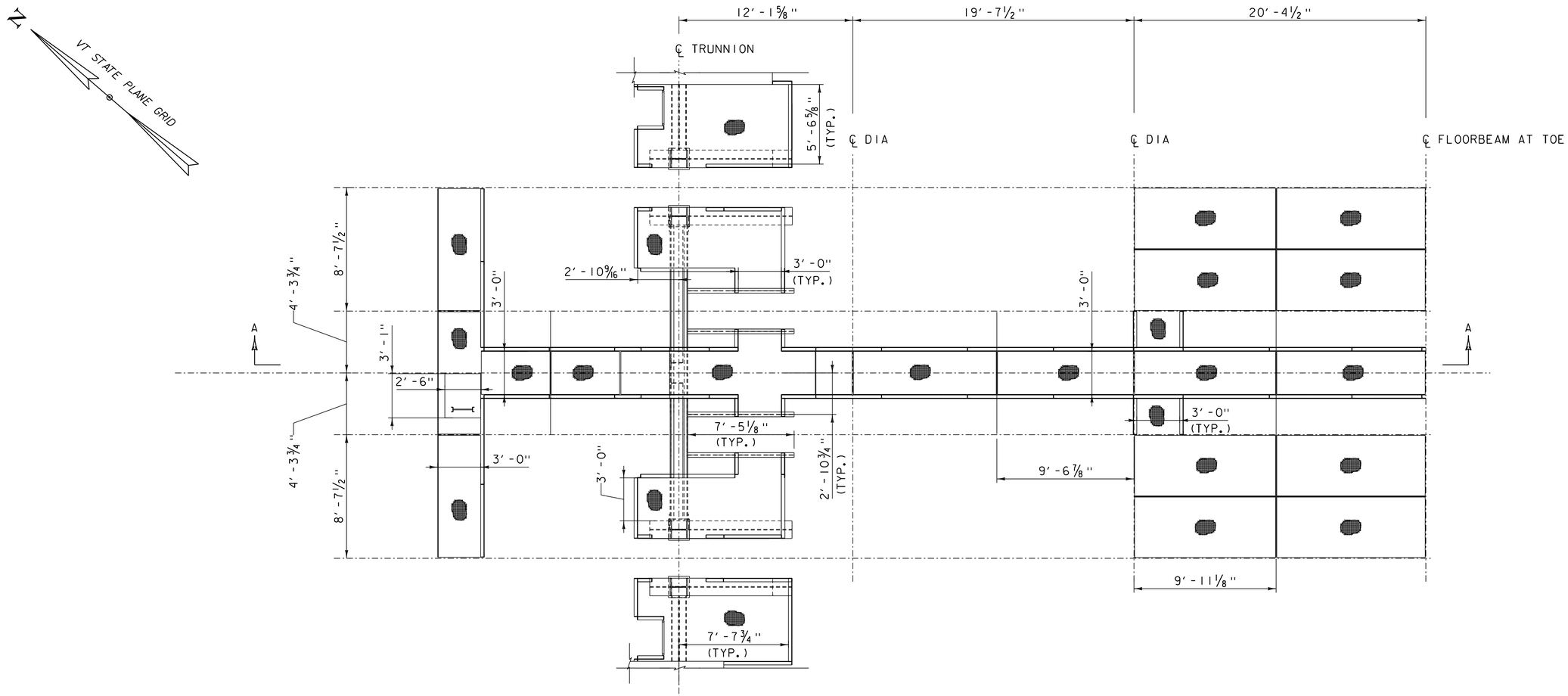

MAINTENANCE WALKWAY PLAN
(WEST SIDE SHOWN)

SCALE 1/4" = 1'-0"

4' 0 4'

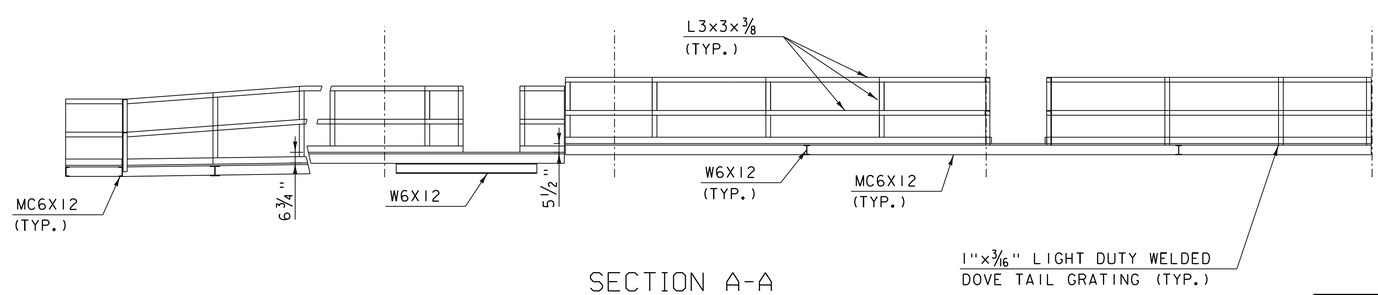

SECTION A-A

SCALE 1/4" = 1'-0"

4' 0 4'

NOTES

1. THE COST OF OPEN GRID DECK FOR WALKWAY AND PLATFORM SHALL BE INCLUDED IN PRICE BID FOR ITEM NO. 506.60 (STRUCTURAL STEEL)

PRELIMINARY PLANS

HDR

PROJECT NAME: NORTH HERO GRAND ISLE BRIDGE	
PROJECT NUMBER: BHF 028-1(26)	
FILE NAME: z12b142walkwayp.dgn	PLOT DATE: 10/7/2016
PROJECT LEADER: T. FRENCH	DRAWN BY: K. PATEL
DESIGNED BY: H. PROTIN	CHECKED BY: P. DAVIS
MAINTENENCE WALKWAY PLAN & ELEV	SHEET 68 OF 172

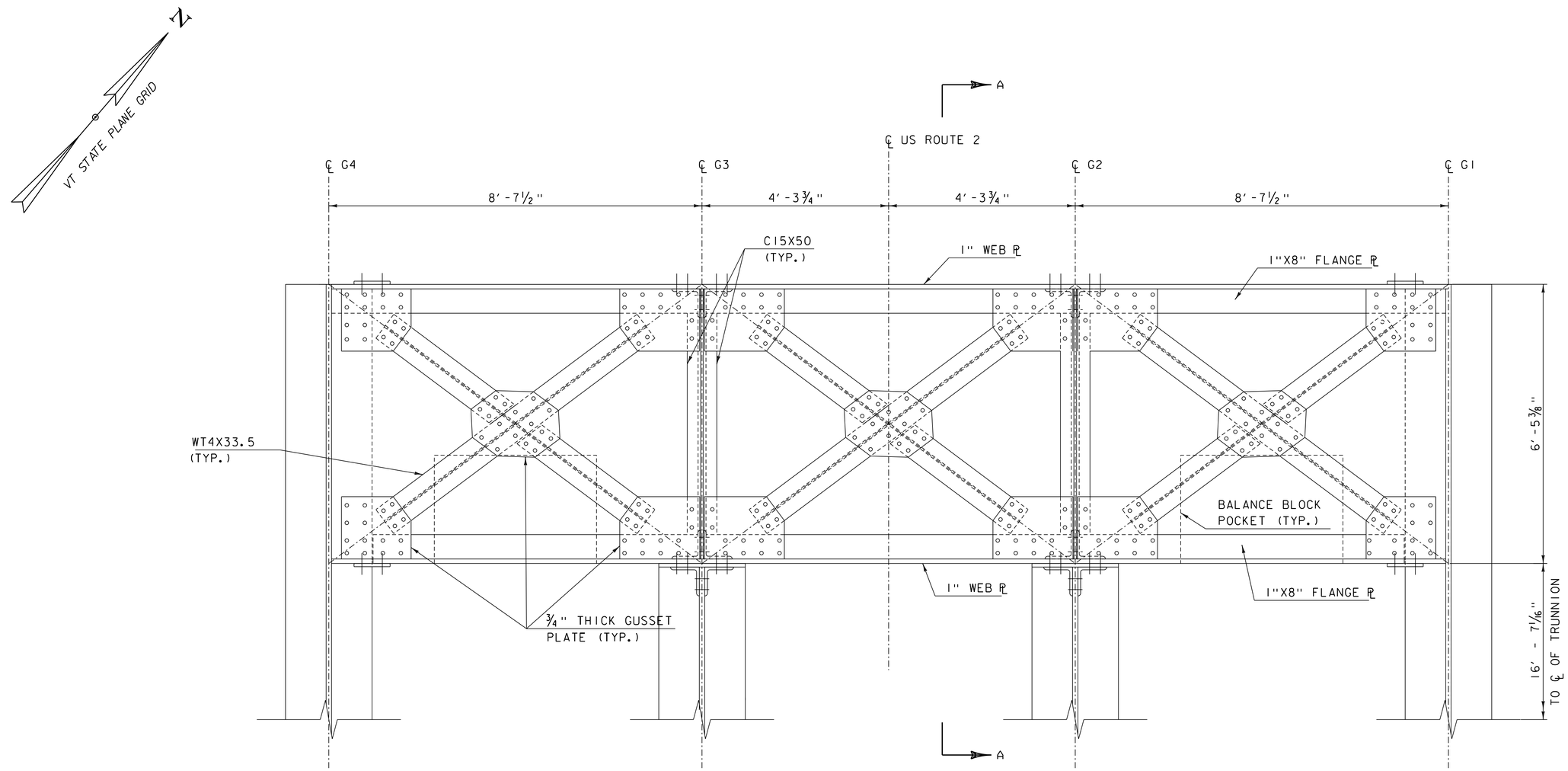

PLAN - UPPER COUNTERWEIGHT BRACING
(WEST COUNTERWEIGHT SHOWN, EAST COUNTERWEIGHT OPPOSITE HAND)

SCALE ¾" = 1'-0"
1.33' 0 1.33'

PRELIMINARY PLANS

NOTES

1. FOR SECTION A-A , SEE BASCULE SPAN COUNTERWEIGHT ELEVATION SHEET

HDR

PROJECT NAME: NORTH HERO GRAND ISLE BRIDGE	
PROJECT NUMBER: BHF 028-1(26)	
FILE NAME: z12b142ucwtplan.dgn	PLOT DATE: 10/7/2016
PROJECT LEADER: T. FRENCH	DRAWN BY: K. PATEL
DESIGNED BY: H. PROTIN	CHECKED BY: P. DAVIS
BASCULE SPAN UPPER COUNTERWEIGHT PLAN	SHEET 69 OF 172

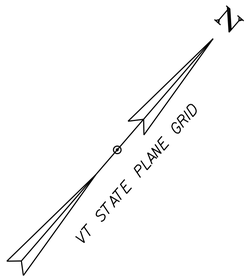

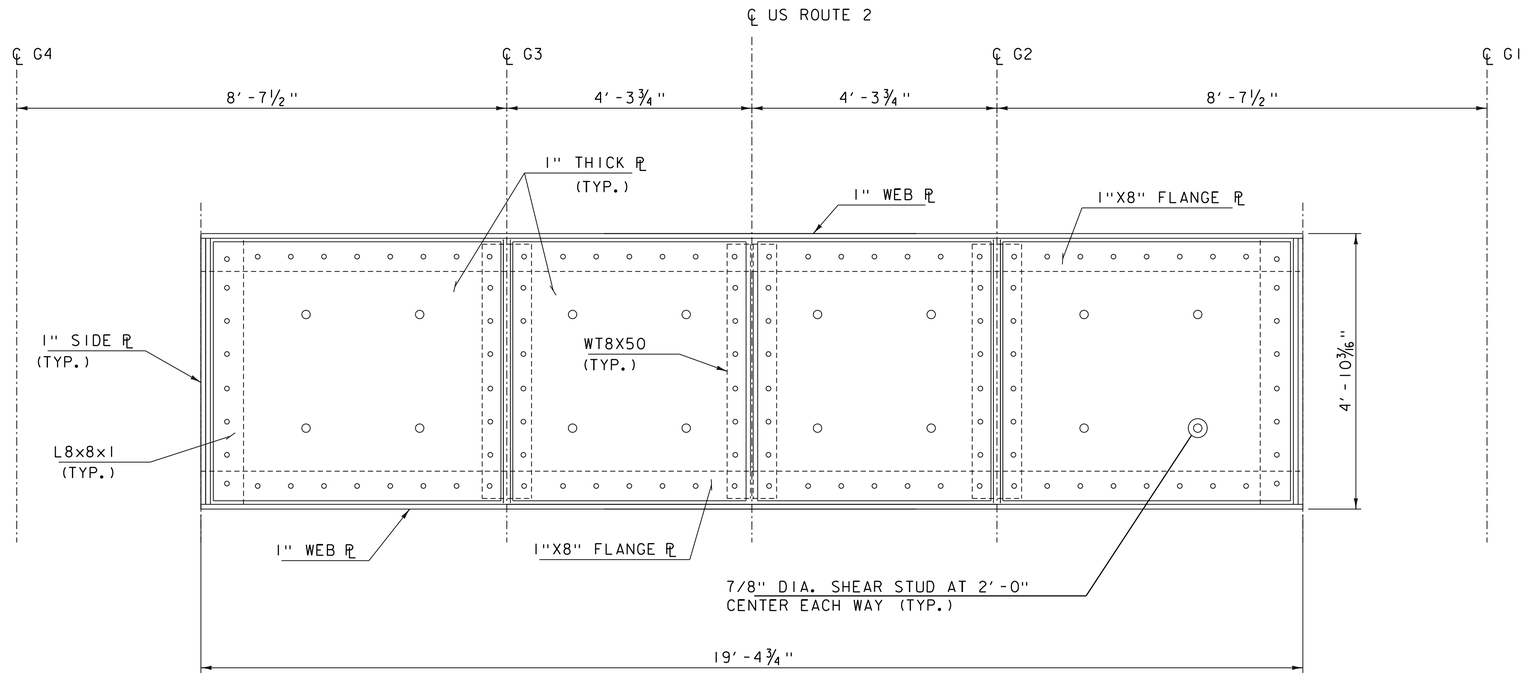

PLAN - LOWER COUNTERWEIGHT CELL
(WEST COUNTERWEIGHT SHOWN, EAST COUNTERWEIGHT OPPOSITE HAND)

SCALE ¾" = 1'-0"
1.33' 0 1.33'

PRELIMINARY PLANS

HDR

PROJECT NAME: NORTH HERO GRAND ISLE BRIDGE	
PROJECT NUMBER: BHF 028-1(26)	
FILE NAME: z12b142lcwtplan.dgn	PLOT DATE: 10/7/2016
PROJECT LEADER: T. FRENCH	DRAWN BY: K. PATEL
DESIGNED BY: H. PROTIN	CHECKED BY: P. DAVIS
BASCULE SPAN LOWER COUNTERWEIGHT PLAN	SHEET 70 OF 172

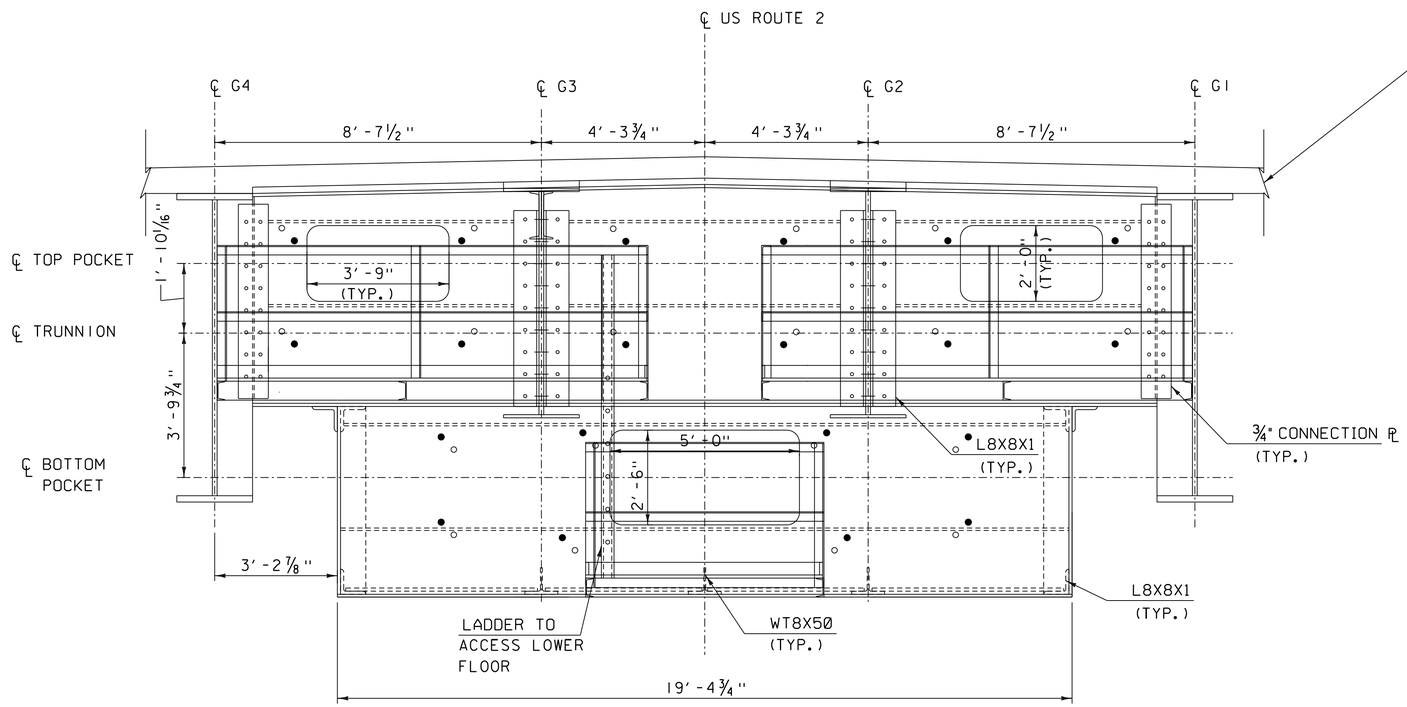

COUNTERWEIGHT ELEVATION
(WEST COUNTERWEIGHT SHOWN, EAST COUNTERWEIGHT OPPOSITE HAND)

SCALE ½″ = 1′-0″
2′ 0 2′

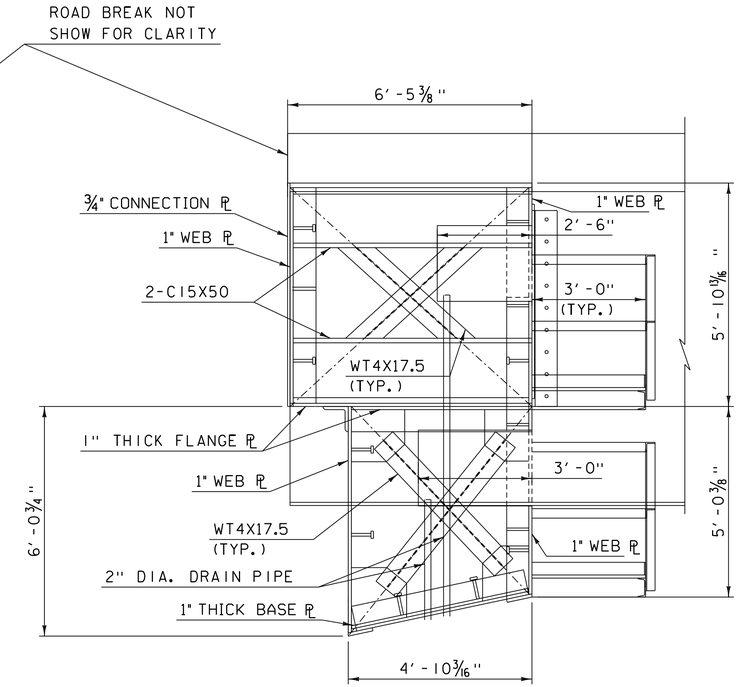

SECTION A-A

SCALE ½″ = 1′-0″
2′ 0 2′

NOTES

1. WEST COUNTERWEIGHT SHOWN, EAST COUNTERWEIGHT OPPOSITE HAND
2. FOR LOCATION OF SECTION A-A, SEE BASCULE SPAN - UPPER COUNTERWEIGHT PLAN SHEET

PRELIMINARY PLANS

PROJECT NAME: NORTH HERO GRAND ISLE BRIDGE	
PROJECT NUMBER: BHF 028-1(26)	
FILE NAME: z12b142cwtxs.dgn	PLOT DATE: 10/7/2016
PROJECT LEADER: T. FRENCH	DRAWN BY: K. PATEL
DESIGNED BY: H. PROTIN	CHECKED BY: P. DAVIS
BASCULE SPAN COUNTERWEIGHT ELEVATION	SHEET 71 OF 172

BALANCE TABLE					
FORWARD TO TRUNNION					
COMPONENTS	DEAD LOAD (KIP)	X-BAR (FT)	Y-BAR (FT)	Mx (KIP-FT)	My (KIP-FT)
GIRDERS	89.22	24.58	0.94	2192.84	83.66
DECK	148.31	23.34	4.16	3462.10	616.43
TRANSVERSE DECK JOINT	1.81	53.08	4.21	96.22	7.63
LONGITUDINAL DECK JOINT	1.57	5.09	4.10	8.00	6.44
HAUNCH	4.24	26.53	3.63	112.58	15.39
END FLOORBEAM	3.58	51.64	1.28	184.92	4.60
CONNECTION STIFFENERS (AT LL SHOE)	1.39	8.75	0.80	12.17	1.11
CONNECTION STIFFENERS (AT HEEL)	0.51	12.14	0.90	6.24	0.46
CONNECTION STIFFENERS (AT MIDDLE)	0.46	31.76	1.20	14.53	0.55
CONNECTION STIFFENERS (AT FB AT TOE)	0.60	51.64	1.26	30.74	0.75
MAINTENANCE WALKWAY (AT CENTER)	2.94	19.96	0.79	58.70	2.33
MAINTENACE WALKWAY FRAMING (AT CENTER)	1.69	19.96	1.21	33.71	2.04
MAINTENANCE WALKWAT (AT SHEAR LOCKS)	3.42	47.64	1.21	162.79	4.13
MAINTENACE WALKWAY FRAMING (AT SHEAR LOCKS)	0.82	47.64	1.21	39.22	0.99
ROADWAY RAILING	1.60	31.42	6.05	50.39	9.70
SPAN LOCK MACHINERY	3.13	45.60	1.35	142.83	4.22
DIAPHRAGM (AT HEEL)	2.20	12.14	2.96	26.69	6.51
DIAPHRAGM (AT MIDDLE)	2.20	31.76	2.96	69.85	6.51
INTERIOR BRACING (AT HEEL)	0.82	12.14	0.98	9.89	0.80
INTERIOR BRACING (AT MIDDLE)	0.72	31.76	1.28	22.90	0.93
EXTERIOR BRACING (AT HEEL)	0.50	12.14	1.03	6.05	0.51
EXTERIOR BRACING (AT MIDDLE)	0.49	31.76	1.00	15.62	0.49
∑	272.23	632.43	44.50	6759.01	776.18
REAR TO TRUNNION					
COMPONENTS	DEAD LOAD (KIP)	X-BAR (FT)	Y-BAR (FT)	Mx (KIP-FT)	My (KIP-FT)
GIRDERS	56.28	-10.55	-0.20	-593.53	-11.37
DECK	44.72	-11.67	-4.16	-521.84	-185.87
HAUNCH	0.93	-11.67	-3.63	-10.89	-3.38
TRANSVERSE DECK JOINT	2.21	-24.56	-4.10	-54.30	-9.07
LONGITUDINAL DECK JOINT	3.68	-11.95	-4.10	-44.00	-15.12
MAINTENANCE WALKWAY (AT CENTER)	0.93	-6.87	-0.79	-6.41	-0.74
MAINTENANCE WALKWAY FRAMING (AT CENTER)	0.76	-6.87	-1.21	-5.24	-0.92
MAINTENANCE WALKWAY (AT CWT)	2.31	-14.00	-3.71	-32.34	-8.57
MAINTENANCE WALKWAY FRAMING (AT CWT)	1.76	-14.00	-1.63	-24.59	-2.85
COUNTER WEIGHT	262.63	-20.11	-1.09	-5280.29	-285.37
∑	376.22	-132.24	-24.61	-6573.44	-523.27

PRELIMINARY PLANS

HDR

PROJECT NAME: NORTH HERO GRAND ISLE BRIDGE
PROJECT NUMBER: BHF 028-1(26)

FILE NAME: z12b142balance.dgn
PROJECT LEADER: T. FRENCH
DESIGNED BY: H. PROTIN
BRIDGE BALANCE TABLE

PLOT DATE: 10/7/2016
DRAWN BY: K. PATEL
CHECKED BY: P. DAVIS
SHEET 72 OF 172

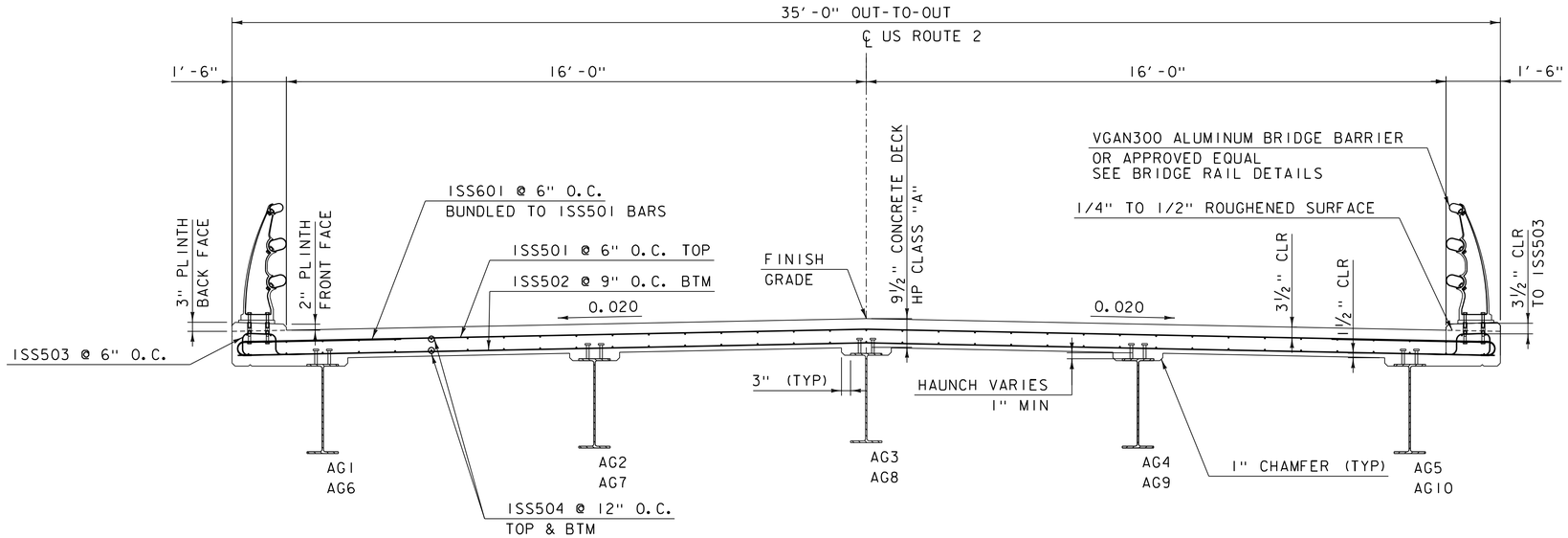

APPROACH SPAN DECK TYPICAL

SCALE ½" = 1'-0"

2' 0 2'

NOTE: UTILITIES NOT SHOWN FOR CLARITY.

PRELIMINARY PLANS

PROJECT NAME: NORTH HERO GRAND ISLE BRIDGE	
PROJECT NUMBER: BHF 028-1(26)	
FILE NAME: z12b142apdckdet.dgn	PLOT DATE: 10/7/2016
PROJECT LEADER: T. FRENCH	DRAWN BY: P. LEFEBVRE
DESIGNED BY: P. LEFEBVRE	CHECKED BY: M. MOZER
APPROACH SPAN DECK TYPICAL	SHEET 73 OF 172

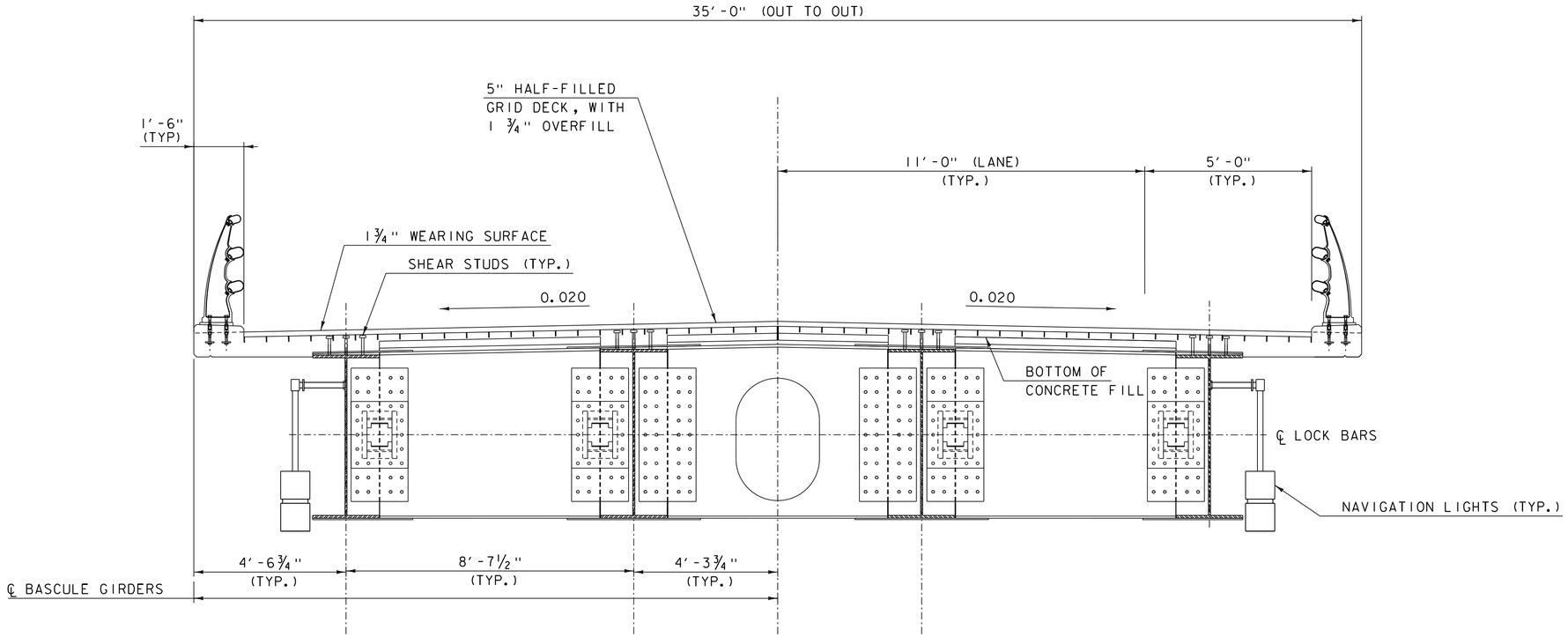

SECTION AT BASCULE SPAN

SCALE 1/2" = 1'-0"

2' 0 2'

PRELIMINARY PLANS

PROJECT NAME:	NORTH HERO GRAND ISLE BRIDGE
PROJECT NUMBER:	BHF 028-1(26)

FILE NAME: z12b142bascsec.dgn	PLOT DATE: 10/7/2016
PROJECT LEADER: T. FRENCH	DRAWN BY: S. SANTRICH
DESIGNED BY: H. PROTIN	CHECKED BY: P. DAVIS
BASCULE SPAN DECK DETAILS	SHEET 74 OF 172

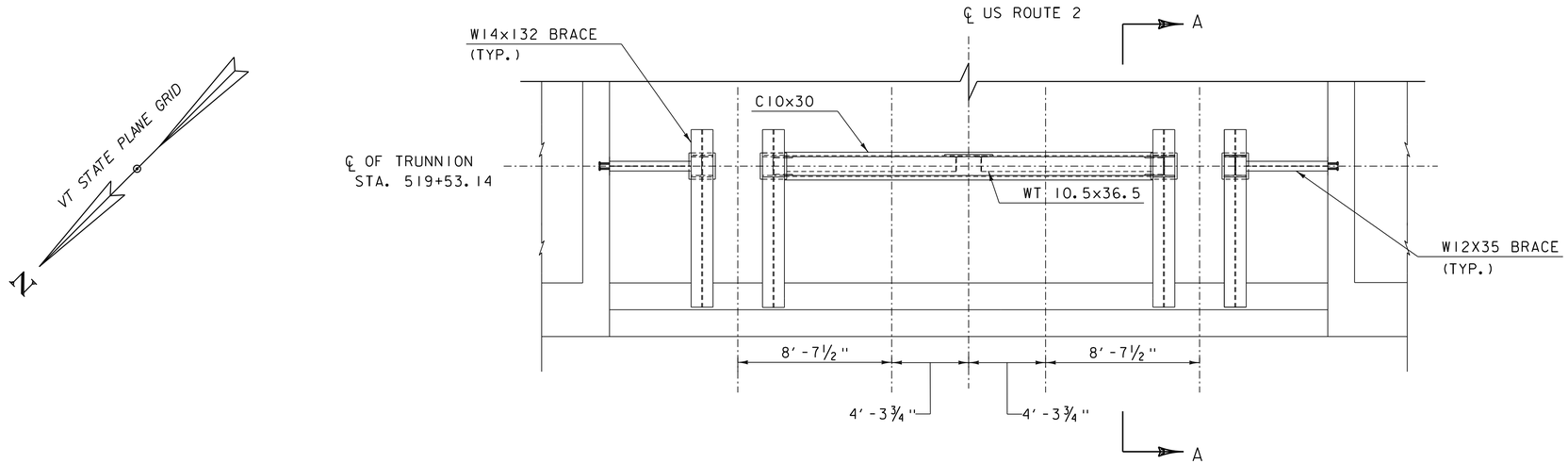

PIER 2 - TRUNNION SUPPORT PLAN

(PIER 1 SIMILAR)

SCALE ¼" = 1'-0"

4' 0 4'

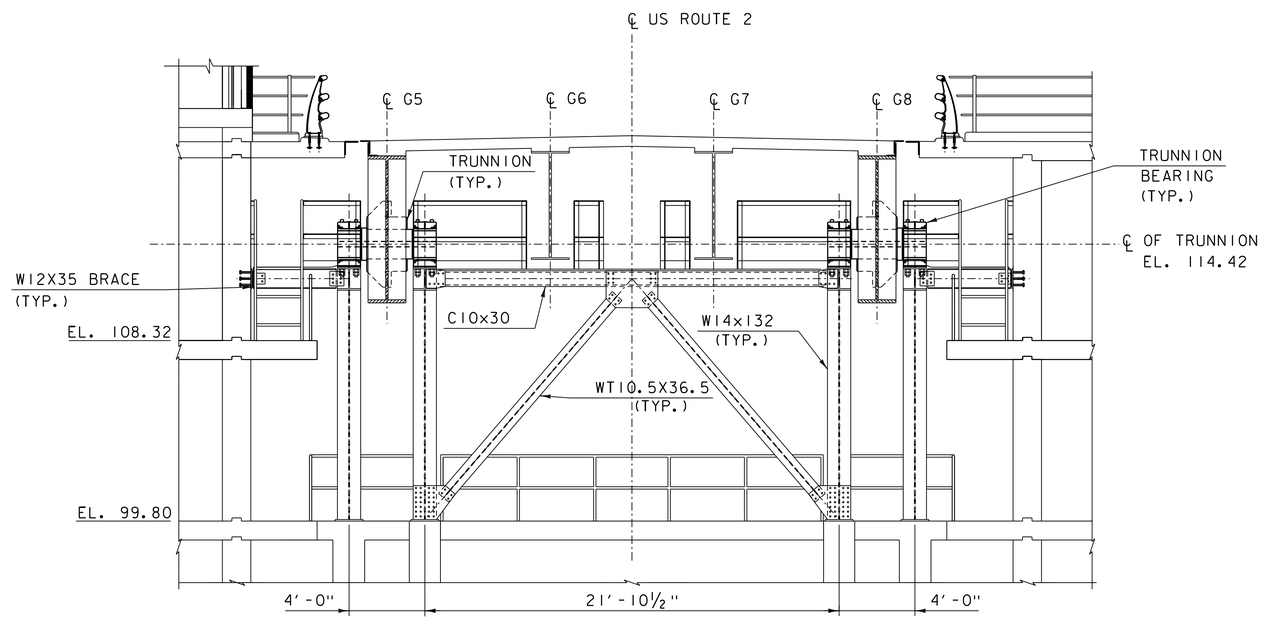

PIER 2 - TRUNNION SUPPORT ELEVATION DETAILS

(PIER 1 SIMILAR)

SCALE ¼" = 1'-0"

4' 0 4'

NOTE

1. SEE TRUNNION SUPPORT DETAILS 2 FOR SECTION A-A

PRELIMINARY PLANS

PROJECT NAME: NORTH HERO GRAND ISLE BRIDGE	
PROJECT NUMBER: BHF 028-1(26)	
FILE NAME: z12b142tdetail1.dgn	PLOT DATE: 10/7/2016
PROJECT LEADER: T. FRENCH	DRAWN BY: K. PATEL
DESIGNED BY: H. PROTIN	CHECKED BY: P. DAVIS
TRUNNION SUPPORT DETAILS 1	SHEET 75 OF 172

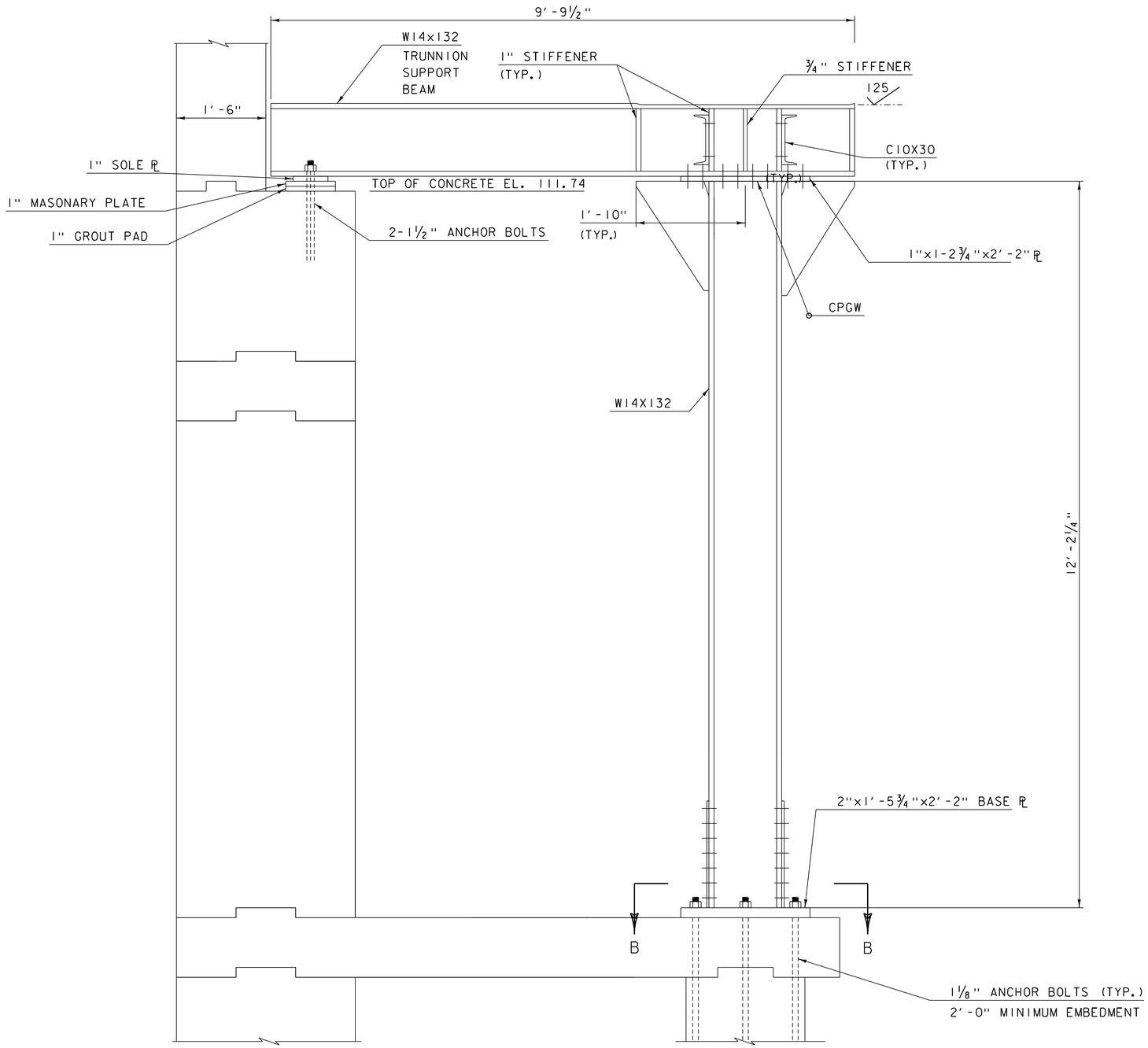

SECTION A-A

SCALE 1" = 1'-0"

1' 0 1'

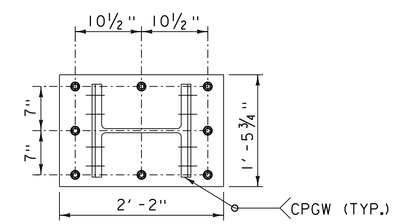

SECTION B-B

SCALE 1" = 1'-0"

1' 0 1'

NOTE

1. FOR LOCATION OF SECTION A-A, SEE TRUNNION SUPPORT DETAILS 1

PRELIMINARY PLANS

PROJECT NAME: NORTH HERO GRAND ISLE BRIDGE	
PROJECT NUMBER: BHF 028-1(26)	
FILE NAME: zl2bl42tdetail2.dgn	PLOT DATE: 10/7/2016
PROJECT LEADER: T. FRENCH	DRAWN BY: K. PATEL
DESIGNED BY: H. PROTIN	CHECKED BY: P. DAVIS
TRUNNION SUPPORT DETAILS 2	SHEET 76 OF 172

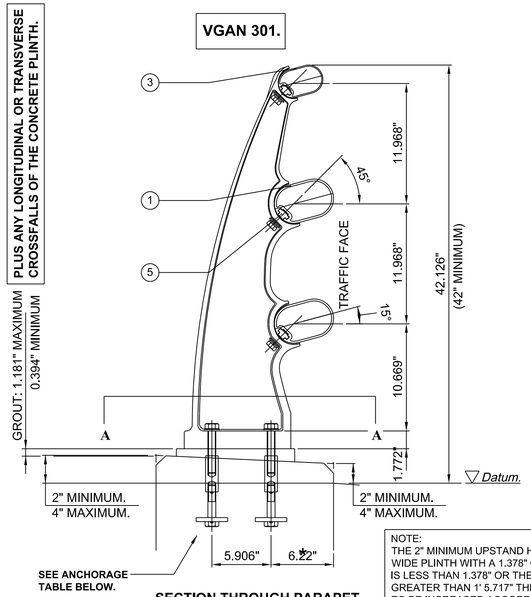

SECTION THROUGH PARAPET.

NOTE:
THE 2" MINIMUM UPSTAND HEIGHT IS BASED ON A 1' 5.717" WIDE PLINTH WITH A 1.378" CROSSFALL. IF THE CROSSFALL IS LESS THAN 1.378" OR THE WIDTH OF THE PLINTH IS GREATER THAN 1' 5.717" THE MINIMUM UPSTAND HEIGHT IS TO BE INCREASED ACCORDINGLY TO ACHIEVE A MINIMUM OVERALL HEIGHT OF 3' 6". THE 2" MAXIMUM UPSTAND HEIGHT IS CONSTANT IN ALL SITUATIONS.

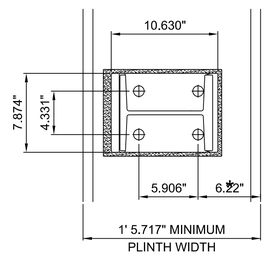

SECTION A-A.

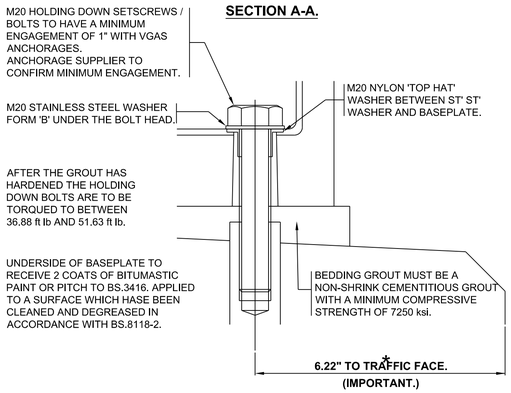

ENLARGED VIEW ON HOLDING DOWN BOLT.

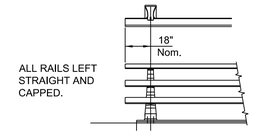

END DETAILS

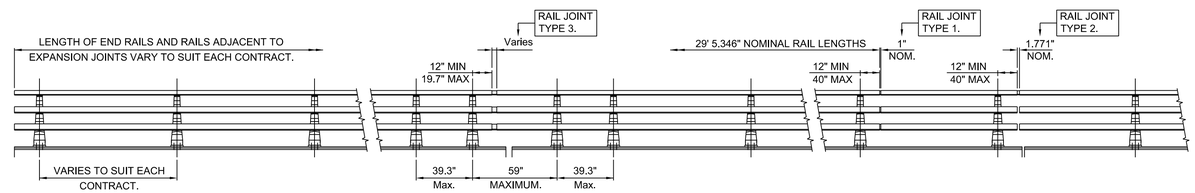

TYPICAL JOINT LOCATIONS.

VGAN 300 SERIES PARAPET IS A **MODULAR SYSTEM** BASED ON **9' 10.11" POST CENTRES**. REDUCTION IN POST CENTRES DOWN TO 7' 3.4" CENTRES CAN OCCUR ADJACENT TO NO-TENSION RAIL JOINTS TYPE 3 AND END OF PARAPET RUN. CLOSER POST CENTRES MAY BE USED FOR SINGLE BAYS WHERE THIS CANNOT BE AVOIDED AT MOVEMENT JOINTS AND END OF PARAPET RUNS.

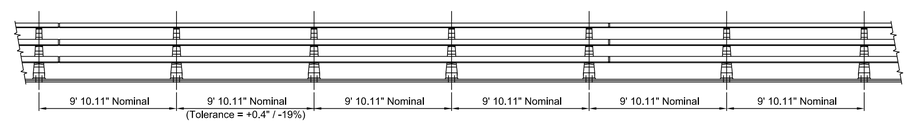

VGAN 301 PARAPET.

GENERAL NOTES.

1/. ALL ALUMINIUM WELDING, IF APPLICABLE, TO BE IN ACCORDANCE WITH BS.EN.1011-4.

2/. WELDERS AND WELDING PROCEDURES ARE IN ACCORDANCE WITH BS.EN.287-2 AND BS.EN.288-4 RESPECTIVELY.

3/. MAIN RAILS CAN BE RADIUSED TO SUIT ON SITE DOWN TO MINIMUM RADII OF 495'. TIGHTER RADII CAN BE SUPPLIED PREFORMED BY SPECIAL ARRANGEMENT.

4/. DIMENSIONS RELATIVE TO HEIGHT DATUM ASSUME THERE IS NO LONGITUDINAL FALL ON THE PLINTH. ADDITIONAL TOLERANCES TO TAKE ACCOUNT OF THESE FALLS ARE PERMISSIBLE.

5/. FABRICATION TO BE IN ACCORDANCE WITH BS.8118-2.

6/. AN EASILY LEGIBLE IDENTIFICATION PLATE SHALL BE APPLIED AND LOCATED NEAR TO THE TOP OF THE FIRST POST AT EACH APPROACH END IN AN EASILY VISIBLE POSITION.

7/. BRIDGE RAIL TO MEET NCHRP 350 TEST DESIGNATION TL 4.

SECTION SCHEDULE

1	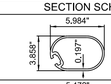	MAIN RAIL SECTION 110931
2	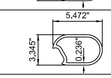	RAIL JOINT SECTION 110932
3	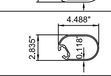	PEDESTRIAN RAIL SECTION 110934
4	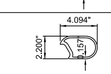	PEDESTRAIN RAIL JOINT SECTION 110935
5	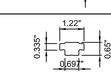	RAIL CONNECTION NUT SECTION 110933
SCALE	P.G.H.	

PRELIMINARY PLANS

PROJECT NAME:	NORTH HERO GRAND ISLE BRIDGE
PROJECT NUMBER:	BHF 028-1(26)

FILE NAME: z12b142brrail.dgn	PLOT DATE: 10/7/2016
PROJECT LEADER: T. FRENCH	DRAWN BY: P. LEFEBVRE
DESIGNED BY:	CHECKED BY: M. MOZER
BRIDGE RAIL DETAILS 1	SHEET 77 OF 172

NOTE:
THE TOP OF THE ANCHORAGE SOCKETS ARE TO BE SET LEVEL WITH THE HIGH POINT OF THE CONCRETE UPSTAND.
TOLERANCE: +0mm / -5mm.

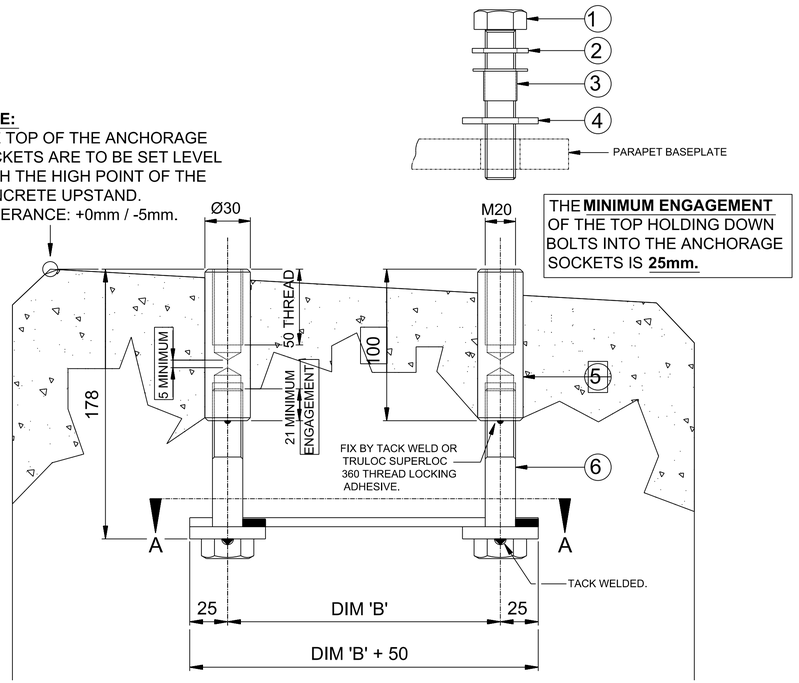

SIDE ELEVATION.

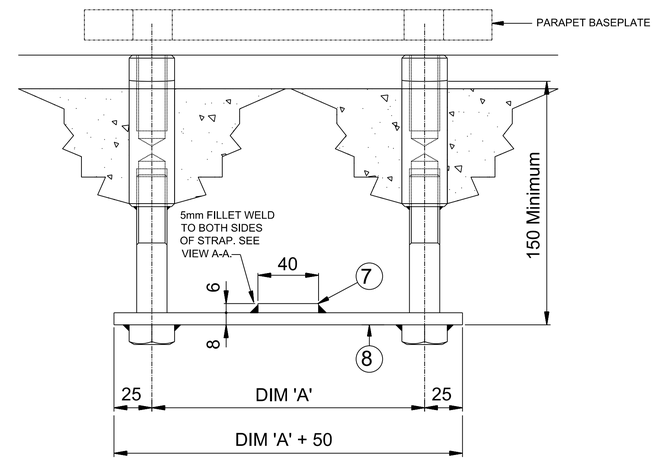

FRONT ELEVATION.

TRAFFIC FLOW

Item No.	Description.
1.	Parapet Holding Down Fixing: M20 x Suitable length Hexagonal Head Setscrew.
2.	M20 Flat Washer Form 'A'.
3.	M20 Nylon Top Hat Washer.
4.	M20 x 23 i/d x 50 o/d x 4mm Galvanised Washer. (For use with Steel Parapets only.)
5.	Anchorage Coupler.
6.	M20x100 Hexagonal Head Bolt.
7.	40x6 Anchorage Base connecting strap.
8.	50x8 Anchorage Base straps.
9.	Plywood Template.

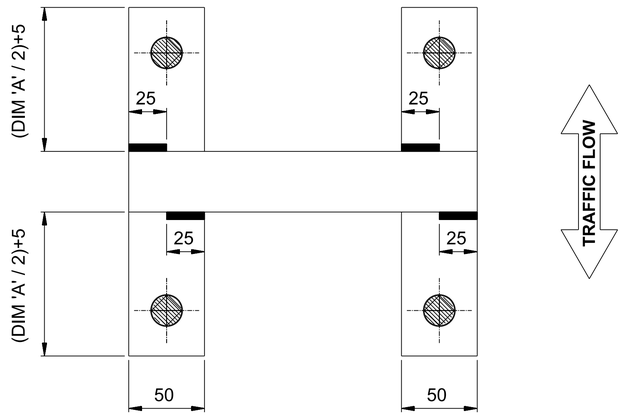

SECTION A-A.

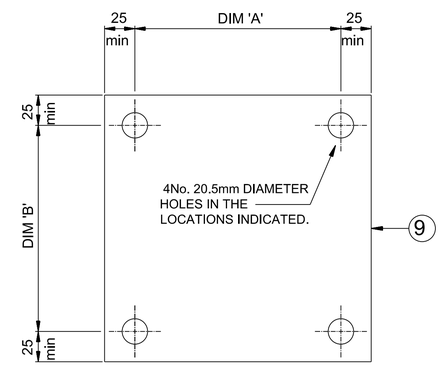

PLYWOOD TEMPLATE.

ALL DIMENSIONS IN MM.

MM	IN
20	0.79
25	0.98
30	1.18
50	1.96
60	2.36
100	3.94

INSTALLATION PROCEDURE

1. THE ANCHOR EMBEDMENT DEPTH IN THE CONCRETE MUST NOT BE LESS THAN 150MM.
2. IF THE PARAPET CROSSFALL AND/OR LONGFALL EXCEEDS A TOTAL OF 20MM BETWEEN SOCKET CENTRES, THE ANCHORAGE MUST BE SET TO ENSURE THAT THE STAINLESS STEEL SOCKET HAS A MINIMUM EMBEDMENT OF 80MM.
3. ANCHORAGES ARE SUPPLIED WITH A PLYWOOD TEMPLATE AND CARBON STEEL BOLTS FOR FIXING TO FORMWORK. THE PLYWOOD IS TO BE NAILED TO THE SHUTTERING BEFORE POURING. IF IT IS NECESSARY TO REMOVE THE PLYWOOD, THIS SHOULD NOT BE DONE UNTIL AFTER THE CONCRETE IS SET SUFFICIENTLY TO PREVENT ANY DISTURBANCE OF THE ANCHORAGE.
4. THE CARBON STEEL BOLTS MUST BE REPLACED IN THE SOCKETS, TO ENSURE THE SOCKET THREADS ARE KEPT CLEAN.
5. APPLY HIGH CREEP RESISTANT GREASE TO SOCKET THREADS AFTER CLEANING BUT PRIOR TO INSERTING THE STAINLESS STEEL HOLDING DOWN BOLT. (ROCOL J166 OR SIMILAR).
6. FOR PARAPET ERECTION SEQUENCE REFER TO PRODUCT SPECIFICATION MANUALS.
7. THE LENGTH OF TOP BOLT TO BE DETERMINED BY THE PARAPET INSTALLER, TO SUIT SITE CONDITIONS, TO ENSURE A MINIMUM THREAD ENGAGEMENT OF 25MM. (0.98IN).
8. FOR ALUMINUM PARAPETS THE NYLON TOP HAT WASHERS ARE TO BE PLACED BETWEEN THE STAINLESS STEEL WASHER AND THE ALUMINUM BASEPLATE.
9. FOR STEEL PARAPETS THE NYLON WASHERS ARE TO BE PLACED BETWEEN THE UNDERSIDE OF THE BOLT HEAD AND THE GALVANIZED STEEL WASHER.

PRELIMINARY PLANS

PROJECT NAME: NORTH HERO GRAND ISLE BRIDGE
PROJECT NUMBER: BHF 028-1(26)

FILE NAME: z12b142brrail2.dgn
PROJECT LEADER: T. FRENCH
DESIGNED BY:
BRIDGE RAIL DETAILS 2

PLOT DATE: 10/7/2016
DRAWN BY: P. LEFEBVRE
CHECKED BY: M. MOZER
SHEET 78 OF 172

MECHANICAL GENERAL NOTES

1. DETAILS OF MACHINERY SHALL CONFORM TO THE LATEST AASHTO STANDARD SPECIFICATIONS FOR MOVABLE HIGHWAY BRIDGES UNLESS OTHERWISE SHOWN ON THE PLANS OR PROVIDED FOR IN THE SPECIFICATIONS.

2. THIS PROJECT IS SUBJECT TO ALL PROVISIONS OF THE "BUY AMERICA" REQUIREMENTS FOR STEEL. SUPPLIERS OF MACHINERY COMPONENTS SHALL FULLY COMPLY WITH THESE REQUIREMENTS (23 USC 313 AND 23 CFR 635.410)

3. ALL DIMENSIONS FOR MACHINE FINISHED SURFACES SHALL BE HELD TO .010" AFTER MACHINING EXCEPT AS OTHERWISE REQUIRED BY THE DRAWINGS OR SPECIFICATIONS. ALL KEYS ARE TO CONFORM TO ANSI B17.1 UNLESS OTHERWISE NOTED. STEEL IS ASTM A709 GR36, UNLESS OTHERWISE NOTED. THE CONTRACTOR HAS THE OPTION OF SUBSTITUTING ASTM A709 GR50 AT NO ADDITIONAL COST.

4. PROVIDE ASTM A449 H.S. BOLTS AS REQUIRED TO CONNECT MACHINERY TO STRUCTURAL STEEL. ALL ASTM A449 BOLTS CONNECTING MACHINERY TO STRUCTURAL STEEL SHALL HAVE CLEARANCE OF NOT MORE THAN 0.010" BETWEEN THE BODY OF THE BOLT AND THE HOLE. ALL H.S. FASTENERS SHALL HAVE A HARDENED PLAIN WASHER UNDER THE HEAD AND NUT. ALL BOLT HOLES IN CASTINGS SHALL BE SPOTFACED. NEW H.S. BOLTS THAT HAVE BEEN TORQUED SHALL NOT BE REUSED.

5. PROVIDE STAINLESS STEEL SHIMS FOR LEVELING AND ALIGNING ALL MACHINERY COMPONENTS. SHIM PACKS SHALL BE 1/2". NOMINAL THICKNESS UNLESS OTHERWISE SPECIFIED WITH ADJUSTMENTS FOR 1/64" VARIATIONS. ALL SHIMS TO BE FULL FOOTPRINT OF MACHINERY COMPONENT AND MADE FROM STAINLESS STEEL. U-SHAPED OR SLOTTED SHIMS ARE NOT ACCEPTABLE. STEPPED SHIMS ARE NOT ACCEPTABLE.

6. MACHINERY DIMENSIONS SHOWN ON DRAWINGS ARE DIMENSIONS AFTER MACHINING.

   UNLESS OTHERWISE NOTED, FITS AND FINISHES FOR MACHINERY SHALL BE AS FOLLOWS:

SURFACE	FIT ENGLISH	FINISH MICRO INCH
MACHINERY BASE ON STEEL	-	250
MACHINERY PARTS IN FIXED CONTACT	-	125
SHAFT JOURNAL	RC6	8
JOURNAL BUSHINGS	RC6	16
SOLID BUSHING IN BASE (TO 1/4" WALL)	FN1	63
SOLID BUSHING IN BASE (OVER 1/4" WALL)	FN2	63
HUBS ON SHAFTS (TO 2" BORE)	FN2	32
HUBS ON SHAFTS (OVER 2" BORE)	FN2	63
TURNED BOLTS IN FINISHED HOLES	LC6	63
SPLIT BUSHING IN BASE	LC1	125
SLIDING BEARINGS	RC6	32
KEYS AND KEYWAYS	LC3	63
SHAFTS	-	63

   THE ABOVE FITS FOR CYLINDRICAL PARTS SHALL ALSO APPLY TO THE MAJOR DIMENSIONS OF NON-CYLINDRICAL PARTS.

7. MODEL NUMBERS AND DETAILS OF STANDARD COMPONENTS ARE BASED ON MANUFACTURER'S CATALOG DATA CURRENT AT THE TIME THE PLANS WERE PREPARED. THE MODELS SPECIFIED ARE ONLY TO ESTABLISH A STANDARD OF QUALITY AND TO DEFINE PERFORMANCE REQUIREMENTS. EQUIVALENT MODELS FROM OTHER MANUFACTURERS MAY BE SUBSTITUTED AT THE OPTION OF THE CONTRACTOR AND WITH THE APPROVAL OF THE ENGINEER.

8. ALL STEEL PARTS SHALL BE SHOP PAINTED PRIOR TO INSTALLATION IN THE FIELD. ALL FAYING SURFACES TO BE PRIME PAINTED ONLY. BEARING SURFACES OR SURFACES FOR PINS AND SLEEVES SHALL NOT BE PAINTED.

9. THE CONTRACTOR SHALL SUBMIT SHOP AND ASSEMBLY DRAWINGS BASED ON THE CONTRACT DRAWINGS AND SPECIFICATIONS FOR APPROVAL. IT WILL BE THE CONTRACTOR'S RESPONSIBILITY TO DETAIL, COORDINATE AND VERIFY THE RELATIONSHIP AND ASSEMBLY OF ALL PARTS FOR A COMPLETE WORKING SYSTEM.

10. ALL REQUIRED MACHINING, RIGGING, SPECIAL SHIMMING, LUBRICATION, PAINTING, TESTING AND ASSEMBLY SHALL BE CONSIDERED PART OF THE WORK.

11. ALL WELDMENTS ARE TO BE STRESS RELIEVED AND BLAST CLEANED AFTER WELDING AND BEFORE MACHINING.

12. ALL TRANSITIONS OF SURFACES OF MACHINERY SHALL BE BLENDED SMOOTH.

13. ALL MATING SURFACES OF MACHINERY PARTS, SUPPORTS AND EXTERNAL EDGES SHALL BE MACHINED. ALL BURRS SHALL BE REMOVED.

14. ANY MODIFICATIONS OF MACHINERY AFFECTED BY THE IMPLEMENTATION OF THE PROJECT SHALL BE INCLUDED IN THE FINAL AS BUILT DOCUMENTS.

15. THE CONTRACTOR SHALL PERFORM ALL WORK IN ACCORDANCE WITH THESE CONTRACT DRAWINGS, THE CONTRACT SPECIFICATIONS AND ALL OTHER CONTRACT DOCUMENTS.

16. THE CONTRACTOR SHALL PERFORM ALL WORK WITH CARE SO THAT ANY MATERIAL WHICH IS TO REMAIN THE PROPERTY OF VTRANS, WILL NOT BE DAMAGED. IF THE CONTRACTOR DAMAGES ANY OF THESE MATERIALS, THE DAMAGED MATERIAL SHALL BE REPAIRED OR REPLACED IN A MANNER SATISFACTORY TO THE ENGINEER AT NO ADDITIONAL COST TO VTRANS.

HYDRAULIC SYSTEM NOTES

1. SHOP DRAWINGS SHALL BE SUBMITTED FOR ALL HYDRAULIC COMPONENTS AND EQUIPMENT AS REQUIRED IN THE DRAWINGS AND SPECIFICATIONS. IN ADDITION, THE FOLLOWING ADDITIONAL DATA FOR THE HYDRAULIC SYSTEM SHALL BE SUBMITTED TO THE ENGINEER FOR REVIEW:

   A. HYDRAULIC SCHEMATIC WITH BILL OF MATERIALS. HYDRAULIC SYMBOLS UTILIZED IN THE SCHEMATIC AND SHOP DRAWING SUBMITTALS SHALL BE IN ACCORDANCE WITH ANSI Y32.10.

   B. CERTIFIED DIMENSIONAL PRINTS FOR ALL MAJOR HYDRAULIC COMPONENTS. THIS SHALL INCLUDE AT A MINIMUM THE HYDRAULIC CYLINDERS, THE MANIFOLDS, THE RESERVOIR, THE PUMPS, AND THE MOTORS.

   C. HYDRAULIC POWER UNIT ASSEMBLY DRAWING INCLUDING OVERALL DIMENSIONS, BILL OF MATERIALS, LIFTING/HANDLING PROVISIONS, AND REQUIRED CLEARANCES/MAINTENANCE ENVELOPES.

   D. ENGINEERING AND PERFORMANCE DATA OF ALL ITEMS SUPPLIED, INCLUDING MATERIAL SPECIFICATIONS, PUMP EFFICIENCIES, COMPONENT CATALOG CUTS, ETC.

   E. INITIAL HYDRAULIC FILL AND FIELD FLUSHING PROCEDURE.

   F. COMPLETE PIPING LAYOUTS AND DETAILS, INCLUDING FITTINGS, LENGTHS, SUPPORT TYPES, SUPPORT LOCATIONS.

2. THE CONTRACTOR SHALL FURNISH MAINTENANCE AND OPERATION MANUALS GIVING COMPLETE INSTRUCTIONS RELATIVE TO ASSEMBLY, INSTALLATION, OPERATION, ADJUSTMENT, ALIGNMENT, LUBRICATION, MAINTENANCE, DISASSEMBLY, FILLING, FLUSHING, AND VENTING. THE MANUAL SHALL INCLUDE A COMPLETE PARTS LISTS AND ALL SHOP DRAWINGS AND CUTSHEETS FOR THE INSTALLED HYDRAULIC SYSTEM (PAID UNDER THE HYDRAULIC POWER UNIT ITEM).

3. PROVIDE A WARNING SIGN IN HYDRAULICS HOUSE TO RELIEVE ACCUMULATOR PRESSURE BEFORE WORKING ON HYDRAULIC SYSTEM (PAID UNDER THE HYDRAULIC POWER UNIT ITEM).

4. THE HYDRAULIC SYSTEM SHALL HAVE HIGH POINT VENTS AND LOW POINT DRAINS.

5. THE HYDRAULIC SYSTEM SHALL BE FLUSHED TO A MINIMUM ISO 4406 CLEANLINESS LEVEL OF 16/14/12. IF ANY COMPONENT REQUIRED A HIGHER CLEANLINESS THAT LEVEL SHALL BE MET.

ABBREVIATIONS

ASTM - AMERICAN SOCIETY FOR TESTING AND MATERIALS

CL - CENTERLINE

DIA - DIAMETER

DWG - DRAWING

FT - FEET

HP - HORSEPOWER

HS - HIGH STRENGTH

KIPS - KILOPOUNDS

LBS - POUNDS

MK - MARK

MPT - MAINTENANCE AND PROTECTION OF TRAFFIC

QTY - QUANTITY

SS - STAINLESS STEEL

TYP - TYPICAL

USCG - UNITED STATES COAST GUARD

BC - BOLT CIRCLE

TOLERANCES

UNLESS OTHERWISE INDICATED OR REQUIRED FOR THE PROPER ASSEMBLY OF THE PARTS, DIMENSIONAL TOLERANCES OF MACHINERY IN GENERAL SHALL BE AS FOLLOWS:

SURFACE	TOLERANCE
MACHINED (TO 1")	+/-0.015"
MACHINED (OVER 1")	+/-0.030"
ROLLED	+/-0.030"
COMPONENT LOCATIONS	+/-0.030"
BOLT HOLE LOCATIONS	+/-0.030"
ANGULAR	+/-0.5°

SHIM PACK TABLE		
	THICKNESS	QTY
SHIM PACK CONSISTING OF THE FOLLOWING THICKNESSES AND QUANTITIES ASTM A240 TYPE 316	1/2"	1
	1/4"	1
	1/8"	1
	1/16"	1
	1/32"	1
	1/64"	2

PRELIMINARY PLANS

HDR

PROJECT NAME: NORTH HERO GRAND ISLE BRIDGE
PROJECT NUMBER: BHF 028-1(26)

FILE NAME: z12b142mechnote.dgn
PROJECT LEADER: T. FRENCH
DESIGNED BY: C. MADDEN
MECHANICAL GENERAL NOTES

PLOT DATE: 10/7/2016
DRAWN BY: C. MADDEN
CHECKED BY: P. JAKUBICKI
SHEET 79 OF 172

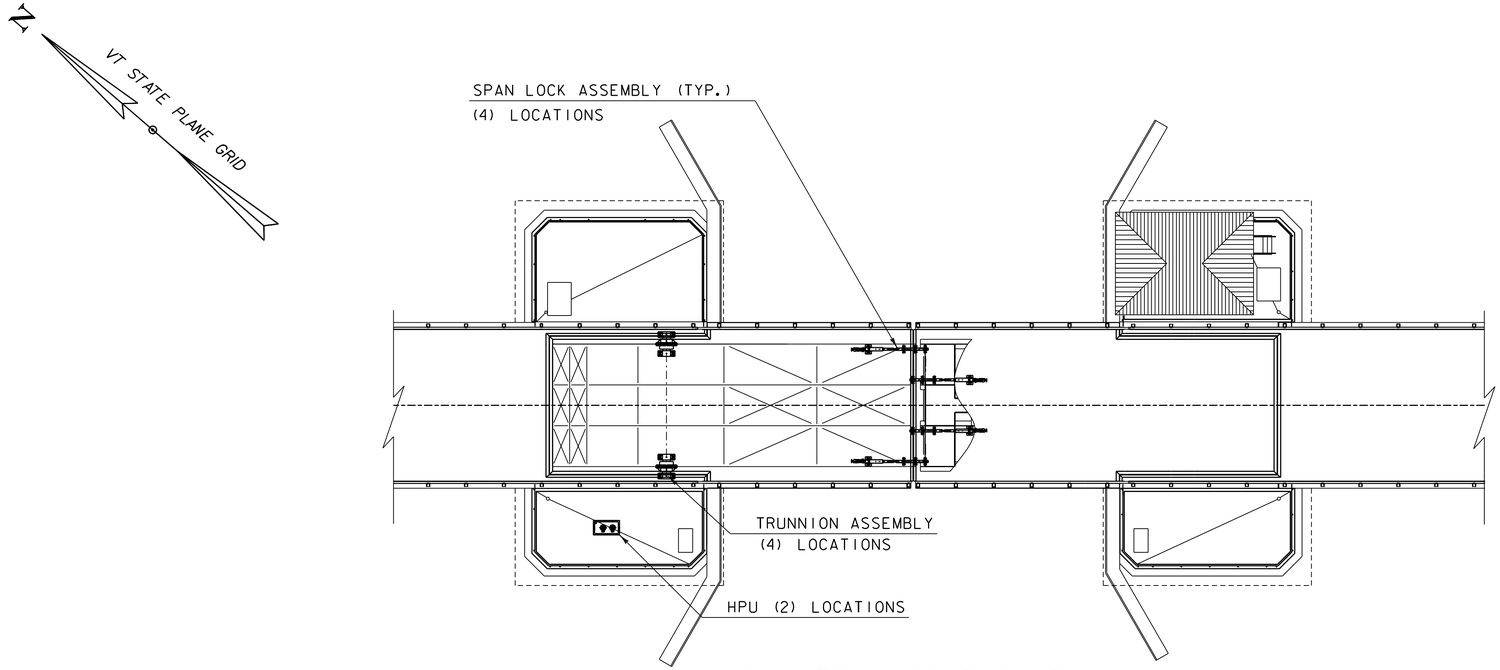

MACHINERY LOCATION PLAN

SCALE 1/16" = 1'-0"
16' 0 16'

SPAN OPERATING TIME

1. OPERATING MACHINERY IS DESIGNED TO ACCELERATE, RUN AT CONSTANT SPEED AND DECELERATE THE SPAN IN APPROXIMATELY 90 SECONDS. THE FULLY OPEN SPAN ANGLE IS 78°.
2. THE SPAN SHALL ACCELERATE UNIFORMLY FROM A STATIONARY POSITION TO FULL SPEED IN APPROXIMATELY 10 SECONDS. THE SPAN SHALL DECELERATE TO CREEP SPEED IN APPROXIMATELY 8 SECONDS.

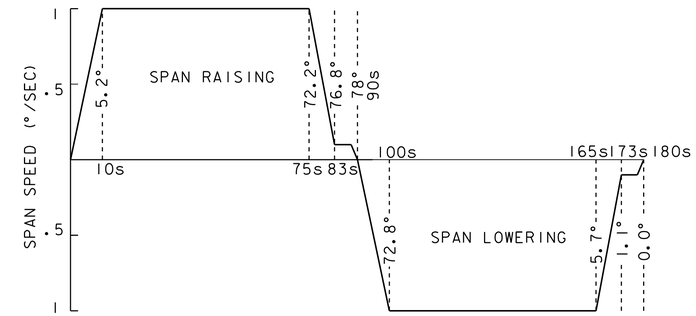

PROPOSED SPAN OPERATING CURVE

NOTES:

1. MACHINERY TO BE CONSIDERED SYMMETRICAL ACROSS THE CHANNEL CENTER LINE WITH THE EXCEPTION OF THE SPAN LOCKS.
2. INSTRUMENTATION, BUMPER BLOCKS AND HYDRAULIC PIPING NOT SHOWN.

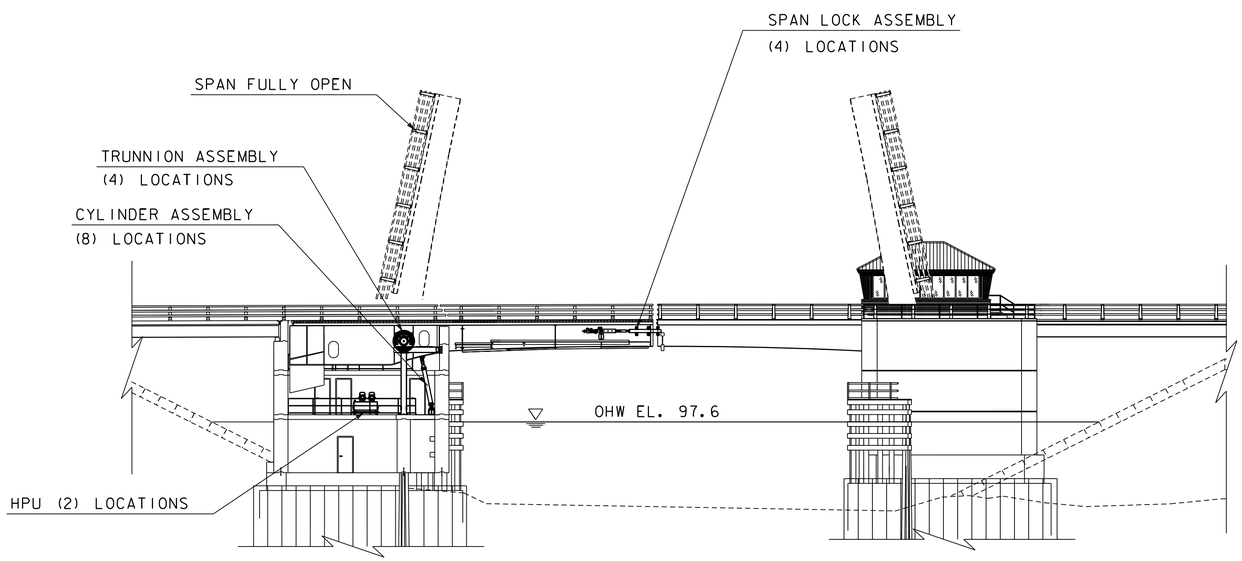

MACHINERY LOCATION ELEVATION

SCALE 1/16" = 1'-0"
16' 0 16'

PRELIMINARY PLANS

PROJECT NAME: NORTH HERO GRAND ISLE BRIDGE	
PROJECT NUMBER: BHF 028-1(26)	
FILE NAME: zl2br142mechpe.dgn	PLOT DATE: 10/7/2016
PROJECT LEADER: T. FRENCH	DRAWN BY: C. MADDEN
DESIGNED BY: C. MADDEN	CHECKED BY: P. JAKUBICKI
MECHANICAL PLAN & ELEVATION	SHEET 80 OF 172

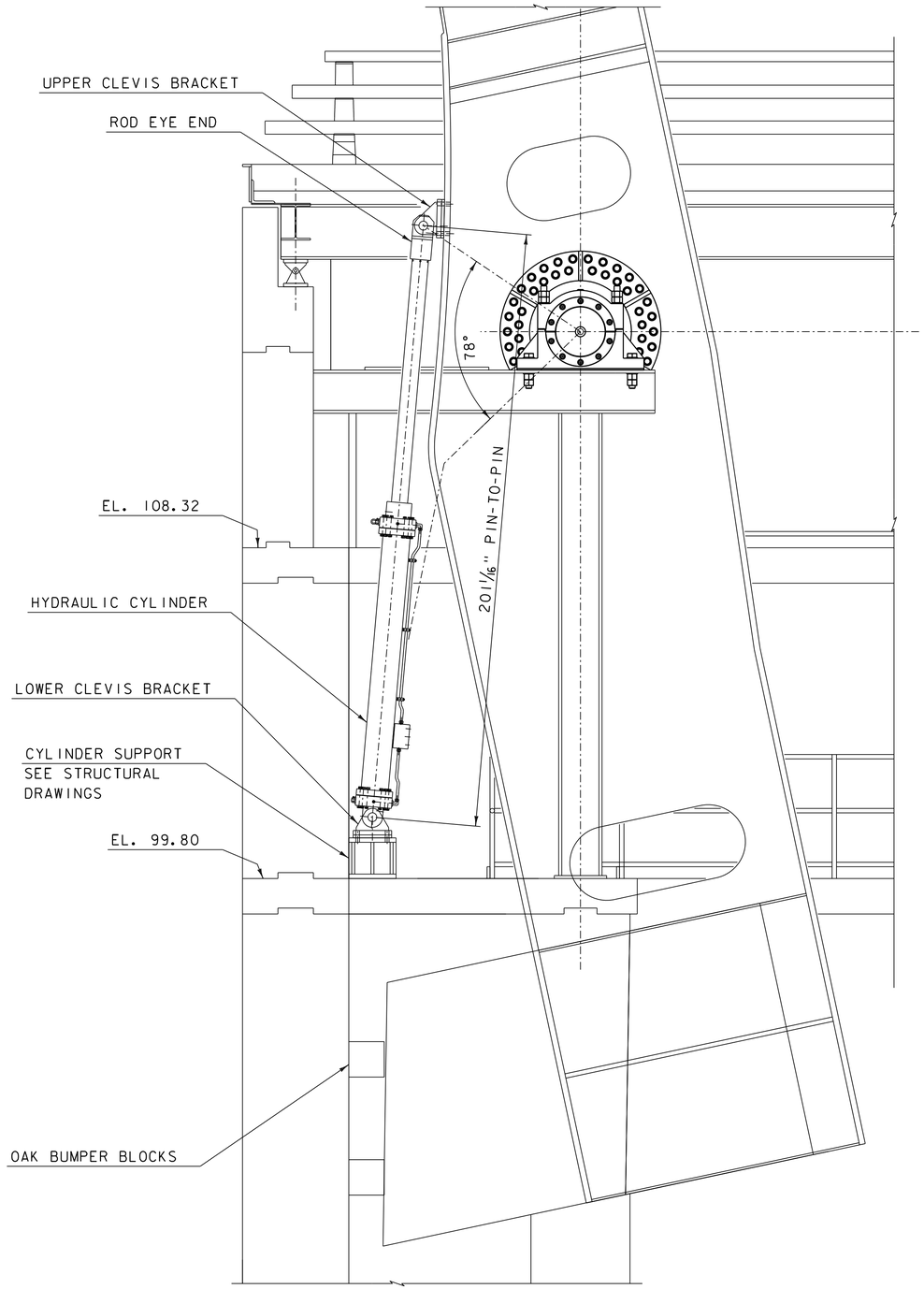

HYDRAULIC CYLINDER ATTACHMENT

SCALE 1/2" = 1'-0"

24 0 24

SPAN IS OPEN AT 78° AND STOPS ON BUMPERS
DECK AND FENDER NOT SHOWN FOR CLARITY

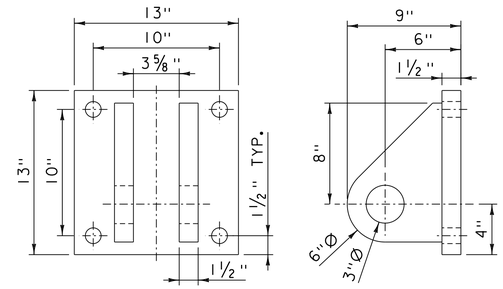

UPPER CLEVIS BRACKET

SCALE 2" = 1'-0"

6 0 6

MATERIAL: ASTM A572 GR 50

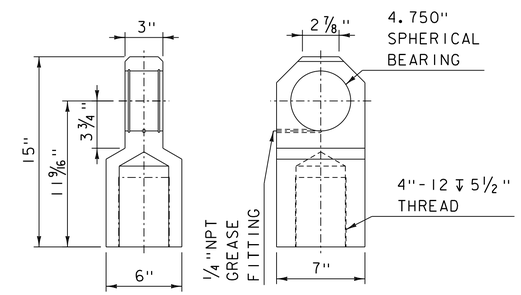

ROD EYE END

SCALE 2" = 1'-0"

6 0 6

MATERIAL: ASTM A572 GR 50

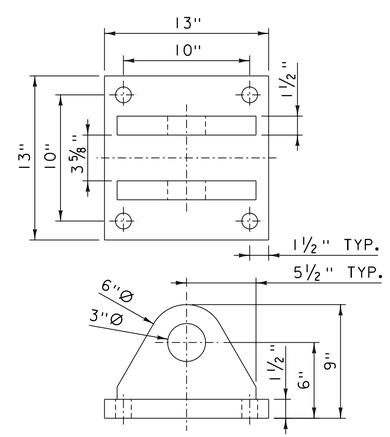

LOWER CLEVIS BRACKET

SCALE 2" = 1'-0"

6 0 6

MATERIAL: ASTM A572 GR 50

OPERATING MACHINERY BILL OF MATERIALS

ITEM	QTY.	DESCRIPTION
MODIFIED HYDRAULIC CYLINDER	8	SEE CYLINDER AND CONNECTION DETAILS
UPPER CLEVIS BRACKET	8	
LOWER CLEVIS BRACKET	8	
ROD EYE END	8	
UPPER CLEVIS PIN	8	
LOWER CLEVIS PIN	8	
UPPER CLEVIS SHIM PACK	8	
LOWER CLEVIS SHIM PACK	8	
BRACKET BOLTS	64	ASTM A449
BRACKET WASHERS	128	ASTM F436
BRACKET NUTS	128	ASTM A563

PRELIMINARY PLANS

PROJECT NAME: NORTH HERO GRAND ISLE BRIDGE
PROJECT NUMBER: BHF 028-1(26)

FILE NAME: zl2bl42supmach2.dgn
PROJECT LEADER: T. FRENCH
DESIGNED BY: C. MADDEN
OPERATING MACHINERY ASSEMBLY

PLOT DATE: 10/7/2016
DRAWN BY: C. MADDEN
CHECKED BY: P. JAKUBICKI
SHEET 81 OF 172

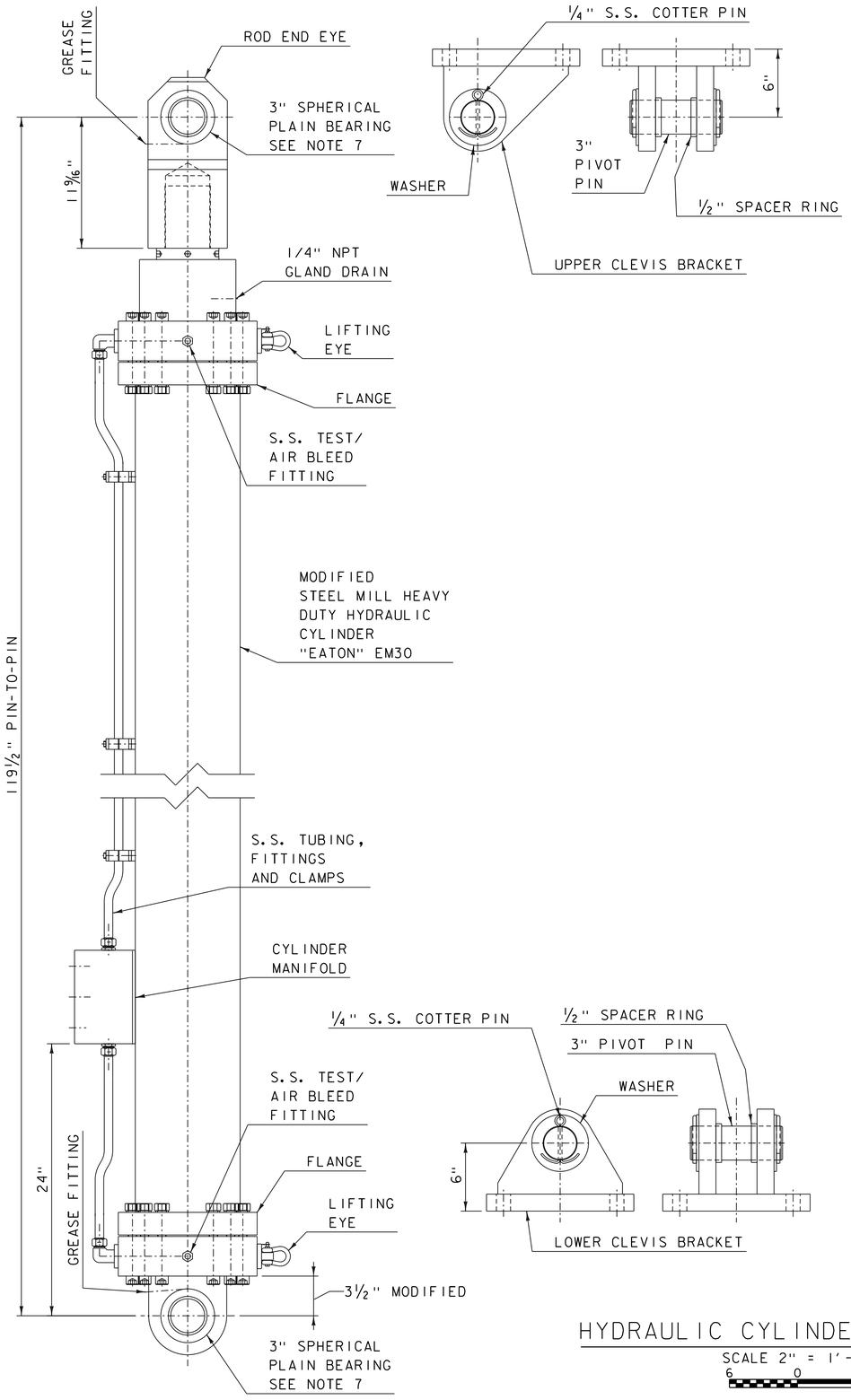

HYDRAULIC CYLINDER ASSEMBLY

SCALE 2" = 1'-0"
6 0 6

NOTES:

1. COMPLETE HYDRAULIC CYLINDER ASSEMBLY CONSISTS OF: STEEL MILL HEAVY DUTY HYDRAULIC CYLINDER, CYLINDER MANIFOLD, TUBING, UPPER CLEVIS BRACKET, (2) PIVOT PINS, SPHERICAL ROD END EYE, LOWER CLEVIS BRACKET AND ONE SET OF SPARE PARTS (ROD SEALS, PISTON SEALS, SLIDE BEARINGS). REFER TO SHEETS 79, 80, 81, 84 & 85. EIGHT (8) COMPLETE HYDRAULIC CYLINDER ASSEMBLIES ARE REQUIRED FOR THE PROJECT.

2. CYLINDER BORE DIA.: 8", ROD DIA.: 5 1/2", STROKE: 86". PIN-TO-PIN DISTANCE: 205 1/2" (FULLY EXTENDED), 119 1/2" (FULLY RETRACTED). WORKING SPEED OF CYLINDER ROD IS: 0.3 IN/SEC TO 1.2 IN/SEC. RATED OPERATING PRESSURE 1500 PSI EXTEND, 3000 PSI RETRACT. CYLINDER SHALL BE OF STEEL MILL HEAVY DUTY DESIGN, MODIFIED OF THE "EATON" EM30 SERIES. THE DESIGN SHALL CONFORM TO AASHTO, LRFD 2007 STANDARD SPECIFICATIONS FOR MOVABLE HIGHWAY BRIDGES, ALL INTERIM REVISIONS AND ASME B31.1. FLANGES ARE TO BE WELDED TO THE CYLINDER TUBE. THE CYLINDER HEAD AND CAP MUST BE CONNECTED TO THE CYLINDER FLANGES WITH CORROSION RESISTANT BOLTS.

3. ACTUAL FIELD CONDITIONS MAY VARY. THE CONTRACTOR SHALL VERIFY ALL DIMENSIONS BEFORE DESIGNING, FABRICATING, MACHINING OR ORDERING.

4. A S.S. NAME PLATE STAMPED WITH MODEL NO., MANUFACTURER, BORE DIA., ROD DIA., STROKE, RATED PRESSURE, TEST PRESSURE AND WEIGHT SHALL BE SECURELY ATTACHED IN THE CAP END AREA. INDIVIDUALLY SERIALIZE EACH CYLINDER. WARNING SAFETY LABELS "HIGH PRESSURE OIL LEAKS" SHALL BE PLACED NEAR THE TEST FITTING/AIR BLEEDS.

5. PROPOSED MATERIALS. THE ROD MATERIAL IS TO BE STAINLESS STEEL ASTM A276 TYPE 316, TRIPLE CHROME PLATED (.004"/.008" TOTAL) PER QQ -C320B CLASS 2E. CHROMED SURFACE ROUGHNESS IS TO BE 8 RMS. THE CYLINDER TUBE MATERIAL IS TO BE ASTM A106-GRADE B OR ASTM A333-GRADE 6, SEAMLESS STEEL TUBE. PRIMARY MATERIALS: UPPER/LOWER CLEVIS BRACKETS (ASTM A709 GRADE 50), PIVOT PINS (ASTM A668 CLASS K), ROD END EYE (ASTM A668 CLASS D), MANIFOLD AND PISTON (ASTM A536 GRADE 65-45-12), 0.750"OD x 0.065"W TUBING (ASTM A269 TYPE 304L). THESE MATERIALS SHALL BE CHARPY TESTED. STRESS RELIEVING AFTER WELDING BY CONTROLLED HEATING AND CONTROLLED COOLING IS REQUIRED. ALL SUBASSEMBLIES SHALL BE ULTRASONIC TESTED IN ACCORDANCE WITH ASTM A609, METHOD A, QUALITY LEVEL 3. ALL TEST REPORTS AND MATERIAL CERTIFICATES FROM STEEL MILLS SHALL BE SUBMITTED FOR APPROVAL. PAINT: 2 COATS OF MASTIC EPOXY PRIMER, 2 COATS OF MACHINERY ENAMEL, FEDERAL SAFETY GREEN TOPCOAT. MINIMUM 2 MIL DFT PER COAT. DO NOT PAINT S.S. TUBING AND S.S. FITTINGS.

6. THE SYSTEM DESIGN IS BASED UPON HYDRAULIC OIL: "MOBIL" DTE-13M, CLEANLINESS LEVEL ISO 18/16/13 TO 20/18/15 (NAS 7 TO 9). RATED FOR OUTDOOR APPLICATION IN A HARSH AIR ENVIRONMENT WITH AMBIENT TEMPERATURE: 0°F TO 100°F.

7. SPHERICAL PLAIN BEARINGS ARE TO BE "RBC LUBRON" SL30/958/17-4PH OR SIMILAR. INNER RING SHALL BE C95800 BRONZE WITH EMBODIED SOLID LUBRICANT ON THE SPHERICAL SURFACE. OUTER RING SHALL BE 17-4PH STAINLESS STEEL (CONDITION H1025, HARDNESS 331HB) SEAL-WIPERS FOR BOTH ENDS ARE REQUIRED. THE BEARING HOUSINGS AT THE CAP-END AND ROD-END SHALL BE PROVIDED WITH ZERK GREASE FITTINGS TO FILL THE GAP BETWEEN THE INNER AND OUTER RING WITH GREASE TO KEEP MOISTURE OUT. THE GREASE SHALL BE COMPATIBLE WITH THE SOLID LUBRICANT. ROD-END MOUNTING AND CAP-END MOUNTING OF CYLINDER SHALL ALLOW TRANSVERSE TILT UP TO 3° ANGLE ON EACH DIRECTION.

8. NO END CUSHIONING IS REQUIRED.

9. THE ROD SEALS SHALL BE REPLACEABLE WITHOUT DISMANTLING OF THE ROD ATTACHMENT. S.S. ADJUSTING SHIMS SHALL BE PROVIDED TO CORRECT THE COMPRESSION OF THE ROD SEALS DUE TO PACKING WEAR. PROVIDE A GLAND DRAIN PASSAGE (WITH 1/4" NPT PORT) TO REMOVE POTENTIAL ACCUMULATION OF OIL FROM THE CAVITY BEHIND THE GLAND WIPER SEAL.

10. BOTH ROD SEALS AND PISTON SEALS WITH SLIDE BEARINGS SHALL PROVIDE A LONG LIFE FOR THE CYLINDER WITHOUT "STICK-SLIP" BEHAVIOR. CYLINDER DESIGN LIFE SHALL BE BASED ON 25 YEARS OF NORMAL BRIDGE OPERATING SERVICE (APPROXIMATELY 5000 OPERATIONS PER YEAR).

11. BOTH PRESSURE RELIEF VALVES IN THE CYLINDER MANIFOLD SHALL BE FACTORY-SET, WIRE-AND-LEAD SEALED AND STAMPED WITH THE VALVE MANUFACTURER'S LOGO AND SETTING PRESSURE (TAMPER RESISTANT).

12. PRESSURE TEST THE CYLINDER ASSEMBLY (CYLINDER, TUBING AND MANIFOLD) AT 4500 PSI FOR BOTH SIDES, FOR A 15 MIN DURATION EACH SIDE. INSPECT FOR DAMAGE OR LEAKS. ANY LEAKAGE SHALL BE JUSTIFICATION FOR REJECTION.

13. ALL PARTS AND CONNECTIONS OF THE CYLINDER ASSEMBLY SHALL HAVE A SAFETY FACTOR OF 4:1 BASED ON MATERIAL ULTIMATE STRENGTH AND 67,000 LBS PUSH-PULL LOAD. THE THREADED CONNECTION BETWEEN THE CYLINDER ROD END AND THE ROD EYE SHALL BE TORQUED TO PRODUCE A JOINT CLAMP TENSILE STRENGTH IN THE ROD EQUAL TO 1% TO 5% OF ITS YIELD STRENGTH.

14. BOTH THE CYLINDER FLANGE AND THE ROD END EYE MUST BE ELECTRICALLY BONDED TOGETHER TO THE MAIN BRIDGE GROUND (TO PROTECT FROM STRAY CURRENT).

15. ALL STEEL MATERIALS TO MEET FHWA BUY AMERICA CERTIFICATION (23 USC 313 AND 23 CFR 635-410).

16. SEE SPECIFICATIONS SECTION 900.645 SPECIAL PROVISIONS (HYDRAULIC CYLINDERS) FOR FURTHER SPARE PARTS AND TESTING/COMMISSIONING REQUIREMENTS.

PRELIMINARY PLANS

PROJECT NAME: NORTH HERO GRAND ISLE BRIDGE
PROJECT NUMBER: BHF 028-1(26)

FILE NAME: z12b142opmach2.dgn
PROJECT LEADER: T. FRENCH
DESIGNED BY: W. KAPLO
CYLINDER AND CONNECTION DETAILS

PLOT DATE: 10/7/2016
DRAWN BY: W. KAPLO
CHECKED BY: P. JAKUBICKI
SHEET 82 OF 172

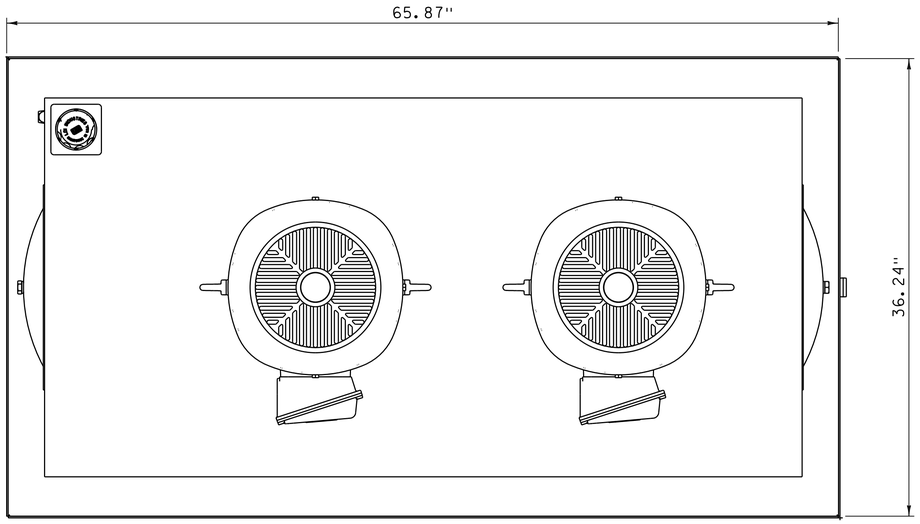

VIEW A-A

SCALE 2" = 1'-0"

6" 0 6"

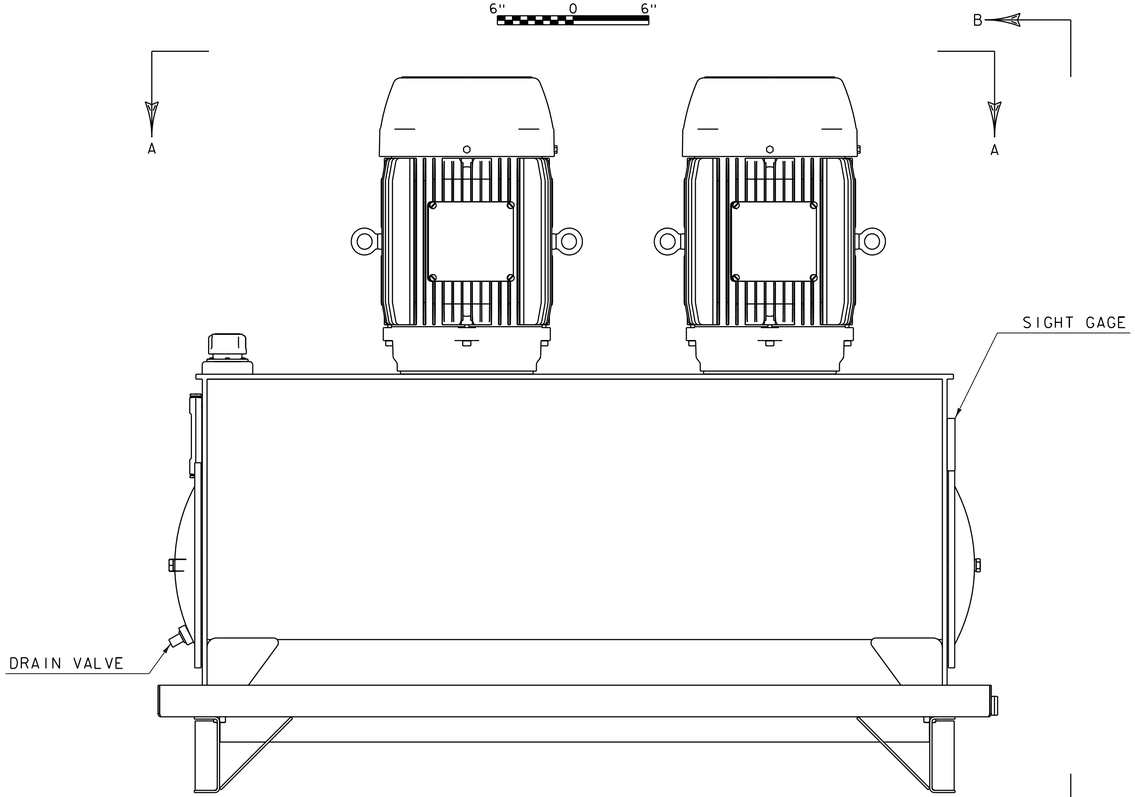

HPU ASSEMBLY

SCALE 2" = 1'-0"

6" 0 6"

QUANTITY: (2)

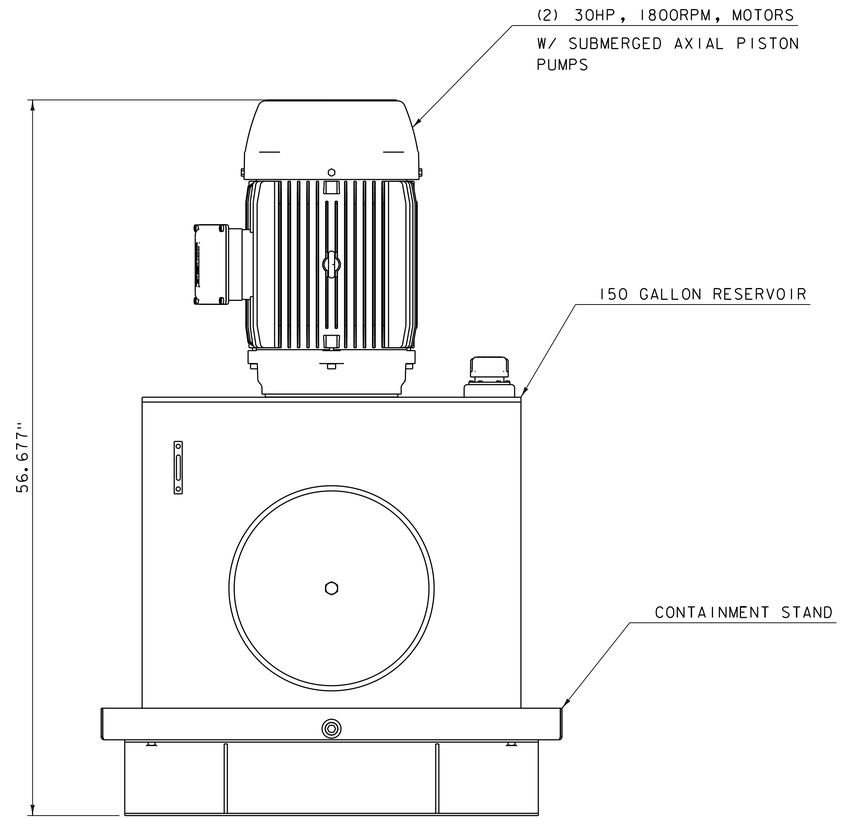

VIEW B-B

SCALE 2" = 1'-0"

6" 0 6"

HYDRAULIC POWER UNIT BILL OF MATERIALS

ITEM	QTY.	DESCRIPTION
ELECTRIC MOTOR	4	
PUMP	4	
RESERVOIR	2	
CONTAINMENT STAND	2	
RETURN FILTER	-	
RELIEF VALVE	-	
PRESSURE INDICATOR	-	
FLUID FILL PORT	-	
BREATHER	-	
CYLINDER SUPPORT	-	
TEMPERATURE INDICATOR	-	
PRESSURE FILTER	-	

NOTES:

1. THE HYDRAULIC POWER UNIT SHALL BE INSTALLED WITH VIBRATION ISOLATION MOUNTS.

PRELIMINARY PLANS

PROJECT NAME: NORTH HERO GRAND ISLE BRIDGE

PROJECT NUMBER: BHF 028-1(26)

FILE NAME: z12b142opmach3.dgn

PROJECT LEADER: T. FRENCH

DESIGNED BY: C. MADDEN

HPU DETAILS

PLOT DATE: 10/7/2016

DRAWN BY: C. MADDEN

CHECKED BY: P. JAKUBICKI

SHEET 83 OF 172

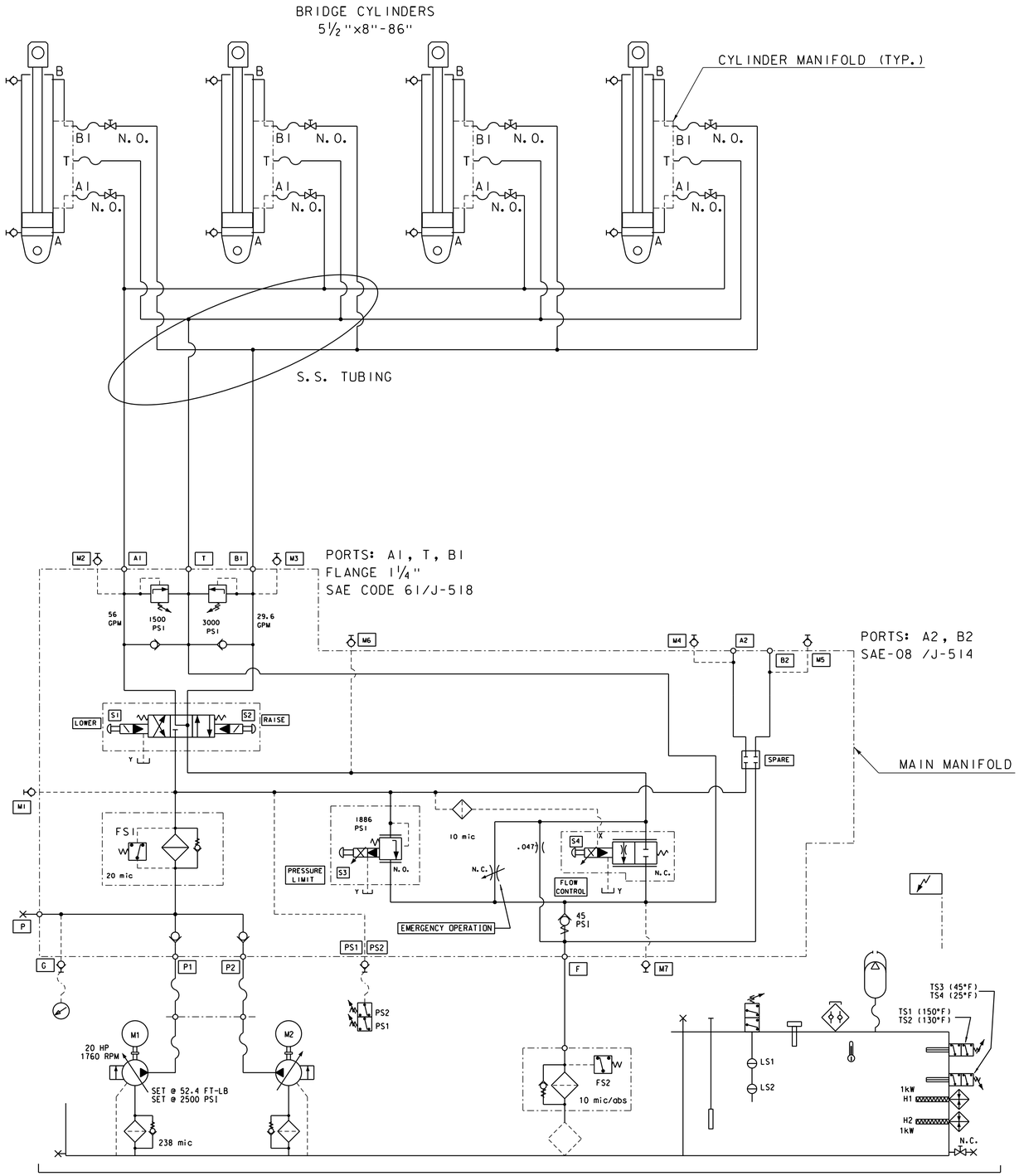

HYDRAULIC SCHEMATIC

NOT TO SCALE

PIER 1 SYSTEM SHOWN - PIER 2 SYSTEM SIMILAR

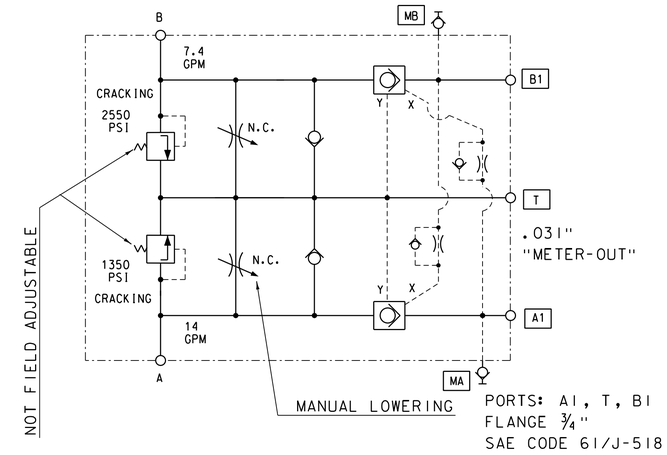

CYLINDER MANIFOLD SCHEMATIC

PRELIMINARY PLANS

PROJECT NAME:	NORTH HERO GRAND ISLE BRIDGE
PROJECT NUMBER:	BHF 028-1(26)

FILE NAME: zl2bl42opmach4.dgn	PLOT DATE: 10/7/2016
PROJECT LEADER: T. FRENCH	DRAWN BY: W. KAPLO
DESIGNED BY: W. KAPLO	CHECKED BY: P. JAKUBICKI
HYDRAULIC SCHEMATIC	SHEET 84 OF 172

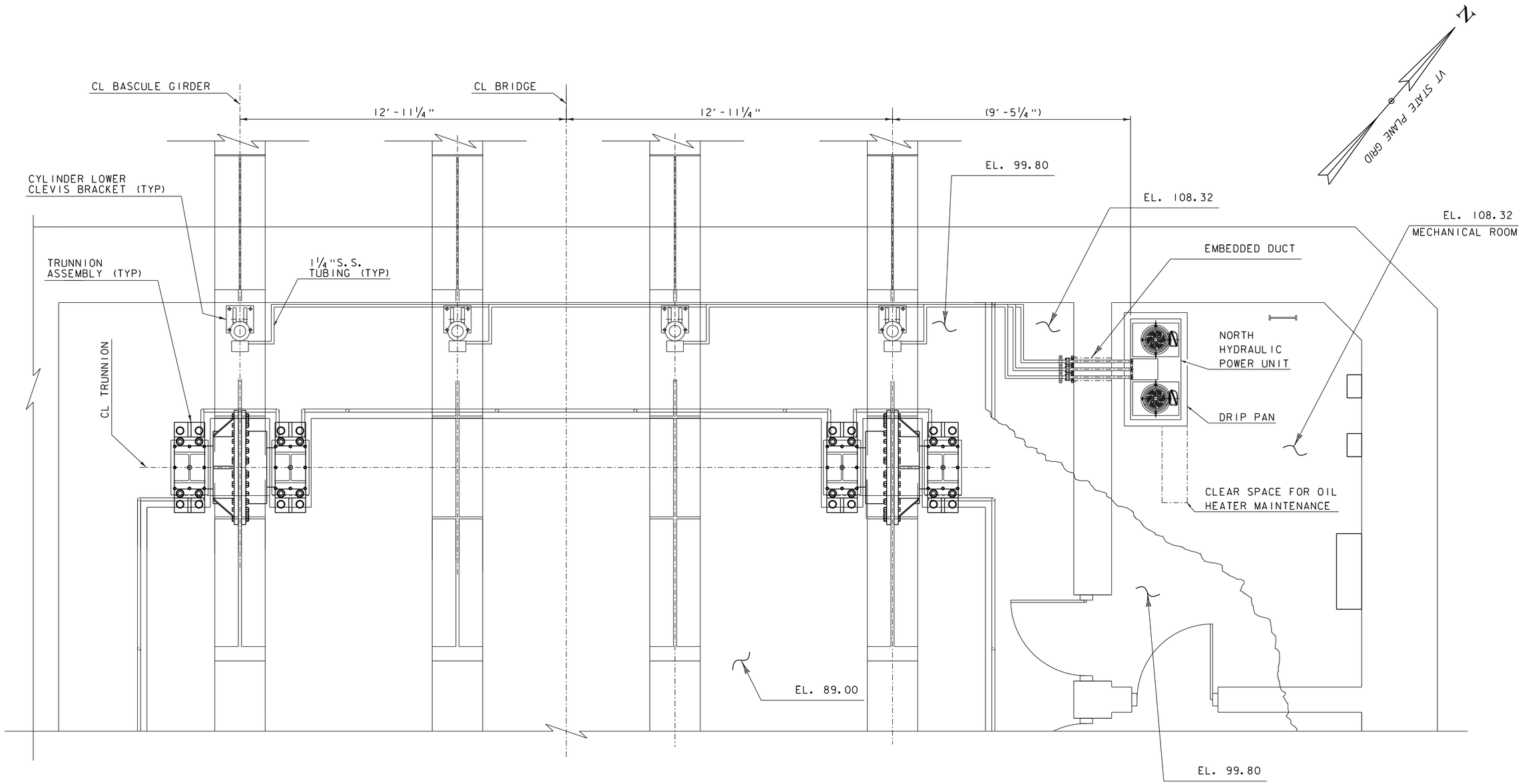

HYDRAULIC SYSTEM LAYOUT

SCALE 1/2" = 1'-0"

2' 0 2'

PLAN OF PIER 1 SHOWN - PIER 2 OPPOSITE HAND

PRELIMINARY PLANS

NOTE

1. CYLINDER UPPER CLEVIS BRACKETS ARE NOT SHOWN FOR CLARITY.
2. ALL ¾" HOSES CONNECTED TO THE CYLINDER MANIFOLD SHALL HAVE IDENTICAL LENGTH AND FITTINGS.

HDR

PROJECT NAME: NORTH HERO GRAND ISLE BRIDGE	
PROJECT NUMBER: BHF 028-1(26)	
FILE NAME: z12b142opmach5.dgn	PLOT DATE: 10/7/2016
PROJECT LEADER: T. FRENCH	DRAWN BY: W. KAPLO
DESIGNED BY: W. KAPLO	CHECKED BY: P. DAVIS
HYDRAULIC SYSTEM LAYOUT	SHEET 85 OF 172

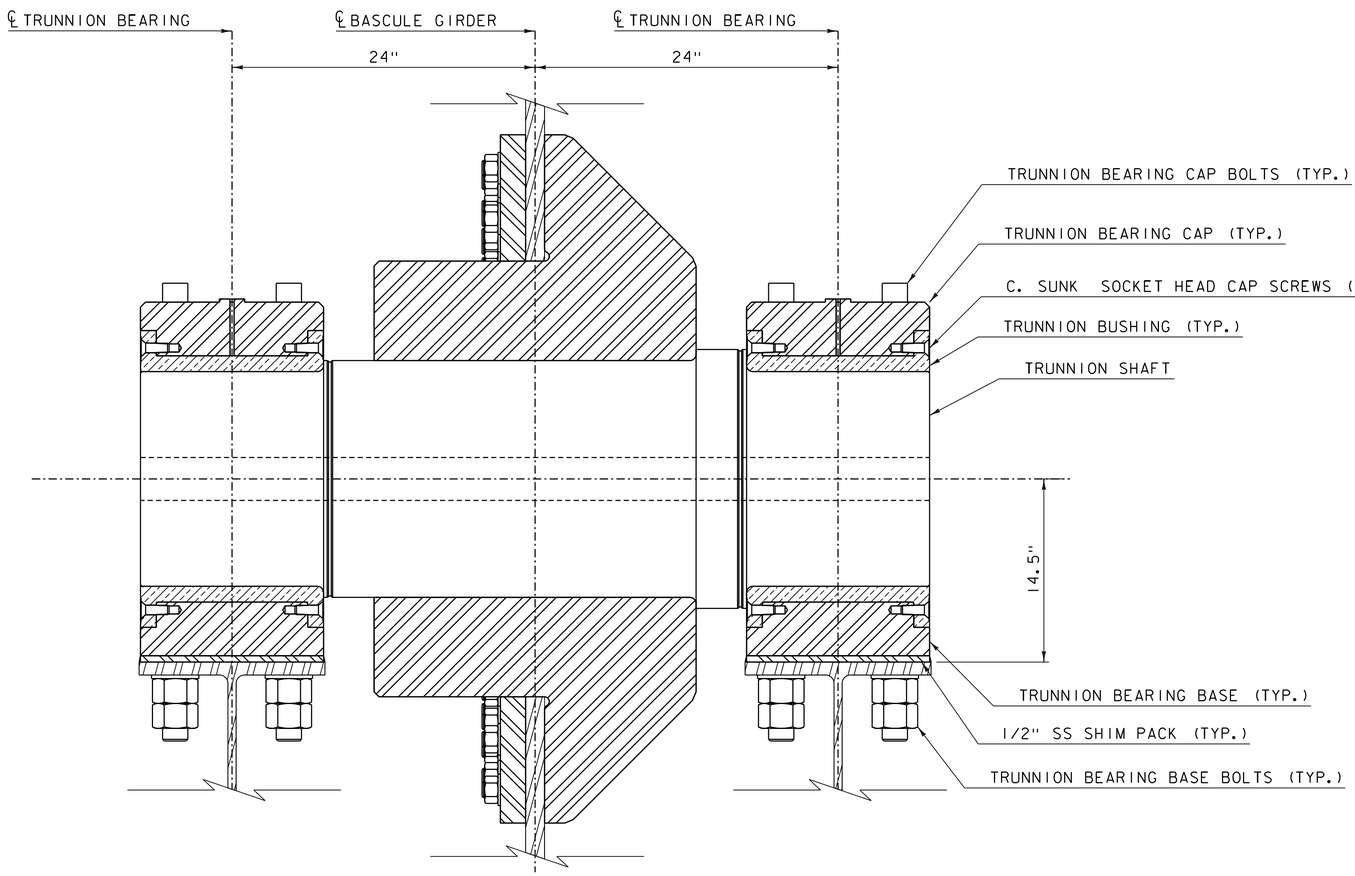

SECTION A-A

SCALE 2" = 1'-0"

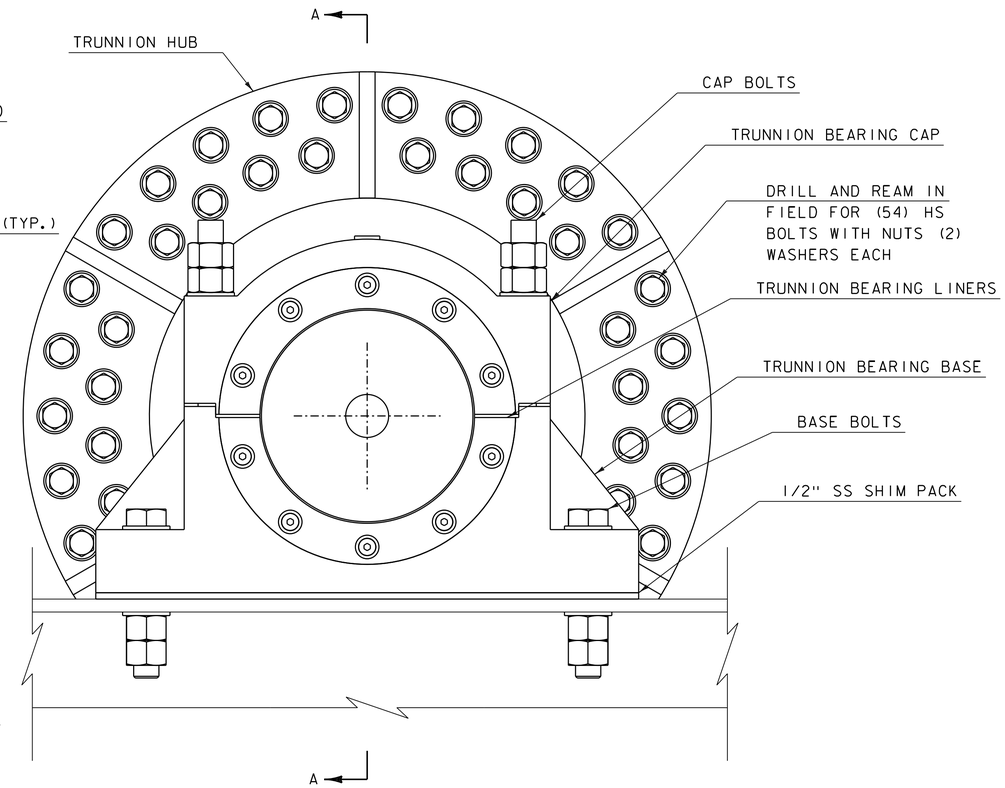

TRUNNION ASSEMBLY ELEVATION

SCALE 2" = 1'-0"

TRUNNION BILL OF MATERIALS

ITEM	QTY.	DESCRIPTION	ITEM	QTY.	DESCRIPTION
TRUNNION SHAFT	4	ASTM A668 CL K	CAP BOLT WASHER	32	ASTM F436
TRUNNION BUSHING HALF	16	ASTM B22 UNS 91100	TRUNNION BRG. BASE BOLT	32	ASTM A449
TRUNNION BEARING CAP	8	ASTM A148 GR 80-50	BASE BOLT NUT	64	ASTM A563
TRUNNION BEARING BASE	8	ASTM A148 GR 80-50	BASE BOLT WASHER	64	ASTM F436
TRUNNION HUB	4	ASTM A148 GR 90-60	TRUNNION HUB BOLT	54	ASTM A449
TRUNNION HUB RING	4	ASTM A572 GR 65	TRUNNION HUB WASHER	108	ASTM F436
TRUNNION BEARING SHIM PACK	8	STAINLESS STEEL	TRUNNION HUB NUT	54	ASTM A563
TRUNNION BRG. CAP BOLT	32	ASTM A449	DOWEL	12	
CAP BOLT NUT	64	ASTM A563	BEARING LINERS	16	BRASS LAMINATIONS

NOTES:

1. TRUNNION HUBS TO BE DOWELED TO TRUNNION SHAFT (NOT SHOWN).
2. TRUNNION HUBS, BEARINGS AND HUB RINGS TO BE GALVANIZED AND PAINTED. SEE SPECIFICATIONS SECTION 900.645 SPECIAL PROVISIONS (TRUNNION ASSEMBLIES) FOR FURTHER COATING REQUIREMENTS.

PRELIMINARY PLANS

HDR

PROJECT NAME: NORTH HERO GRAND ISLE BRIDGE
PROJECT NUMBER: BHF 028-1(26)

FILE NAME: z12b142supmach1.dgn
PROJECT LEADER: T. FRENCH
DESIGNED BY: C. MADDEN
TRUNNION ASSEMBLY

PLOT DATE: 10/7/2016
DRAWN BY: C. MADDEN
CHECKED BY: P. JAKUBICKI
SHEET 86 OF 172

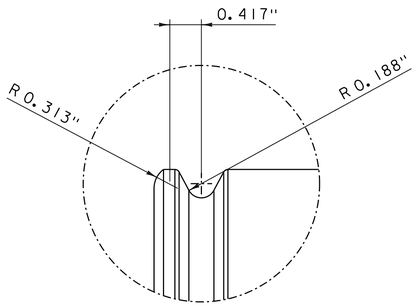

DETAIL A

SCALE 1/8" = 1'-0"

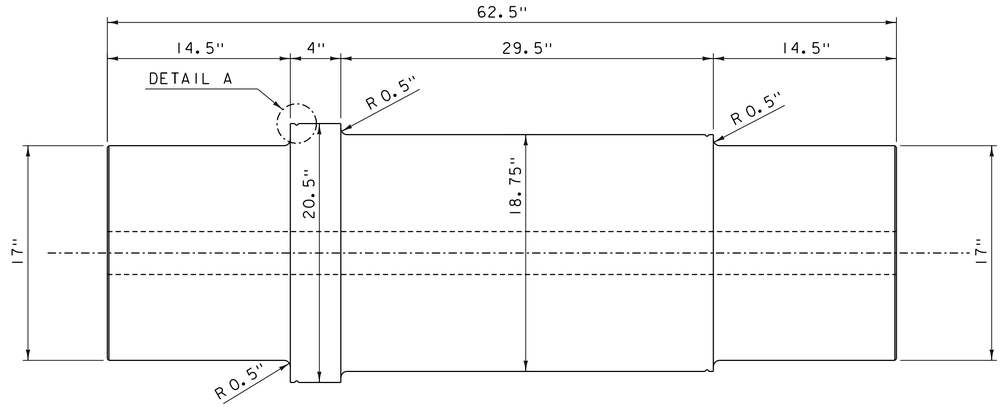

TRUNNION SHAFT

SCALE 2" = 1'-0"

QUANTITY: (4)

MATERIAL: ASTM A668 CL K

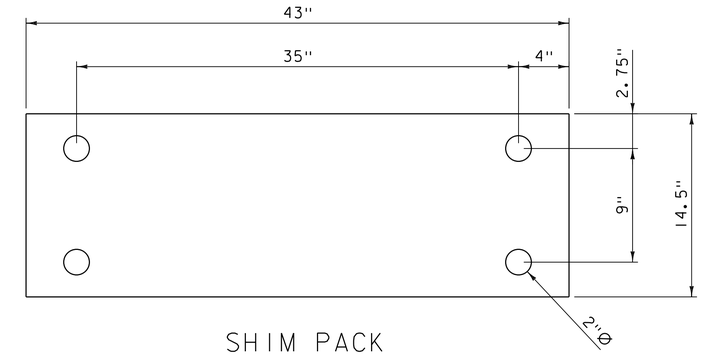

SHIM PACK

SCALE 2" = 1'-0"

QUANTITY: (8)

MATERIAL: STAINLESS STEEL

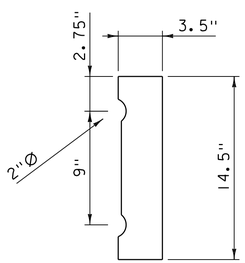

BEARING LINER

SCALE 2" = 1'-0"

QUANTITY: (16)

MATERIAL: BRASS LAMINATIONS

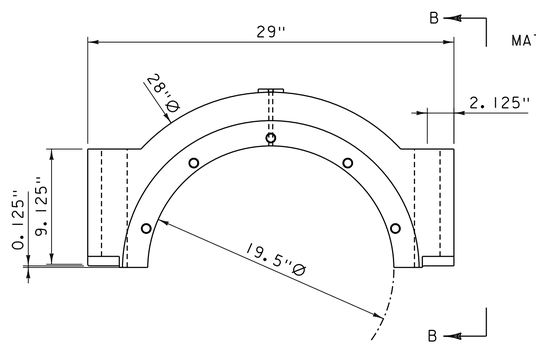

TRUNNION BEARING CAP

SCALE 2" = 1'-0"

QUANTITY: (8)

MATERIAL: ASTM A148 GR 80-50

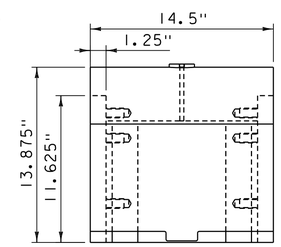

VIEW B-B

SCALE 2" = 1'-0"

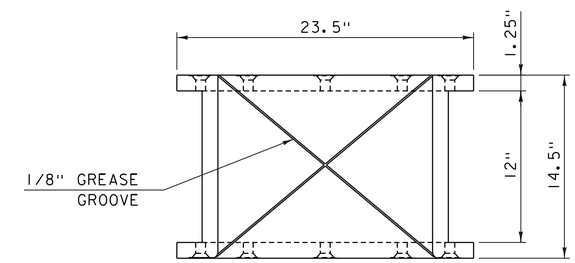

VIEW D-D

SCALE 2" = 1'-0"

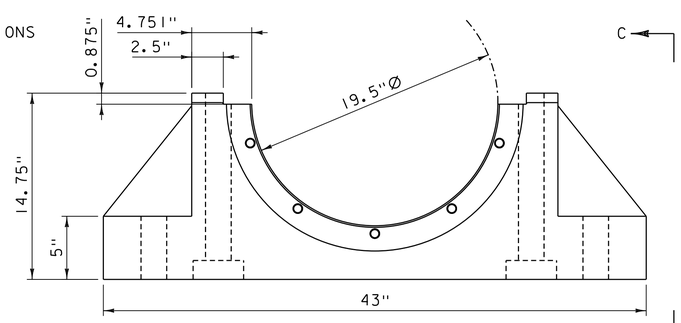

TRUNNION BEARING BASE

SCALE 2" = 1'-0"

QUANTITY: (8)

MATERIAL: ASTM A148 GR 80-50

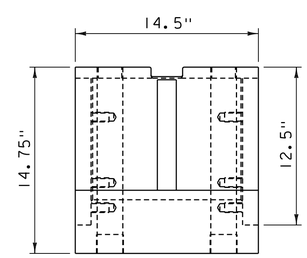

VIEW C-C

SCALE 2" = 1'-0"

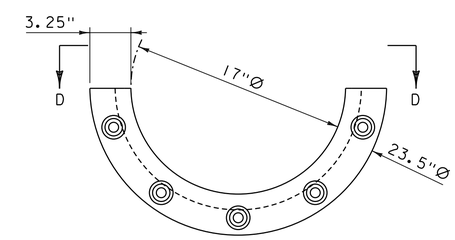

TRUNNION BUSHING HALF

SCALE 2" = 1'-0"

QUANTITY: (16)

MATERIAL: ASTM B22 UNS 91100

PRELIMINARY PLANS

PROJECT NAME: NORTH HERO GRAND ISLE BRIDGE	
PROJECT NUMBER: BHF 028-1(26)	
FILE NAME: z12b142supmach2.dgn	PLOT DATE: 10/7/2016
PROJECT LEADER: T. FRENCH	DRAWN BY: C. MADDEN
DESIGNED BY: C. MADDEN	CHECKED BY: P. JAKUBICKI
TRUNNION DETAILS 1	SHEET 87 OF 172

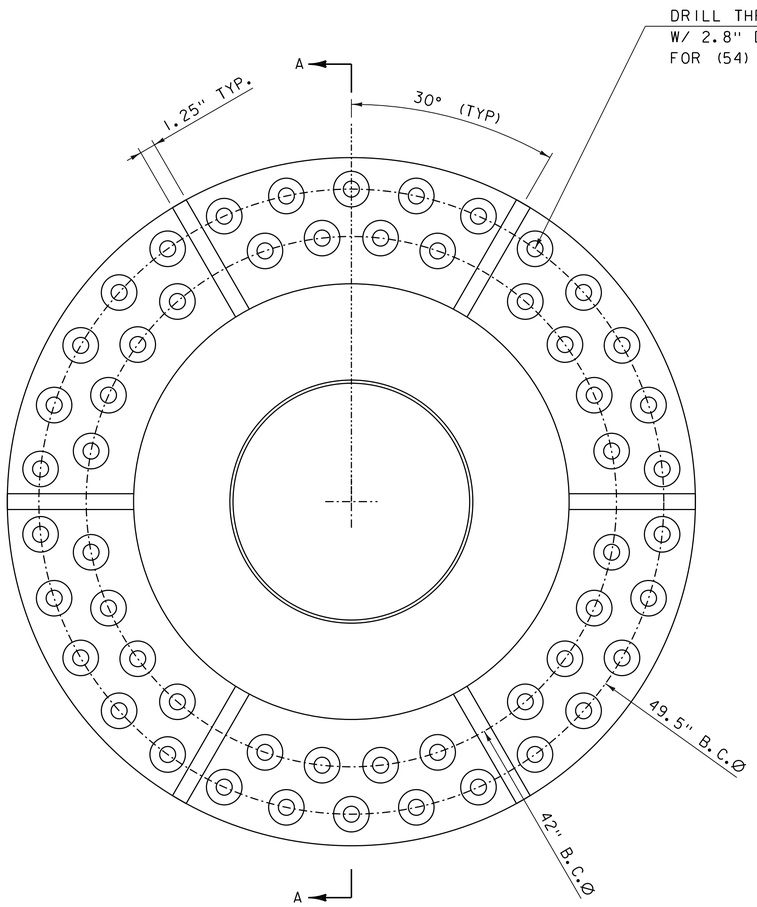

TRUNNION HUB

SCALE 2" = 1'-0"

6 0 6

QUANTITY: (4)

MATERIAL: ASTM A148 GR 90-60

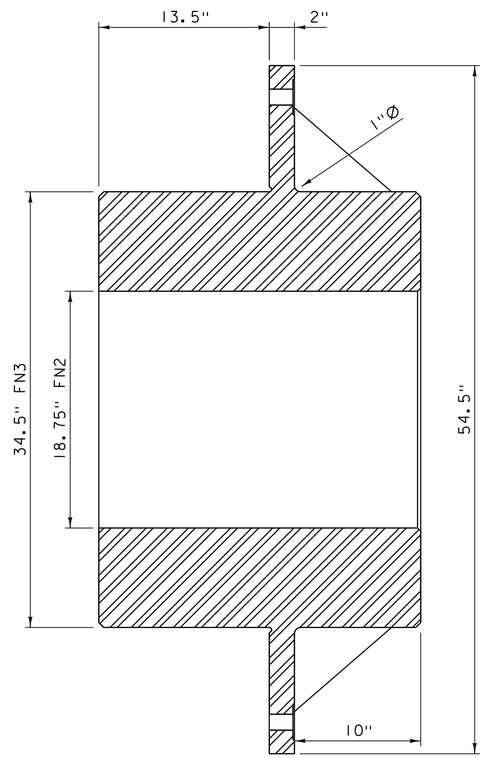

SECTION A-A

SCALE 2" = 1'-0"

6 0 6

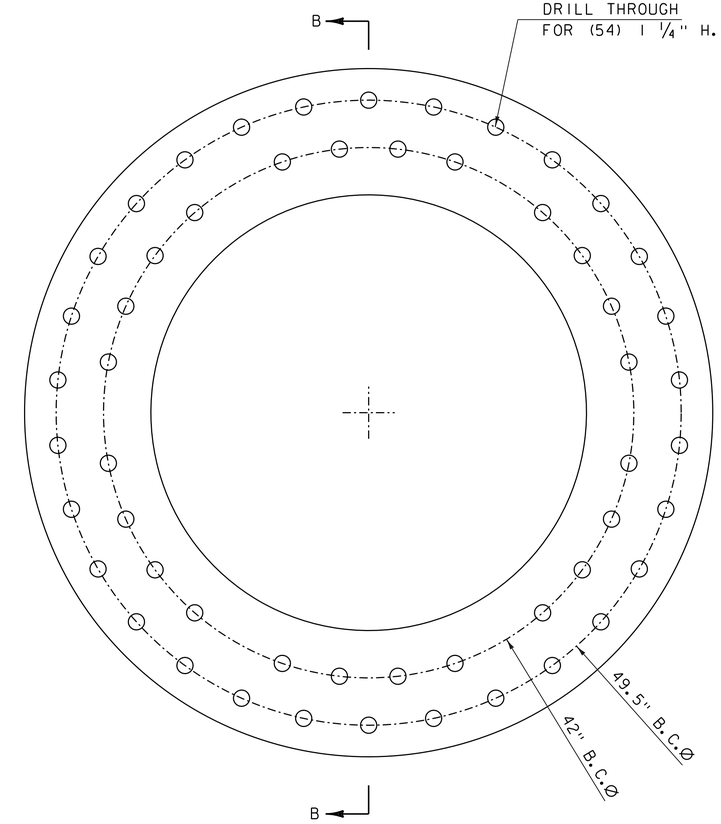

TRUNNION HUB RING

SCALE 2" = 1'-0"

6 0 6

QUANTITY: (4)

MATERIAL: ASTM A572 GR 65

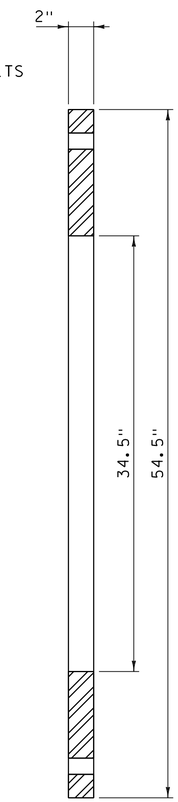

SECTION B-B

SCALE 2" = 1'-0"

6 0 6

PRELIMINARY PLANS

HDR

PROJECT NAME: NORTH HERO GRAND ISLE BRIDGE	
PROJECT NUMBER: BHF 028-1(26)	
FILE NAME: z12b142supmach3.dgn	PLOT DATE: 10/7/2016
PROJECT LEADER: T. FRENCH	DRAWN BY: C. MADDEN
DESIGNED BY: C. MADDEN	CHECKED BY: P. JAKUBICKI
TRUNNION DETAILS 2	SHEET 88 OF 172

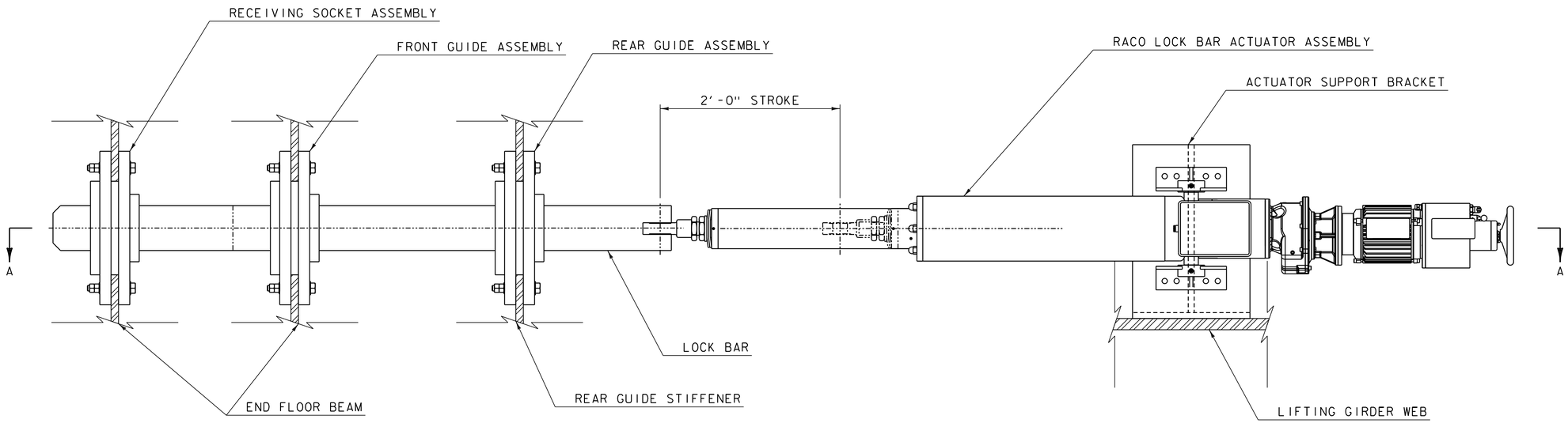

SPAN LOCK ASSEMBLY

SCALE 1½" = 1'-0"

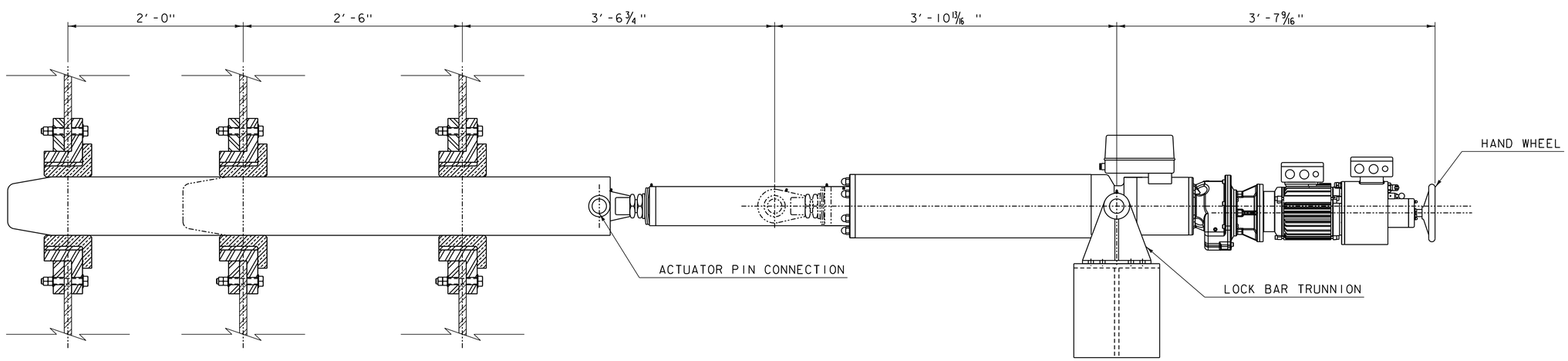

SECTION A-A

SCALE 1½" = 1'-0"

SPAN LOCK BILL OF MATERIALS		
ITEM	QTY.	DESCRIPTION
RACO ACTUATOR W/ TRUNNION MOUNT	4	
LOCK BAR	4	
LOCK BAR PIN	4	
GUIDE ASSEMBLY	8	
SOCKET ASSEMBLY	4	
MOUNTING BRACKET	4	
GUIDE/SOCKET FASTENERS	192	
MOUNTING FASTENERS	40	

NOTES:

1. SEE STRUCTURAL SHEETS FOR SPAN LOCK LOCATION.

PRELIMINARY PLANS

PROJECT NAME: NORTH HERO GRAND ISLE BRIDGE
PROJECT NUMBER: BHF 028-1(26)

FILE NAME: zl2bl42supmach4.dgn
PROJECT LEADER: T. FRENCH
DESIGNED BY: C. MADDEN
SPAN LOCK ASSEMBLY

PLOT DATE: 10/7/2016
DRAWN BY: C. MADDEN
CHECKED BY: P. JAKUBICKI
SHEET 89 OF 172

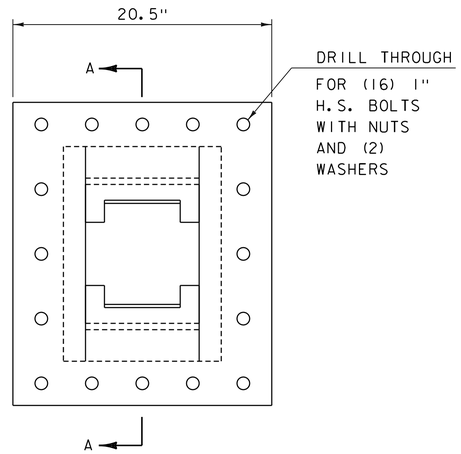

SPAN LOCK GUIDE AND SOCKET ASSEMBLY

SCALE 2" = 1'-0"

6 0 6

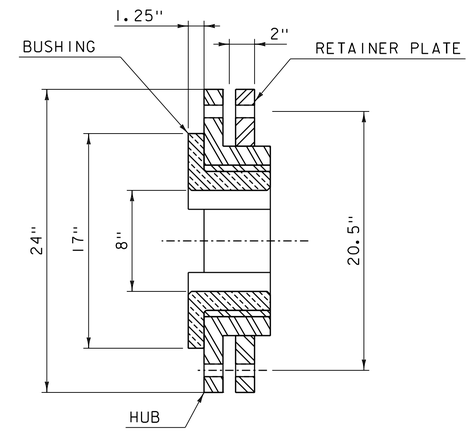

SECTION A-A

SCALE 2" = 1'-0"

6 0 6

QUANTITY: (4)

MATERIALS: BUSHING: ASTM B22 ALLOY 937

HUB AND RETAINER PLATE: ASTM A27 70-36

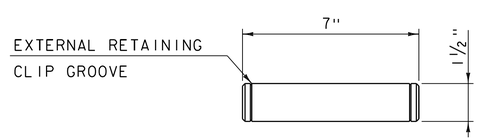

LOCK BAR CONNECTION PIN

SCALE 4" = 1'-0"

3 0 3

QUANTITY: (4)

MATERIAL: ASTM A668 CL K

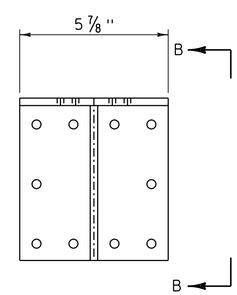

ACTUATOR MOUNT

SCALE 2" = 1'-0"

6 0 6

QUANTITY: (4)

MATERIAL: ASTM A572 GR 50

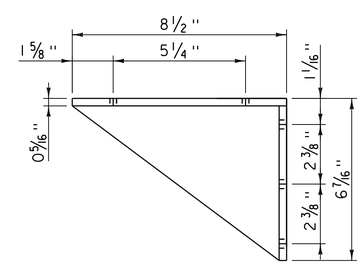

VIEW B-B

SCALE 2" = 1'-0"

6 0 6

PRELIMINARY PLANS

PROJECT NAME:	NORTH HERO GRAND ISLE BRIDGE
PROJECT NUMBER:	BHF 028-1(26)

FILE NAME: zl2bl42supmach5.dgn	PLOT DATE: 10/7/2016
PROJECT LEADER: T. FRENCH	DRAWN BY: C. MADDEN
DESIGNED BY: C. MADDEN	CHECKED BY: P. JAKUBICKI
SPAN LOCK DETAILS	SHEET 90 OF 172

ELECTRICAL GENERAL NOTES:

1. DRAWINGS ARE DIAGRAMMATC IN NATURE AND ARE NOT INDENDED TO SHOW THE FULL EXTENT OF EXISITNG CONDITIONS BUT RATHER TO SHOW THE GENERAL ARRANGEMENT AND LOCATION OF THE SYSTEMS. PERFORM FIELD SURVEY AS NECESSARY TO DETERMINE THE ROUTING AND LOCATION OF RACEWAYS AND EQUIPMENT. NOTIFY THE ENGINEER IN WRITING OF ANY DISCREPANCIES IN THE CONTRACT DRAWINGS OR SPECIAL PROVISIONS THAT WOULD PRECLUDE PERFORMANCE OF THE WORK AS SHOWN. NO CHANGE IN THE CONTRACT DRAWINGS DETAILS IS PERMISSIBLE WITHOUT THE CONSENT OF THE ENGINEER.

2. VERIFY BY FIELD MEASUREMENTS ALL DIMENSIONS, ELEVATIONS AND CONDITIONS THAT MAY BE REQUIRED TO LOCATE EQUIPMENT IN THE TENDER HOUSE. THE FIELD MEASUREMENTS SHALL BE PERFORMED PRIOR TO THE PREPARATION OF SHOP DRAWINGS AND THE MANUFACTURING, FABRICATION AND INSTALLATION OF ALL ITEMS OF CONSTRUCTION IN THE TENDER HOUSE. ALL VARIATIONS FROM THE CONTRACT DRAWING SHALL BE BROUGHT TO THE ATTENTION OF THE ENGINEER PRIOR TO THE PREPARATION OF SHOP DRAWINGS.

3. THESE PLANS ARE INCOMPLETE UNLESS ACCOMPANIED BY THE SPECIAL PROVISIONS AND ALL OTHER DOCUMENTS AS DEFINED WITHIN THE SPECIAL PROVISION.

4. THIS PROJECT IS TO BE CONSTRUCTED IN ACCORDANCE WITH ALL APPLICABLE STATE AND FEDERAL REGULATIONS AND CODES.

5. WHENEVER DISCREPANCIES ARE FOUND TO EXIST BETWEEN INFORMATION PROVIDED IN THE CONTRACT DOCUMENTS AND THE EXISTING PLANS OR EXISTING STRUCTURES, PROVIDE THE ENGINEER WITH A RECOMMENDATION FOR RESOLUTION OF THE INCONSISTENCY FOR REVIEW AND APPROVAL.

6. AREAS DISTURBED BY CONSTRUCTION OPERATIONS SHALL BE RESTORED TO A CONDITION EQUAL TO OR BETTER THAN THE EXISTING AT NO ADDITIONAL COST TO THE AGENCY.

7. ANY DAMAGE TO, INCLUDING BUT NOT LIMITED TO, ROADWAY, BASCULE SPANS, ANY SUPPORT STRUCTURES, APPROACH SPANS, UTILITIES (UNDERGROUND OR OVERHEAD) DUE TO THE CONSTRUCTION OPERATION WILL BE REPAIRED IMMEDIATELY TO THE SATISFACTION OF THE ENGINEER AND AT NO COST TO THE AGENCY.

8. ALL WARNING AND BARRIER GATES PLATFORM DESIGNS ARE BASED ON PRELIMINARY DESIGN LOADS FROM A GATE MANUFACTURER. FINAL LOADING WILL NOT BE AVAILABLE UNTIL FINAL DESIGN OF GATES IS COMPLETED BY THE GATE MANUFACTURER. AS PART OF THE SHOP DRAWING SUBMITTAL, THE CONTRACTOR SHALL SUBMIT TO THE ENGINEER FOR APPROVAL, COMPLETE CALCULATIONS AND DETAILS INCLUDING FOOTPRINT LOADS FOR THE DESIGN OF ANCHOR BOLTS FOR ALL GATES.

9. THE EXISTING DETAILS AND DIMENSIONS SHOWN ON THESE PLANS HAVE BEEN OBTAINED FROM RECORD DRAWINGS OF THE EXISTING STRUCTURE. THE CONTRACTOR SHALL VERIFY ALL DIMENSIONS WHICH GOVERN FIT AND LOCATION CALLED OUT FOR WITH RESPECT TO THE EXISTING STRUCTURE. THE CONTRACTOR SHALL PERFORM A FIELD SURVEY TO VERIFY ALL DIMENSIONS AFFECTING FABRICATION OR CONSTRUCTION. SHOP AND CONSTRUCTION DRAWINGS SHALL INDICATE FIELD VERIFIED DIMENSIONS. PAYMENT FOR COMPLETING THE FIELD SURVEY SHALL BE CONSIDERED SUBSIDIARY TO ITEM 529.15, REMOVAL OF STRUCTURE.

10. WHERE NEW FABRICATION FITS TO THE EXISTING STRUCTURE, ACTUAL FIELD MEASUREMENTS SHALL SUPERSEDE THOSE SHOWN IN THE PLANS AND SHALL BE IDENTIFIED ON THE SHOP DRAWINGS AS FIELD VERIFIED DIMENSIONS. ANY INTERFERENCE SHALL BE DOCUMENTED AND PRESENTED TO THE ENGINEER FOR RESOLUTION.

11. THE ENGINEER WILL NOT COMMENCE REVIEW OF THE CONTRACTOR'S SHOP DRAWINGS OR OTHER WORKING DRAWINGS UNTIL THE ENGINEER HAS COMPLETED HIS REVIEW AND APPROVED THE WRITTEN PLAN OF CONSTRUCTION.

12. THE CONTRACTOR SHALL SUBMIT SHOP DRAWINGS SHOWING THE METHODS OF INSTALLING ALL RIGGING EQUIPMENT. SHOP DRAWINGS SHALL SHOW INTENDED PATH OF MATERIAL/EQUIPMENT MOVEMENT AND DETAIL THE PROPOSED LOCATIONS OF SUPPORT OR HANGING OF LIFTING EQUIPMENT TO THE ENGINEER FOR REVIEW AND APPROVAL.

13. INSTALLATION AND DEMOLITION OF ELECTRICAL EQUIPMENT INCLUDING BUT NOT LIMITED TO INCOMING SERVICE, TRAFFIC CONTROL DEVICES AND THE STANDBY GENERATOR SHALL BE COORDINATED WITH THE INSTALLATION AND REMOVAL OF THE TEMPORARY BRIDGE.

14. TRAFFIC CONTROL SYSTEMS FOR BOTH MARINE AND ROADWAY TRAFFIC SHALL BE OPERATIONAL DURING ALL PHASES OF THE PROJECT.

PRELIMINARY PLANS

PROJECT NAME:	NORTH HERO GRAND ISLE BRIDGE
PROJECT NUMBER:	BHF 028-1(26)

FILE NAME: zl2bl42enotesl.dgn	PLOT DATE: 10/7/2016
PROJECT LEADER: T. FRENCH	DRAWN BY: R. DASILVA
DESIGNED BY: Y. ADELEKAN	CHECKED BY: K. HAJJEH
ELECTRICAL GENERAL NOTES	SHEET 91 OF 172

ABBREVIATIONS

A	AMBER
A, AMPS	AMPERE
AF	AMPS FRAME
AH	AIR HORN
AM	AMMETER
AS	AMBER TRAFFIC SIGNAL
AT	AMPS TRIP
ATS	AUTOMATIC TRANSFER SWITCH
BCP	BRIDGE CONTROL PERMISSIVE
BG	BARRIER GATE
BT	BUS TROUBLE
BPTS	TRAFFIC SIGNAL BYPASS
CB	CIRCUIT BREAKER
CKT	CIRCUIT
CP	CONTROL POWER
CR	CONTROL RELAY
CT	CURRENT TRANSFORMER
DS	DISCONNECT
E	EAST
EBG	EAST BARRIER GATE
EFWG	EAST OFF GOING WARNING GATE
EM	EAST MOTOR
ENWG	EAST ON COMING WARNING GATE
ESP	EAST SPAN LOCK
ESTOP	EMERGENCY STOP
EWG	EAST WARNING GONG
FCT	FLUID CRITICAL TEMPERATURE
FHT	FLUID HIGH TEMPERATURE
FLT	FLUID LOW TEMPERATURE
G	GREEN
GEN	GENERATOR
GFCI	GROUND FAULT CIRCUIT INTERRUPTER
HP	HEATING PANEL
HTR	HEATER
HZ	HERTZ
KW	KILOWATT
KWH	KILOWATT HOUR
L	LOWER
LP	LIGHTING PANEL
LT	LAMP TEST
M	MOTOR, MOTOR CONTACTOR
MA	MAIN BUS CURRENT
MCC	MOTOR CONTROL CENTER
MV	MAIN BUS VOLTAGE
OL	OVERLOAD
PFR	PHASE FAILURE RELAY
PH	PHASE
R	RED, RAISE
RS	RED TRAFFIC SIGNAL
SERV	SERVICE
SL	SPAN LOCK
SLD	SPAN LOCK DRIVEN
SLP	SPAN LOCK PULLED
SS	SELECTOR SWITCH
TAS	THERMOSTAT
TR	TRANSFORMER
TS	TRAFFIC SIGNAL
TRANS	TRANSDUCER
UTIL	UTILITY
V	VOLTAGE
VA	VOLT AMPERE
VAC	AC VOLTAGE
VM	VOLTMETER
W	WATT, WEST
WBG	WEST BARRIER GATE
WFWG	WEST OFF GOING WARNING GATE
WG	WARNING GATE
WGGR	WARNING GATE GROUP RAISE
WH	WATT-HOUR
WM	WEST MOTOR
WNWG	WEST ON COMING WARNING GATE
WSP	WEST SPAN LOCK

LEGEND

CIRCUIT BREAKER

DISCONNECT SWITCH

ATS

TRANSFORMER

CURRENT TRANSFORMER

NORMALLY CLOSED CONTACT

NORMALLY OPENED CONTACT

OVERLOAD

VOLTMETER

AMMETER

WATTMETER

MOTOR, 20 DENOTES HP RATING

MOTOR WITH BRAKE

RELAY COIL

CONTACTOR COIL

GROUND

FUSE

PRELIMINARY PLANS

PROJECT NAME:	NORTH HERO GRAND ISLE BRIDGE
PROJECT NUMBER:	BHF 028-1(26)

FILE NAME: z12b142elegend1.dgn	PLOT DATE: 10/7/2016
PROJECT LEADER: T. FRENCH	DRAWN BY: R. DASILVA
DESIGNED BY: Y. ADELEKAN	CHECKED BY: K. HAJJEH
ELECTRICAL LEGEND AND ABBREVIATIONS	SHEET 92 OF 172

NOTES

1. FOR LEGEND, ABBREVIATIONS, AND GENERAL NOTES, SEE SHEET NO. 91 AND 92.

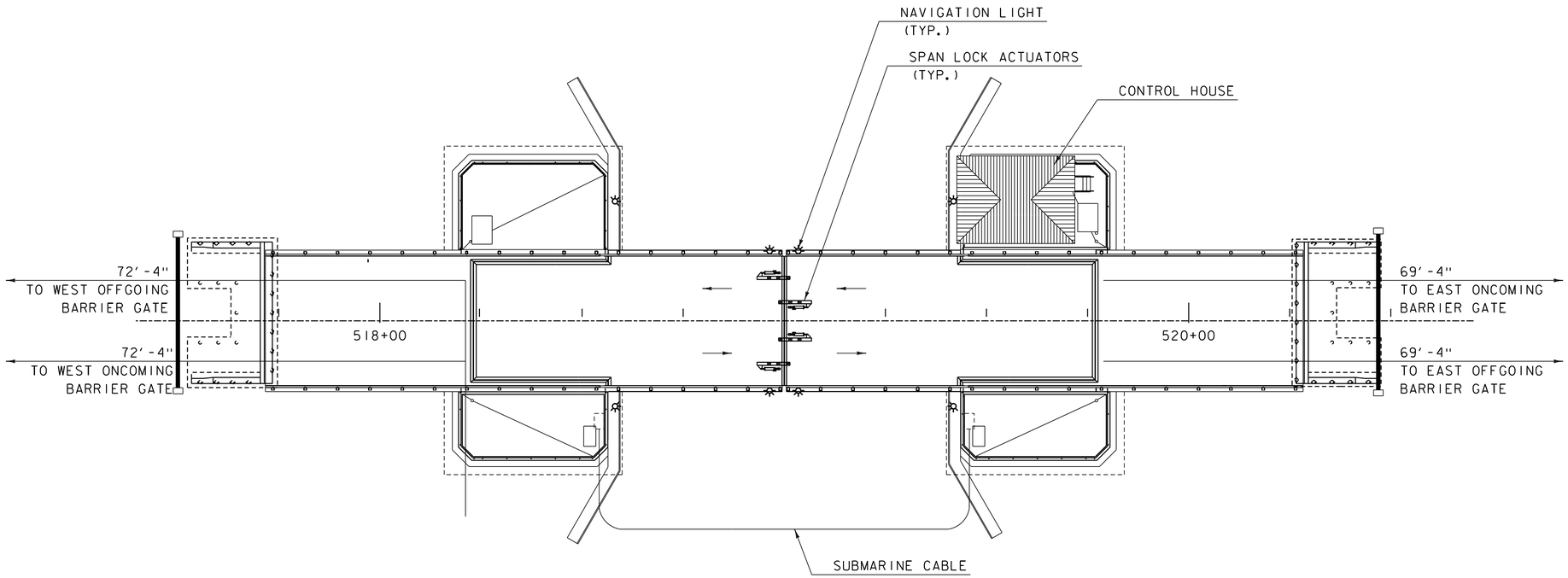

ELECTRICAL PLAN

SCALE 1/16" = 1'-0"

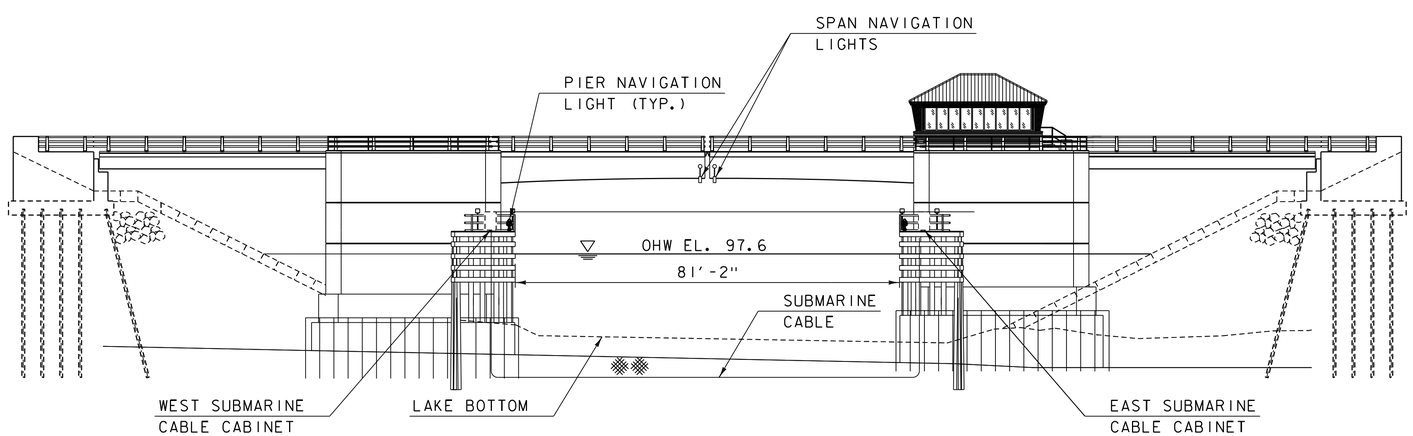

ELECTRICAL ELEVATION

SCALE 1/16" = 1'-0"

PRELIMINARY PLANS

PROJECT NAME: NORTH HERO GRAND ISLE BRIDGE	
PROJECT NUMBER: BHF 028-1(26)	
FILE NAME: z12br142elecpe.dgn	PLOT DATE: 10/7/2016
PROJECT LEADER: T. FRENCH	DRAWN BY: R. DA SILVA
DESIGNED BY: Y. ADELEKAN	CHECKED BY: K. HAJJEH
ELECTRICAL PLAN & ELEVATION	SHEET 93 OF 172

NOTES

1. FOR LEGEND, ABBREVIATIONS, AND GENERAL NOTES, SEE SHEET NO. 91 AND 92.
2. LOCATE THE NEW DRAWBRIDGE AHEAD SIGN IN THE SAME LOCATION AS EXISITNG. THE NEW DRAWBRIDGE AHEAD SIGN SHALL UTILIZE THE EXISTING UTILTY TRANSFORMERS.
3. INSTALLATION OF THE TRAFFIC SIGNALS AND GATES SHALL BE COORDINATED WITH THE INSTALLATION AND DEMOLITION OF THE TEMPORARY BRIDGE.

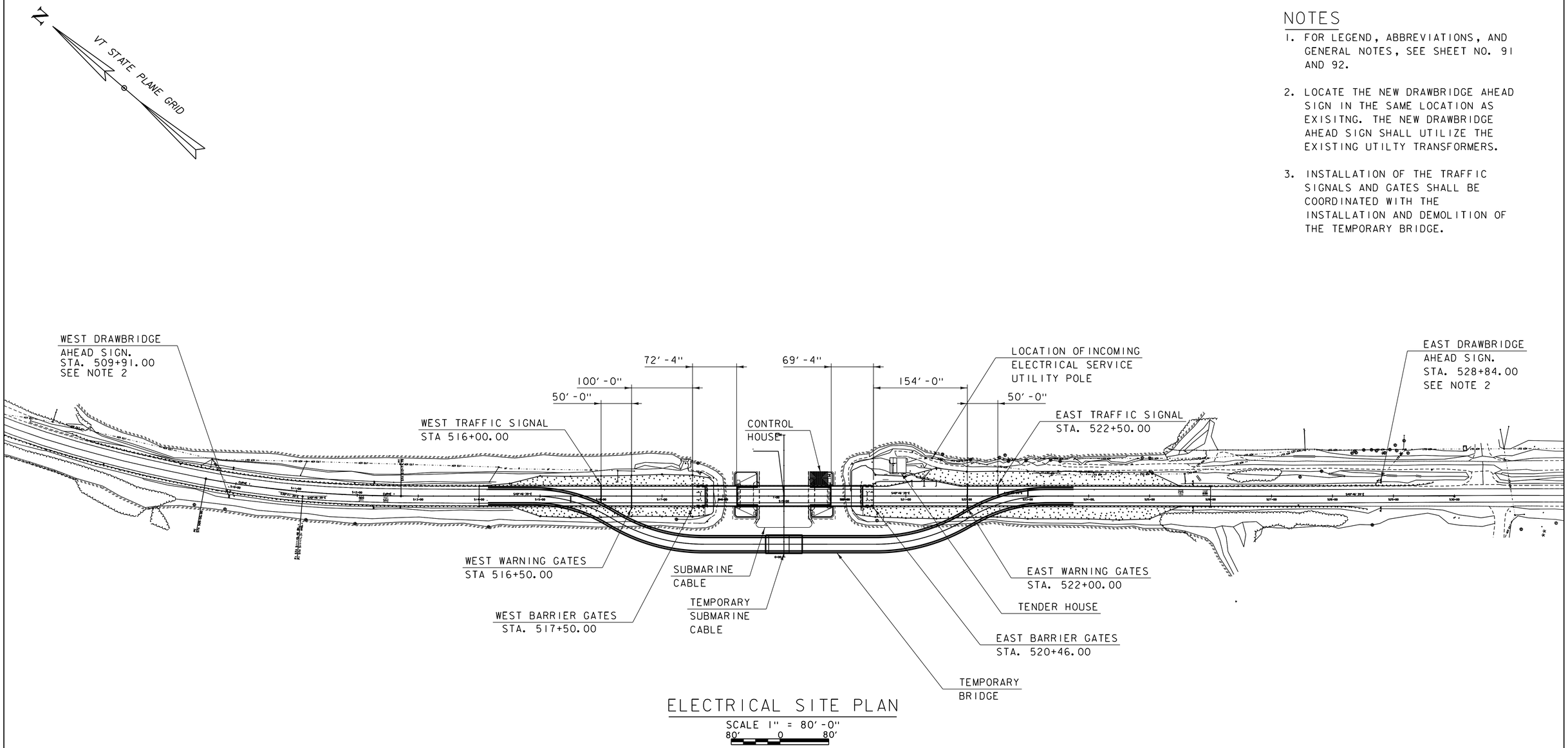

ELECTRICAL SITE PLAN

SCALE 1" = 80'-0"
80' 0 80'

PRELIMINARY PLANS

PROJECT NAME: NORTH HERO GRAND ISLE BRIDGE	
PROJECT NUMBER: BHF 028-1(26)	
FILE NAME: zi2bl42elecsite.dgn	PLOT DATE: 10/7/2016
PROJECT LEADER: T. FRENCH	DRAWN BY: R. DA SILVA
DESIGNED BY: Y. ADELEKAN	CHECKED BY: K. HAJJEH
ELECTRICAL SITE PLAN	SHEET 94 OF 172

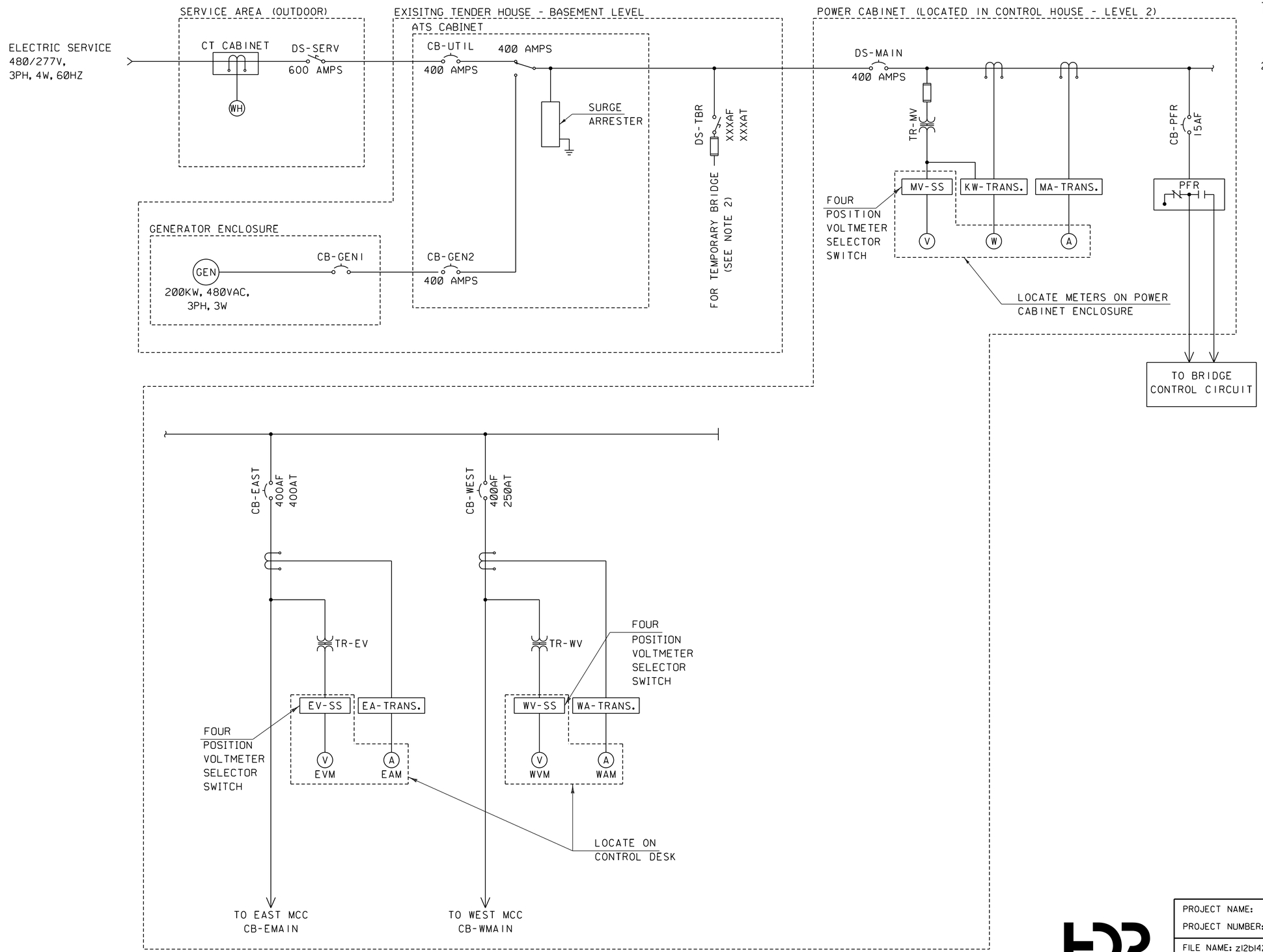

NOTES

1. FOR LEGEND, ABBREVIATIONS, AND GENERAL NOTES, SEE SHEET NO. 91 AND 92.
2. PROVIDE FUSED DISCONNECT SWITCH FOR TEMPORARY BRIDGE POWER. CONTRACTOR SHALL SIZE, FURNISH AND INSTALL WIRING AND CONDUITS FROM THE FUSED DISCONNECT SWITCH TO THE TEMPORAY BRIDGE

PRELIMINARY PLANS

PROJECT NAME:	NORTH HERO GRAND ISLE BRIDGE
PROJECT NUMBER:	BHF 028-1(26)

FILE NAME: z12b142onelinel.dgn	PLOT DATE: 10/7/2016
PROJECT LEADER: T. FRENCH	DRAWN BY: R. DA SILVA
DESIGNED BY: Y. ADELEKAN	CHECKED BY: K. HAJJEH
ONE LINE DIAGRAM 1 OF 2	SHEET 95 OF 172

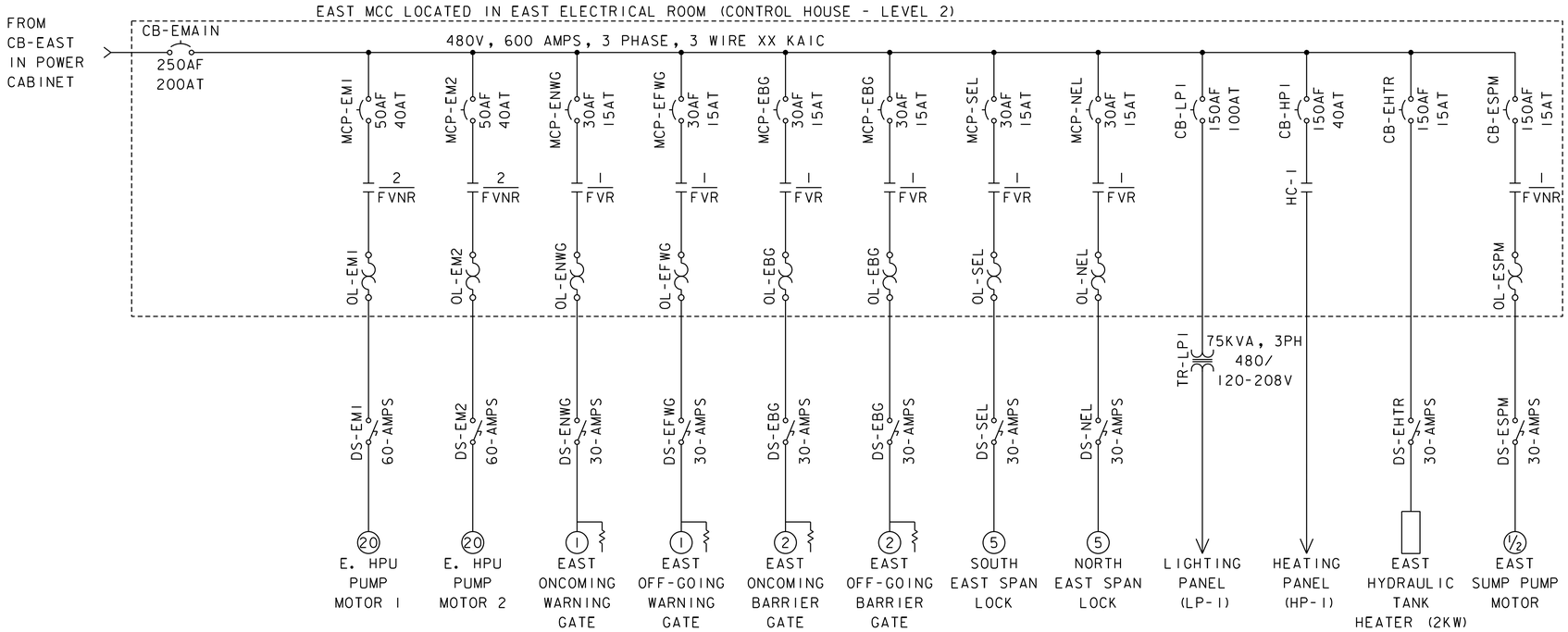

NOTES

1. FOR LEGEND, ABBREVIATIONS, AND GENERAL NOTES, SEE SHEET NO. 91 AND 92.

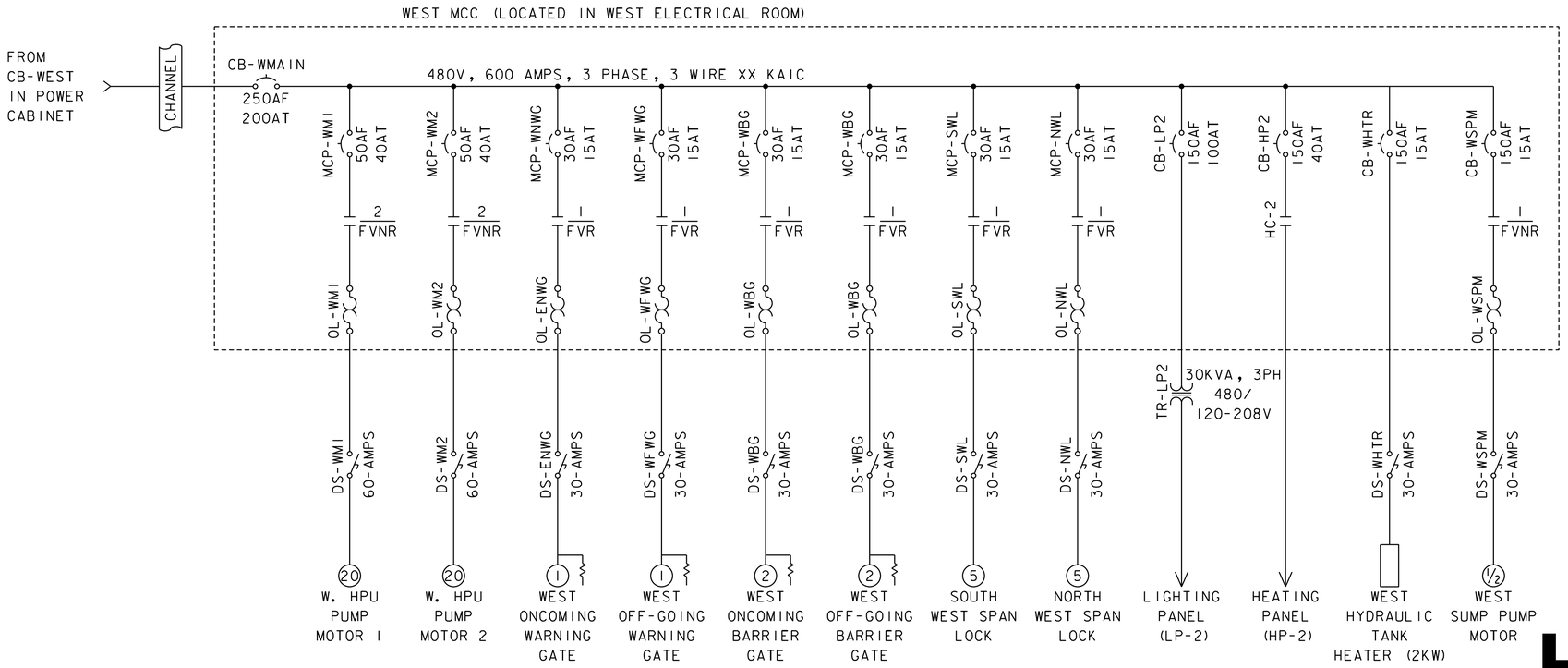

PRELIMINARY PLANS

PROJECT NAME: NORTH HERO GRAND ISLE BRIDGE	
PROJECT NUMBER: BHF 028-1(26)	
FILE NAME: zl2bl42oneline2.dgn	PLOT DATE: 10/7/2016
PROJECT LEADER: T. FRENCH	DRAWN BY: R. DA SILVA
DESIGNED BY: Y. ADELEKAN	CHECKED BY: K. HAJJEH
ONE LINE DIAGRAM 2 OF 2	SHEET 96 OF 172

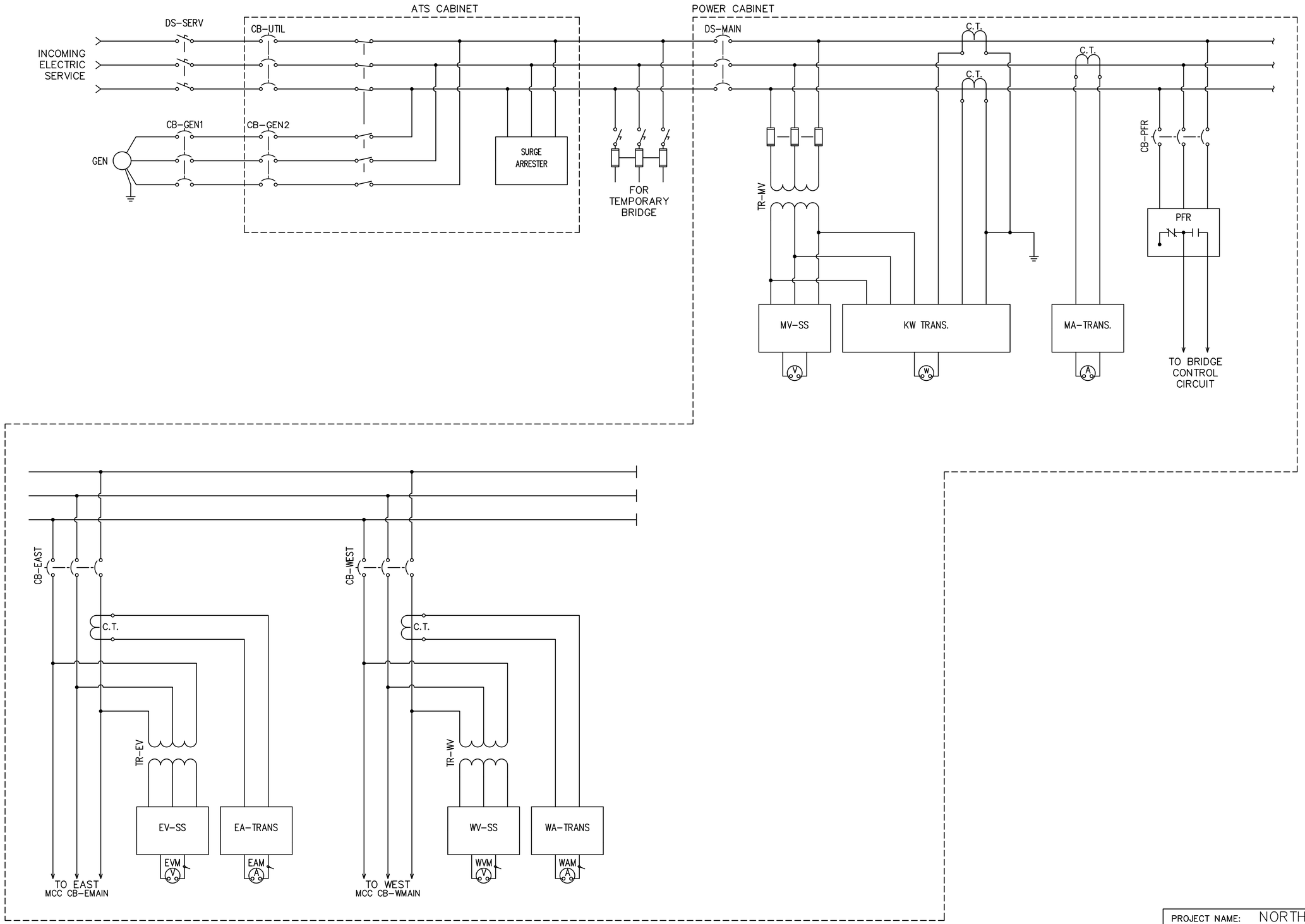

THREE LINE DIAGRAM

PRELIMINARY PLANS

PROJECT NAME: NORTH HERO GRAND ISLE BRIDGE
PROJECT NUMBER: BHF 028-1(26)

FILE NAME: z12b142cntrls01.dwg
PROJECT LEADER: T. FRENCH
DESIGNED BY: Y. ADELEKAN
CONTROL SCHEMATIC 1

PLOT DATE: 10/7/2016
DRAWN BY: R. DA SILVA
CHECKED BY: K. HAJJEH
SHEET 97 OF 172

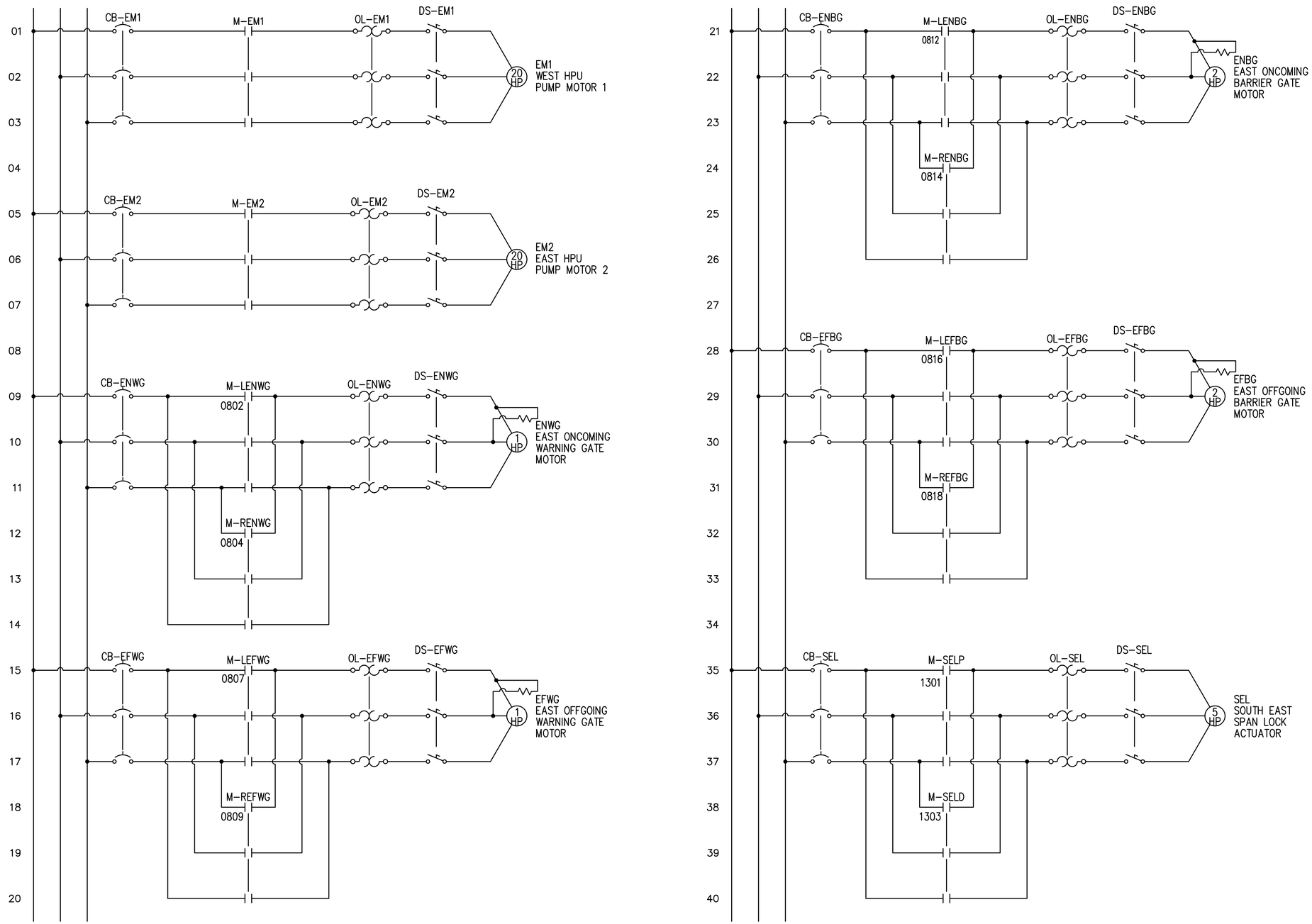

PRELIMINARY PLANS

EAST MCC THREE LINE DIAGRAM 1 OF 2

HDR

PROJECT NAME: NORTH HERO GRAND ISLE BRIDGE	
PROJECT NUMBER: BHF 028-1(26)	
FILE NAME: z12b142cntrls02.dwg	PLOT DATE: 10/7/2016
PROJECT LEADER: T. FRENCH	DRAWN BY: R. DA SILVA
DESIGNED BY: Y. ADELEKAN	CHECKED BY: K. HAJJEH
CONTROL SCHEMATIC 2	SHEET 98 OF 172

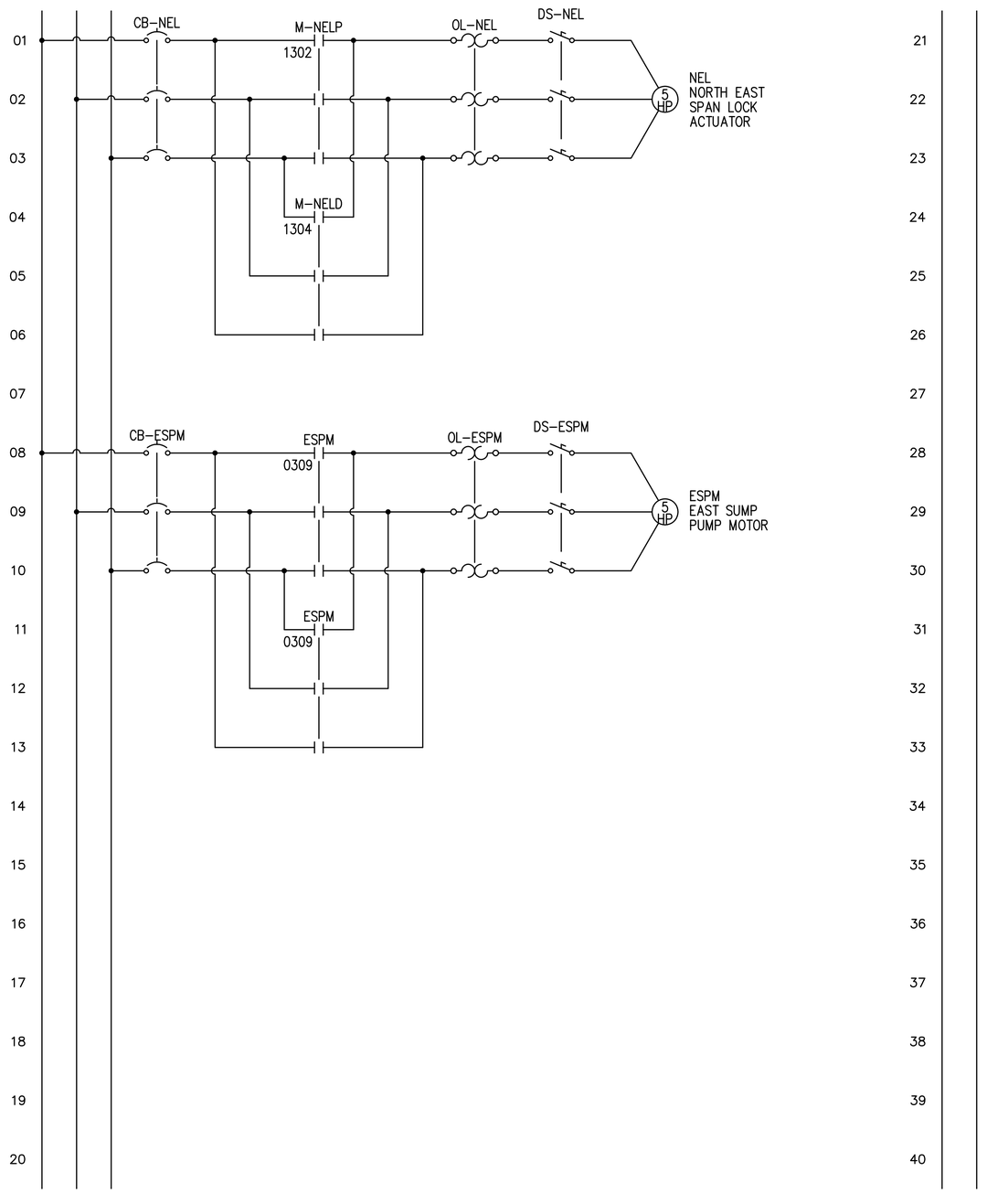

EAST MCC THREE LINE DIAGRAM 2 OF 2

PRELIMINARY PLANS

PROJECT NAME: NORTH HERO GRAND ISLE BRIDGE
PROJECT NUMBER: BHF 028-1(26)

FILE NAME: z12b142cntrls03.dwg
PROJECT LEADER: T. FRENCH
DESIGNED BY: Y. ADELEKAN
CONTROL SCHEMATIC 3

PLOT DATE: 10/7/2016
DRAWN BY: R. DA SILVA
CHECKED BY: K. HAJJEH
SHEET 99 OF 172

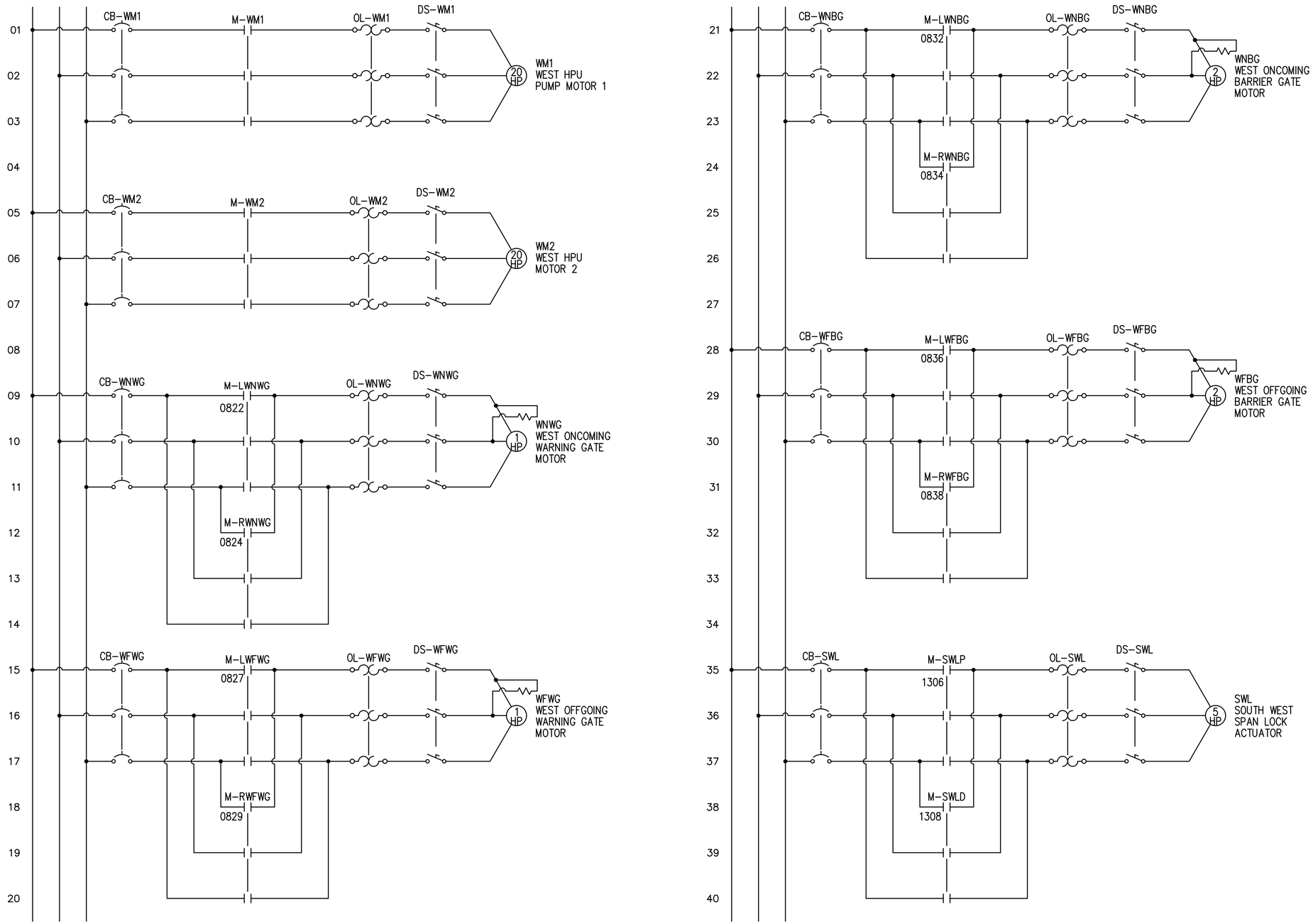

PRELIMINARY PLANS

WEST MCC THREE LINE DIAGRAM 1 OF 2

PROJECT NAME: NORTH HERO GRAND ISLE BRIDGE	
PROJECT NUMBER: BHF 028-1(26)	
FILE NAME: z12b142cntrls04.dwg	PLOT DATE: 10/7/2016
PROJECT LEADER: T. FRENCH	DRAWN BY: R. DA SILVA
DESIGNED BY: Y. ADELEKAN	CHECKED BY: K. HAJJEH
CONTROL SCHEMATIC 4	SHEET 100 OF 172

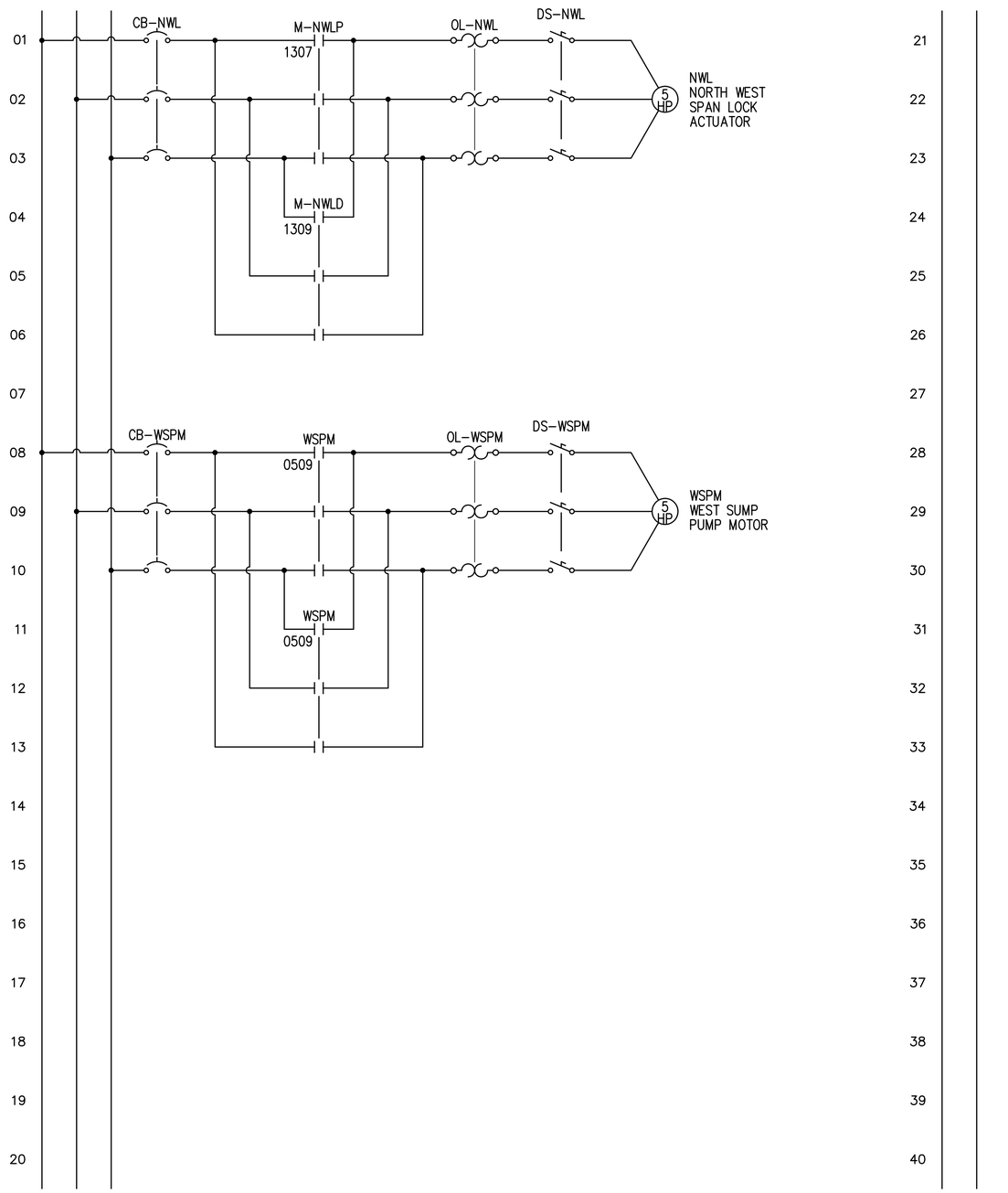

WEST MCC THREE LINE DIAGRAM 2 OF 2

PRELIMINARY PLANS

PROJECT NAME: NORTH HERO GRAND ISLE BRIDGE
PROJECT NUMBER: BHF 028-1(26)

FILE NAME: z12b142cntrls05.dwg
PROJECT LEADER: T. FRENCH
DESIGNED BY: Y. ADELEKAN
CONTROL SCHEMATIC 5

PLOT DATE: 10/7/2016
DRAWN BY: R. DA SILVA
CHECKED BY: K. HAJJEH
SHEET 101 OF 172

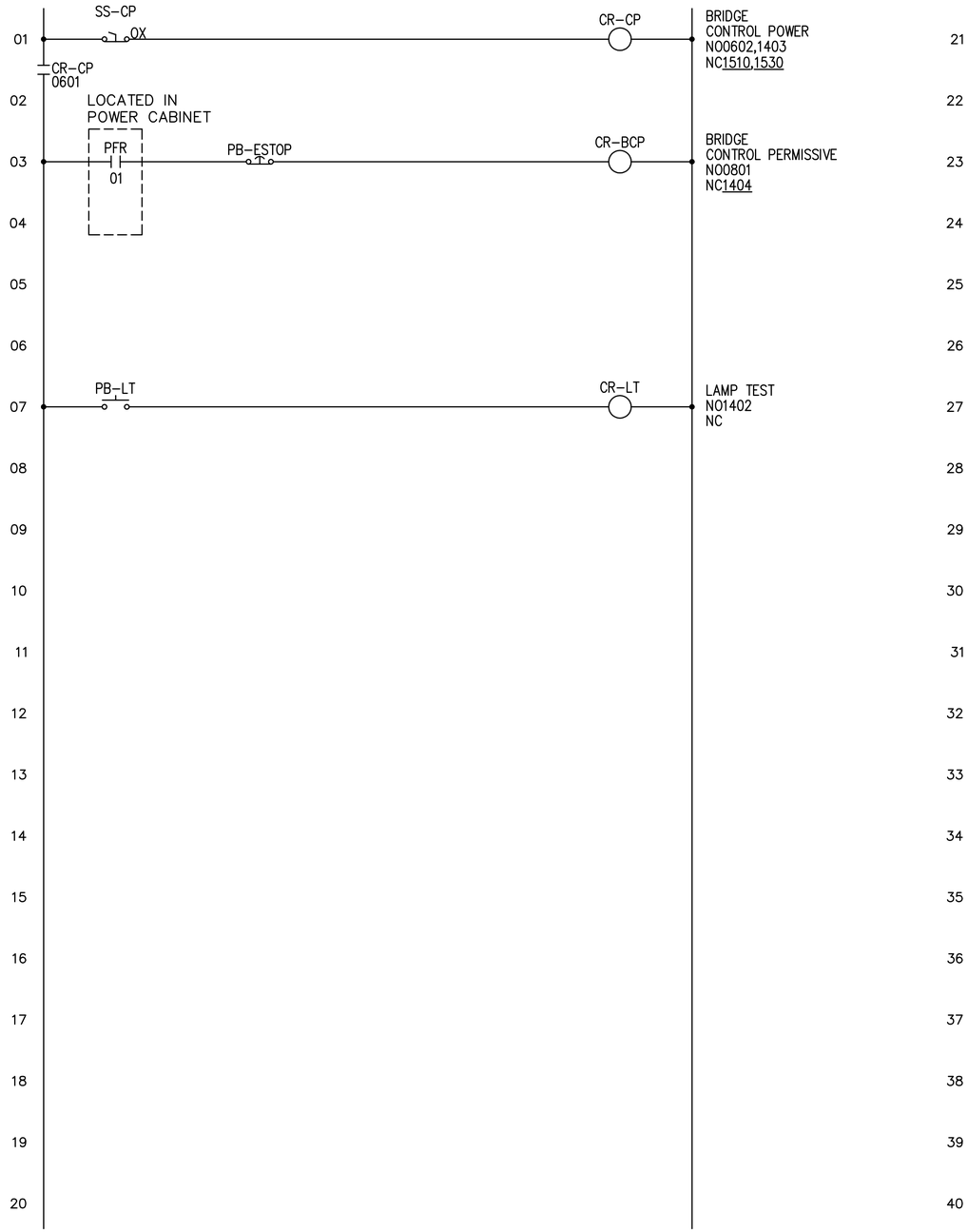

PRELIMINARY PLANS

BRIDGE CONTROL PERMISSIVE

PROJECT NAME: NORTH HERO GRAND ISLE BRIDGE	
PROJECT NUMBER: BHF 028-1(26)	
FILE NAME: z12b142cntrls06.dwg	PLOT DATE: 10/7/2016
PROJECT LEADER: T. FRENCH	DRAWN BY: R. DA SILVA
DESIGNED BY: Y. ADELEKAN	CHECKED BY: K. HAJJEH
CONTROL SCHEMATIC 6	SHEET 102 OF 172

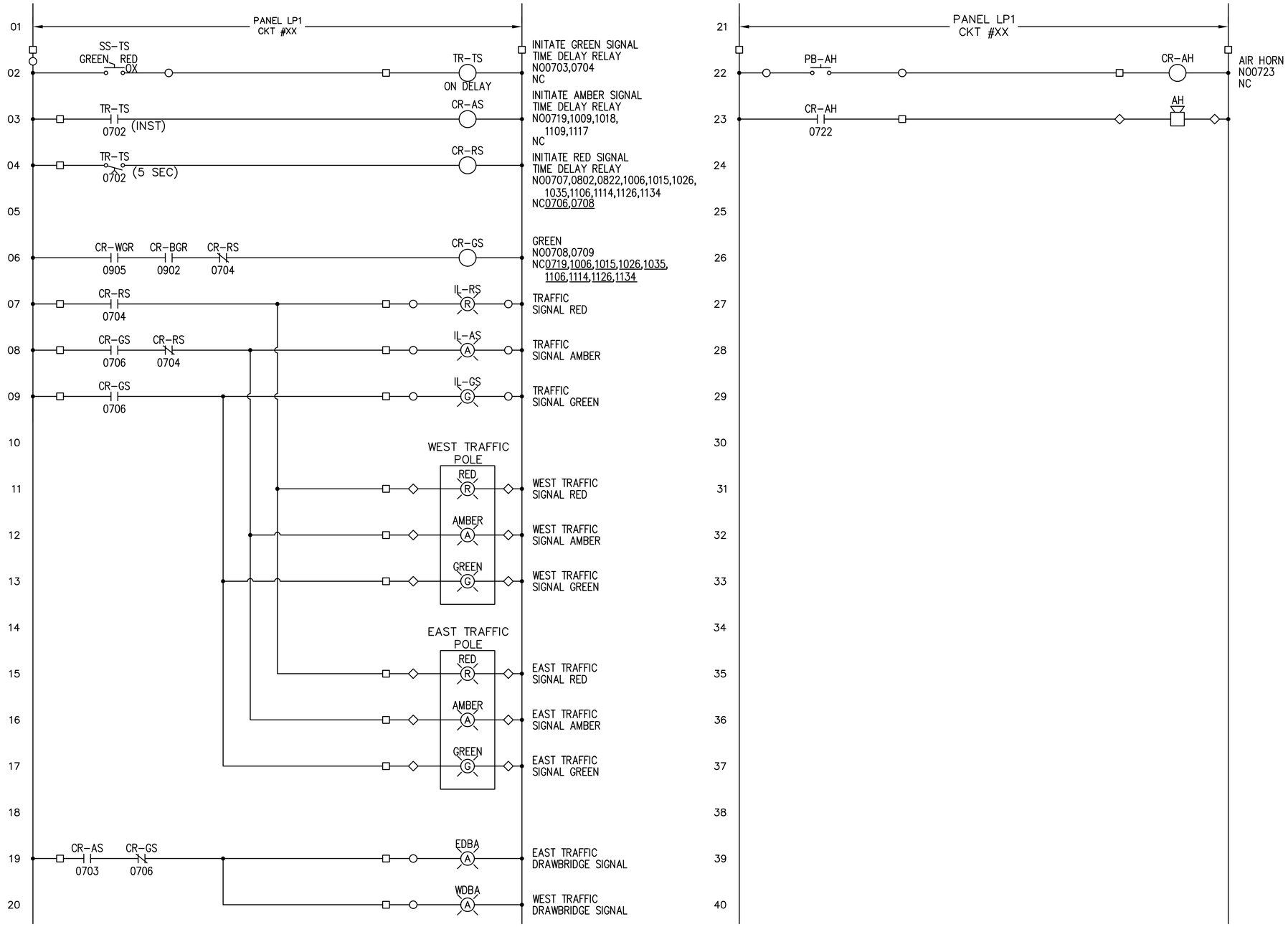

TRAFFIC CONTROL

AIR HORN

PRELIMINARY PLANS

PROJECT NAME: NORTH HERO GRAND ISLE BRIDGE
PROJECT NUMBER: BHF 028-1(26)

FILE NAME: z12b142cntrls07.dwg
PROJECT LEADER: T. FRENCH
DESIGNED BY: Y. ADELEKAN
CONTROL SCHEMATIC 7

PLOT DATE: 10/7/2016
DRAWN BY: R. DA SILVA
CHECKED BY: K. HAJJEH
SHEET 103 OF 172

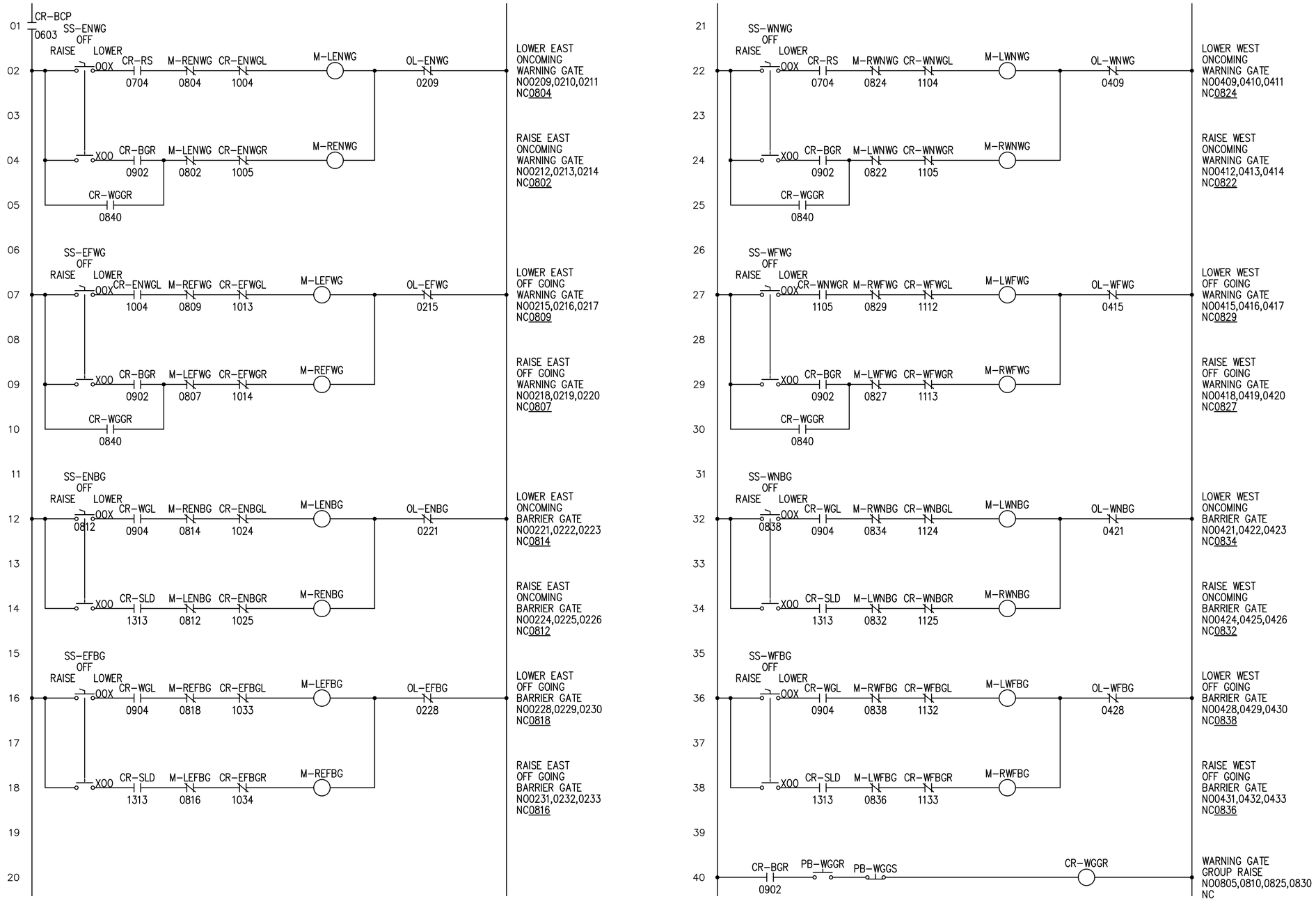

GATE CONTROLS 1 OF 5

PRELIMINARY PLANS

PROJECT NAME: NORTH HERO GRAND ISLE BRIDGE
PROJECT NUMBER: BHF 028-1(26)

FILE NAME: z12b142cntrls08.dwg
PROJECT LEADER: T. FRENCH
DESIGNED BY: Y. ADELEKAN
CONTROL SCHEMATIC 8

PLOT DATE: 10/7/2016
DRAWN BY: R. DA SILVA
CHECKED BY: K. HAJJEH
SHEET 104 OF 172

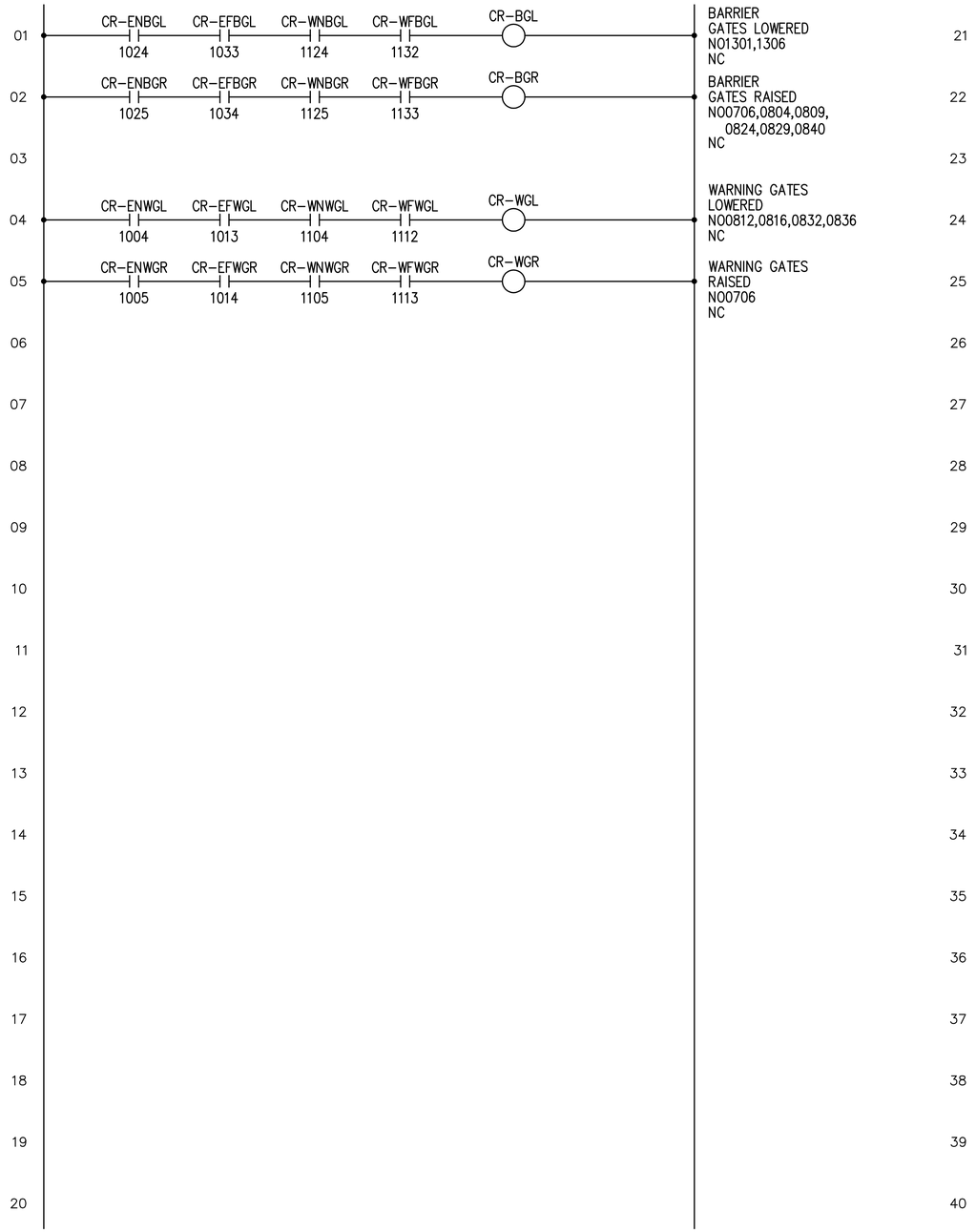

GATE CONTROLS 2 OF 5

PRELIMINARY PLANS

PROJECT NAME: NORTH HERO GRAND ISLE BRIDGE
PROJECT NUMBER: BHF 028-1(26)

FILE NAME: z12b142cntrls09.dwg
PROJECT LEADER: T. FRENCH
DESIGNED BY: Y. ADELEKAN
CONTROL SCHEMATIC 9

PLOT DATE: 10/7/2016
DRAWN BY: R. DA SILVA
CHECKED BY: K. HAJJEH
SHEET 105 OF 172

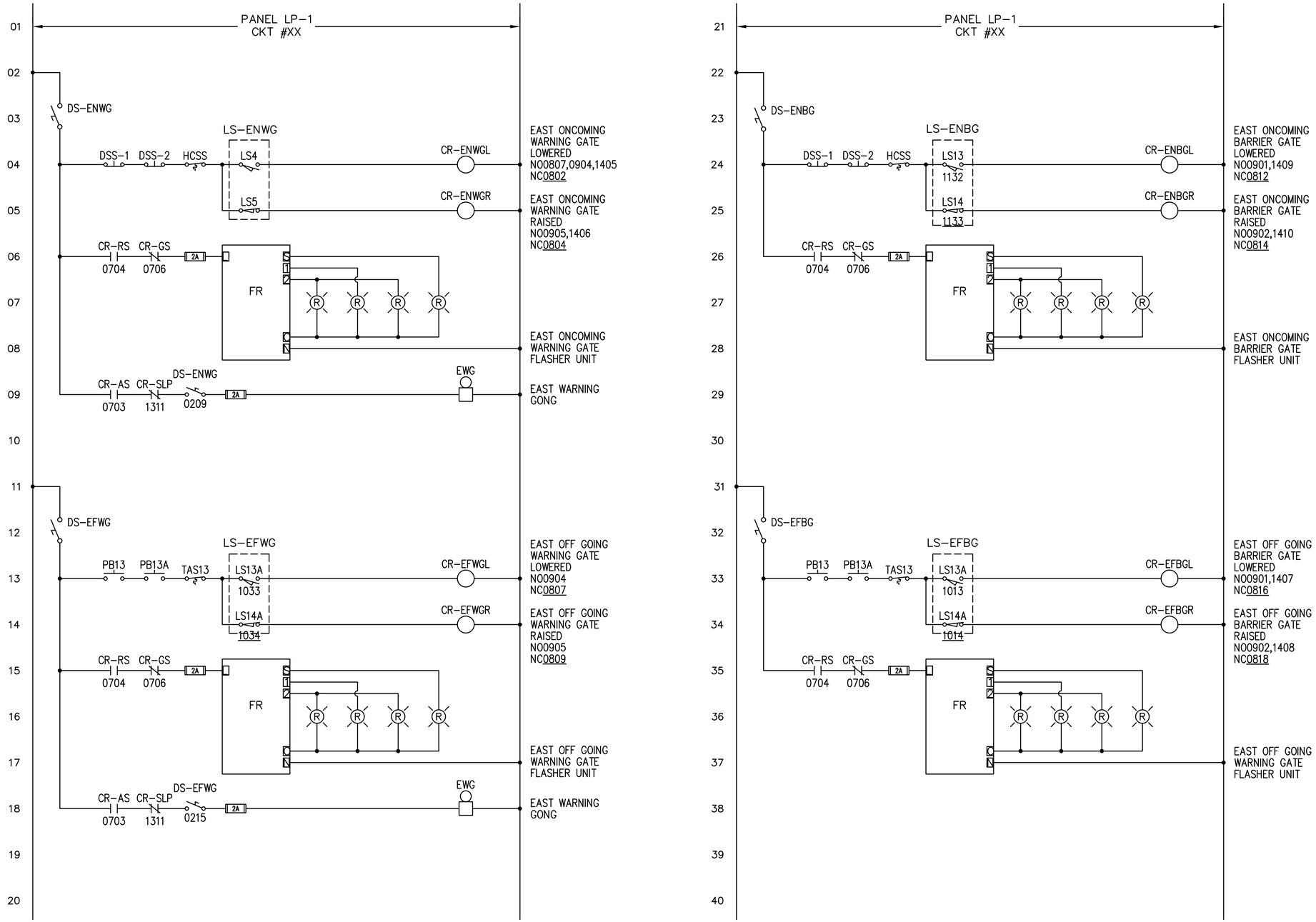

GATE CONTROLS 3 OF 5

PRELIMINARY PLANS

PROJECT NAME: NORTH HERO GRAND ISLE BRIDGE	
PROJECT NUMBER: BHF 028-1(26)	
FILE NAME: z12b142cntrls10.dwg	PLOT DATE: 10/7/2016
PROJECT LEADER: T. FRENCH	DRAWN BY: R. DA SILVA
DESIGNED BY: Y. ADELEKAN	CHECKED BY: K. HAJJEH
CONTROL SCHEMATIC 10	SHEET 106 OF 172

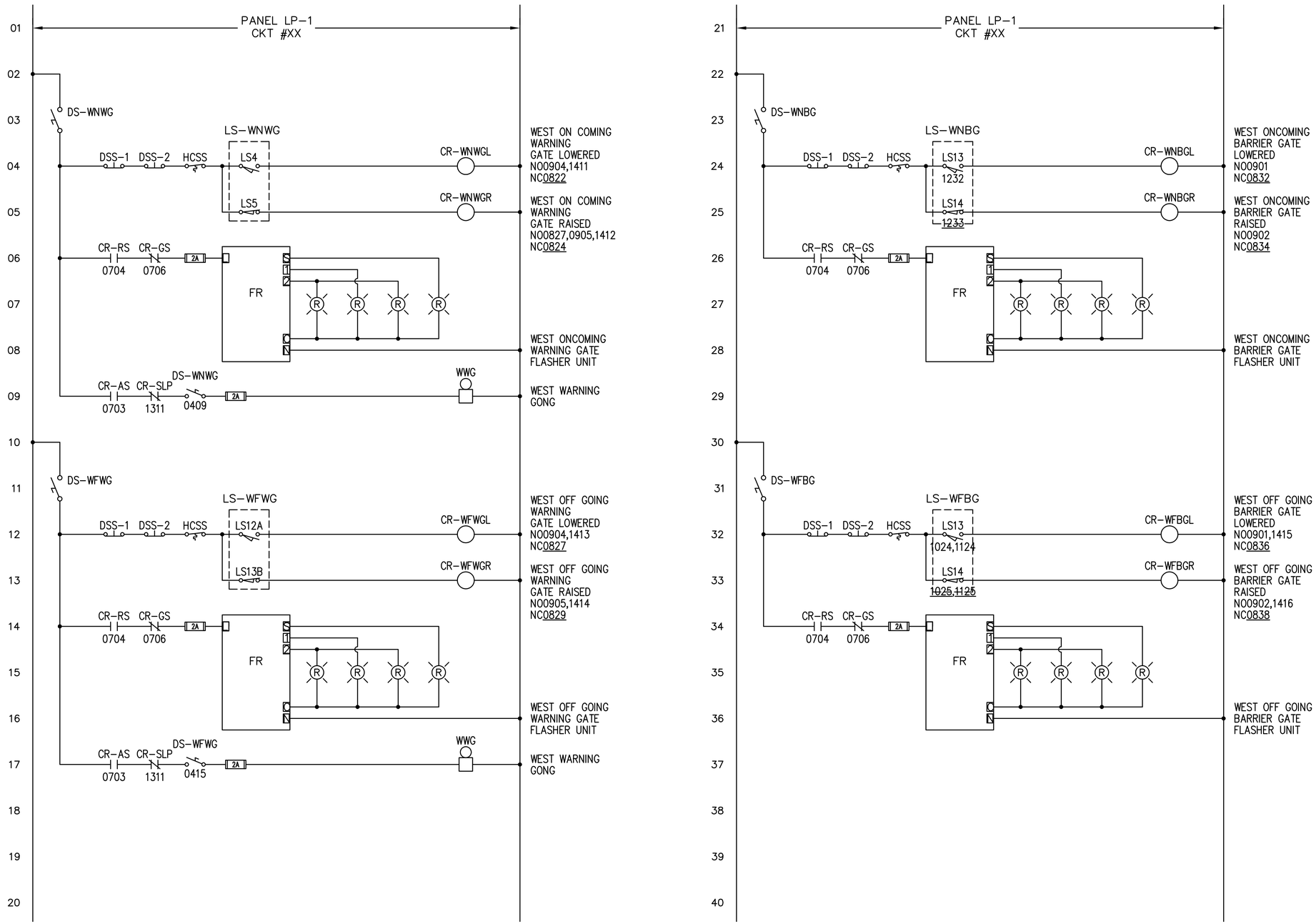

GATE CONTROLS 4 OF 5

PRELIMINARY PLANS

PROJECT NAME: NORTH HERO GRAND ISLE BRIDGE	
PROJECT NUMBER: BHF 028-1(26)	
FILE NAME: z12b142cntrls11.dwg	PLOT DATE: 10/7/2016
PROJECT LEADER: T. FRENCH	DRAWN BY: R. DA SILVA
DESIGNED BY: Y. ADELEKAN	CHECKED BY: K. HAJJEH
CONTROL SCHEMATIC 11	SHEET 107 OF 172

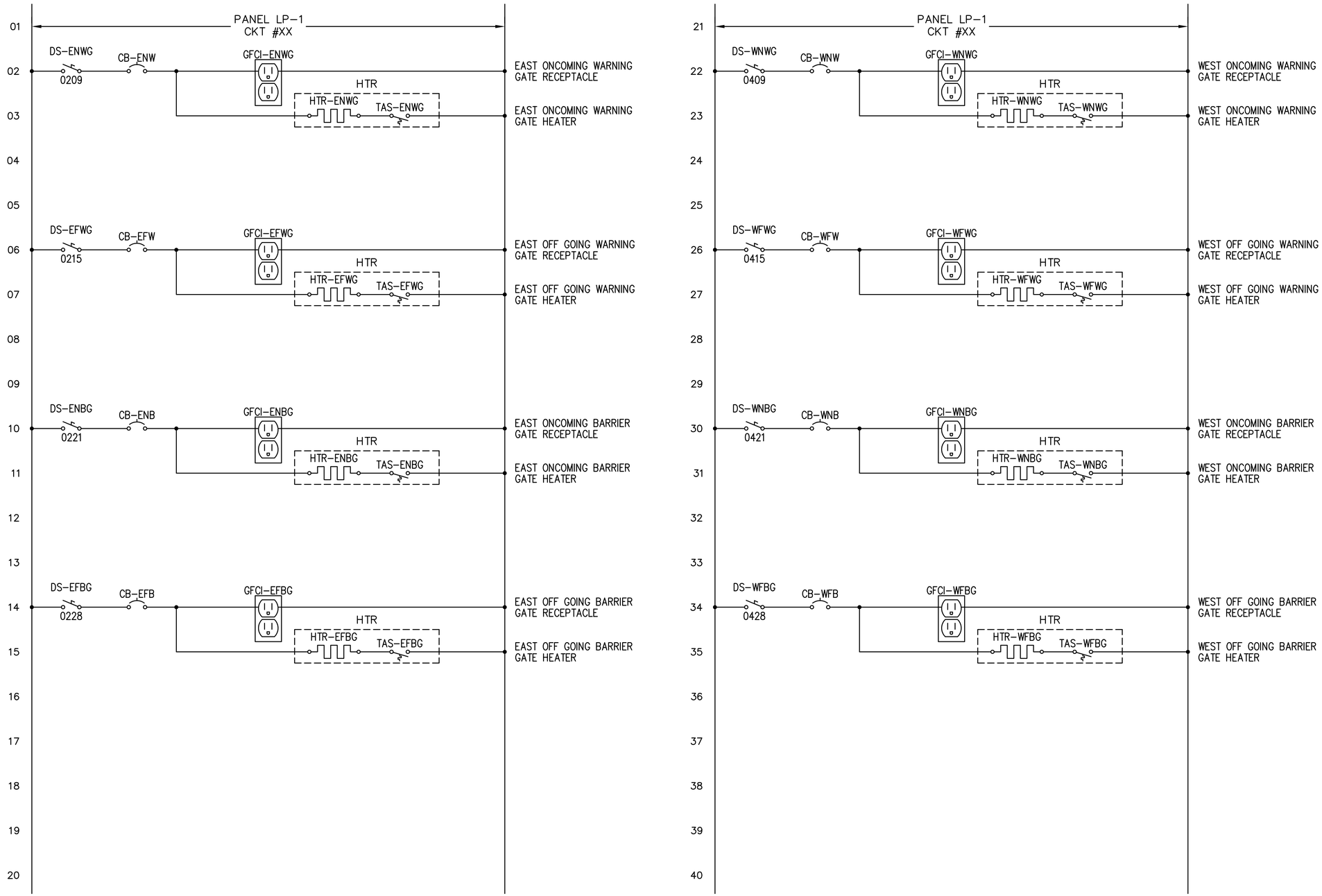

GATE CONTROLS 5 OF 5

PRELIMINARY PLANS

PROJECT NAME: NORTH HERO GRAND ISLE BRIDGE	
PROJECT NUMBER: BHF 028-1(26)	
FILE NAME: z12b142cntrls12.dwg	PLOT DATE: 10/7/2016
PROJECT LEADER: T. FRENCH	DRAWN BY: R. DA SILVA
DESIGNED BY: Y. ADELEKAN	CHECKED BY: K. HAJJEH
CONTROL SCHEMATIC 12	SHEET 108 OF 172

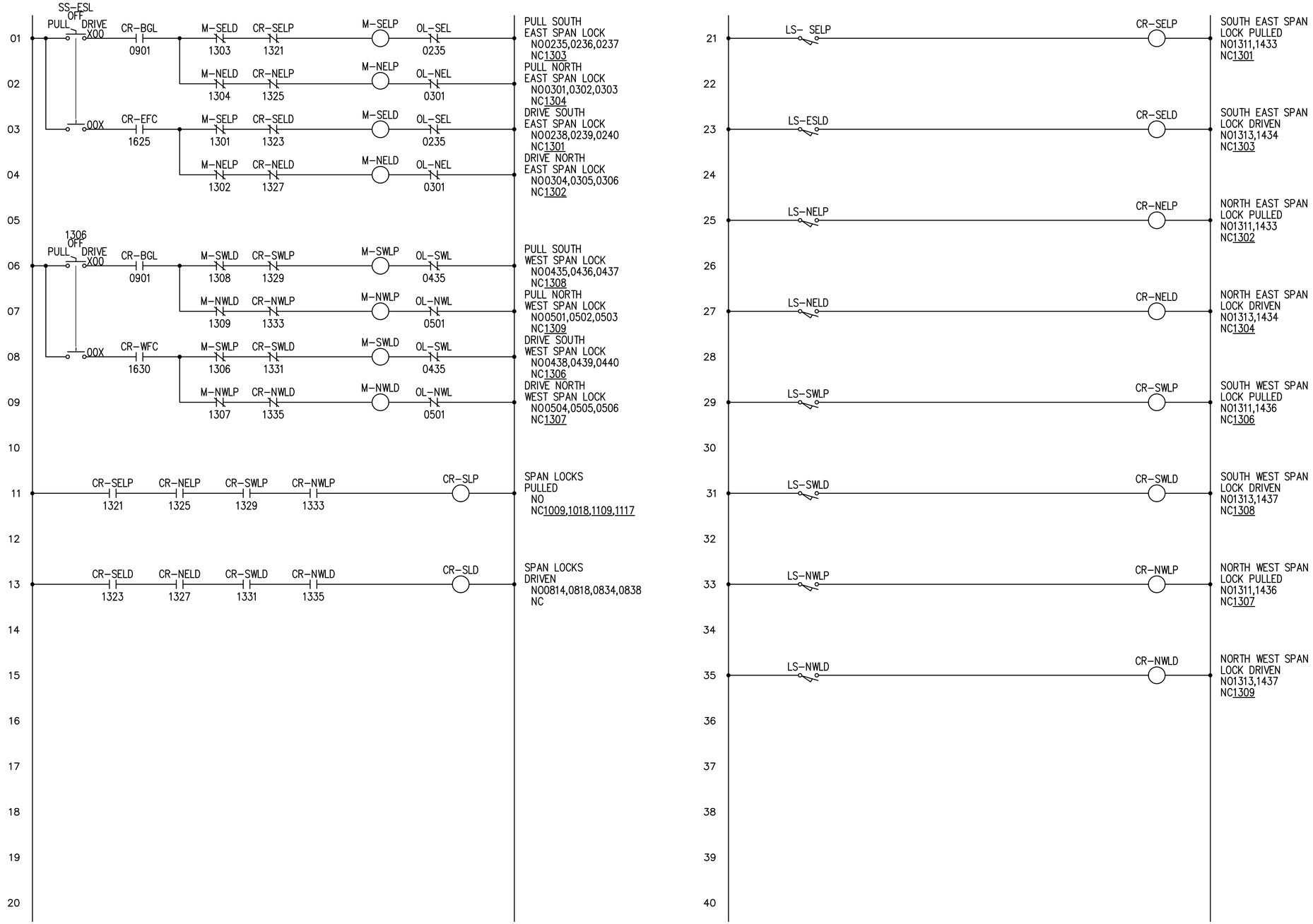

SPAN LOCK CONTROLS

PRELIMINARY PLANS

PROJECT NAME: NORTH HERO GRAND ISLE BRIDGE	
PROJECT NUMBER: BHF 028-1(26)	
FILE NAME: z12b142cntrls13.dwg	PLOT DATE: 10/7/2016
PROJECT LEADER: T. FRENCH	DRAWN BY: R. DA SILVA
DESIGNED BY: Y. ADELEKAN	CHECKED BY: K. HAJJEH
CONTROL SCHEMATIC 13	SHEET 109 OF 172

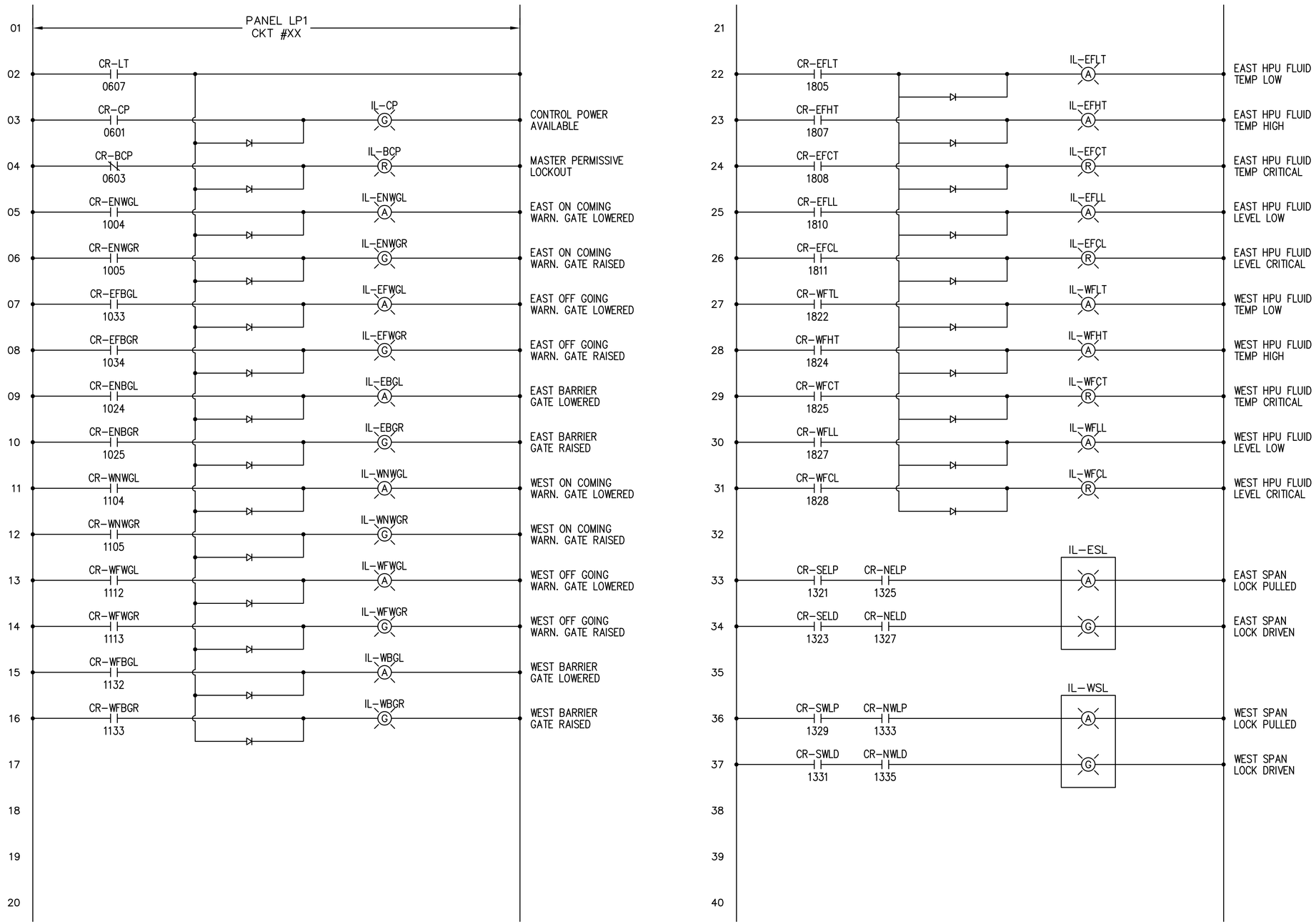

INDICATOR LIGHTS

PRELIMINARY PLANS

PROJECT NAME: NORTH HERO GRAND ISLE BRIDGE	
PROJECT NUMBER: BHF 028-1(26)	
FILE NAME: z12b142cntrls14.dwg	PLOT DATE: 10/7/2016
PROJECT LEADER: T. FRENCH	DRAWN BY: R. DA SILVA
DESIGNED BY: Y. ADELEKAN	CHECKED BY: K. HAJJEH
CONTROL SCHEMATIC 14	SHEET 110 OF 172

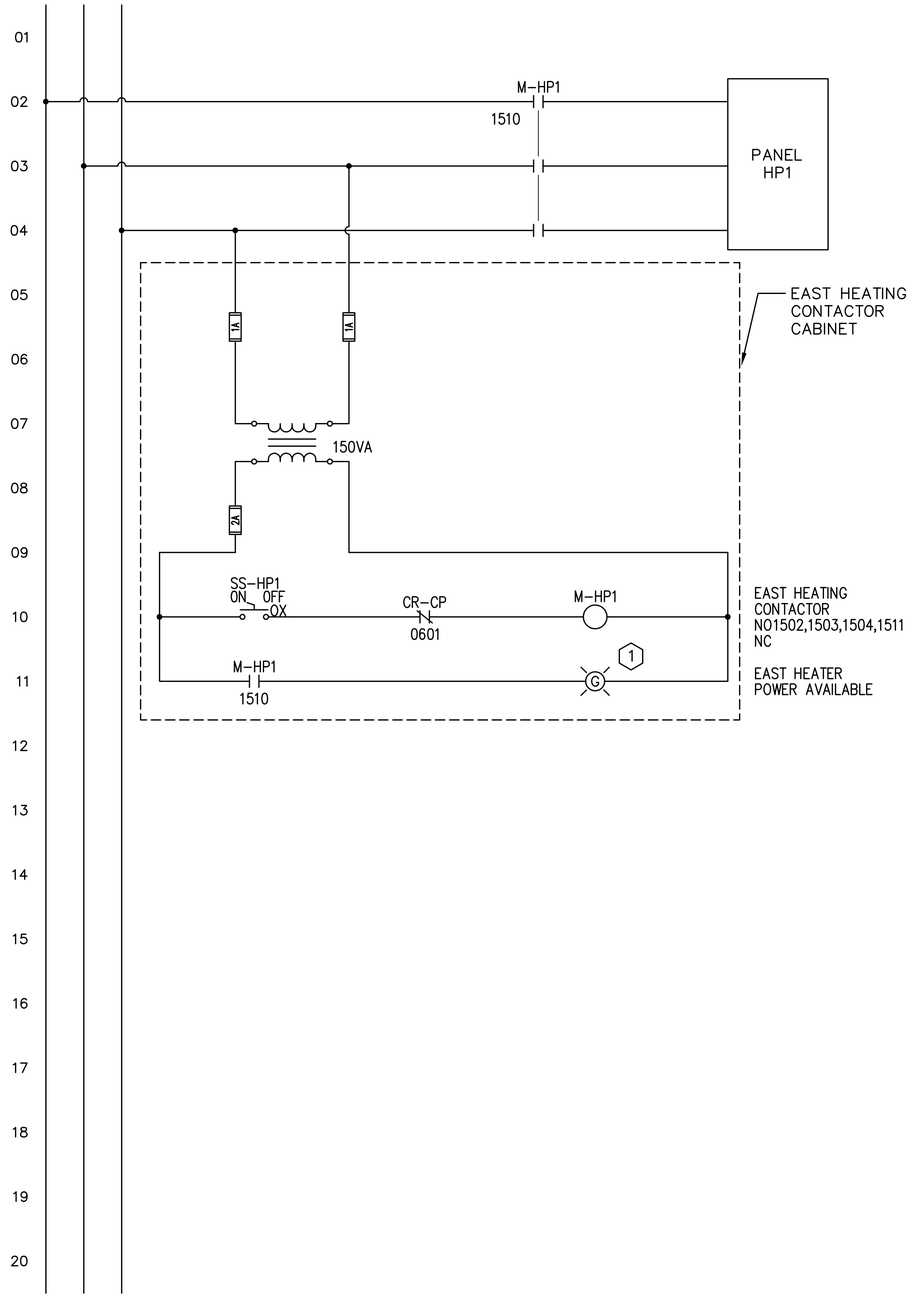

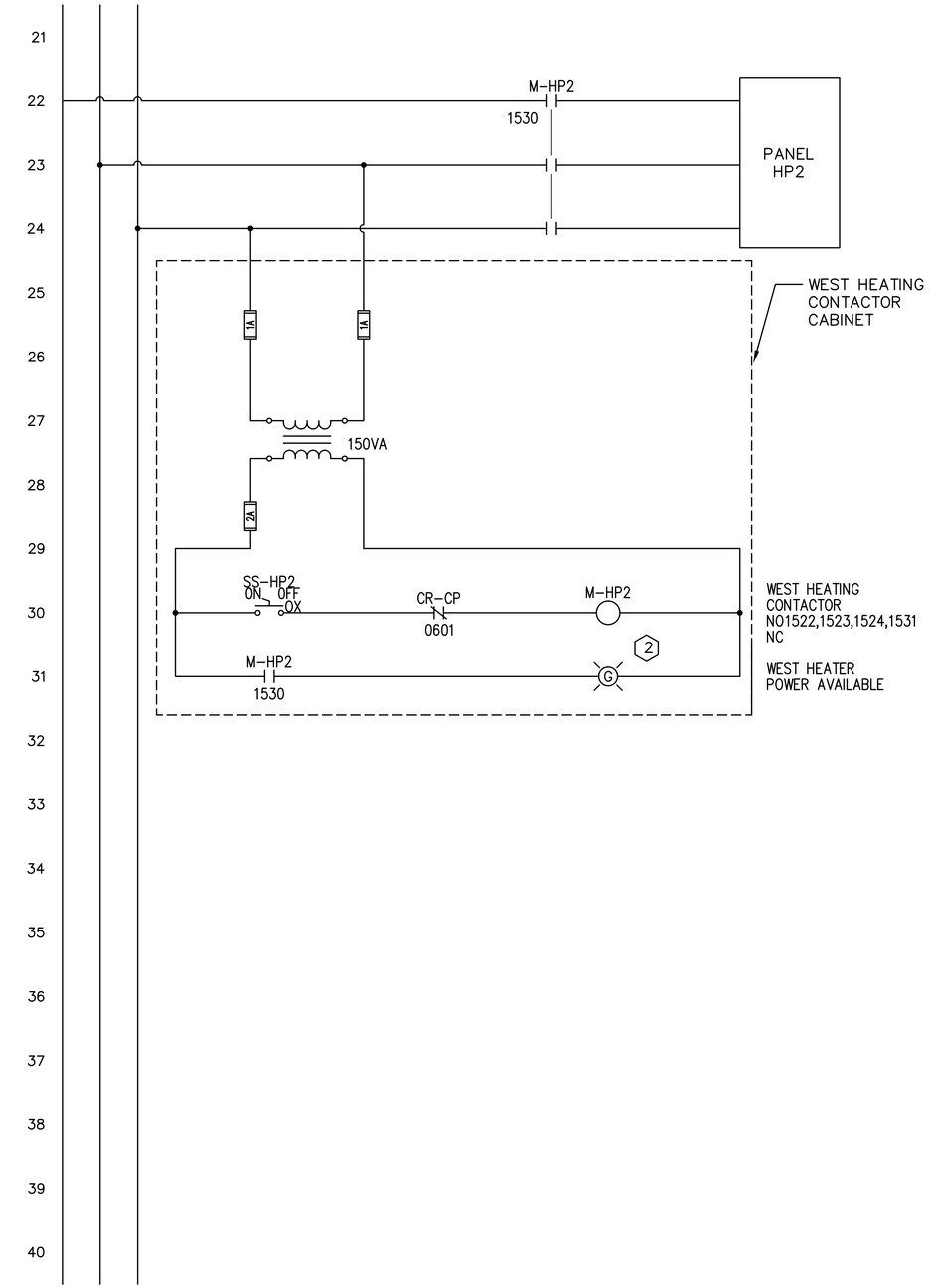

1 MOUNT SELECTOR SWITCH AND INDICATOR LIGHT ON EAST HEATING CONTACTOR TERMINATION CABINET

2 MOUNT SELECTOR SWITCH AND INDICATOR LIGHT ON WEST HEATING CONTACTOR TERMINATION CABINET

PRELIMINARY PLANS

HEATER CONTROLS

HDR

PROJECT NAME: NORTH HERO GRAND ISLE BRIDGE	
PROJECT NUMBER: BHF 028-1(26)	
FILE NAME: z12b142cntrls15.dwg	PLOT DATE: 10/7/2016
PROJECT LEADER: T. FRENCH	DRAWN BY: R. DA SILVA
DESIGNED BY: Y. ADELEKAN	CHECKED BY: K. HAJJEH
CONTROL SCHEMATIC 15	SHEET 111 OF 172

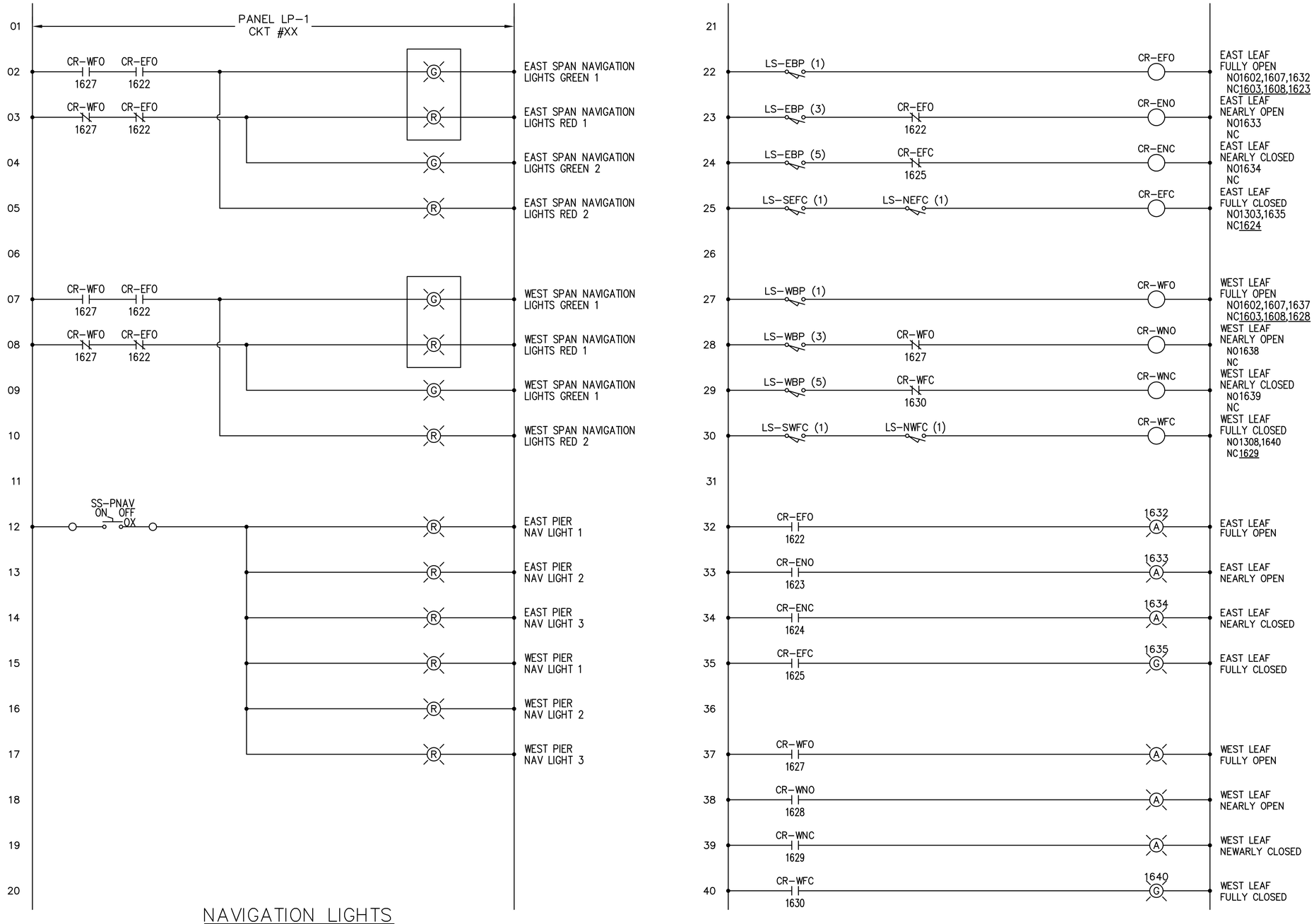

NAVIGATION LIGHTS

PRELIMINARY PLANS

PROJECT NAME: NORTH HERO GRAND ISLE BRIDGE	
PROJECT NUMBER: BHF 028-1(26)	
FILE NAME: z12b142cntrls16.dwg	PLOT DATE: 10/7/2016
PROJECT LEADER: T. FRENCH	DRAWN BY: R. DA SILVA
DESIGNED BY: Y. ADELEKAN	CHECKED BY: K. HAJJEH
CONTROL SCHEMATIC 16	SHEET 112 OF 172

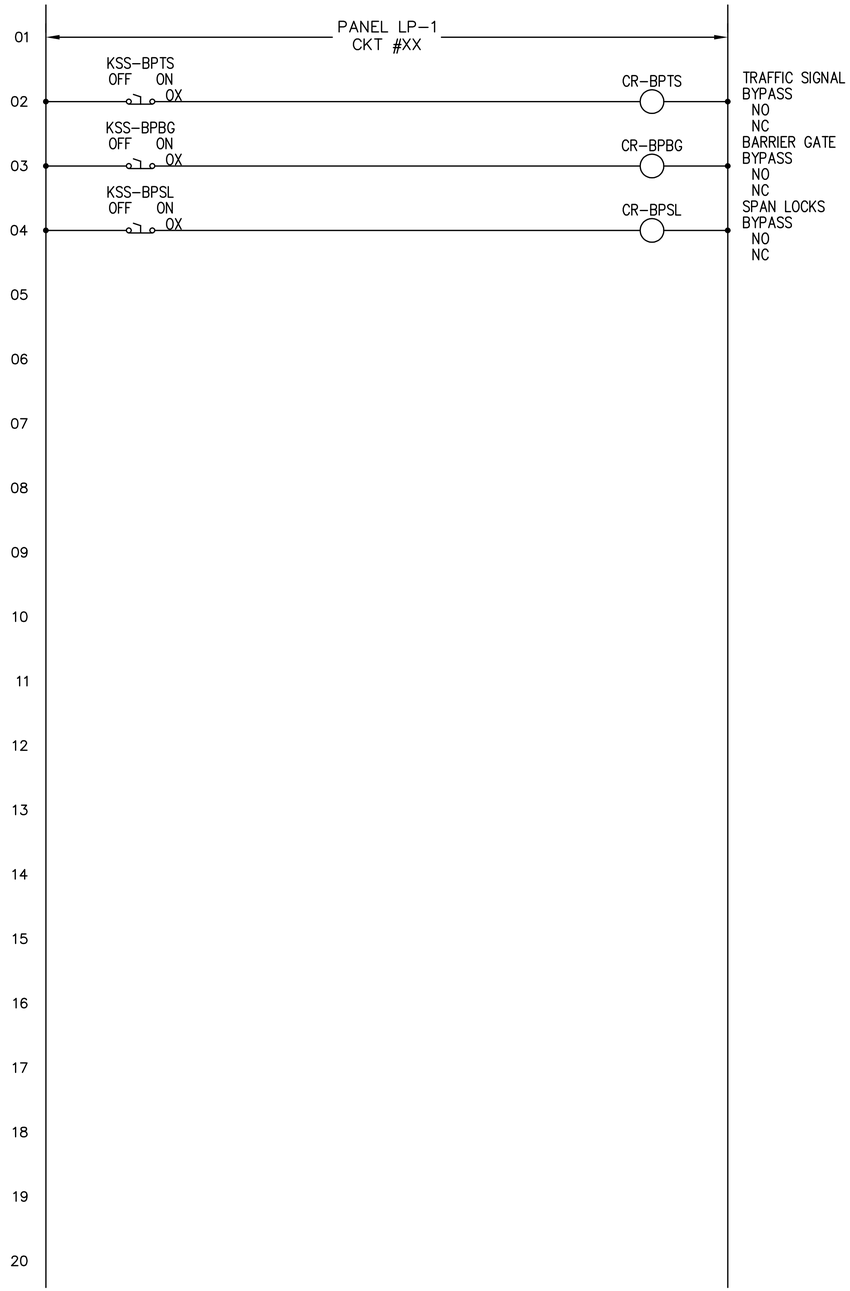

BYPASS SWITCHES

PRELIMINARY PLANS

PROJECT NAME: NORTH HERO GRAND ISLE BRIDGE
PROJECT NUMBER: BHF 028-1(26)

FILE NAME: z12b142cntrls17.dwg
PROJECT LEADER: T. FRENCH
DESIGNED BY: Y. ADELEKAN
CONTROL SCHEMATIC 17

PLOT DATE: 10/7/2016
DRAWN BY: R. DA SILVA
CHECKED BY: K. HAJJEH
SHEET 113 OF 172

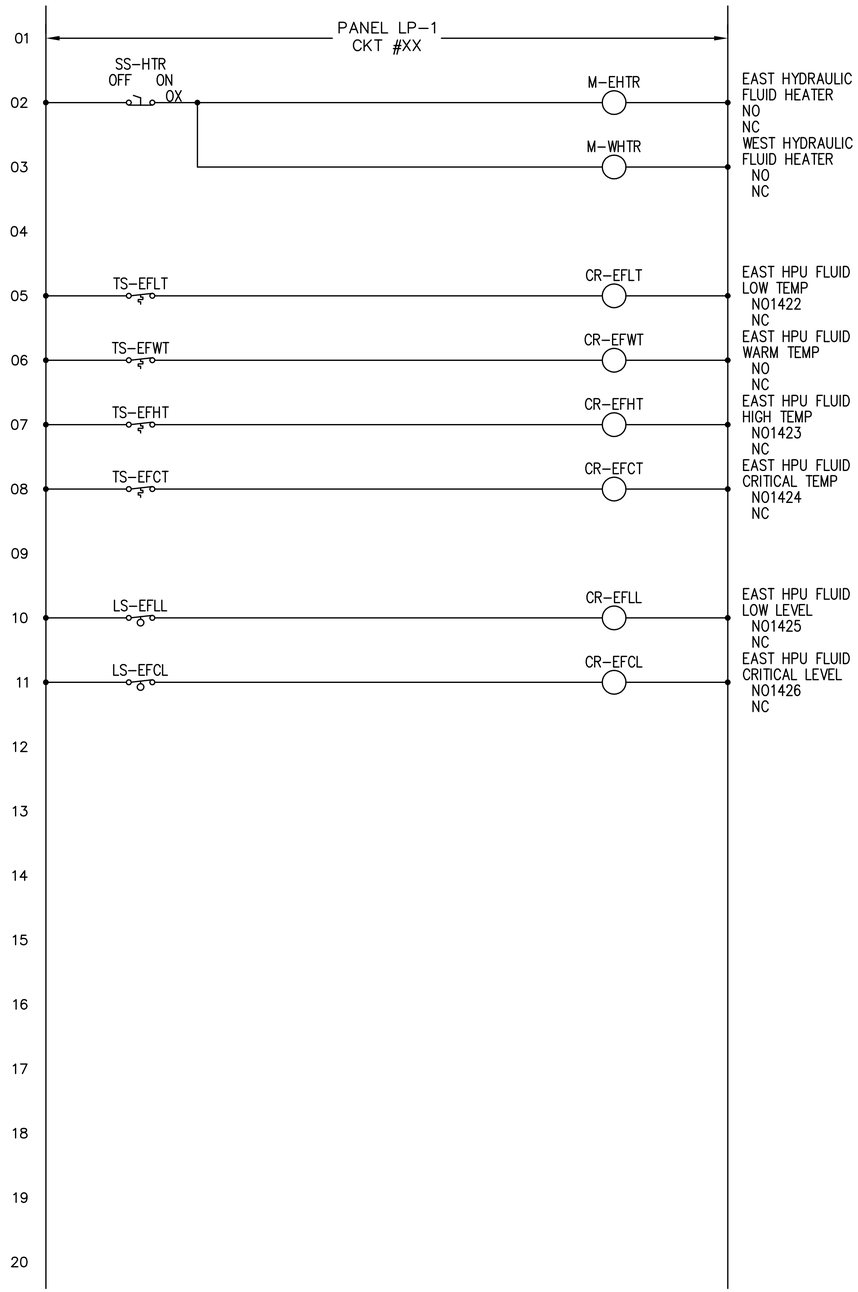

HYDRAULIC HEATER CONTROLS

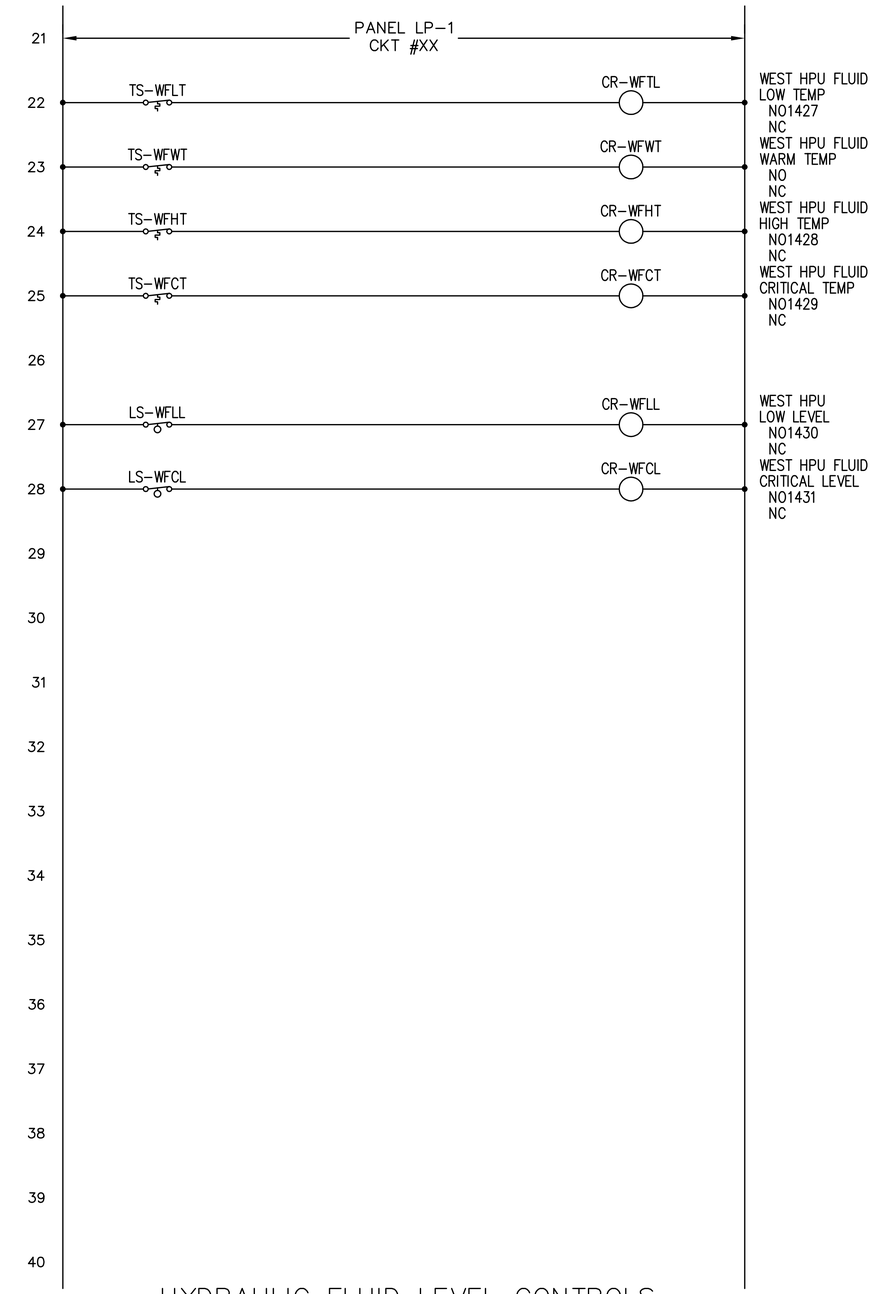

HYDRAULIC FLUID LEVEL CONTROLS

PRELIMINARY PLANS

PROJECT NAME: NORTH HERO GRAND ISLE BRIDGE
PROJECT NUMBER: BHF 028-1(26)

FILE NAME: z12b142cntrls18.dwg
PROJECT LEADER: T. FRENCH
DESIGNED BY: Y. ADELEKAN
CONTROL SCHEMATIC 18

PLOT DATE: 10/7/2016
DRAWN BY: R. DA SILVA
CHECKED BY: K. HAJJEH
SHEET 114 OF 172

THIS SHEET IS

INTENTIONALLY

LEFT BLANK

PRELIMINARY PLANS

PROJECT NAME: NORTH HERO GRAND ISLE BRIDGE
PROJECT NUMBER: BHF 028-1(26)

FILE NAME: z12b142cntrls19.dwg
PROJECT LEADER: T. FRENCH
DESIGNED BY: Y. ADELEKAN
CONTROL SCHEMATIC 19

PLOT DATE: 10/7/2016
DRAWN BY: R. DA SILVA
CHECKED BY: K. HAJJEH
SHEET 115 OF 172

NOTES

1. FOR LEGEND, ABBREVIATIONS, AND GENERAL NOTES, SEE SHEET NO. 91 AND 92.

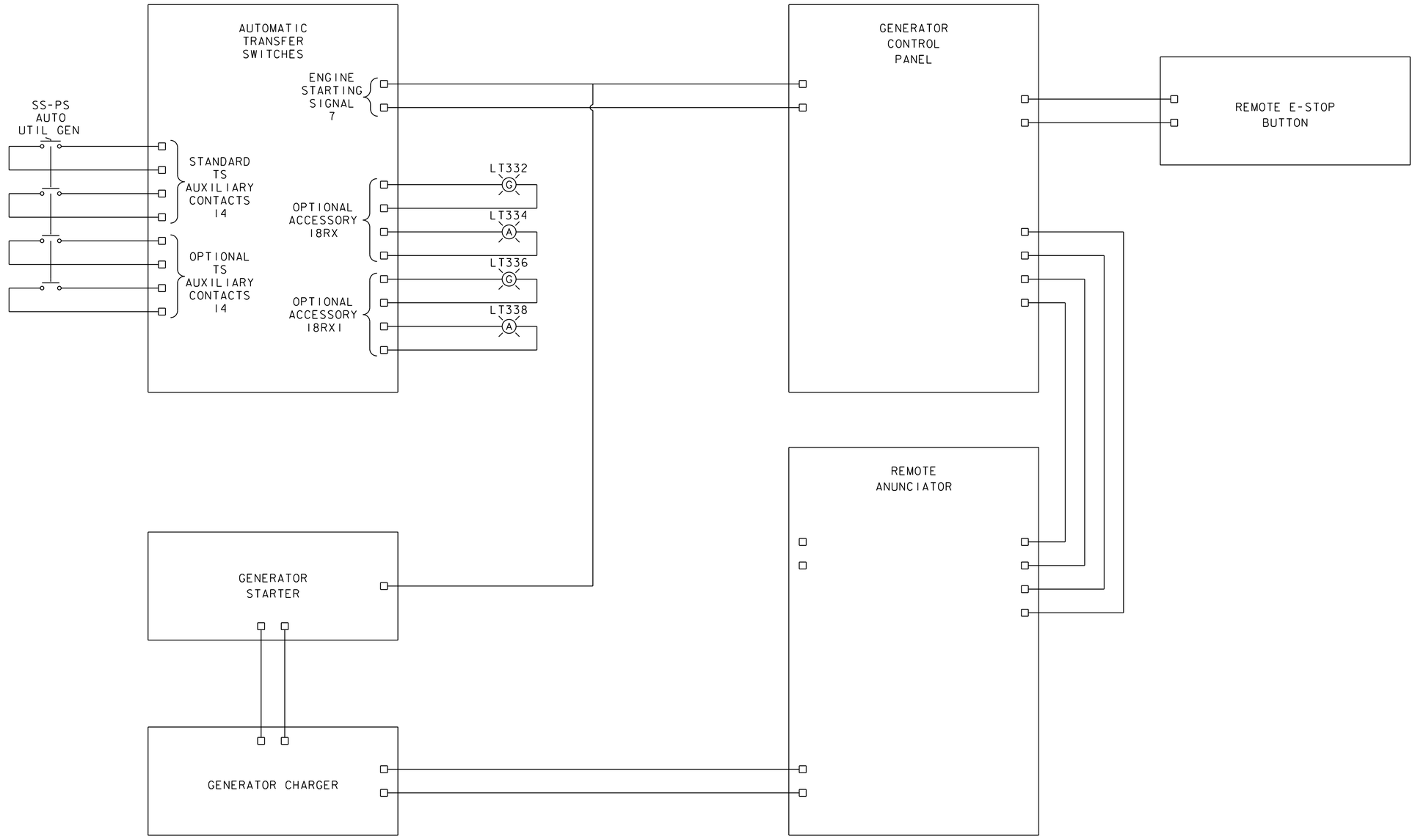

PRELIMINARY PLANS

PROJECT NAME:	NORTH HERO GRAND ISLE BRIDGE
PROJECT NUMBER:	BHF 028-1(26)

FILE NAME: z12b142genint.dgn	PLOT DATE: 10/7/2016
PROJECT LEADER: T. FRENCH	DRAWN BY: R. DA SILVA
DESIGNED BY: Y. ADELEKAN	CHECKED BY: K. HAJJEH
GENERATOR INTERCONNECTION DIAGRAM	SHEET 116 OF 172

NOTES

1. FOR LEGEND, ABBREVIATIONS, AND GENERAL NOTES, SEE SHEET NO. 85 AND 86.

BRIDGE POSITION LIMIT SWITCHS

LIMIT SWITCH	SYMBOL	DEVELOPMENT	FUNCTION
LS-WBP1 LS-EBP1			FULLY OPEN (OPENS AT FULLY OPEN)
LS-WBP2 LS-EBP2			FULLY OPEN (CLOSES AT FULLY OPEN)
LS-WBP3 LS-EBP3			NEARLY OPEN (OPENS AT NEARLY OPEN)
LS-WBP4 LS-EBP4			NEARLY OPEN (CLOSES AT NEARLY OPEN)
LS-WBP5 LS-EBP5			NEARLY CLOSED (OPENS AT NEARLY CLOSED)
LS-WBP6 LS-EBP6			NEARLY CLOSED (CLOSES AT NEARLY CLOSED)
LS-WBP7 LS-EBP7			SPARE
LS-WBP8 LS-EBP8			SPARE

FULLY CLOSED 0° | NEARLY CLOSED 6° | NEARLY OPEN 69° | FULLY OPEN 78°

SPAN FULLY CLOSED LIMIT SWITCHES

LIMIT SWITCH	SYMBOL	DEVELOPMENT	FUNCTION
LS-SWFC1 LS-NWFC1			FULLY CLOSED (CLOSES AT FULLY CLOSED)
LS-SWFC2 LS-NWFC2			FULLY CLOSED (OPENS AT FULLY CLOSED)
LS-SEFC1 LS-NEFC1			FULLY CLOSED (CLOSES AT FULLY CLOSED)
LS-SEFC2 LS-NEFC2			FULLY CLOSED (OPENS AT FULLY CLOSED)

FULLY CLOSED 0° | FULLY OPEN 78°

SPAN OVERTRAVEL LIMIT SWITCHES

LIMIT SWITCH	SYMBOL	DEVELOPMENT	FUNCTION
LS-EOVT			WEST LEAF OVERTRAVEL
LS-WOVT			EAST LEAF OVERTRAVEL

FULLY CLOSED 0° | FULLY OPEN 78° | MAX OPEN 80°

SPAN LOCK LIMIT SWITCHES

LIMIT SWITCH	SYMBOL	DEVELOPMENT	FUNCTION
LS-SELP, LS-NELP LS-SWLP, LS-NWLP			SPAN LOCK PULLED
LS-SELD, LS-NELD LS-SWLD, LS-NWLD			SPAN LOCK DRIVEN

DRIVEN | PULLED

HYDRAULIC FLUID TEMPERATURE SWITCHES

TEMPERATURE SWITCH	SYMBOL	DEVELOPMENT	FUNCTION
TS-EFCT TS-WFCT			CRITICAL HYDRAULIC FLUID TEMPERATURE
TS-EFHT TS-WFHT			HOT HYDRAULIC FLUID TEMPERATURE
TS-EFWT TS-WFWT			WARM HYDRAULIC FLUID TEMPERATURE
TS-EFLT TS-WFLT			LOW HYDRAULIC FLUID TEMPERATURE

25°F | 45°F | 130°F | 150°F

HYDRAULIC FLUID OIL LEVEL SWITCHES

LEVEL SENSOR	SYMBOL	DEVELOPMENT	FUNCTION
TS-EFCT TS-WFCT			CRITICAL (LOW) FLUID LEVEL
TS-EFHT TS-WFHT			LOW FLUID LEVEL

XX | XX
(MEASURED FROM THE HIGH LEVEL POINT)

DEVELOPMENT KEY

CONTACT CLOSED | CONTACT OPEN

PRELIMINARY PLANS

PROJECT NAME: NORTH HERO GRAND ISLE BRIDGE
PROJECT NUMBER: BHF 028-1(26)

FILE NAME: z12bl421imdev.dgn
PROJECT LEADER: T. FRENCH
DESIGNED BY: Y. ADELEKAN
LIMIT SWITCH DEVELOPMENT

PLOT DATE: 10/7/2016
DRAWN BY: R. DA SILVA
CHECKED BY: K. HAJJEH
SHEET 117 OF 172

NOTES

1. FOR LEGEND, ABBREVIATIONS, AND GENERAL NOTES, SEE SHEET NO. 91 AND 92.

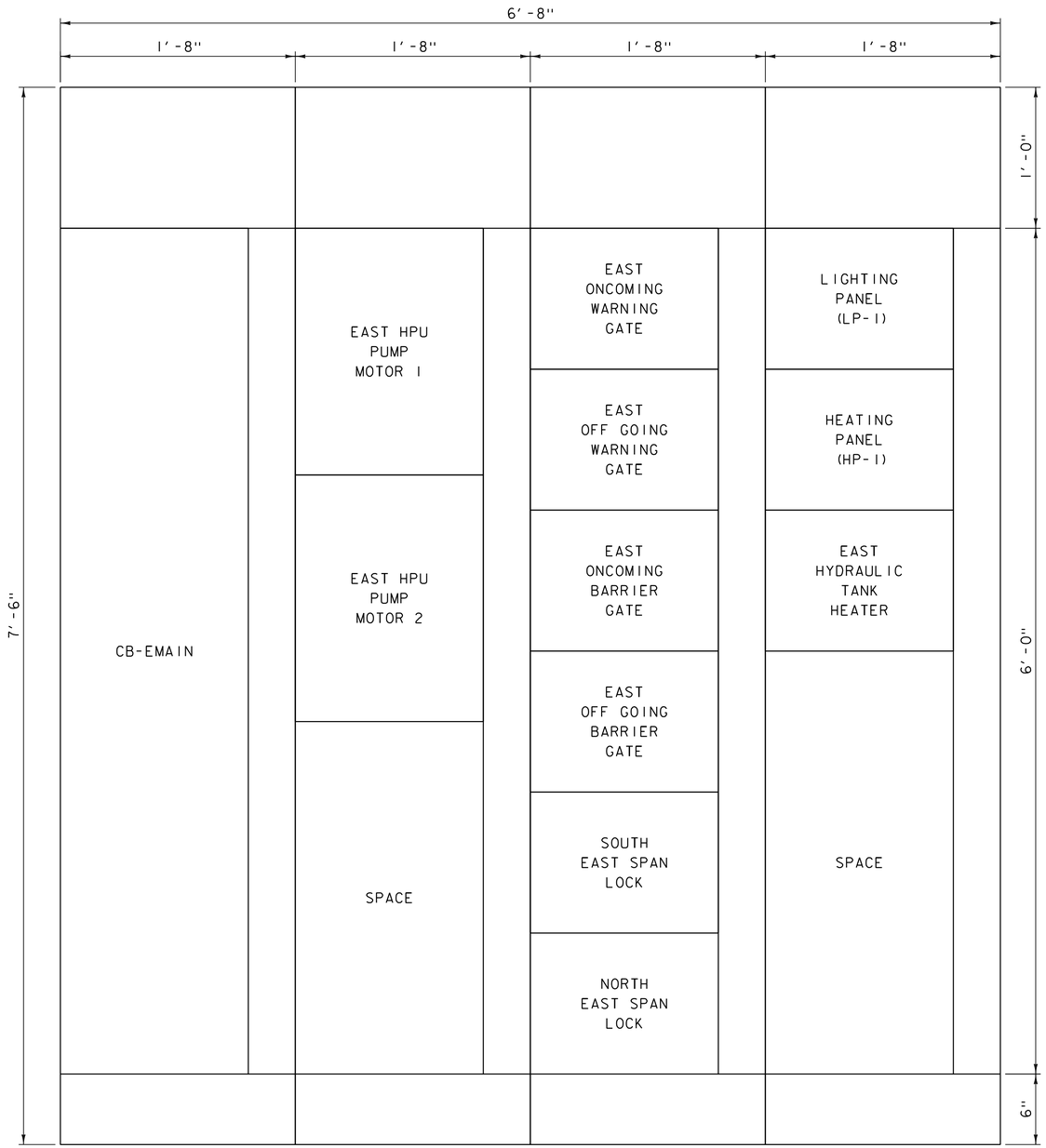

EAST MCC LAYOUT

NOT TO SCALE

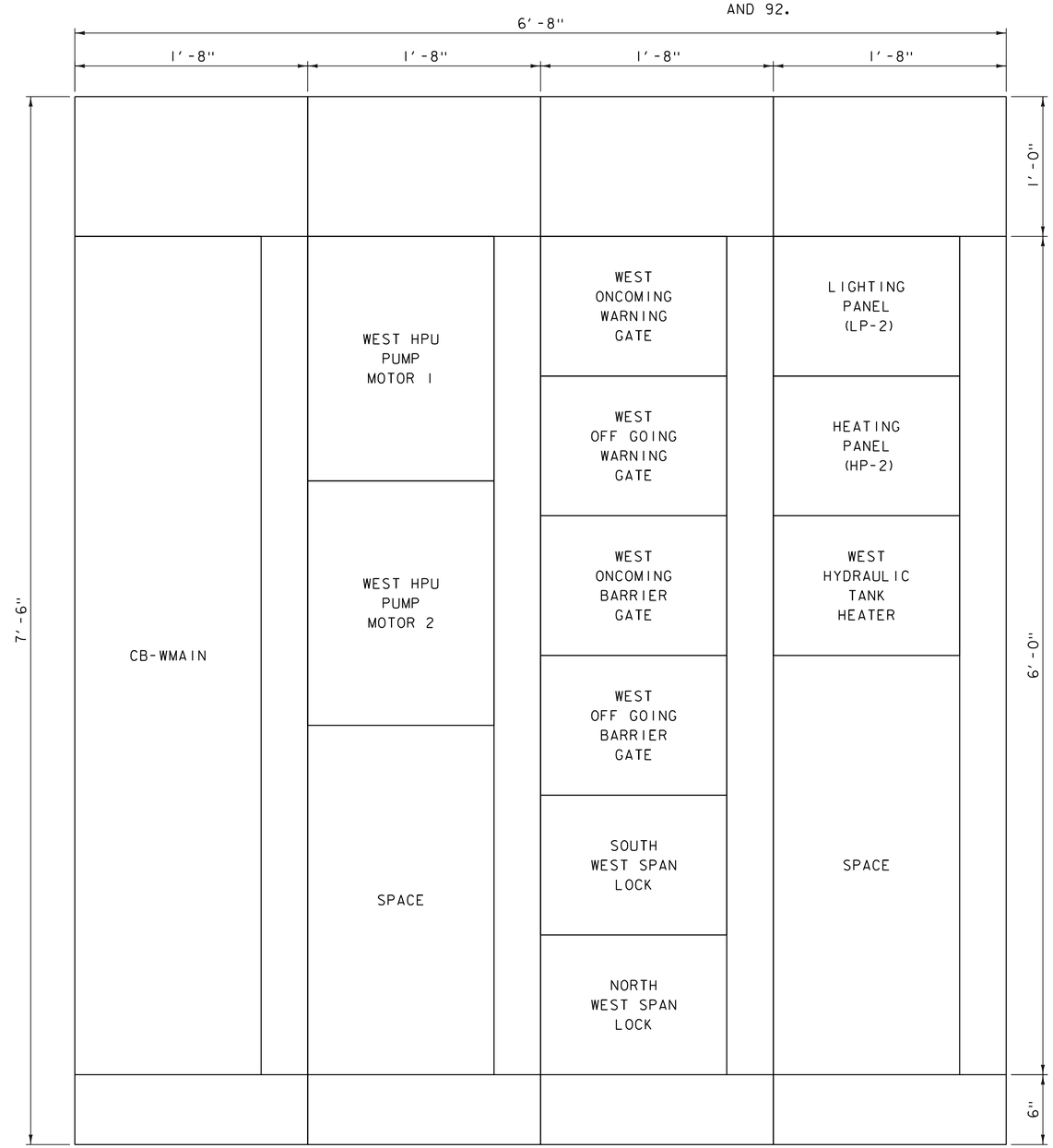

WEST MCC LAYOUT

NOT TO SCALE

PRELIMINARY PLANS

PROJECT NAME: NORTH HERO GRAND ISLE BRIDGE	
PROJECT NUMBER: BHF 028-1(26)	
FILE NAME: z12b142mcc.dgn	PLOT DATE: 10/7/2016
PROJECT LEADER: T. FRENCH	DRAWN BY: R. DA SILVA
DESIGNED BY: Y. ADELEKAN	CHECKED BY: K. HAJJEH
MCC LAYOUT	SHEET 118 OF 172

NOTES

1. FOR LEGEND, ABBREVIATIONS, AND GENERAL NOTES, SEE SHEET NO. 91 AND 92.

2. FINISH CONTROL DESK WITH 120V DUPLEX RECEPTACLE. RECEPTACLE SHALL BE LOCATED IN AN ACCESSIBLE LOCATION.

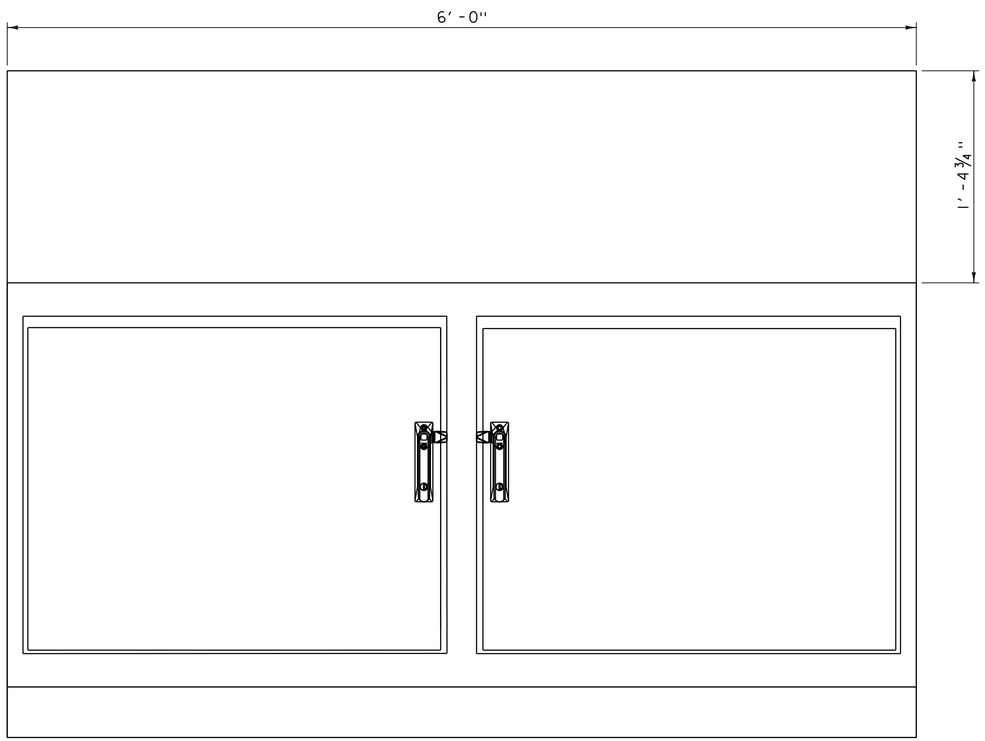

CONTROL DESK FRONT ELEVATION

NOT TO SCALE

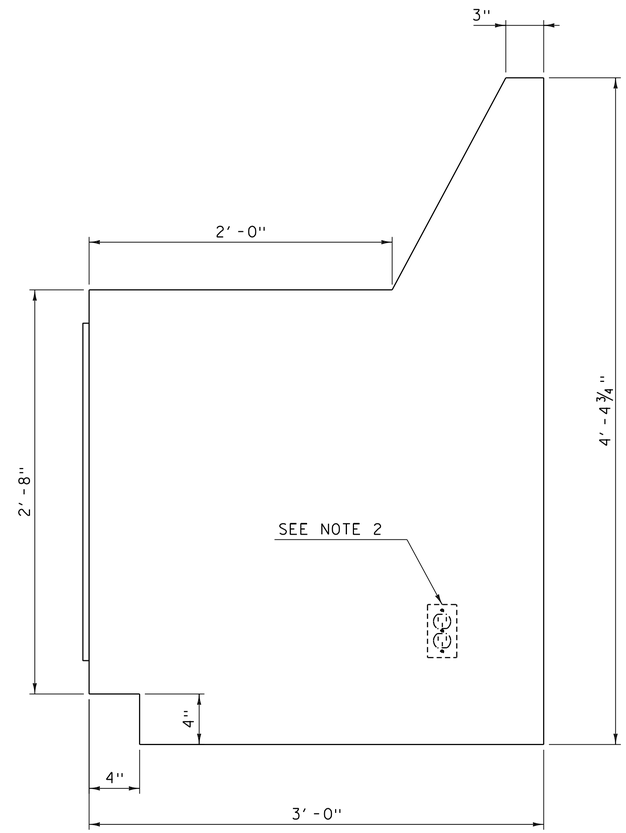

CONTROL DESK SIDE ELEVATION

NOT TO SCALE

PRELIMINARY PLANS

PROJECT NAME: NORTH HERO GRAND ISLE BRIDGE	
PROJECT NUMBER: BHF 028-1(26)	
FILE NAME: z12b142ctrldet.dgn	PLOT DATE: 10/7/2016
PROJECT LEADER: T. FRENCH	DRAWN BY: R. DA SILVA
DESIGNED BY: Y. ADELEKAN	CHECKED BY: K. HAJJEH
CONTROL DESK DETAILS	SHEET 119 OF 172

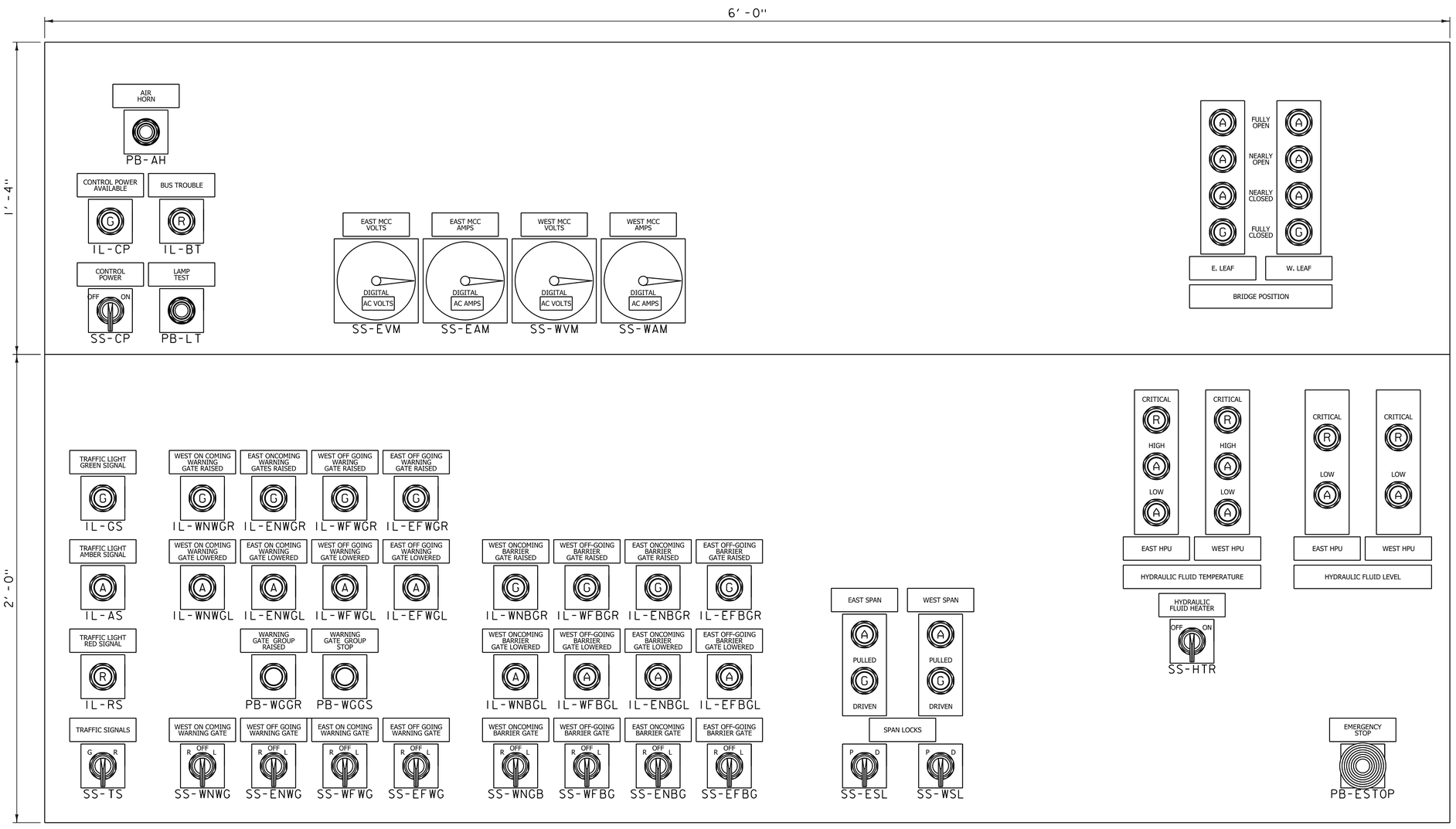

CONTROL DESK LAYOUT

NOT TO SCALE

NOTES

1. FOR LEGEND, ABBREVIATIONS, AND GENERAL NOTES, SEE SHEET NO. 91 AND 92.

2. CONTROL DESK SHALL BE FABRICATED OF 10 GAUGE TYPE 316L NEMA 4X STAINLESS STEEL. DESKTOP SHALL HAVE A NON-GLARE SATIN FINISH.

3. ALL NAMEPLATES SHALL BE HOT-POLISHED, BLACK AND WHITE, LAMINATED PHENOLIC COMPOUND WITH WHITE SURFACES AND INTERMEDIATE BLACK LAYER.

   LETTERING SHALL BE ENGRAVED INTO THE INTERMEDIATE BLACK LAYER. LETTERING SHALL NOT BE SMALLER THAN 1/4". USE HELVETICA MEDIUM TYPE FACE LETTERING.

   ALL NAMEPLATES SHALL BE AFFIXED TO THE DESK WITH STAINLESS STEEL MOUNTING SCREWS.

PRELIMINARY PLANS

PROJECT NAME: NORTH HERO GRAND ISLE BRIDGE	
PROJECT NUMBER: BHF 028-1(26)	
FILE NAME: z12b142ctrdsiay.dgn	PLOT DATE: 10/7/2016
PROJECT LEADER: T. FRENCH	DRAWN BY: R. DA SILVA
DESIGNED BY: Y. ADELEKAN	CHECKED BY: K. HAJJEH
CONTROL DESK LAYOUT	SHEET 120 OF 172

NOTES

1. FOR LEGEND, ABBREVIATIONS, AND GENERAL NOTES, SEE SHEET NO. 91 AND 92.

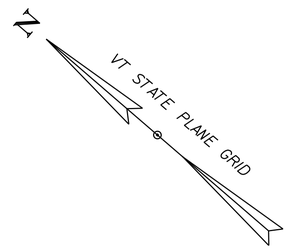

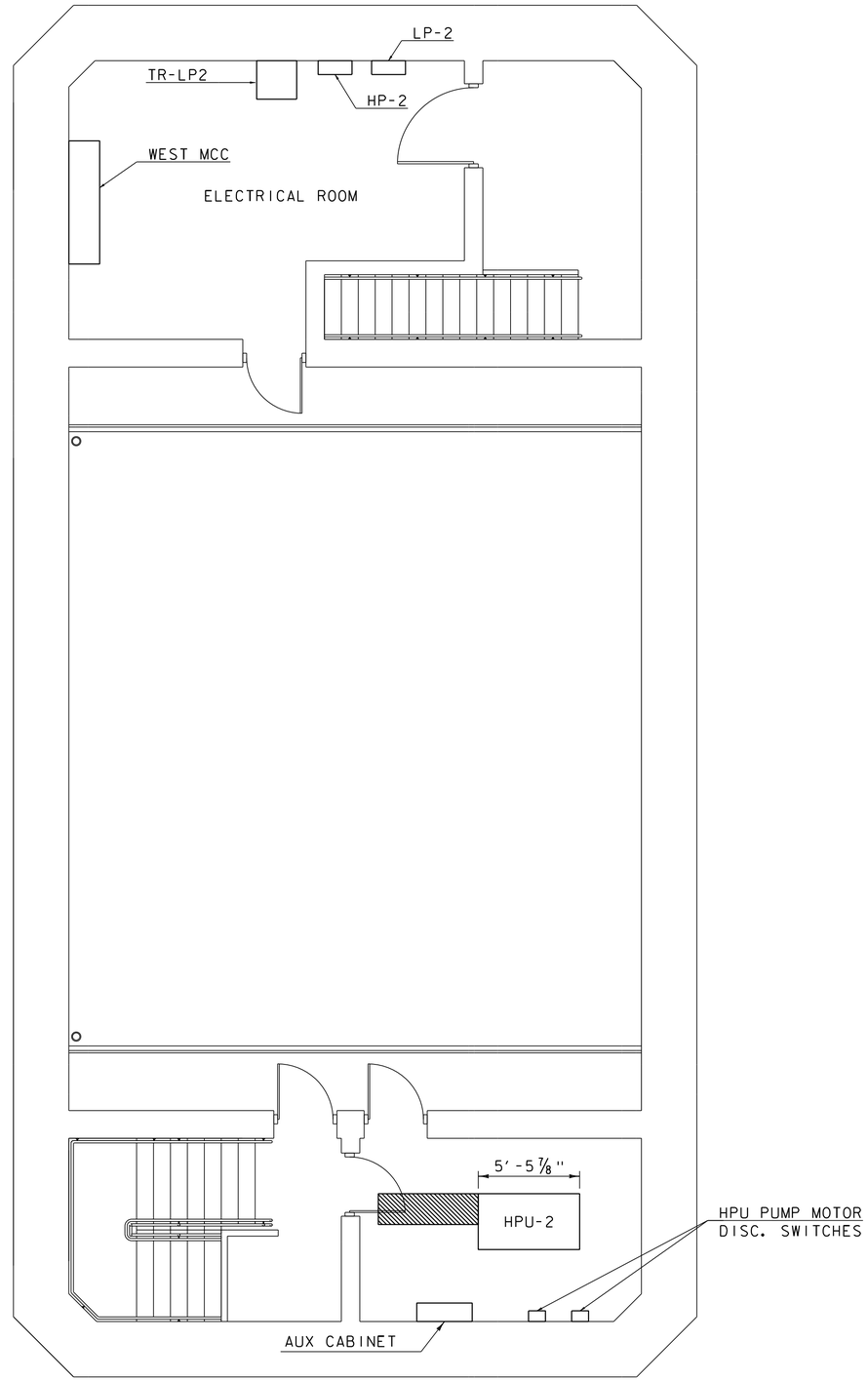

CLEAR SPACE FOR HEATER MAINTENANCE

PRELIMINARY PLANS

CONTROL HOUSE - PIER 1 - LEVEL 2 EQUIPMENT LAYOUT (EL. 108.32)

SCALE 1/4" = 1'-0"

PROJECT NAME: NORTH HERO GRAND ISLE BRIDGE	
PROJECT NUMBER: BHF 028-1(26)	
FILE NAME: z12b142pier12.dgn	PLOT DATE: 10/7/2016
PROJECT LEADER: T. FRENCH	DRAWN BY: R. DA SILVA
DESIGNED BY: Y. ADELEKAN	CHECKED BY: K. HAJJEH
PIER 1 LEVEL 2 LAYOUT	SHEET 121 OF 172

NOTES

1. FOR LEGEND, ABBREVIATIONS, AND GENERAL NOTES, SEE SHEET NO. 91 AND 92.

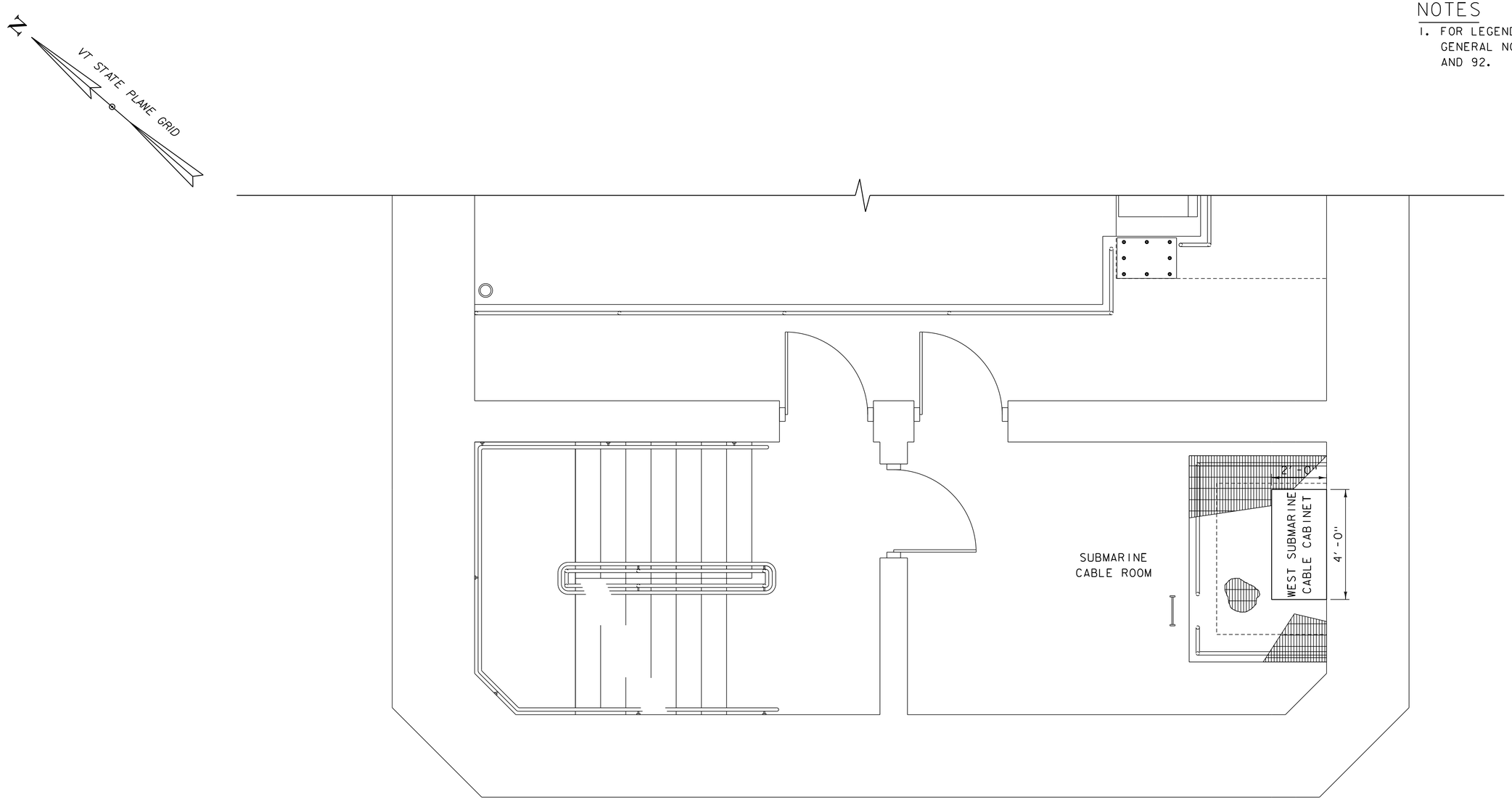

PIER 1 - LEVEL 3 EQUIPMENT LAYOUT (El. 99.80)

SCALE ½" = 1'-0"

PRELIMINARY PLANS

PROJECT NAME:	NORTH HERO GRAND ISLE BRIDGE
PROJECT NUMBER:	BHF 028-1(26)

FILE NAME: z12b142pier13.dgn	PLOT DATE: 10/7/2016
PROJECT LEADER: T. FRENCH	DRAWN BY: R. DA SILVA
DESIGNED BY: Y. ADELEKAN	CHECKED BY: K. HAJJEH
PIER 1 LEVEL 3 LAYOUT	SHEET 122 OF 172

NOTES

1. FOR LEGEND, ABBREVIATIONS, AND GENERAL NOTES, SEE SHEET NO. 91 AND 92.

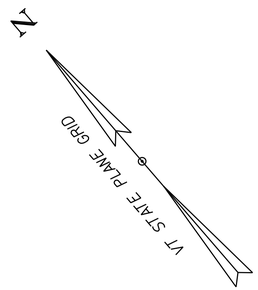

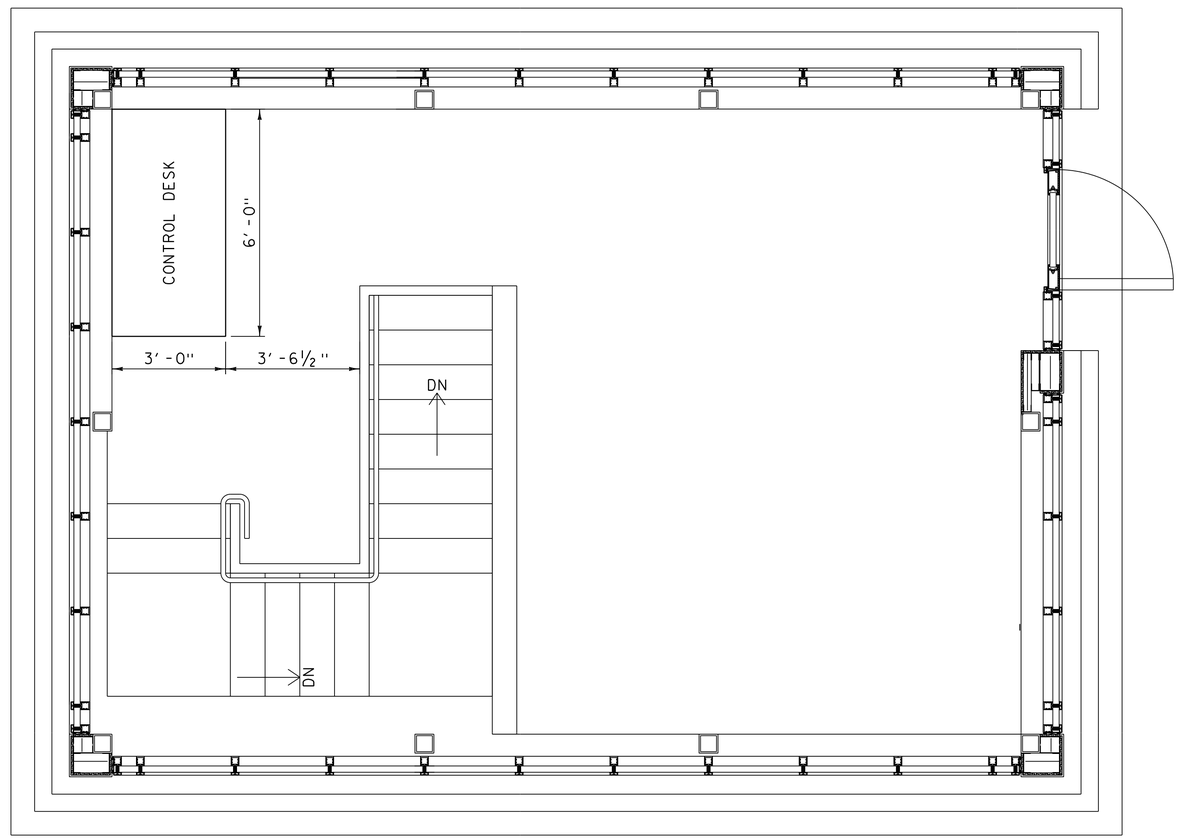

CONTROL HOUSE - PIER 2 - LEVEL 1 EQUIPMENT LAYOUT (EL. 120.57)

SCALE ½" = 1'-0"

PRELIMINARY PLANS

PROJECT NAME: NORTH HERO GRAND ISLE BRIDGE	
PROJECT NUMBER: BHF 028-1(26)	
FILE NAME: z12b142ctrlhsl.dgn	PLOT DATE: 10/7/2016
PROJECT LEADER: T. FRENCH	DRAWN BY: R. DA SILVA
DESIGNED BY: Y. ADELEKAN	CHECKED BY: K. HAJJEH
CONTROL HOUSE LEVEL 1 LAYOUT	SHEET 123 OF 172

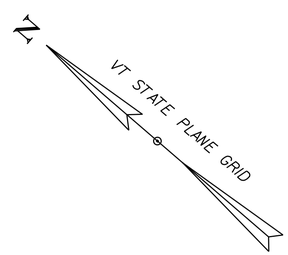

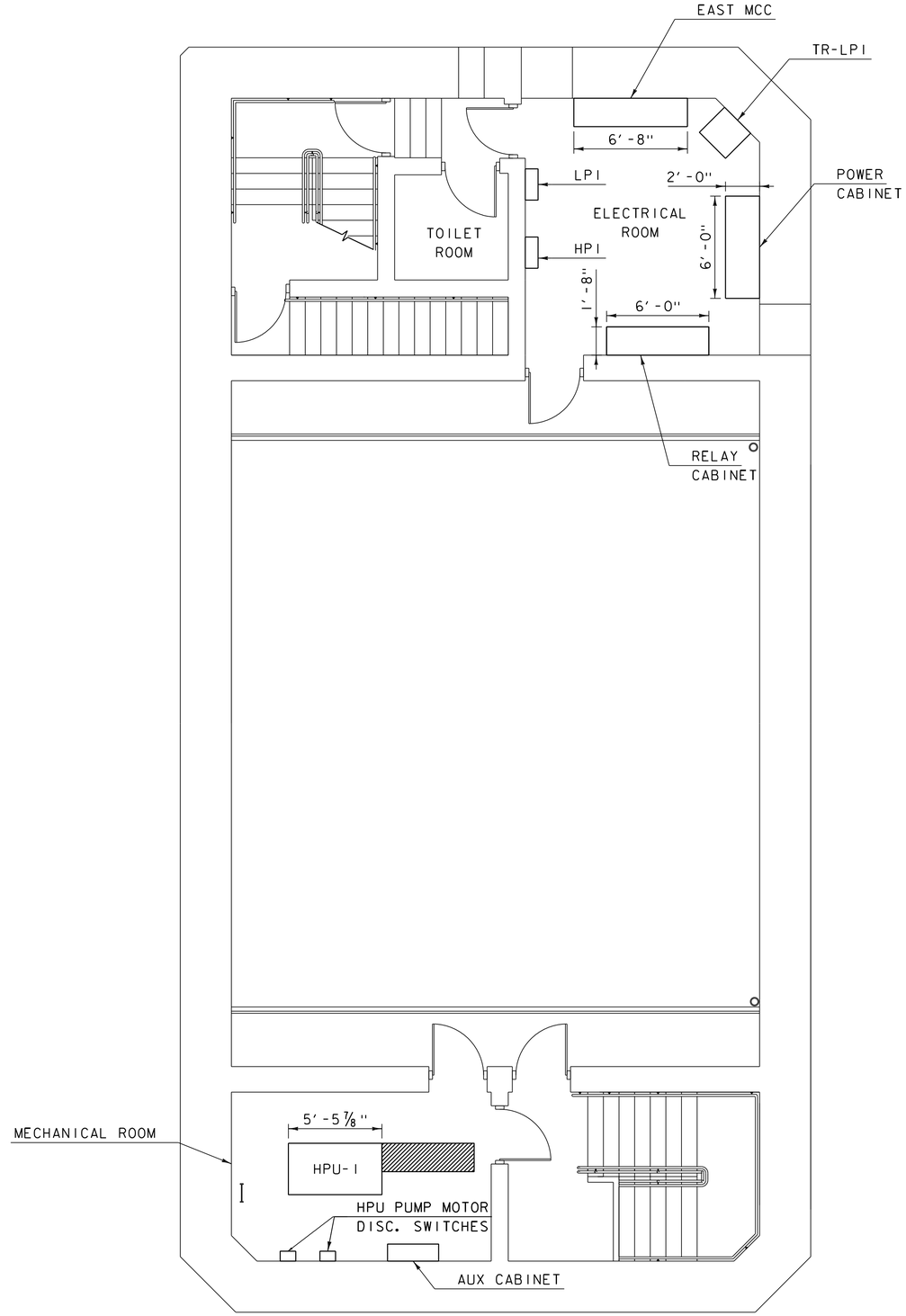

NOTES

1. FOR LEGEND, ABBREVIATIONS, AND GENERAL NOTES, SEE SHEET NO. 91 AND 92.

CLEAR SPACE FOR HEATER MAINTENANCE

PRELIMINARY PLANS

CONTROL HOUSE - PIER 2 - LEVEL 2 EQUIPMENT LAYOUT (EL. 108.32)

SCALE 1/4" = 1'-0"

PROJECT NAME: NORTH HERO GRAND ISLE BRIDGE	
PROJECT NUMBER: BHF 028-1(26)	
FILE NAME: zl2bl42ctrlhs2.dgn	PLOT DATE: 10/7/2016
PROJECT LEADER: T. FRENCH	DRAWN BY: R. DA SILVA
DESIGNED BY: Y. ADELEKAN	CHECKED BY: K. HAJJEH
CONTROL HOUSE LEVEL 2 LAYOUT	SHEET 124 OF 172

NOTES

1. FOR LEGEND, ABBREVIATIONS, AND GENERAL NOTES, SEE SHEET NO. 91 AND 92.

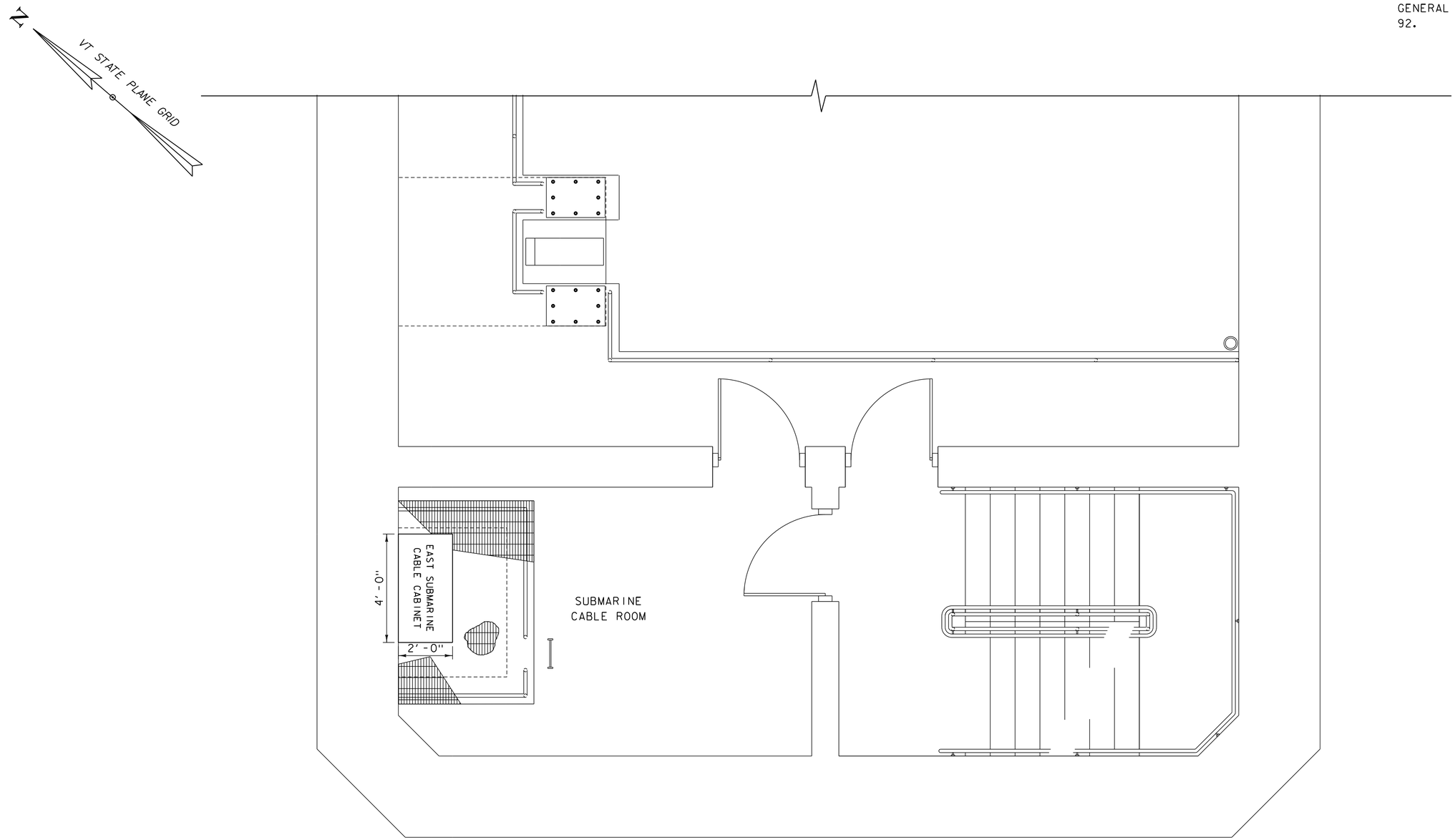

CONTROL HOUSE - PIER 2 - LEVEL 3 EQUIPMENT LAYOUT (EL. 99.80)

SCALE ½" = 1'-0"

PRELIMINARY PLANS

HDR

PROJECT NAME: NORTH HERO GRAND ISLE BRIDGE	
PROJECT NUMBER: BHF 028-1(26)	
FILE NAME: z12b142ctrlhs3.dgn	PLOT DATE: 10/7/2016
PROJECT LEADER: T. FRENCH	DRAWN BY: R. DA SILVA
DESIGNED BY: Y. ADELEKAN	CHECKED BY: K. HAJJEH
CONTROL HOUSE LEVEL 3 LAYOUT	SHEET 125 OF 172

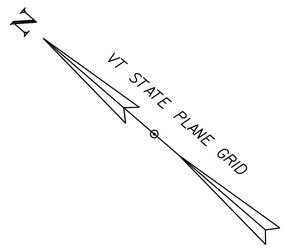

NOTES

1. FOR LEGEND, ABBREVIATIONS, AND GENERAL NOTES, SEE SHEET NO. 91 AND 92.
2. ALL ELECTRICAL DEMOLITION TO BE PAID FOR UNDER ITEM 529.15, REMOVAL OF STRUCTURE.

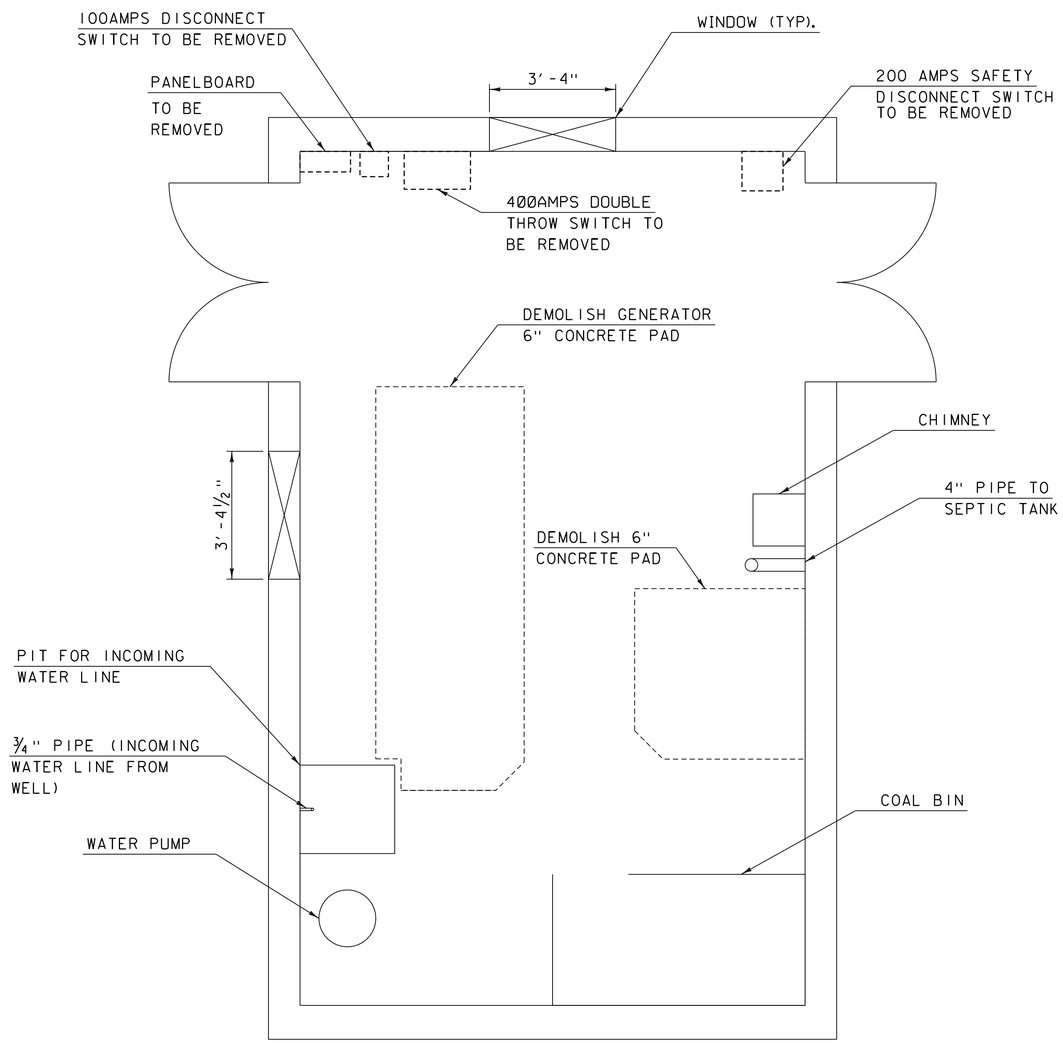

TENDER HOUSE - BASEMENT LEVEL DEMOLITION PLAN

SCALE: ½" = 1'-0"

PRELIMINARY PLANS

PROJECT NAME:	NORTH HERO GRAND ISLE BRIDGE
PROJECT NUMBER:	BHF 028-1(26)

FILE NAME: z12b142tenhs2.dgn	PLOT DATE: 10/7/2016
PROJECT LEADER: T. FRENCH	DRAWN BY: R. DA SILVA
DESIGNED BY: Y. ADELEKAN	CHECKED BY: K. HAJJEH
EXISTING TENDER HOUSE BASEMENT LAYOUT	SHEET 126 OF 172

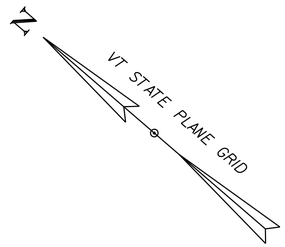

NOTES

1. FOR LEGEND, ABBREVIATIONS, AND GENERAL NOTES, SEE SHEET NO. 91 AND 92.
2. THE 4"HOUSE KEEPING PAD SHALL EXTEND 6" FROM THE EQUIPMET EDGE ON ALL SIDES.

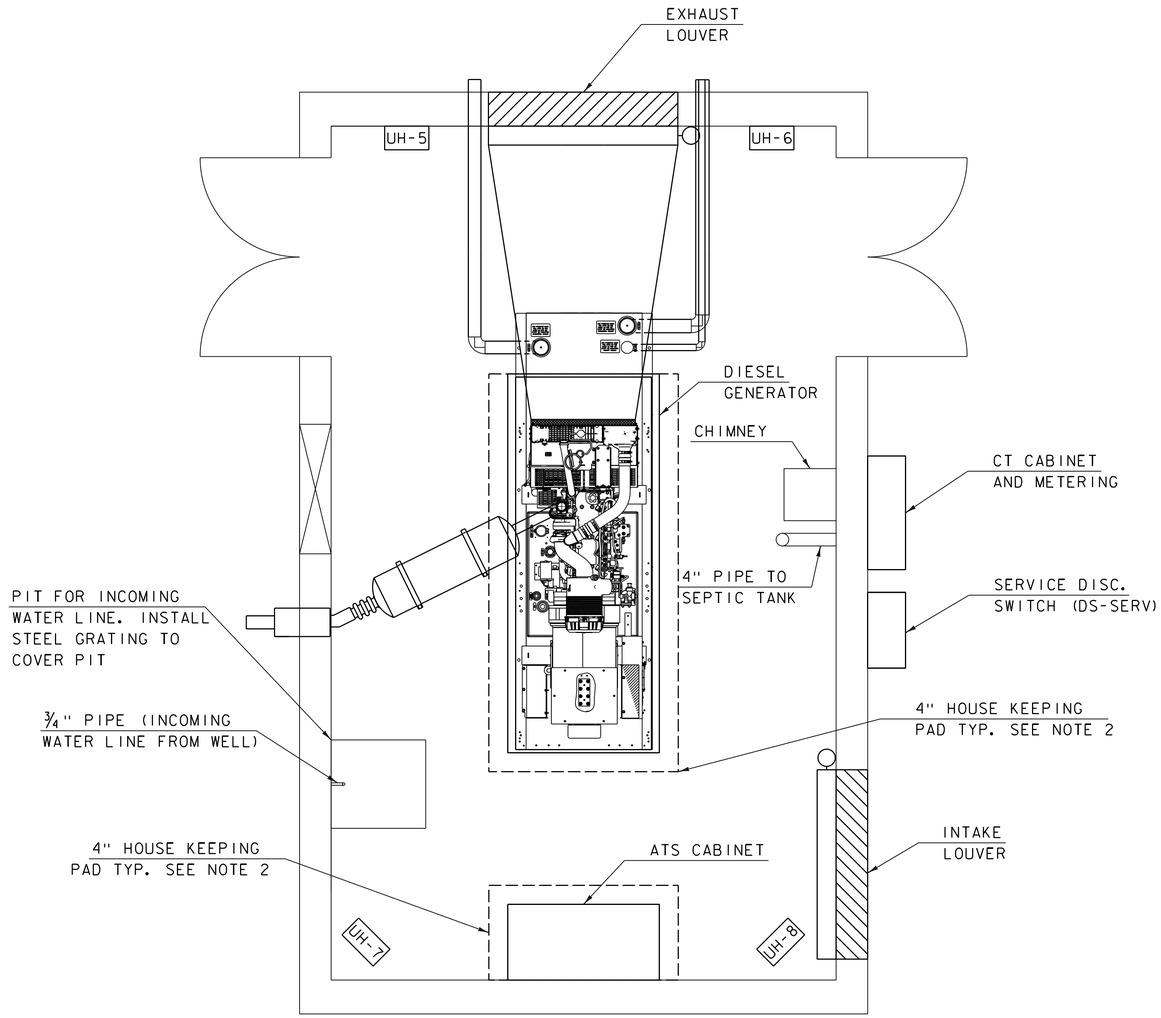

PROPOSED TENDER HOUSE - BASEMENT LEVEL LAYOUT

SCALE 1/2" = 1'-0"

PRELIMINARY PLANS

HDR

PROJECT NAME:	NORTH HERO GRAND ISLE BRIDGE
PROJECT NUMBER:	BHF 028-1(26)

FILE NAME: z12b142tenhsl.dgn	PLOT DATE: 10/7/2016
PROJECT LEADER: T. FRENCH	DRAWN BY: R. DA SILVA
DESIGNED BY: Y. ADELEKAN	CHECKED BY: K. HAJJEH
PROPOSED TENDER HOUSE BASEMENT LAYOUT	SHEET 127 OF 172

NOTES

1. FOR LEGEND, ABBREVIATIONS, AND GENERAL NOTES, SEE SHEET NO. 91 AND 92.

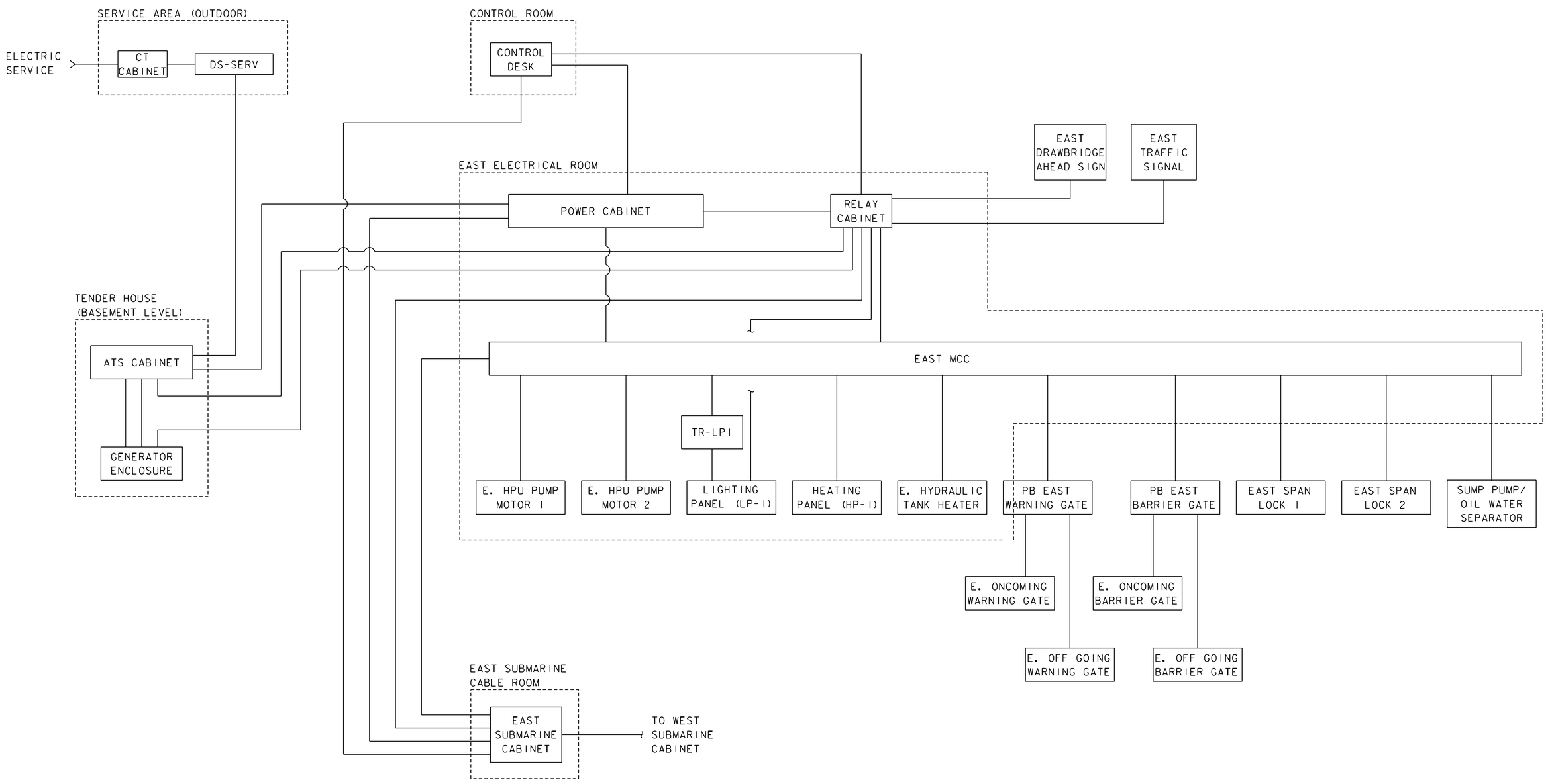

PRELIMINARY PLANS

PROJECT NAME:	NORTH HERO GRAND ISLE BRIDGE
PROJECT NUMBER:	BHF 028-1(26)

FILE NAME: z12b142blckdial.dgn	PLOT DATE: 10/7/2016
PROJECT LEADER: T. FRENCH	DRAWN BY: S. SCHULMAN
DESIGNED BY: Y. ADELEKAN	CHECKED BY: K. HAJJEH
CONDUIT BLOCK DIAGRAM 1 OF 2	SHEET 128 OF 172

NOTES

1. FOR LEGEND, ABBREVIATIONS, AND GENERAL NOTES, SEE SHEET NO. 91 AND 92.

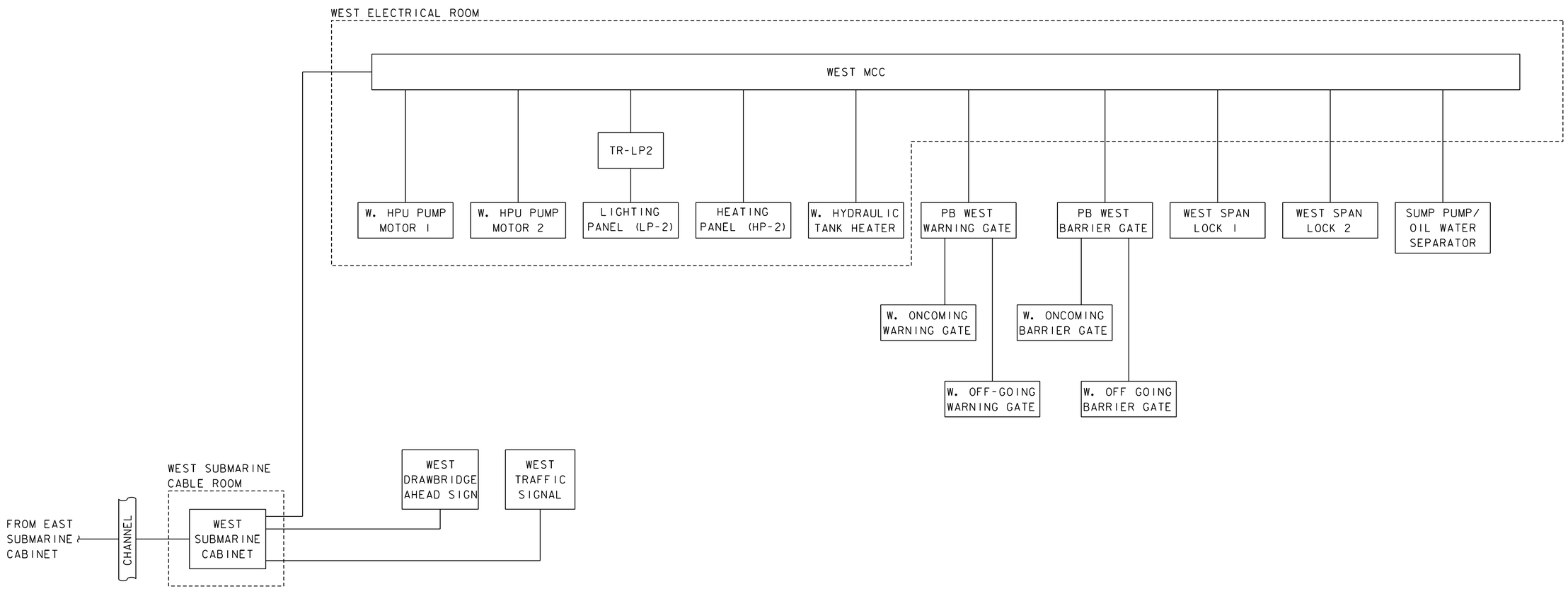

PRELIMINARY PLANS

PROJECT NAME:	NORTH HERO GRAND ISLE BRIDGE
PROJECT NUMBER:	BHF 028-1(26)

FILE NAME: zl2bl42blckdia2.dgn	PLOT DATE: 10/7/2016
PROJECT LEADER: T. FRENCH	DRAWN BY: S. SCHULMAN
DESIGNED BY: Y. ADELEKAN	CHECKED BY: K. HAJJEH
CONDUIT BLOCK DIAGRAM 2 OF 2	SHEET 129 OF 172

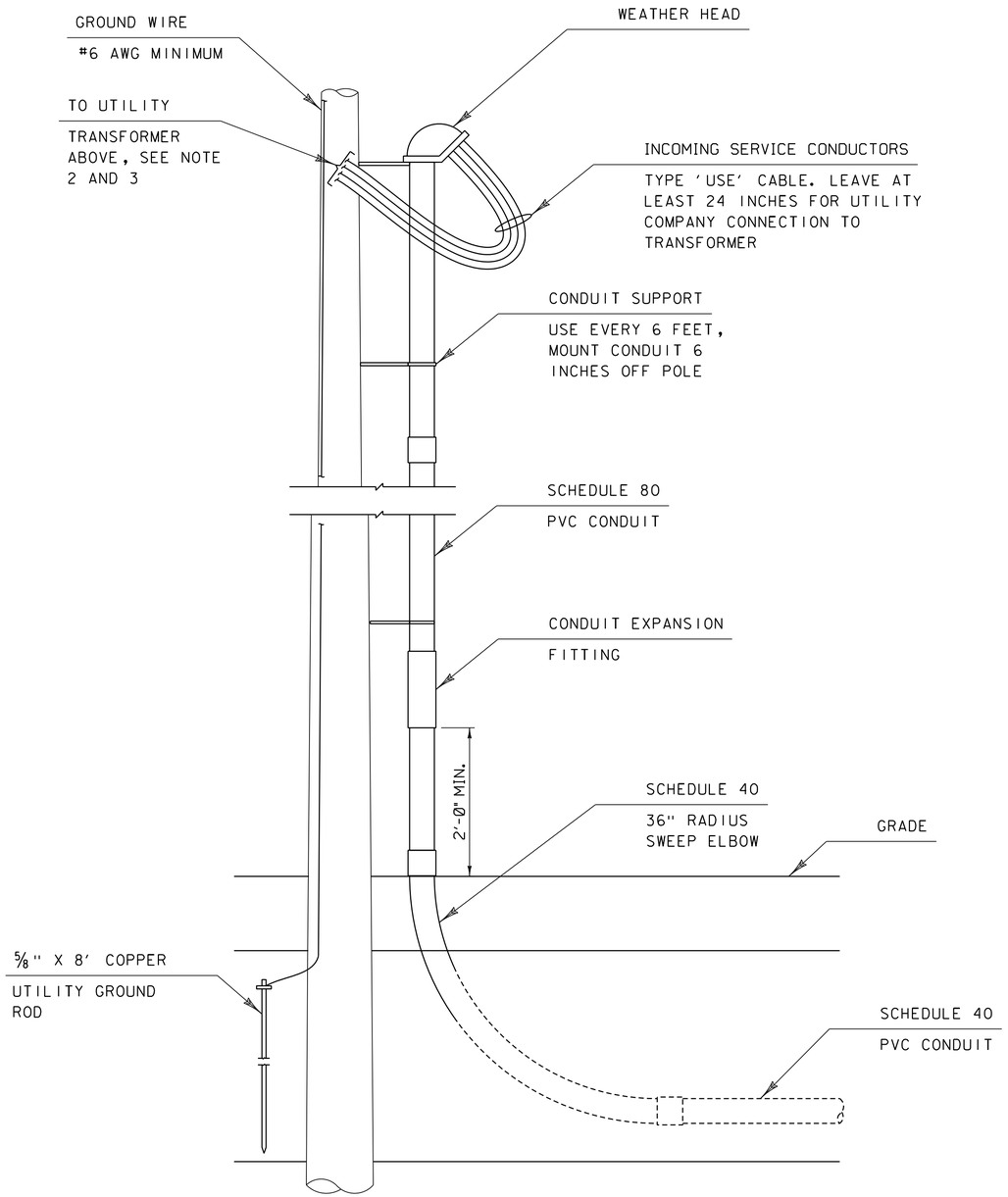

ELECTRIC UTILITY RISER POLE DETAILS

NOT TO SCALE

NOTES

1. FOR LEGEND, ABBREVIATIONS, AND GENERAL NOTES, SEE SHEET NO. 91 AND 92.
2. UTILITY TRANSFORMER SHALL BE SUPPLIED BY VERMONT ELECTRIC COOP. (VT ELECTRIC).
3. CONNECTION TO TRANSFORMER SHALL BE MADE BY VT ELECTRIC UPON APPROVAL FROM THE VERMONT DIVISION OF FIRE AND SAFETY. AN APPROVED ENERGIZING PERMIT IS REQUIRED. SECURE ENERGIZING PERMIT WITH THE VERMONT DIVISION OF FIRE AND SAFETY.
4. INSTALLATION OF THE NEW ELECTRIC SERVICE EQUIPMENT SHALL BE PERFORMED BY A MASTER ELECTRICIAN LICENSED IN THE STATE OF VERMONT.
5. INSTALLATION SHALL BE IN ACCORDANCE WITH THE LATEST VERSION OF THE NATIONAL ELECTRIC CODE AND THE LATEST VERSION OF THE "VERMONT UTILITIES ELECTRIC SERVICE REQUIREMENTS" MANUAL.

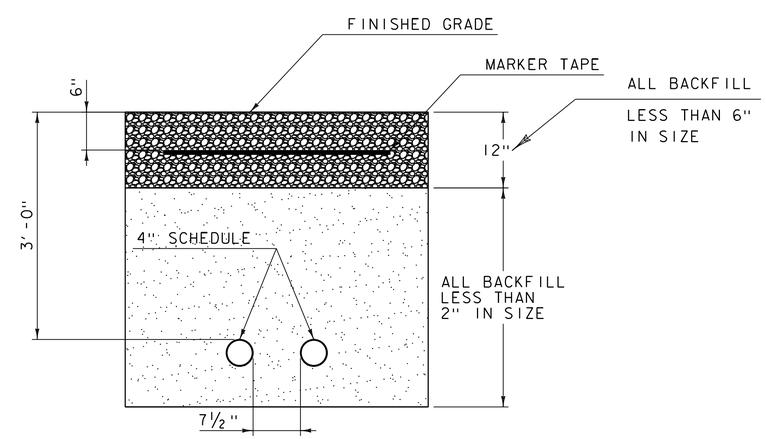

CONDUIT TRENCH DETAILS

SCALE: 1" = 1'-0"

PRELIMINARY PLANS

PROJECT NAME: NORTH HERO GRAND ISLE BRIDGE	
PROJECT NUMBER: BHF 028-1(26)	
FILE NAME: z12b142utildet.dgn	PLOT DATE: 10/7/2016
PROJECT LEADER: T. FRENCH	DRAWN BY: R. DA SILVA
DESIGNED BY: Y. ADELEKAN	CHECKED BY: K. HAJJEH
ELECTRIC UTILITY DETAILS	SHEET 130 OF 172

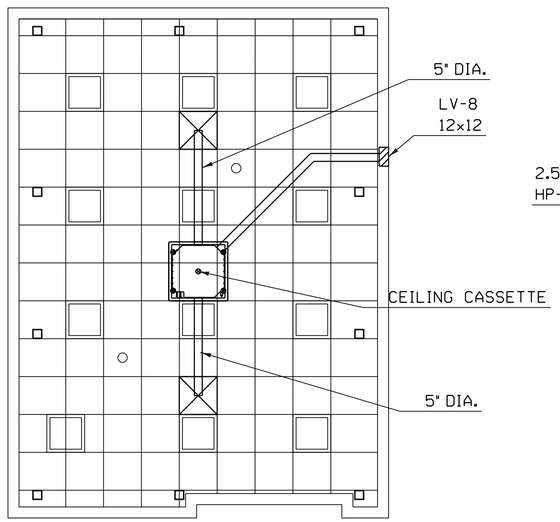

CONTROL HOUSE REFLECTED CEILING PLAN

SCALE 1/4" = 1'-0"

4' 0 4'

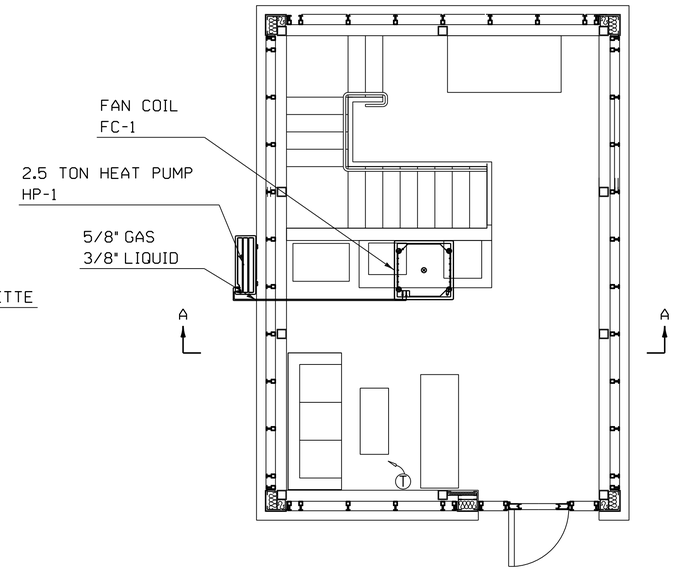

CONTROL HOUSE FLOOR PLAN

SCALE 1/4" = 1'-0"

4' 0 4'

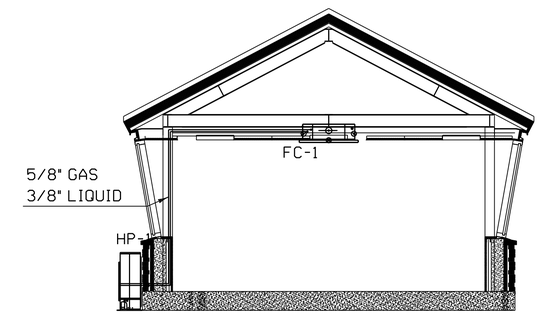

SECTION A-A

SCALE 1/4" = 1'-0"

4' 0 4'

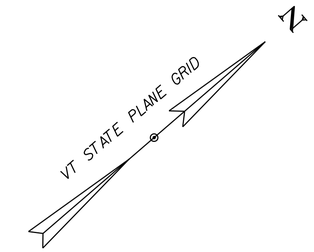

PRELIMINARY PLANS

PROJECT NAME:	NORTH HERO GRAND ISLE BRIDGE
PROJECT NUMBER:	BHF 028-1(26)

FILE NAME: z12b142_HVACch.dgn	PLOT DATE: 10/7/2016
PROJECT LEADER: T. FRENCH	DRAWN BY: A. LEM
DESIGNED BY: A. LEM	CHECKED BY: M. WHALEN
HVAC CONTROL HOUSE	SHEET 131 OF 172

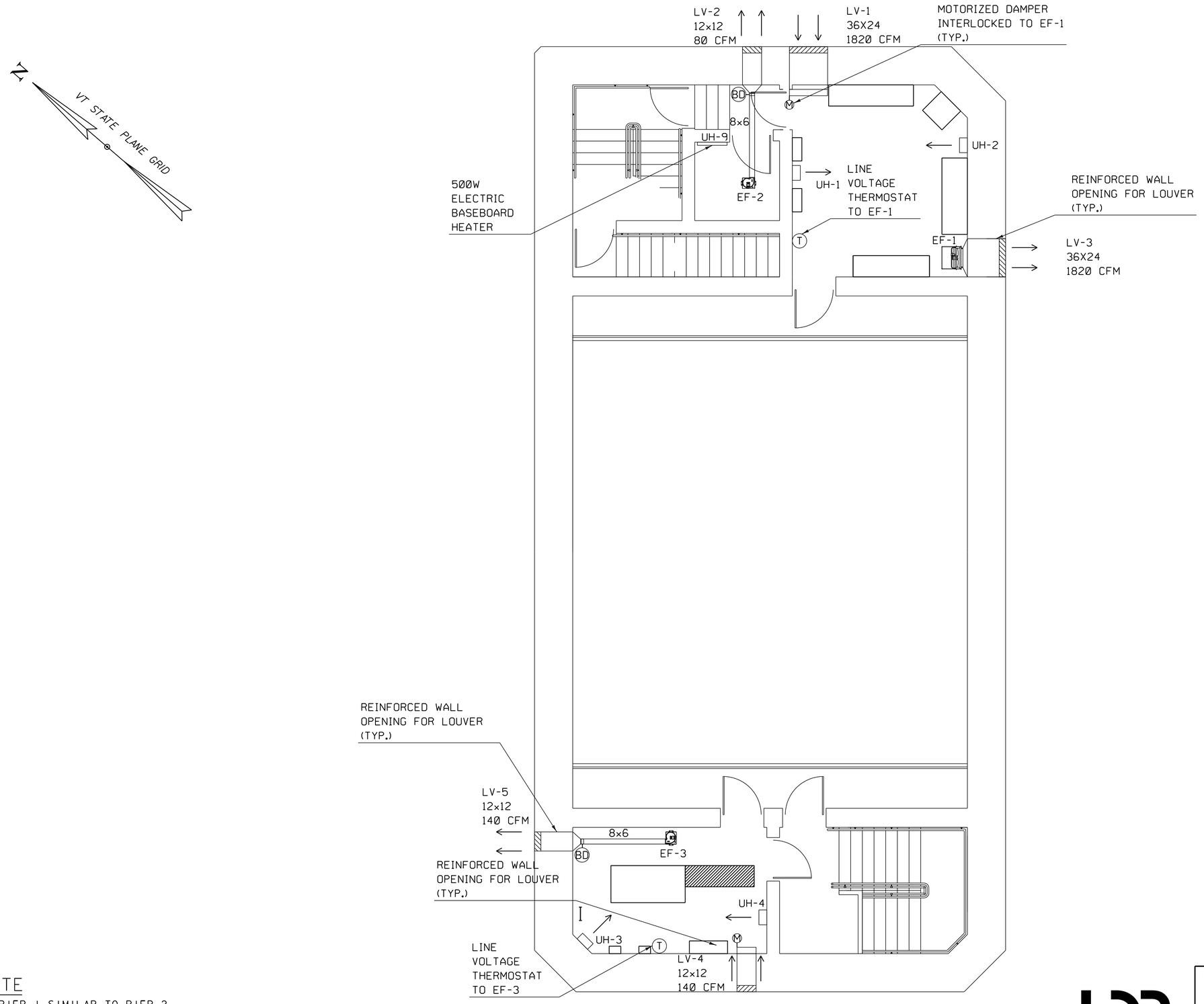

HVAC PIER 2 PLAN AT EL. 108.32

SCALE 1/4" = 1'-0"

4' 0 4'

NOTE

1. PIER 1 SIMILAR TO PIER 2.

PRELIMINARY PLANS

PROJECT NAME: NORTH HERO GRAND ISLE BRIDGE	
PROJECT NUMBER: BHF 028-1(26)	
FILE NAME: z12b142p2hvaclevel1.dgn	PLOT DATE: 10/7/2016
PROJECT LEADER: T. FRENCH	DRAWN BY: A. LEM
DESIGNED BY: A. LEM	CHECKED BY: M. WHALEN
HVAC PIER 2 PLAN AT EL.108.32	SHEET 132 OF 172

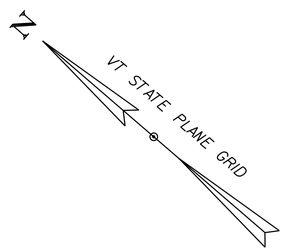

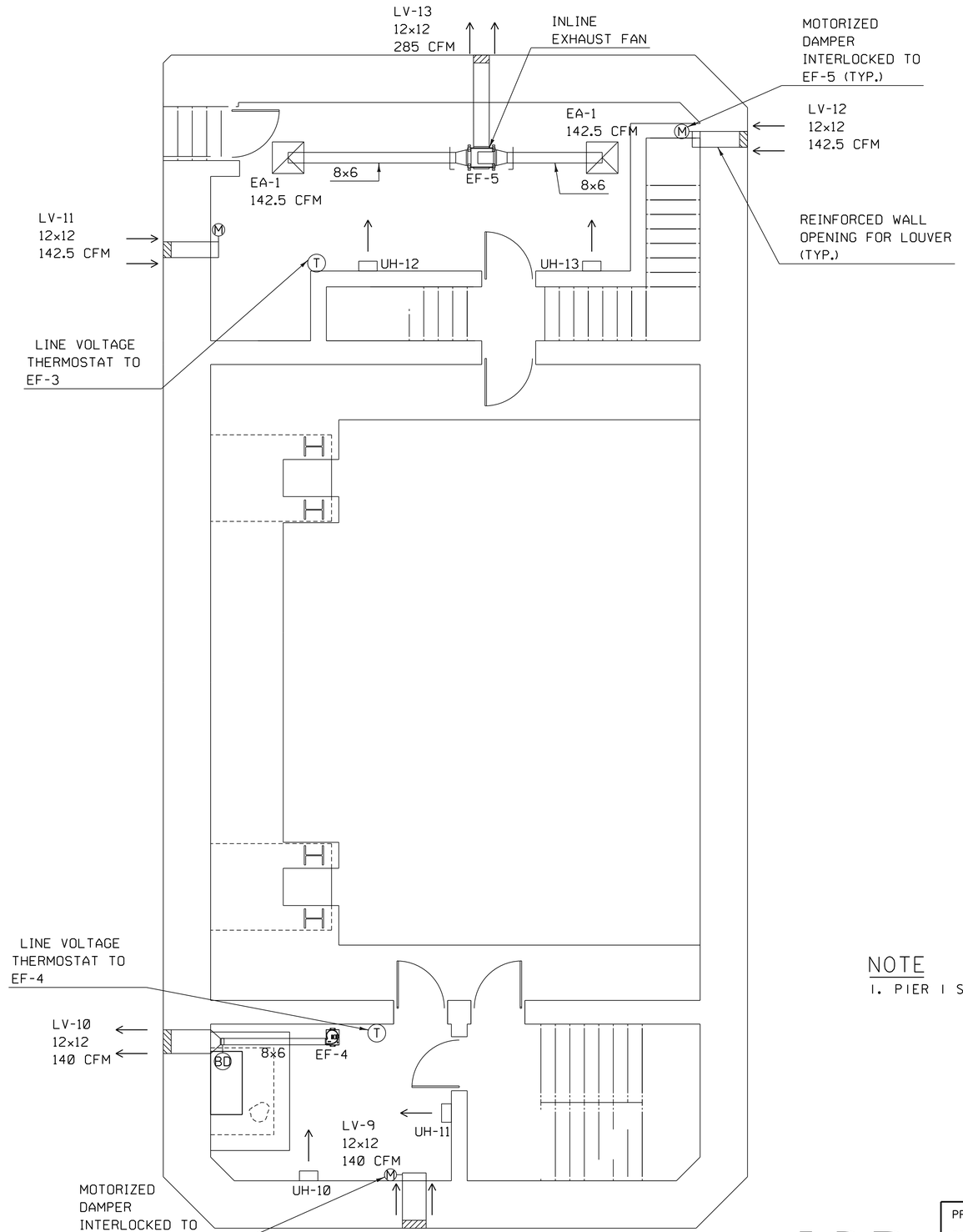

HVAC PIER 2 PLAN AT EL. 99.80

SCALE 1/4" = 1'-0"

4' 0 4'

NOTE

1. PIER 1 SIMILAR TO PIER 2.

PRELIMINARY PLANS

PROJECT NAME: NORTH HERO GRAND ISLE BRIDGE	
PROJECT NUMBER: BHF 028-1(26)	
FILE NAME: z12b142P2hvaclevel2.dgn	PLOT DATE: 10/7/2016
PROJECT LEADER: T. FRENCH	DRAWN BY: A. LEM
DESIGNED BY: A. LEM	CHECKED BY: M. WHALEN
HVAC PIER 2 PLAN AT EL.98.99	SHEET 133 OF 172

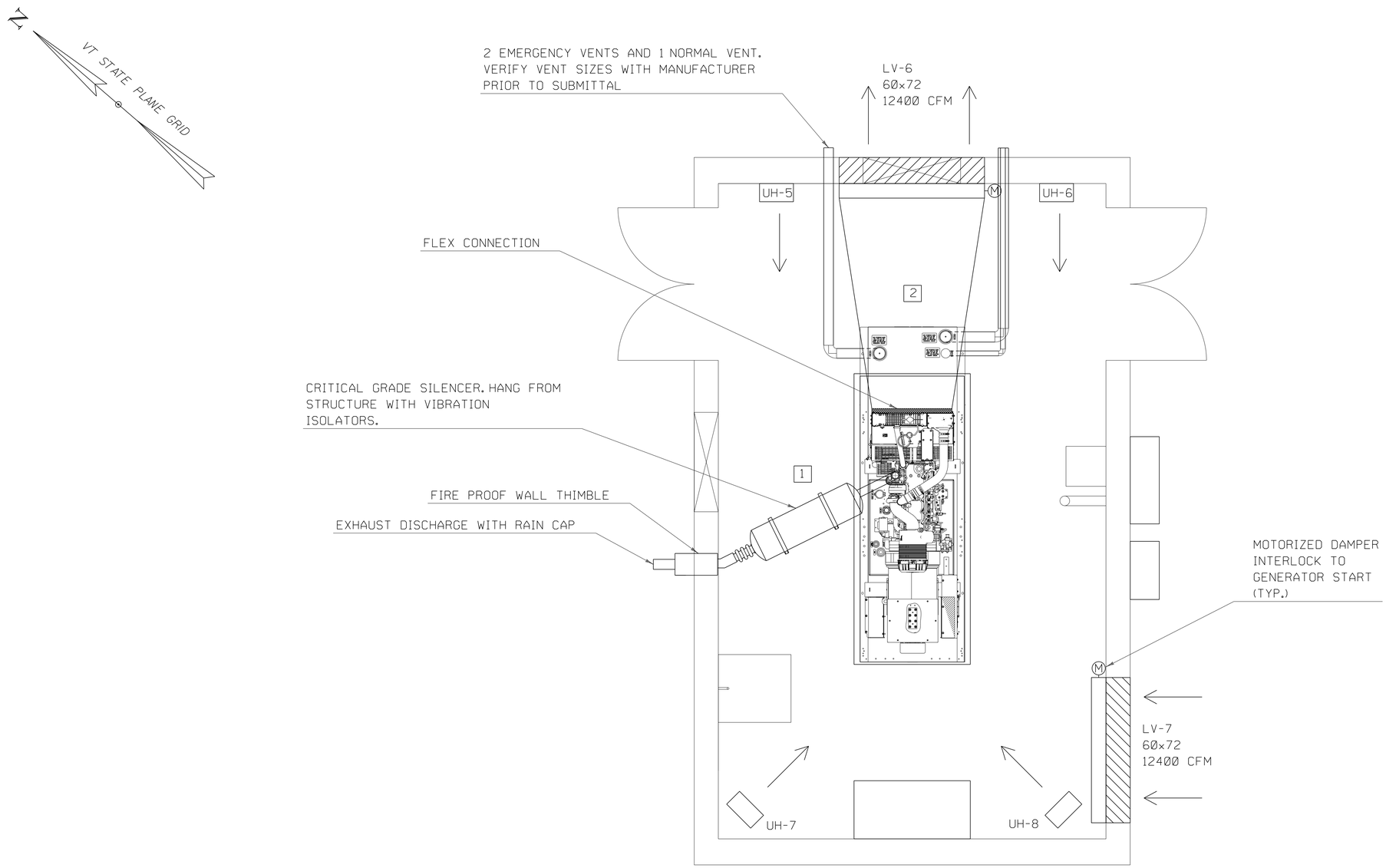

HVAC PROPOSED TENDER HOUSE - BASEMENT LEVEL LAYOUT

SCALE ½" = 1'-0"

KEY WORK NOTES

1 FURNISH AND INSTALL A CRITICAL GRADE EXHAUST SILENCER APPROVED BY THE ENGINE MANUFACTURER TO ENSURE THAT EXHAUST BACK PRESSURE DOES NOT EXCEED THE MAXIMUM LIMITATIONS SPECIFIED BY THE ENGINE MANUFACTURER. A FLEXIBLE STAINLESS STEEL EXHAUST CONNECTION, MINIMUM 12 INCHES LONG, SHALL BE INSTALLED BETWEEN THE ENGINE AND EXHAUST TO MINIMIZE VIBRATION. THE EXHAUST AND SILENCERS SHALL BE PAINTED WITH HIGH TEMPERATURE PAINT, THERMALLY INSULATED WITH ALUMINUM JACKET.

SILENCER SHALL BE THERMALLY INSULATED WITH A MINIMUM OF TWO STAGGERED LAYERS TOTALING 4" THICK OF HEAT RESISTANT CALCIUM SILICATE INSULATION OVER AN OUTER COVERING OF FABRICATED SHEET ALUMINUM FASTENED WITH STAINLESS STEEL SCREWS. INSULATION SHALL ACHIEVE A RESULTING OPERATING EXTERIOR SURFACE TEMPERATURE NOT TO EXCEED 150°F.

CALCIUM SILICATE INSULATION SHALL CONFORM WITH ASTM C533, TYPE 1, AND SHALL BE SCHULLER "THERMO-12 GOLD" WITH 200 PSI COMPRESSION STRENGTH, OR APPROVED EQUAL.

INSULATION JACKET SHALL BE 0.016 INCH ALUMINUM, FACTORY APPLIED, WITH A BUILT IN ISOLATION FELT. ALL SEAMS AND JOINTS SHALL BE SEALED. ALUMINUM JACKET SHALL HAVE A CORRUGATED OR STUCCO-TYPE FINISH.

THE EXHAUST SILENCER SHALL BE MOUNTED HORIZONTALLY WITH A SPRING TYPE HEAT AND VIBRATION ISOLATOR. A FLEXIBLE STAINLESS STEEL EXHAUST CONNECTOR SHALL ALSO ISOLATE THE EXHAUST PIPE FROM THE SILENCER.

THE OPENING IN THE WALL SHALL BE LARGE ENOUGH TO TAKE THE EXHAUST PIPE WITH A 4" AIR GAP. A UL LISTED APPROVED WALL THIMBLE SHALL BE INSTALLED IN COMPLIANCE WITH NFPA 37 AND NFPA 110 WHERE THE EXHAUST PIPE PENETRATES THE WALL.

2 FIELD FABRICATED ALUMINUM SHEET METAL TRANSITION AND 6 INCH LONG HIGH TEMPERATURE FLEXIBLE CONNECTION. CONSTRUCT PER SMACNA FOR A 1" W.G. STATIC PRESSURE. FURNISH AND INSTALL 18"X36" ACCESS DOORS ON ONE SIDE OF THE DUCT. SUPPORT DUCT FROM THE FLOOR AND NOT FROM THE FLEXIBLE CONNECTION.

PRELIMINARY PLANS

PROJECT NAME: NORTH HERO GRAND ISLE BRIDGE	
PROJECT NUMBER: BHF 028-1(26)	
FILE NAME: z12b142hvactenhsl.dgn	PLOT DATE: 10/7/2016
PROJECT LEADER: T. FRENCH	DRAWN BY: A. LEM
DESIGNED BY: A. LEM	CHECKED BY: M. WHALEN
HVAC TENDER HOUSE BASEMENT LAYOUT	SHEET 134 OF 172

UNIT HEATER SCHEDULE

MARK	SERVES	CFM	E.A.T. (DEG F)	L.A.T. (DEG F)	HEATING OUTPUT (BTUH)	ELECTRICAL DATA KW	VOLTS	PH	HZ	AMPS	MOUNTING HEIGHT (FT)	THROW (FT)	BASIS OF DESIGN	REMARKS		
UH-1	ELECTRICAL ROOM	350	70	97	10,200	3	208	1	60	14.5	8	12	QMARK MUH-03	1	2	
UH-2	ELECTRICAL ROOM	350	70	97	10,200	3	208	1	60	14.5	8	12	QMARK MUH-03	1	2	
UH-3	MECHANICAL ROOM	350	70	97	10,200	3	208	1	60	14.5	8	12	QMARK MUH-03	1	2	
UH-4	MECHANICAL ROOM	350	70	97	10,200	3	208	1	60	14.5	8	12	QMARK MUH-03	1	2	
UH-5	GENERATOR ROOM	350	70	97	10,200	3	208	1	60	14.5	8	12	QMARK MUH-03	1	2	
UH-6	GENERATOR ROOM	350	70	97	10,200	3	208	1	60	14.5	8	12	QMARK MUH-03	1	2	
UH-7	GENERATOR ROOM	350	70	97	10,200	3	208	1	60	14.5	8	12	QMARK MUH-03	1	2	
UH-8	GENERATOR ROOM	350	70	97	10,200	3	208	1	60	14.5	8	12	QMARK MUH-03	1	2	
UH-9	BATHROOM	-	70	97	1706	0.5	208	1	60	2.4	FLOOR	12	QMARK HBB508	1	2	
UH-10	SUB. CABLE ROOM	350	70	97	10,200	3	208	1	60	14.5	8	12	QMARK MUH-03	1	2	
UH-11	SUB. CABLE ROOM	350	70	97	10,200	3	208	1	60	14.5	8	12	QMARK MUH-03	1	2	
UH-12	SUMP PUMP ROOM	350	70	97	10,200	3	208	1	60	14.5	8	12	QMARK MUH-03	1	2	
UH-13	SUMP PUMP ROOM	350	70	97	10,200	3	208	1	60	14.5	8	12	QMARK MUH-03	1	2	

REMARKS
1. ELECTRIC UNIT HEATER W/EPOXY COATED CABINET, FACTORY DISCONNECT, LINE VOLTAGE CONTROL, ADJUSTABLE ALUMINUM LOUVERS, AND HIGH LIMIT RESET.
2. APPROVED EQUAL MANUFACTURERS: TRANE, CHROMALOX

HEAT PUMP UNIT SCHEDULE

MARK	LOCATION	NOMINAL TON	TOTAL AIRFLOW (CFM)	COOLING DATA TOTAL CAP. MBH	SENS. CAP. MBH	E.A.T. DB/WB (°F)	KW INPUT	MIN. EER	HEATING DATA TOTAL CAP. MBH	KW INPUT	MIN. COP	ELECTRICAL DATA VOLT	PH	HZ	BASIS OF DESIGN	REMARKS		
HP-1	CONTROL HOUSE	2.5	705	30.0	12.0	95/75	3.76	8.0	32.0	3.21	12.0	208/230	1	60	MITSUBISHI PUZ-HA36NHA4	1	2	3

REMARKS
1. MOUNTING BASE. MOUNTING PAD.
2. INDOOR UNIT RECEIVES POWER FROM OUTDOOR UNIT THROUGH FIELD SUPPLIED INTERCONNECT WIRING.
3. UNIT SHALL MEET ITS RATED HEATING CAPACITY AT A 0°F OUTDOOR AIR TEMPERATURE.

FAN COIL UNIT SCHEDULE

MARK	LOCATION	TYPE	CFM	COIL DATA MEDIA	TC (MBH)	SC (MBH)	AIR ON DB	AIR ON WB	AIR OFF DB	AIR OFF WB	HEATING (MBH)	MOTOR DATA VOLT	PH	HZ	BASIS OF DESIGN	REMARKS			
FC-1	CONTROL HOUSE	CEILING MOUNTED	570-640-740	R-410A	30.0	12.0	80	67	55	55	32.0	208/230	1	60	MITSUBISHI PLA-A30BA4	1	2	3	4

REMARKS
1. WALL MOUNTED CONTROLLER.
2. INDOOR UNIT RECEIVES POWER FROM OUTDOOR UNIT THROUGH FIELD SUPPLIED INTERCONNECT WIRING.
3. HIGH EFFICIENCY FILTER.
4 OUTSIDE AIR KIT.

UNIT HEATER SEQUENCE OF OPERATIONS
1. ALL UNIT HEATERS SHALL TURN ON IN THE EVENT THE TEMPERATURE IN THE ROOM DROPS BELOW 55 DEGREES.

PRELIMINARY PLANS

HDR

PROJECT NAME: NORTH HERO GRAND ISLE BRIDGE
PROJECT NUMBER: BHF 028-1(26)

FILE NAME: zl2bl42hvacsch.dgn
PROJECT LEADER: T. FRENCH
DESIGNED BY: A. LEM
HVAC SCHEDULE

PLOT DATE: 10/7/2016
DRAWN BY: A. LEM
CHECKED BY: M. WHALEN
SHEET 135 OF 172

EXHAUST FAN SCHEDULE

MARK	SERVES	FAN DATA					ELECTRICAL					BASIS OF DESIGN	REMARKS			
		TYPE	CFM	EXT. S.P. (IN. W.G.)	OPENING (IN.)	DRIVE	RPM	HP	VOLTS	PH	HZ					
EF-1	ELECTRICAL ROOM	WALL MOUNT EXHAUST FAN	1820	0.10	21-1/4"x21-1/4"	DIRECT	1300	1/4	115	1	60	COOK 14XP32D132	1	2	3	
EF-2	BATHROOM	CEILING MOUNT EXHAUST FAN	80	0.125	6" DIA	DIRECT	750	1/8	115	1	60	COOK GC-128	1	2	4	
EF-3	MECHANICAL ROOM	CEILING MOUNT EXHAUST FAN	140	0.125	6" DIA	DIRECT	1075	1/4	115	1	60	COOK GC-148	1	2	4	
EF-4	SUB. CABLE ROOM	CEILING MOUNT EXHAUST FAN	140	0.125	6" DIA	DIRECT	1075	1/4	115	1	60	COOK GC-148	1	2	4	
EF-5	SUMP PUMP ROOM	INLINE EXHAUST FAN	285	0.25	15"x15"	BELT	1577	1/4	115	1	60	COOK BSQ 70-4	1	2	4	

REMARKS
1. FURNISH AND INSTALL FAN WITH DAMPER AND WITH CORRESPONDING WALL LOUVER.
2. APPROVED EQUAL MANUFACTURERS: GREENHECK, PENN BARRY.
3. WALL MOUNT BRACKET.
4. SUSPEND FROM CEILING.

LOUVER SCHEDULE

MARK	SERVES	AIR FLOW CFM	SIZE (L×H) IN.	MAXIMUM PERMITTED VELOCITY (FPM)	REMARKS			
LV-1	INTAKE ELECTRICAL ROOM	1820	36×24	500	1	2	3	
LV-2	EXHAUST BATHROOM	80	12×12	500	1	2	3	
LV-3	EXHAUST ELECTRICAL ROOM	1820	36×24	500	1	2	3	
LV-4	INTAKE MECHANICAL ROOM	140	12×12	500	1	2	3	
LV-5	EXHAUST MECHANICAL ROOM	140	12×12	500	1	2	3	
LV-6	EXHAUST GENERATOR	12400	60×72	500	1	2	3	
LV-7	INTAKE GENERATOR	12400	60×72	500	1	2	3	
LV-8	OUTSIDE AIR CONTROL ROOM	-	12×12	500	1	2	3	
LV-9	INTAKE SUB. CABLE ROOM	140	12×12	500	1	2	3	
LV-10	EXHAUST SUB. CABLE ROOM	140	12×12	500	1	2	3	
LV-11	INTAKE SUMP PUMP ROOM	142.5	12×12	500	1	2	3	
LV-12	INTAKE SUMP PUMP ROOM	142.5	12×12	500	1	2	3	
LV-13	EXHAUST SUMP PUMP ROOM	285	12×12	500	1	2	3	

REMARKS
1. FOR INFORMATION ONLY. LOUVER SIZES ARE SHOWN ON ARCHITECTURAL CONTRACT DRAWING. THIS TABLE IS FOR AIR FLOW SIZING AND MAXIMUM PERMITTED VELOCITIES THROUGH THE LOUVER FACE. VELOCITY AT SPECIFIED AIRFLOWS SHALL BE INCLUDED AS PART OF THE SUBMITTAL PROVING NO WATER PENETRATION. REFER TO THE ARCHITECTURAL CONTRACT DRAWINGS FOR LOCATIONS.
2. SEE THE ARCHITECTURAL CONTRACT DRAWINGS FOR COLOR.
3. FURNISH AND INSTALL WITH DAMPER AND BIRD SCREEN.

EXHAUST FAN SEQUENCE OF OPERATIONS
1. EXHAUST FANS EF-1, EF-3, EF-4 AND EF-5 SHALL TURN ON WHEN THE TEMERATURE IN THE ROOM REACHES ABOVE 90 DEGREES.
2. EXHAUST FAN EF-2 SHALL TURN ON WITH THE BATHROOM LIGHT.

PRELIMINARY PLANS

HDR

PROJECT NAME: NORTH HERO GRAND ISLE BRIDGE
PROJECT NUMBER: BHF 028-1(26)

FILE NAME: z12b142hvacsch2.dgn
PROJECT LEADER: T. FRENCH
DESIGNED BY: A. LEM
HVAC SCHEDULE 2

PLOT DATE: 10/7/2016
DRAWN BY: A. LEM
CHECKED BY: M. WHALEN
SHEET 136 OF 172

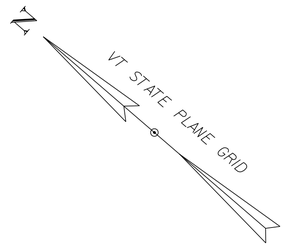

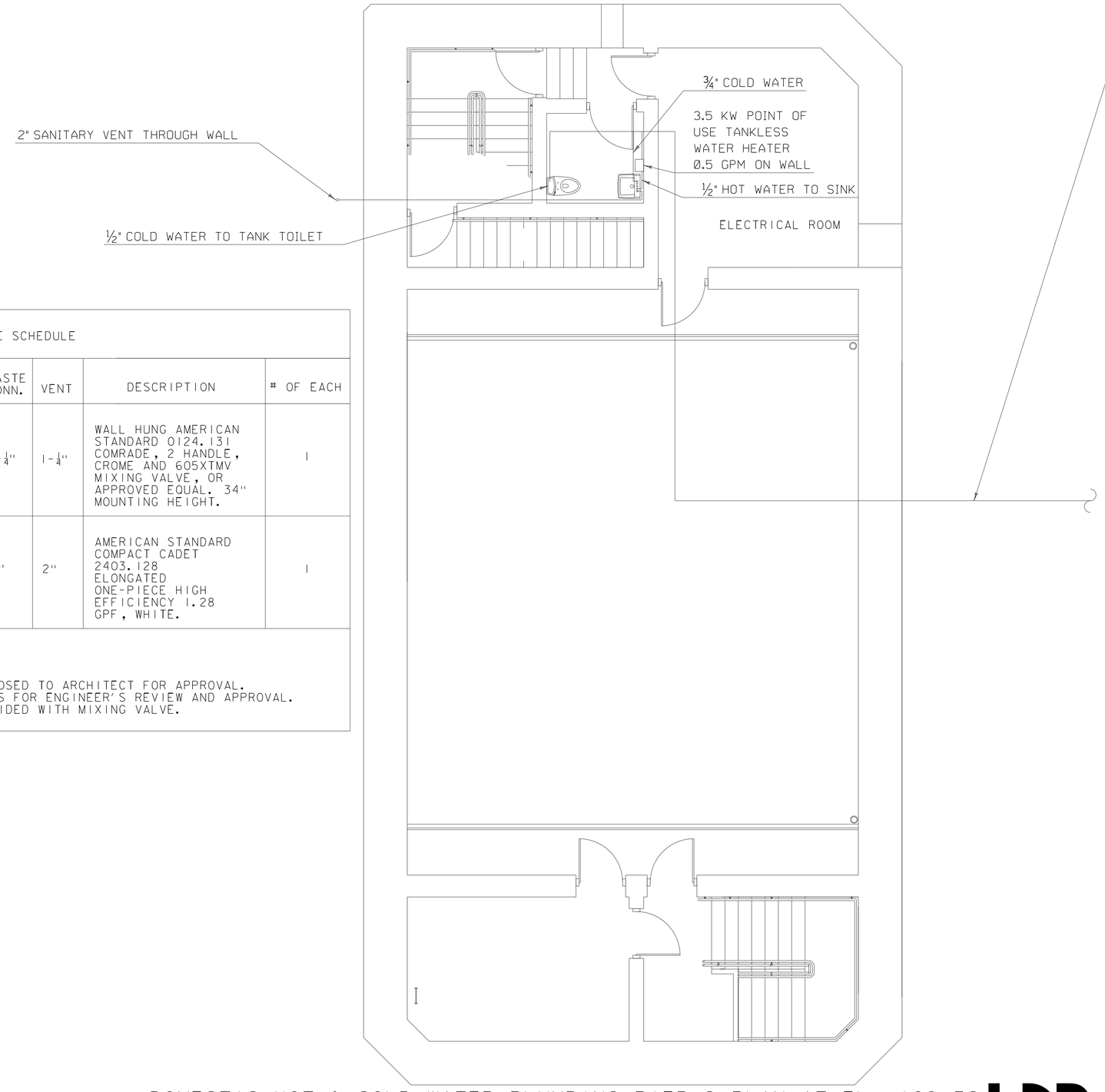

FIXTURE SCHEDULE							
FIXTURE	MARK	HW CONN.	CW CONN.	WASTE CONN.	VENT	DESCRIPTION	# OF EACH
LAVATORY	LAV	½"	½"	1-¼"	1-¼"	WALL HUNG AMERICAN STANDARD 0124.131 COMRADE, 2 HANDLE, CROME AND 605XTMV MIXING VALVE, OR APPROVED EQUAL. 34" MOUNTING HEIGHT.	1
WATER CLOSET	WC	-	½"	4"	2"	AMERICAN STANDARD COMPACT CADET 2403.128 ELONGATED ONE-PIECE HIGH EFFICIENCY 1.28 GPF, WHITE.	1

REMARKS

1. SUBMIT ALL CUT SHEETS OF PROPOSED TO ARCHITECT FOR APPROVAL.
2. SUBMIT EQUALS OR SUBSTITUTIONS FOR ENGINEER'S REVIEW AND APPROVAL.
3. ALL LAVATORY SINKS TO BE PROVIDED WITH MIXING VALVE.

DOMESTIC HOT WATER HEATER SCHEDULE	
MARK NO.	DWH-1
TEMP RISE F°	100.0
EWT F°	40
LWT F°	140
VOLTAGE	120
PHASE	1
FUEL	ELECTRIC
INPUT (kW)	1.5
TYPE	POINT-OF-USE
RECOVERY PER HOUR	7.0
DELIVERY REQUIRED	2.0
MINIMUM ACTIVATION FLOW	.40 GPM
GPM AT TEMP. RISE	3.8
AMP	2
CONNECTIONS	½"
NOTES	1,2,3
MANUF.	A.O. SMITH
MODEL	EJC-2

EQUAL MANUF.

TAKAGI
PALOMA
APPROVED EQUAL

NOTES

1. UNIT REQUIRED P&T RELIEF VALVE
2. ASME CONSTRUCTION
3. DIELECTRIC UNIONS

PRELIMINARY PLANS

DOMESTIC HOT & COLD WATER PLUMBING PIER 2 PLAN AT EL. 108.32

SCALE ¼" = 1'-0"
4' 0 4'

HDR

PROJECT NAME: NORTH HERO GRAND ISLE BRIDGE
PROJECT NUMBER: BHF 028-1(26)

FILE NAME: z12b142p2plumbinglevel1.dgn
PROJECT LEADER: T. FRENCH
DESIGNED BY: A. LEM
PLUMBING PIER 2 PLAN AT EL.108.32

PLOT DATE: 10/7/2016
DRAWN BY: A. LEM
CHECKED BY: M. WHALEN
SHEET 137 OF 172

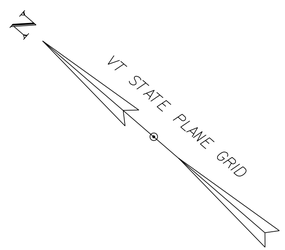

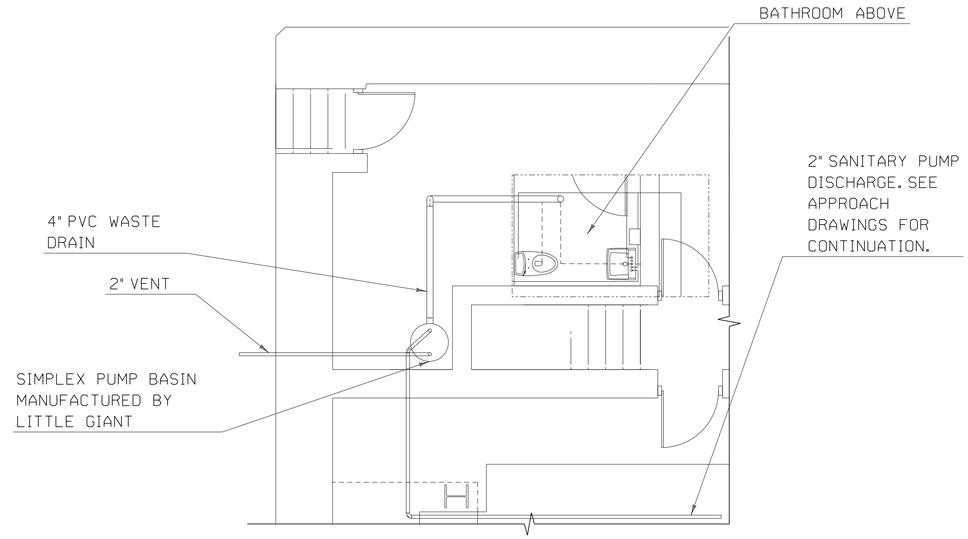

SUBMERSIBLE SEWAGE PUMP SCHEDULE	
MARK NO.	SP-1
SERVING	BATHROOM
MANUFACTURER	LITTLE GIANT
MODEL	10SF2V2DA3
GALLONS PER MINUTE	20
FT HEAD PRESSURE	22
HORSEPOWER	½ HP
VOLTAGE	115
NO. OF PUMPS	1
DISCHARGE SIZE	2" DIA
NOTES	1

EQUAL MANUF.

GOULDS
APPROVED EQUAL

NOTES

1. OUTFIT WITH MANUFACTURER FLOAT KIT AND REQUIRED CONTROL UNIT.

PRELIMINARY PLANS

SANITARY PLUMBING PIER 2 PLAN AT EL. 99.80

SCALE ¼" = 1'-0"
4' 0 4'

HDR

PROJECT NAME: NORTH HERO GRAND ISLE BRIDGE
PROJECT NUMBER: BHF 028-1(26)

FILE NAME: z12b142P2plumbinglevel2.dgn
PROJECT LEADER: T. FRENCH
DESIGNED BY: A. LEM
PLUMBING PIER 2 PLAN AT EL.98.99

PLOT DATE: 10/7/2016
DRAWN BY: A. LEM
CHECKED BY: M. WHALEN
SHEET 138 OF 172

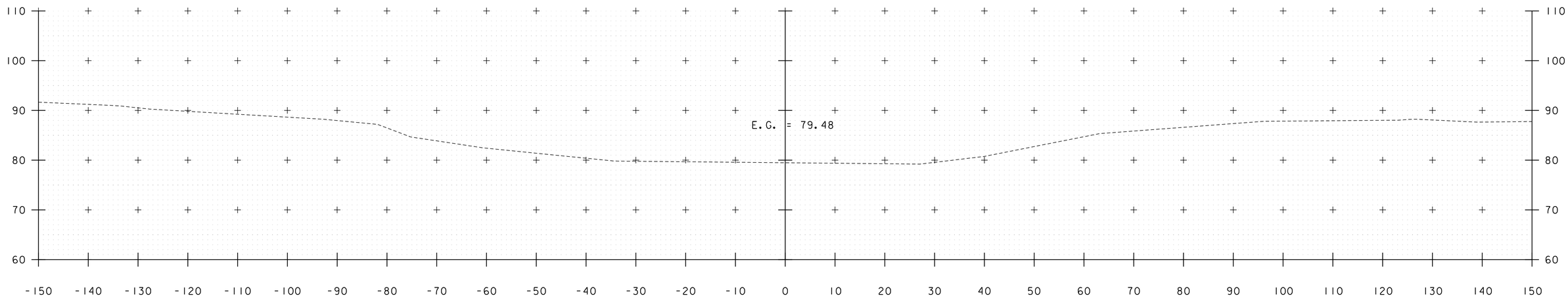

0+25

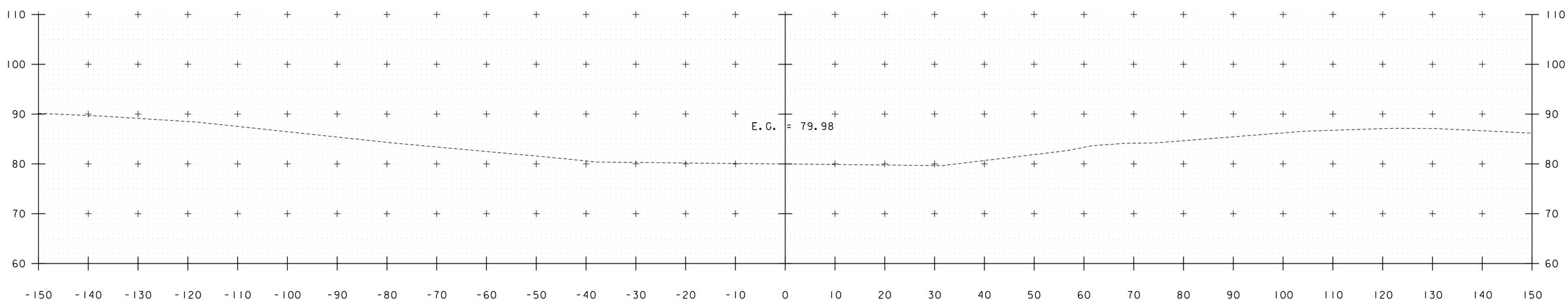

0+00

PRELIMINARY PLANS

PROJECT NAME:	NORTH HERO GRAND ISLE BRIDGE
PROJECT NUMBER:	BHF 028-1(26)

FILE NAME: zl2bl42xcchanl.dgn	PLOT DATE: 10/7/2016
PROJECT LEADER: T. FRENCH	DRAWN BY: P LEFEBVRE
DESIGNED BY:	CHECKED BY: M MOZER
CHANNEL CROSS SECTIONS 1	SHEET 139 OF 172

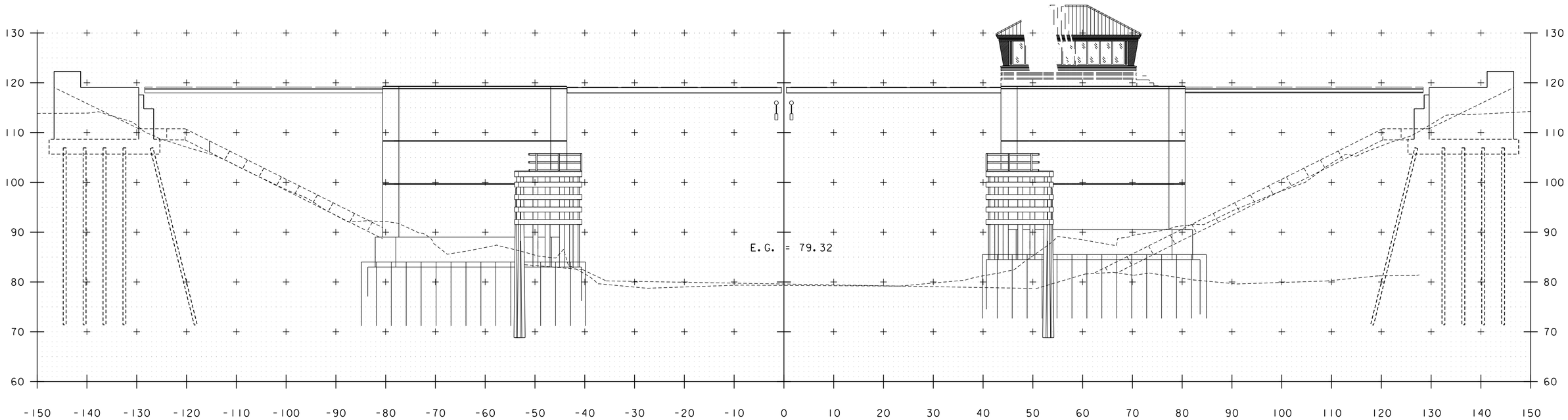

0+75

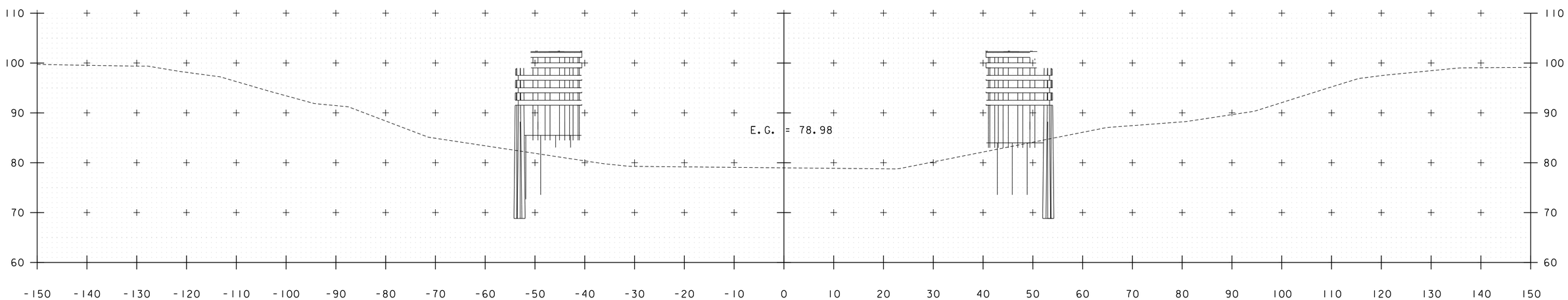

0+50

PRELIMINARY PLANS

PROJECT NAME:	NORTH HERO GRAND ISLE BRIDGE
PROJECT NUMBER:	BHF 028-1(26)

FILE NAME: zl2bl42xcchan2.dgn	PLOT DATE: 10/7/2016
PROJECT LEADER: T. FRENCH	DRAWN BY: P LEFEBVRE
DESIGNED BY:	CHECKED BY: M MOZER
CHANNEL CROSS SECTIONS 2	SHEET 140 OF 172

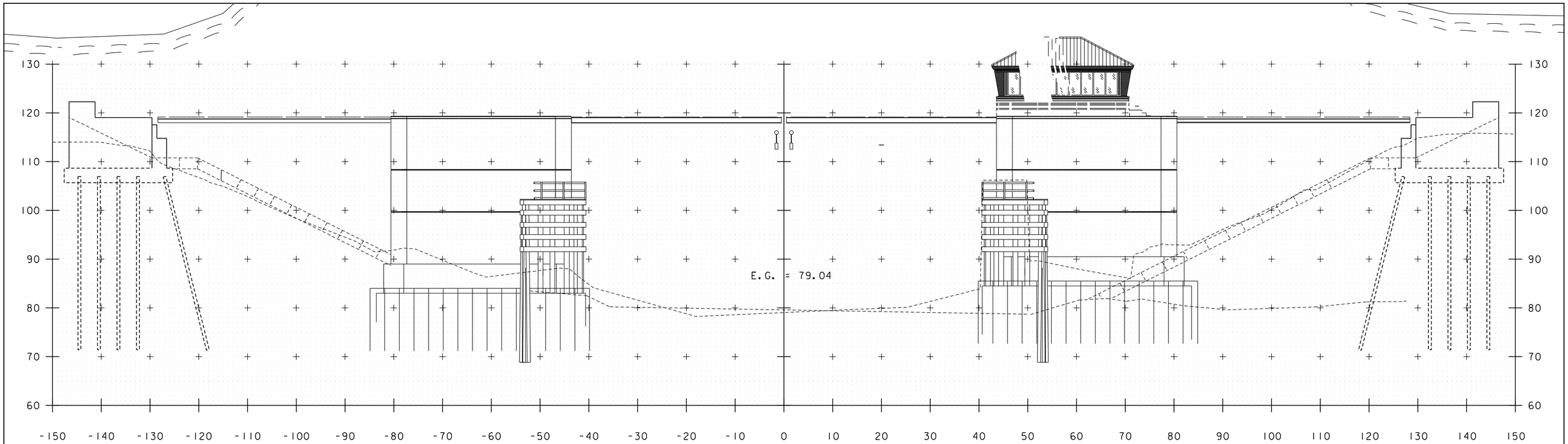

1+25

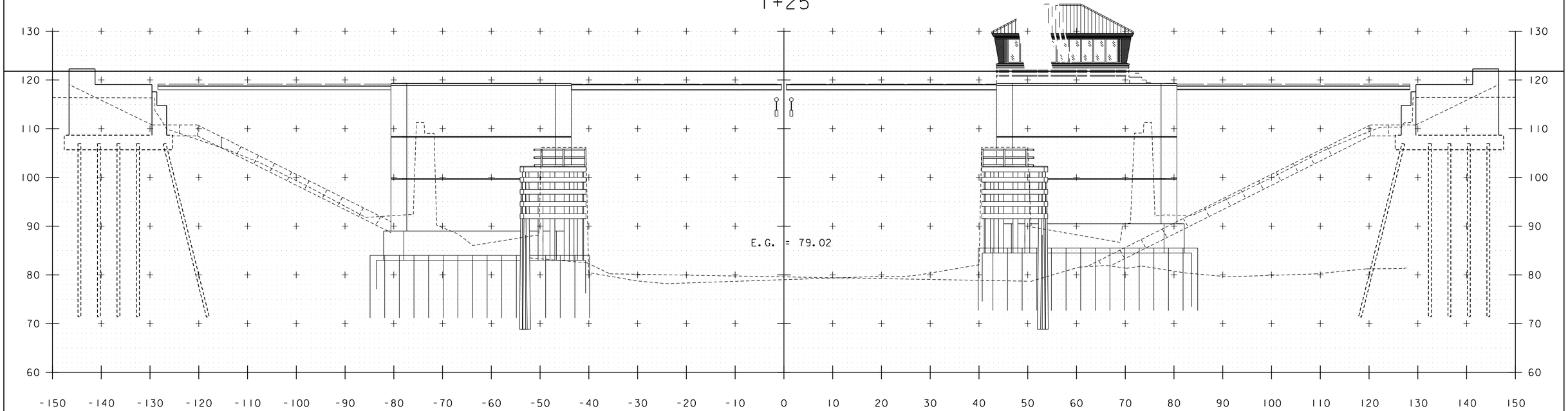

1+00

PRELIMINARY PLANS

PROJECT NAME: NORTH HERO GRAND ISLE BRIDGE	
PROJECT NUMBER: BHF 028-1(26)	
FILE NAME: z12b142xcchan3.dgn	PLOT DATE: 10/7/2016
PROJECT LEADER: T. FRENCH	DRAWN BY: P LEFEBVRE
DESIGNED BY:	CHECKED BY: M MOZER
CHANNEL CROSS SECTIONS 3	SHEET 141 OF 172

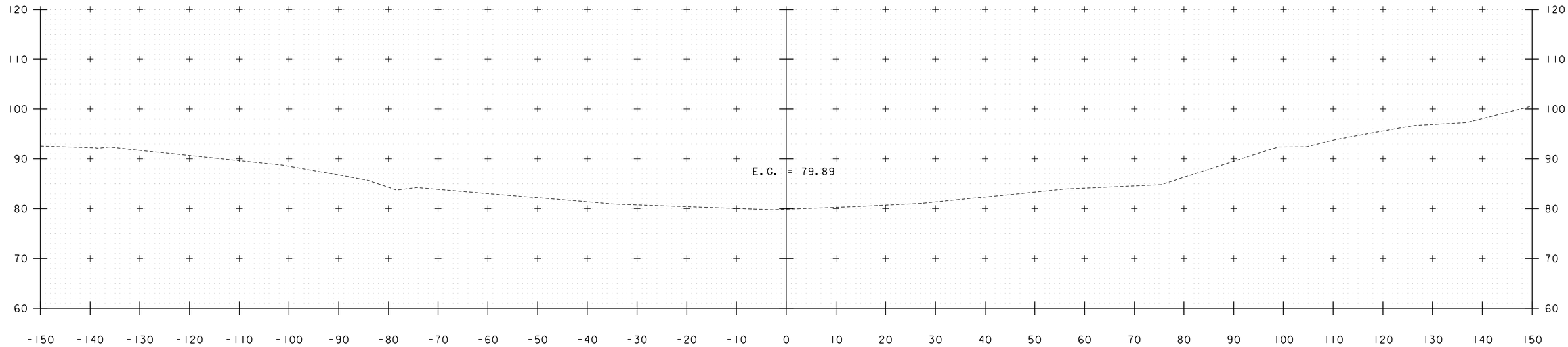

1+75

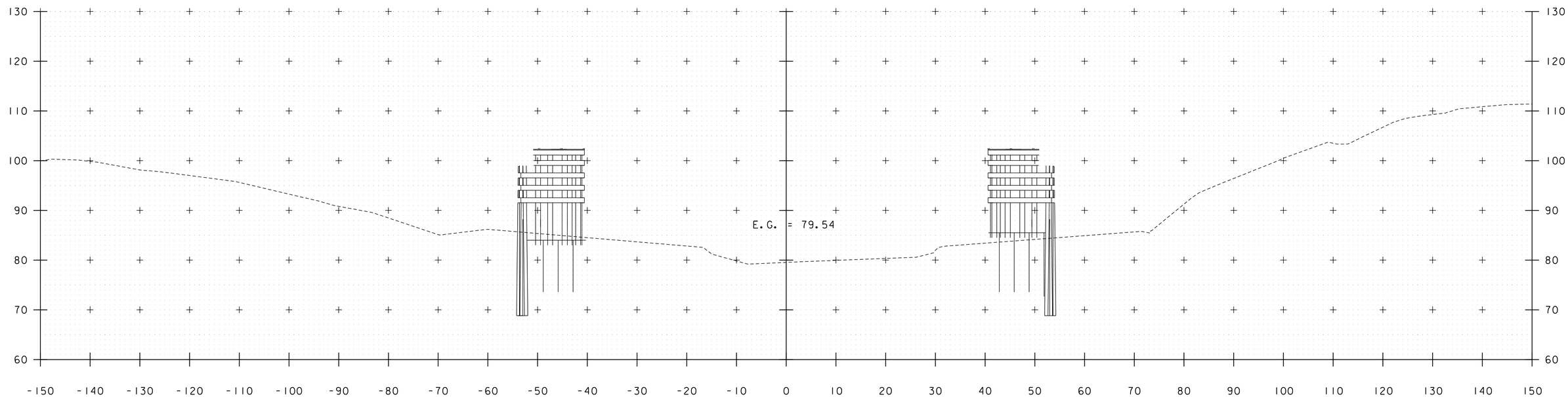

1+50

PRELIMINARY PLANS

PROJECT NAME:	NORTH HERO GRAND ISLE BRIDGE
PROJECT NUMBER:	BHF 028-1(26)

FILE NAME: z12b142xcchan4.dgn	PLOT DATE: 10/7/2016
PROJECT LEADER: T. FRENCH	DRAWN BY: P LEFEBVRE
DESIGNED BY:	CHECKED BY: M MOZER
CHANNEL CROSS SECTIONS 4	SHEET 142 OF 172

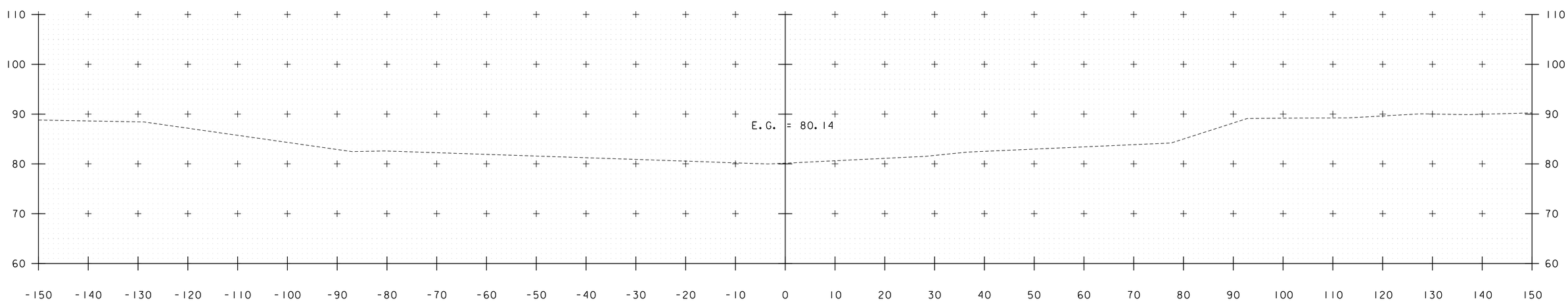

2+00

PRELIMINARY PLANS

PROJECT NAME:	NORTH HERO GRAND ISLE BRIDGE
PROJECT NUMBER:	BHF 028-1(26)

FILE NAME: zl2bl42xcchan5.dgn	PLOT DATE: 10/7/2016
PROJECT LEADER: T. FRENCH	DRAWN BY: P LEFEBVRE
DESIGNED BY:	CHECKED BY: M. MOZER
CHANNEL CROSS SECTIONS 5	SHEET 143 OF 172

EPSC PLAN NARRATIVE

1.1 PROJECT DESCRIPTION

THIS PROJECT INVOLVES THE REPLACEMENT OF BRIDGE 8, A DOUBLE LEAF BASCULE BRIDGE THAT PROVIDES THE ONLY VEHICULAR CONNECTION BETWEEN NORTH HERO AND GRAND ISLE, VT. THE BRIDGE WILL BE REPLACED WITH A TWIN LEAF BASCULE BRIDGE. THE BRIDGE WILL BE ON NEW FOUNDATIONS ALONG THE SAME ALIGNMENT. A SIMILAR AESTHETIC WILL BE MAINTAINED. BRIDGE 8 IS LOCATED BETWEEN THE TOWNS OF NORTH HERO AND GRAND ISLE, ALONG US ROUTE 2, AND CROSSES OVER LAKE CHAMPLAIN.

NOTE: AREA OF DISTURBANCE INCLUDES LIMITS OF EARTH DISTURBANCE WITHIN THE PROJECT AREA, AS WELL AS WASTE, BORROW AND STAGING AREAS, AND OTHER EARTH DISTURBING ACTIVITIES WITHIN OR DIRECTLY ADJACENT TO THE PROJECT LIMITS AS SHOWN ON THE ATTACHED EPSC PLAN.

TOTAL AREA OF DISTURBANCE AS SHOWN ON THE ATTACHED EPSC PLAN IS APPROXIMATELY 2.3 ACRES.

IT IS ANTICIPATED THAT THIS PROJECT WILL LAST FOUR CONSTRUCTION SEASONS.

1.2 SITE INVENTORY

1.2.1 TOPOGRAPHY

THE TOPOGRAPHY OF THE AREA IS A SADDLE THAT IS MOSTLY OPEN AREAS AND BANK WITH SOME WOODED AREAS. US ROUTE 2, LANDING LANE, DRAWBRIDGE LANE, AND TWO PAVED DRIVEWAYS ARE WITHIN THE PROJECT SITE. THERE IS A RESIDENCE ON THE SOUTH SIDE OF THE PROJECT.

1.2.2 DRAINAGE, WATERWAYS, BODIES OF WATER, AND PROXIMITY TO NATURAL OR MAN-MADE WATER FEATURES

LAKE CHAMPLAIN IS THE ONLY WATER SOURCE ON THE PROJECT SITE.

1.2.3 VEGETATION

THE VEGETATION IN THE PROJECT AREA CONSISTS OF DECIDUOUS AND CONIFEROUS TREES, AS WELL AS SOME ADDITIONAL MINOR GROWTH. UPON PROJECT COMPLETION, AREAS OF THE CAUSEWAY WILL BE ARMORED WITH STONE FILL AS SPECIFIED ON THE PLANS. DISTURBED VEGETATION WILL BE REESTABLISHED WITH STANDARD SEED AND MULCH PRACTICES.

1.2.4 SOILS

THE SOIL IN THE PROJECT AREA IS MOSTLY FILL PLACED FOR THE CONSTRUCTION OF THE EXISTING BRIDGE. ALTHOUGH THE SLOPES ARE STEEP, THE SOIL HAS LOW EROSION POTENTIAL. THE NORTHERN MOST AREA CONTAINS COVINGTON SILTY CLAY LOAM, K=0.49. THE SOUTHERN AREA CONTAINS AMENIA SILT LOAM, K=0.37 AND BENSON ROCKY LOAM, K=0.32.

NOTE: K-VALUES GENERALLY INDICATE THE FOLLOWING:
0.0-0.23 = LOW EROSION POTENTIAL
0.24-0.36 = MODERATE EROSION POTENTIAL
0.37 AND HIGHER = HIGH EROSION POTENTIAL

1.2.5 SENSITIVE RESOURCE AREAS
CRITICAL HABITATS: NO
HISTORICAL OR ARCHEOLOGICAL AREAS: YES
PRIME AGRICULTURAL LAND: NO
THREATENED AND ENDANGERED SPECIES: NO
WATER RESOURCE: LAKE CHAMPLAIN
WETLANDS: NO

1.3 RISK EVALUATION

THIS PROJECT FALLS UNDER THE JURISDICTION OF GENERAL PERMIT 3-9020 FOR STORMWATER RUNOFF FROM CONSTRUCTION SITES FOR LOW RISK PROJECTS. ANY MODIFICATIONS TO THE PROJECT THAT INCREASE THE RISK TO ENVIRONMENTAL RESOURCES SHALL BE EVALUATED IN ACCORDANCE WITH THE PERMIT REQUIREMENTS. THE CONTRACTOR WILL BE RESPONSIBLE FOR ANY ADDITIONAL PERMITTING.

1.4 EROSION PREVENTION AND SEDIMENT CONTROL

THE EROSION CONTROL PLANS ARE MEANT AS A GUIDELINE FOR PREVENTING EROSION AND CONTROLLING SEDIMENT TRANSPORT. THE PRINCIPLES OUTLINED IN THIS NARRATIVE CONSIST OF APPLYING MEASURES THROUGHOUT CONSTRUCTION OF THE PROJECT IN ORDER TO MINIMIZE SEDIMENT TRANSPORT TO THE RECEIVING WATERS. THE MEASURES INCLUDE STABILIZATION AND STRUCTURAL PRACTICES, STORM WATER CONTROLS AND OTHER POLLUTION PREVENTION PRACTICES. THEY HAVE BEEN PROPOSED BY THE DESIGNER AS A BASIS FOR PROTECTING RESOURCES AND WILL NEED TO BE BUILT UPON BASED ON THE SPECIFIC MEANS AND METHODS OF THE CONTRACTOR. REFER TO THE LOW RISK SITE HANDBOOK AND APPROPRIATE DETAIL SHEETS FOR SPECIFIC GUIDANCE AND CONSTRUCTION DETAILING.

ALL MEASURES SHALL BE REGULARLY MAINTAINED AND SHALL BE CHECKED FOR SEDIMENT BUILD-UP. SEDIMENT SHALL BE DISPOSED OF AT AN APPROVED SITE WHERE IT WILL NOT BE SUBJECT TO EROSION.

1.4.1 MARK SITE BOUNDARIES
SITE BOUNDARIES AND AREAS CONSTRUCTION EQUIPMENT CAN ACCESS SHALL BE DELINEATED. PROJECT DEMARCATION FENCING (PDF) SHALL BE USED TO PHYSICALLY MARK SITE BOUNDARIES. BECAUSE THIS PROJECT FALLS UNDER THE CGP 3-9020, BARRIER FENCE SHALL BE USED INSTEAD OF PROJECT DEMARCATION FENCE WITHIN 100 FEET OF A WATER RESOURCE (STREAM, BROOK, LAKE, POND, WETLAND, ETC.

1.4.2 LIMIT DISTURBANCE AREA
PREVENTING INITIAL SOIL EROSION BY MINIMIZING THE EXPOSED AREA IS MUCH MORE EFFECTIVE THAN TREATING ERODED SEDIMENT. EARTH DISTURBANCE CAN BE MINIMIZED THROUGH CONSTRUCTION PHASING BY ONLY OPENING UP EARTH AS NECESSARY. THIS CAN LIMIT THE AREA THAT WILL BE DISTURBED AND EXPOSED TO EROSION. EMPLOY TEMPORARY CONSTRUCTION STABILIZATION PRACTICES IN INCREMENTAL STAGES AS PHASES CHANGE. FOR PROJECTS WHICH FALL UNDER THE CONSTRUCTION GENERAL PERMIT, ONLY THE ACREAGE LISTED ON THE PERMIT AUTHORIZATION MAY BE EXPOSED AT ANY GIVEN TIME.

MAINTAINING VEGETATED BUFFERS ALONG STREAM BANKS, WETLANDS OR OTHER SENSITIVE AREAS IS A CRUCIAL EROSION AND SEDIMENT CONTROL MEASURE THAT SHOULD BE ESTABLISHED WHEREVER POSSIBLE.

1.4.3 SITE ENTRANCE/EXIT STABILIZATION
TRACKING OF SEDIMENT ONTO PUBLIC HIGHWAYS SHALL BE MINIMIZED TO REDUCE THE POTENTIAL FOR RUNOFF ENTERING RECEIVING WATERS. INSTALLATION SHALL COINCIDE WITH THE CONTRACTORS PROGRESS SCHEDULE.

STABILIZED CONSTRUCTION ENTRANCES SHALL BE INSTALLED AS PROPOSED ON THE EPSC PLAN AND ANYWHERE EQUIPMENT WILL BE GOING FROM AREAS OF EXPOSED SOILS TO PAVED SURFACES.

1.4.4 INSTALL SEDIMENT BARRIERS
SEDIMENT BARRIERS SHALL BE UTILIZED TO INTERCEPT RUNOFF AND ALLOW SUSPENDED SEDIMENT TO SETTLE OUT. THEY SHALL BE INSTALLED PRIOR TO ANY UP SLOPE WORK.

SILT FENCE WILL BE INSTALLED AS PROPOSED ON THE EPSC PLAN. BECAUSE THIS PROJECT FALLS UNDER THE CGP 3-9020, WOVEN WIRE REINFORCED SILT FENCE SHALL BE USED INSTEAD OF SILT FENCE WITHIN 100 FEET UPSLOPE OF RECEIVING WATERS.

1.4.5 DIVERT UPLAND RUNOFF
DIVERSIONARY MEASURES SHALL BE USED TO INTERCEPT RUNOFF FROM ABOVE THE CONSTRUCTION AND DIRECT IT AROUND THE DISTURBED AREA SO THAT CLEAN WATER DOES NOT BECOME MUDDIED WHILE TRAVELING OVER EXPOSED SOILS ON THE CONSTRUCTION SITE.

1.4.6 SLOW DOWN CHANNELIZED RUNOFF
THIS PROJECT IS NOT EXPECTED TO PRODUCE ANY CHANNELIZED RUNOFF.

1.4.7 CONSTRUCT PERMANENT CONTROLS
THIS PROJECT DOES NOT REQUIRE ANY PERMANENT STORMWATER TREATMENT DEVICES.

1.4.8 STABILIZE EXPOSED SOILS DURING CONSTRUCTION
ALL AREAS OF DISTURBANCE MUST HAVE TEMPORARY STABILIZATION IN PLACE WITHIN 48 HOURS OF DISTURBANCE OR IN ACCORDANCE WITH THE CONSTRUCTION GENERAL PERMIT 3-9020 AUTHORIZATION.

SURFACE ROUGHENING OF ALL EXPOSED SLOPES, COMBINED WITH TEMPORARY MULCHING, SHALL BE UTILIZED ON A REGULAR BASIS. BIODEGRADABLE EROSION CONTROL MATTING OR AN EQUIVALENT SHALL BE USED TO STABILIZE ALL SLOPES STEEPER THAN 1:3.

THE FORECAST OF RAINFALL EVENTS SHALL TRIGGER IMMEDIATE PROTECTION OF EXPOSED SOILS.

1.4.9 WINTER STABILIZATION
IF CONSTRUCTION ACTIVITIES INVOLVING EARTH DISTURBANCE CONTINUE PAST OCTOBER 15 OR BEGIN BEFORE APRIL 15, THE FOLLOWING MUST BE INCORPORATED INTO THE EPSC PLAN:

1. ENLARGED ACCESS POINTS, STABILIZE TO PROVIDE FOR SNOW STOCKPILING.

2. LIMITS OF DISTURBANCE MOVED OR REPLACED TO REFLECT BOUNDARY OF WINTER WORK.

3. A SNOW MANAGEMENT PLAN INCLUDING ADEQUATE STORAGE AND CONTROL OF SNOWMELT, REQUIRING CLEARED SNOW TO BE STORED DOWN GRADIENT OF ALL AREA OF DISTURBANCE AND PROHIBITING STORAGE OF SNOW IN STORMWATER TREATMENT STRUCTURES.

4. A MINIMUM 25 FOOT BUFFER SHALL BE MAINTAINED FROM PERIMETER CONTROLS SUCH AS SILT FENCE TO ALLOW FOR SNOW CLEARING AND MAINTENANCE.

5. IN AREAS OF DISTURBANCE WITHIN 100 FEET OF A RECEIVING WATER, SILT FENCE SHALL BE REINFORCED OR ELSE REPLACED WITH PERIMETER DIKES, SWALES, OR OTHER PRACTICES RESISTANT TO THE FORCES OF SNOW LOADS.

6. DRAINAGE STRUCTURES SHALL BE KEPT OPEN AND FREE OF SNOW AND ICE DAMS.

7. THE CONTRACTOR SHALL INSTALL SILT FENCE AND OTHER PRACTICES REQUIRING EARTH DISTURBANCE AHEAD OF GROUND FREEZING.

8. WHERE MULCH IS THE SELECTED STABILIZATION MEASURE, USE DOUBLE THE STANDARD RATE OF MULCH.

9. THE REQUIREMENT FOR NETTING OR OTHER APPROACH TO ANCHOR MULCH TO PREVENT REMOVAL BY WIND.

10. TO ENSURE COVER OF DISTURBED SOIL IN ADVANCE OF A MELT EVENT, AREAS OF DISTURBED SOIL MUST BE STABILIZED AT THE END OF EACH WORK DAY, WITH THE FOLLOWING EXCEPTIONS:
    a. IF NO PRECIPITATION WITHIN 24 HOURS IS FORECAST AND WORK WILL RESUME IN THE SAME DISTURBED AREA WITHIN 24 HOURS, DAILY STABILIZATION IS NOT NECESSARY.
    b. DISTURBED AREAS THAT COLLECT AND RETAIN RUNOFF, SUCH AS HOUSE FOUNDATIONS OR OPEN UTILITY TRENCHES.

11. REMOVE SNOW OR ICE TO LESS THAN 1 INCH THICKNESS PRIOR TO STABILIZATION.

1.4.10 STABILIZE SOIL AT FINAL GRADE
EXPOSED SOIL MUST BE STABILIZED WITHIN 48 HOURS OF REACHING FINAL GRADE.

SEED, MULCH, FERTILIZER AND LIME SHALL BE USED TO ESTABLISH PERMANENT VEGETATION. FOR SLOPES STEEPER THAN 1:3, BIODEGRADABLE EROSION CONTROL MATTING OR AN EQUIVALENT SHALL BE USED INSTEAD OF MULCH.

1.4.11 DE-WATERING ACTIVITIES
DISCHARGE FROM DEWATERING ACTIVITIES THAT FLOWS OFF OF THE CONSTRUCTION SITE MUST NOT CAUSE OR CONTRIBUTE TO A VIOLATION OF THE VERMONT WATER QUALITY STANDARDS.

TREATMENT OF DEWATERING COFFERDAM IS ANTICIPATED. FILTER BAGS SHALL BE USED FOR TREATMENT OF DISCHARGE DURING DEWATERING OPERATIONS. LOCATIONS FOR TREATMENT HAVE BEEN PROPOSED AND ARE SHOWN ON THE PLANS.

1.4.12 INSPECT YOUR SITE
INSPECT THE PROJECT SITE BASED ON SPECIAL PROVISION REQUIREMENTS OR CONSTRUCTION GENERAL PERMIT AUTHORIZATION STIPULATIONS.

1.5 SEQUENCE AND STAGING

THIS SECTION WILL BE DEVELOPED BY THE CONTRACTOR USING THE GUIDANCE OUTLINED IN THE VTRANS EPSC PLAN CONTRACTOR CHECKLIST.

1.5.1 CONSTRUCTION SEQUENCE

1.5.2 OFF-SITE ACTIVITIES
IN ADDITION TO THE CONTRACTOR CHECKLIST ANY ACTIVITIES OUTSIDE THE CONSTRUCTION LIMITS SHALL FOLLOW SPECIFICATION 105.25- 105.29 OF THE STANDARD SPECIFICATIONS FOR CONSTRUCTION.

1.5.3 UPDATES

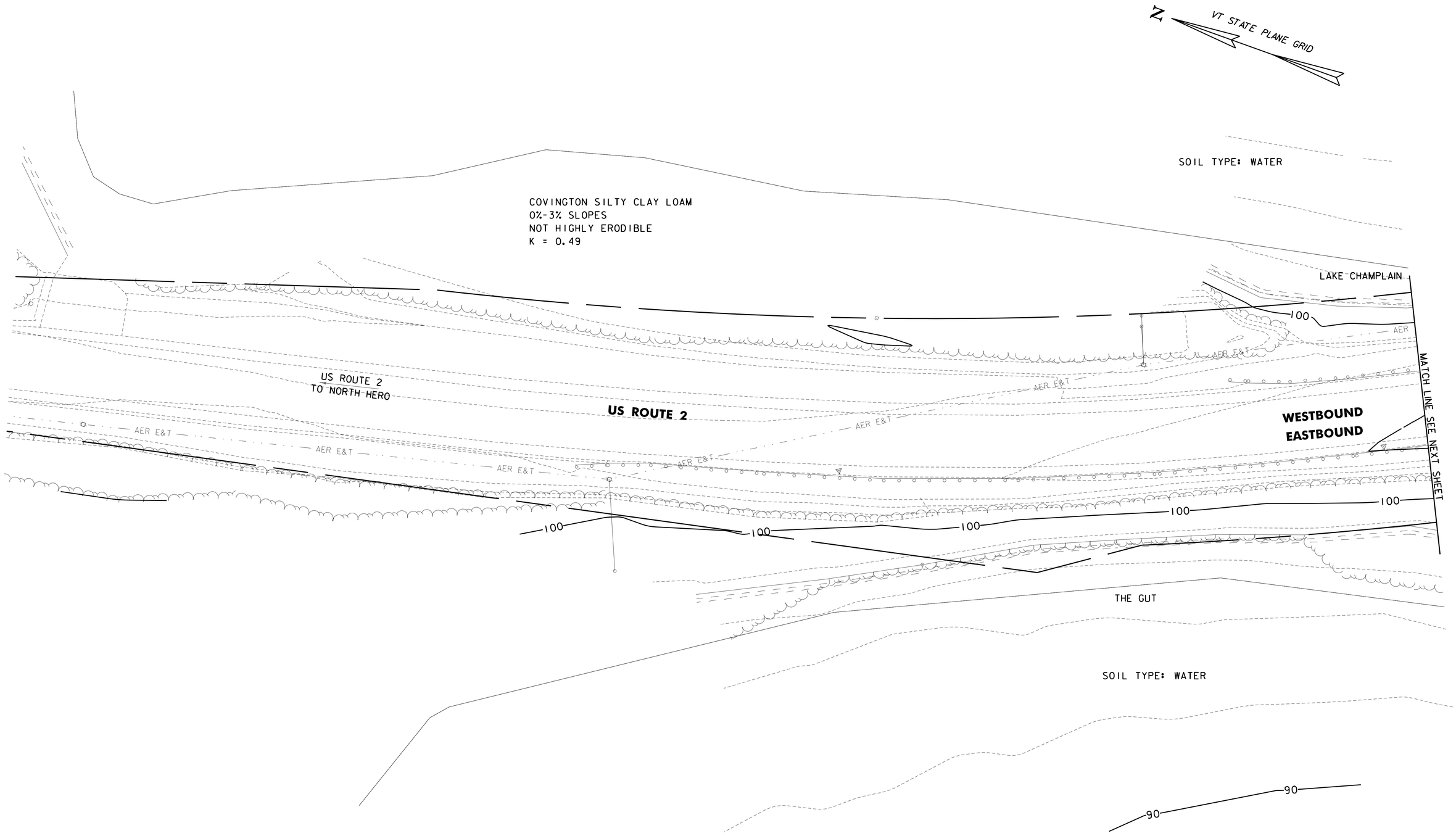

SCALE 1" = 20'-0"
20 0 20

CHA

PROJECT NAME: NORTH HERO GRAND ISLE BRIDGE	
PROJECT NUMBER: BHF 028-1(26)	
FILE NAME: z12b142erobdr_ex.dgn	PLOT DATE: 10/7/2016
PROJECT LEADER: D. GOZALKOWSKI	DRAWN BY: A. KIRBY
DESIGNED BY: J. PARRELLI	CHECKED BY: J. SHIELDS
EPSC EXISTING SITE PLAN SHEET 1	SHEET 145 OF 172

FILE NAME = V:\Projects\ANYX3\28173\CADD_MSTN\12b142\Consultants\z12b142erobdr_ex.dgn
DATE/TIME = 10/7/2016
USER = 3724

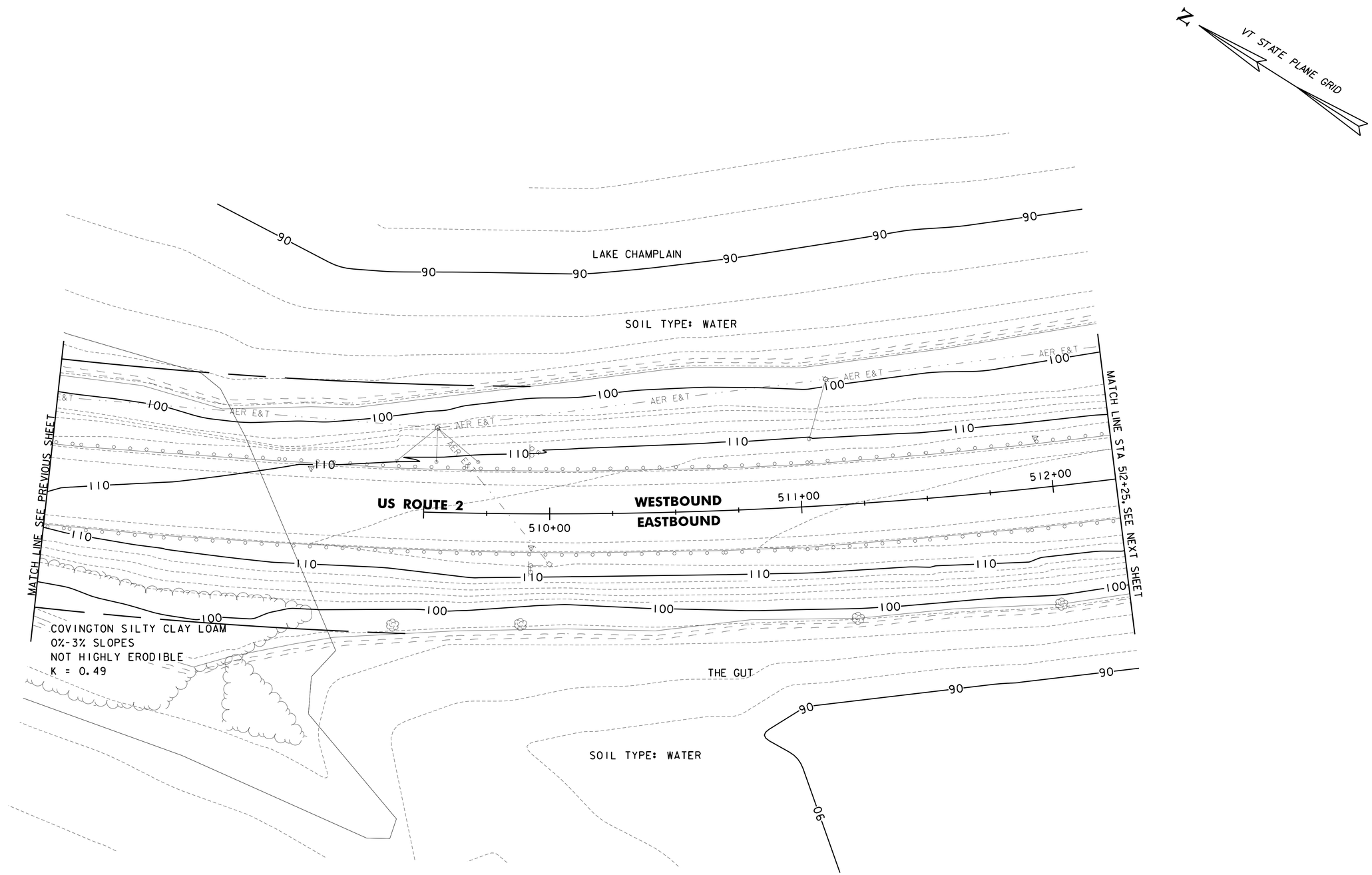

SCALE 1" = 20'-0"
20 0 20

CHA

PROJECT NAME: NORTH HERO GRAND ISLE BRIDGE	
PROJECT NUMBER: BHF 028-1(26)	
FILE NAME: z12b142erobdr_ex.dgn	PLOT DATE: 10/7/2016
PROJECT LEADER: D. GOZALKOWSKI	DRAWN BY: A. KIRBY
DESIGNED BY: J. PARRELLI	CHECKED BY: J. SHIELDS
EPSC EXISTING SITE PLAN SHEET 2	SHEET 146 OF 172

FILE NAME = V:\Projects\ANY\K3\28173\CADD_MSTN\12b142\Consultants\z12b142erobdr_ex.dgn
DATE/TIME = 10/7/2016
USER = 3724

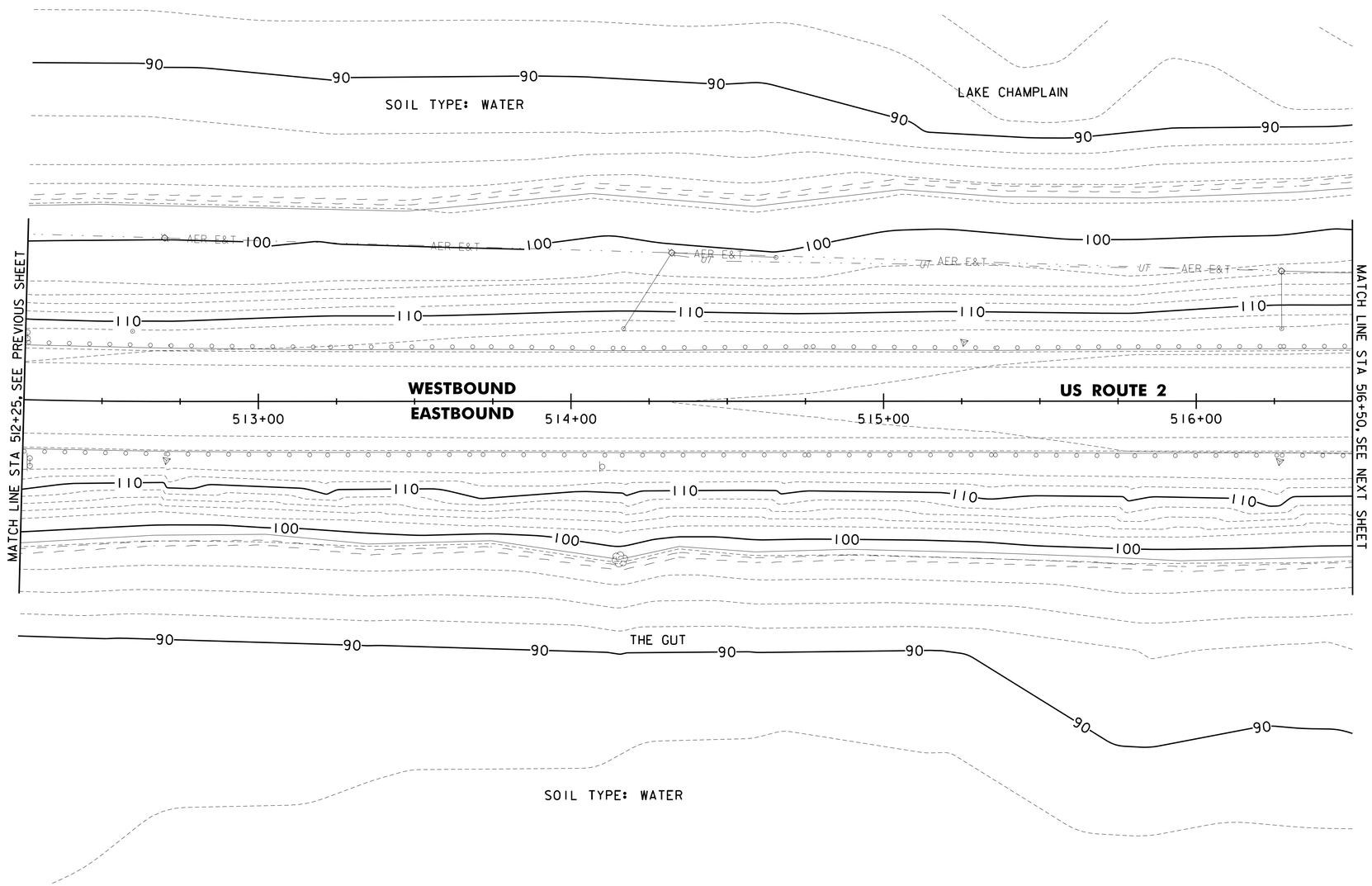

SCALE 1" = 20'-0"
20 0 20

CHA

PROJECT NAME: NORTH HERO GRAND ISLE BRIDGE	
PROJECT NUMBER: BHF 028-1(26)	
FILE NAME: z12b142erobdr_ex.dgn	PLOT DATE: 10/7/2016
PROJECT LEADER: D. GOZALKOWSKI	DRAWN BY: A. KIRBY
DESIGNED BY: J. PARRELLI	CHECKED BY: J. SHIELDS
EPSC EXISTING SITE PLAN SHEET 3	SHEET 147 OF 172

FILE NAME = V:\Projects\ANY\K3\28173\CADD_MSTN\12b142\Consultants\z12b142erobdr_ex.dgn
DATE/TIME = 10/7/2016
USER = 3724

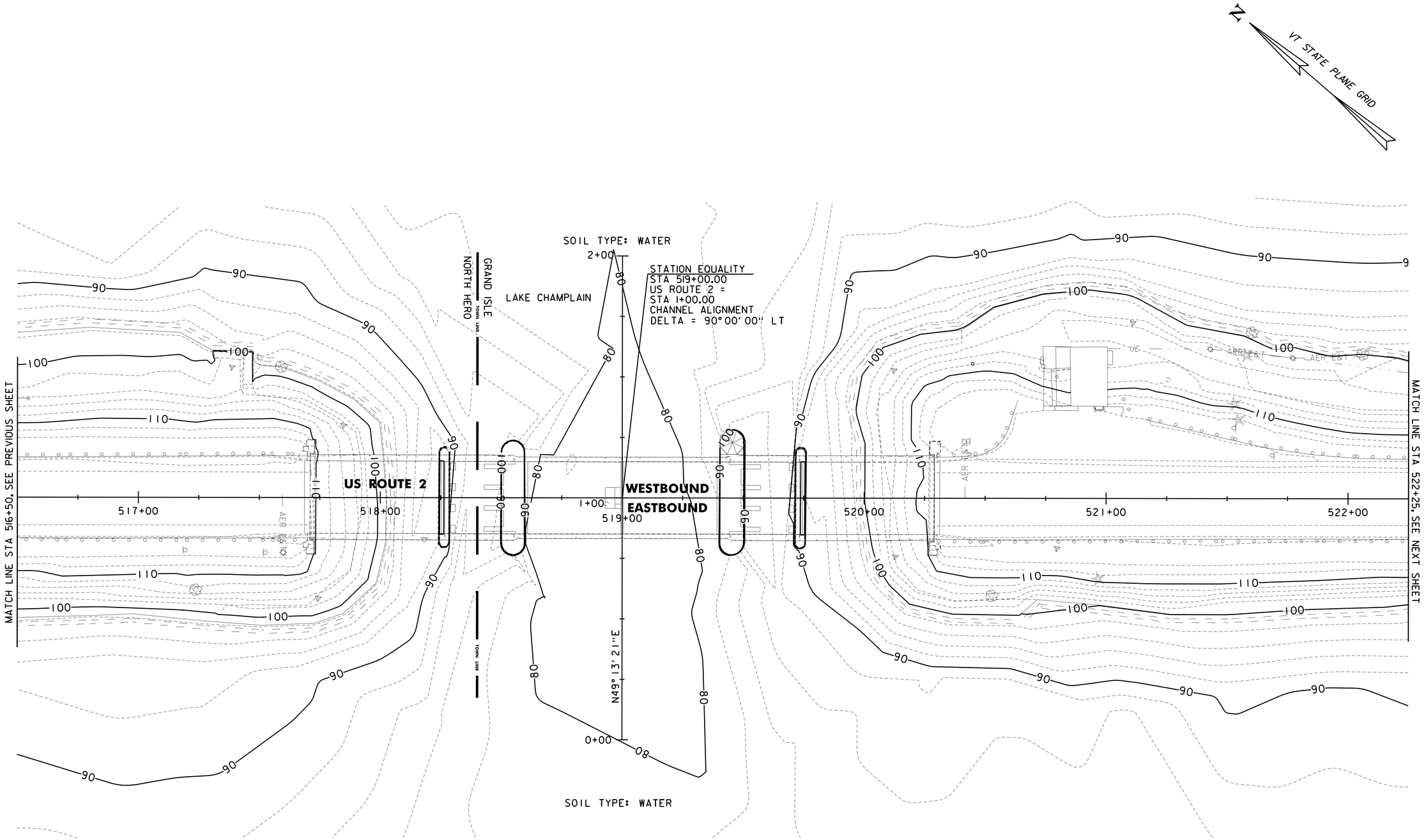

SCALE 1" = 20'-0"
20 0 20

CHA

PROJECT NAME: NORTH HERO GRAND ISLE BRIDGE	
PROJECT NUMBER: BHF 028-1(26)	
FILE NAME: z12b142erobdr_ex.dgn	PLOT DATE: 10/7/2016
PROJECT LEADER: D. GOZALKOWSKI	DRAWN BY: A. KIRBY
DESIGNED BY: J. PARRELLI	CHECKED BY: J. SHIELDS
EPSC EXISTING SITE PLAN SHEET 4	SHEET 148 OF 172

FILE NAME = V:\Projects\ANY\K3\28173\CADD_MSTN\12b142\Consultants\z12b142erobdr_ex.dgn
DATE/TIME = 10/7/2016
USER = 3724

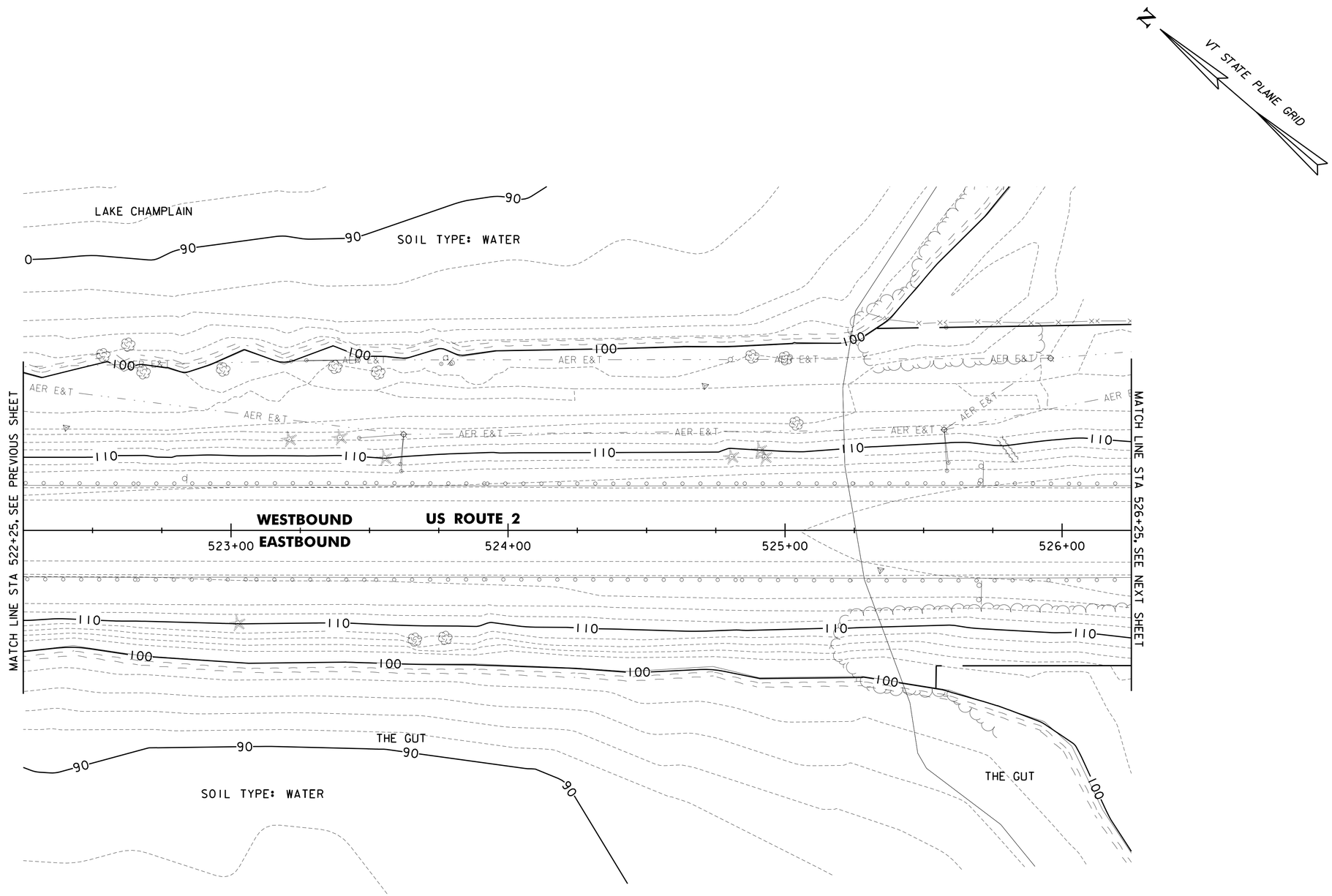

SCALE 1" = 20'-0"
20 0 20

CHA

PROJECT NAME: NORTH HERO GRAND ISLE BRIDGE	
PROJECT NUMBER: BHF 028-1(26)	
FILE NAME: z12b142erobdr_ex.dgn	PLOT DATE: 10/7/2016
PROJECT LEADER: D. GOZALKOWSKI	DRAWN BY: A. KIRBY
DESIGNED BY: J. PARRELLI	CHECKED BY: J. SHIELDS
EPSC EXISTING SITE PLAN SHEET 5	SHEET 149 OF 172

FILE NAME = V:\Projects\ANY\K3\28173\CADD_MSTN\12b142\Consultants\z12b142erobdr_ex.dgn
DATE/TIME = 10/7/2016
USER = 3724

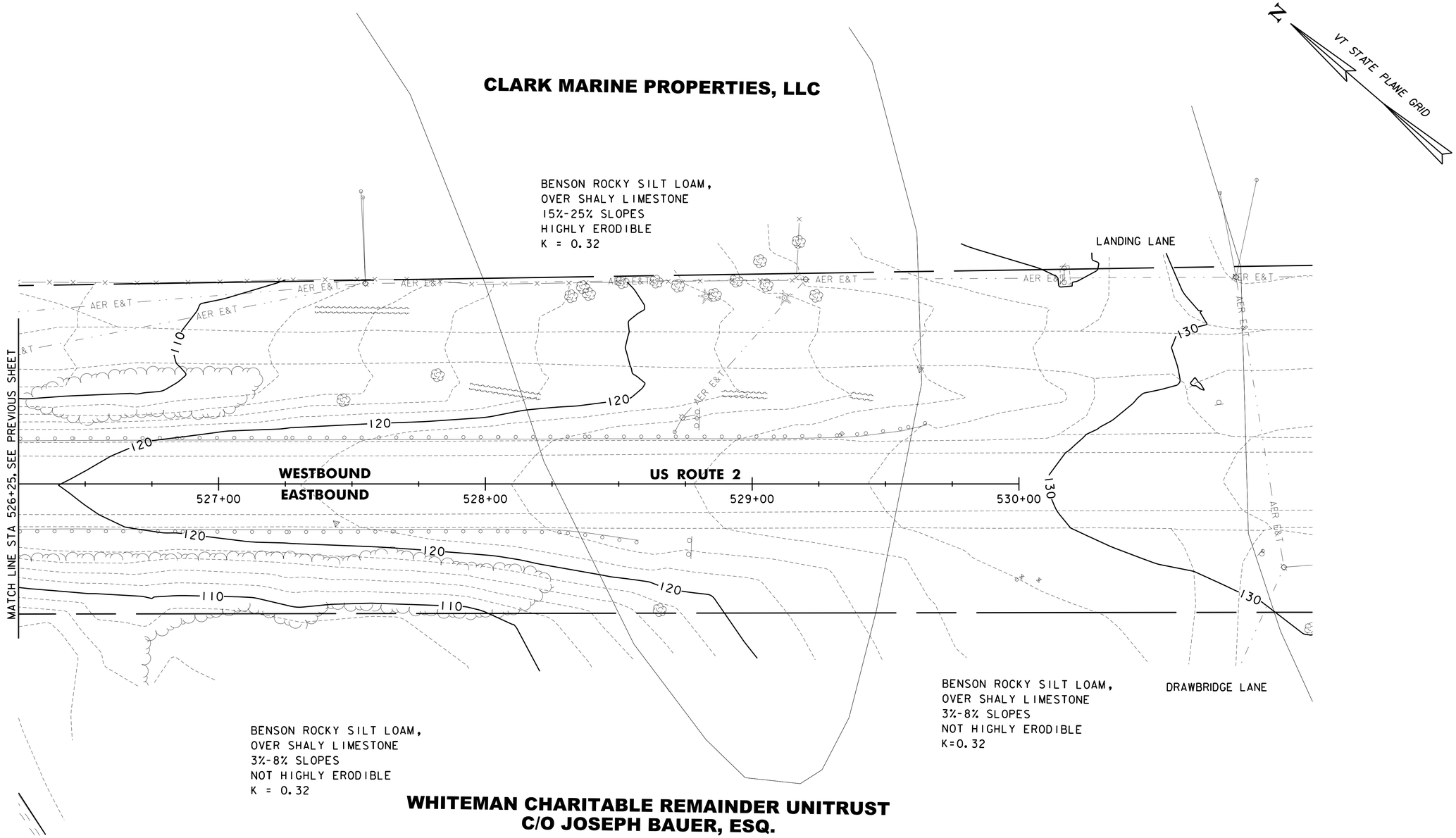

SCALE 1" = 20'-0"
20 0 20

CHA

PROJECT NAME: NORTH HERO GRAND ISLE BRIDGE	
PROJECT NUMBER: BHF 028-1(26)	
FILE NAME: z12b142erobdr_ex.dgn	PLOT DATE: 10/7/2016
PROJECT LEADER: D. GOZALKOWSKI	DRAWN BY: A. KIRBY
DESIGNED BY: J. PARRELLI	CHECKED BY: J. SHIELDS
EPSC EXISTING SITE PLAN SHEET 6	SHEET 150 OF 172

FILE NAME = V:\Projects\ANY\K3\28173\CADD_MSTN\12b142\Consultants\z12b142erobdr_ex.dgn
DATE/TIME = 10/7/2016
USER = 3724

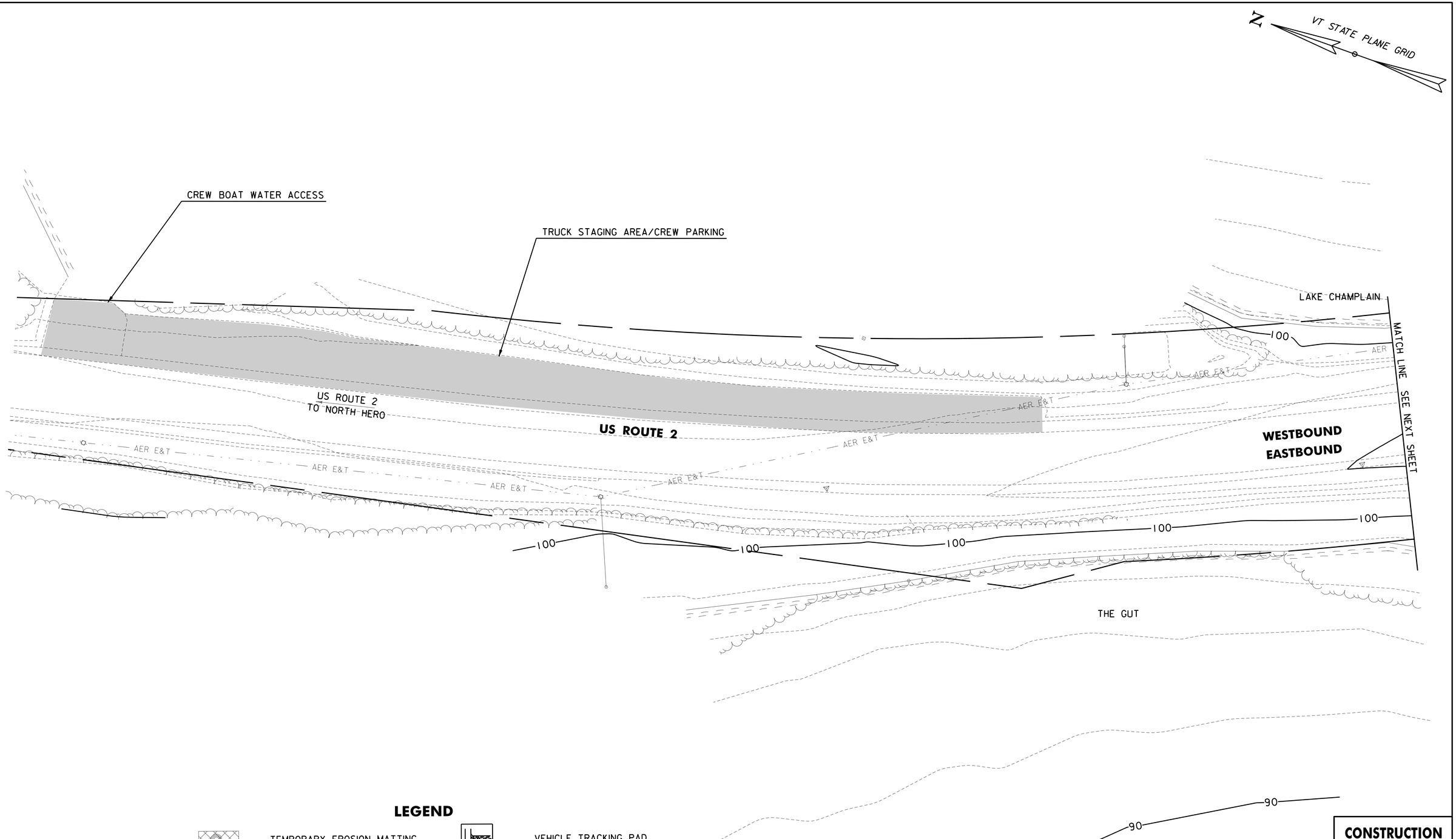

LEGEND

	TEMPORARY EROSION MATTING		VEHICLE TRACKING PAD
	WOVEN WIRE REINFORCED		DEWATERING OPERATION
BF BF	BARRIER FENCE		FILTER BAG
	GEOTEXTILE FOR FILTER CURTAIN		TEMPORARY DETOUR, CONSTRUCTION ACCESS, OR STAGING AREA

SCALE 1" = 20'-0"
20 0 20

CHA

CONSTRUCTION SEQUENCING PHASE 1

PROJECT NAME: NORTH HERO GRAND ISLE BRIDGE
PROJECT NUMBER: BHF 028-1(26)

FILE NAME: zl2bl42erobdr_con.dgn
PROJECT LEADER: D. GOZALKOWSKI
DESIGNED BY: J. PARRELLI
EPSC CONSTRUCTION PLAN SHEET 1

PLOT DATE: 10/7/2016
DRAWN BY: A. KIRBY
CHECKED BY: J. SHIELDS
SHEET 151 OF 172

FILE NAME = V:\Projects\ANY\K3\28173\CADD_MSTN\12bl42\Consultants\zl2bl42erobdr_con.dgn
DATE/TIME = 10/7/2016
USER = 3724

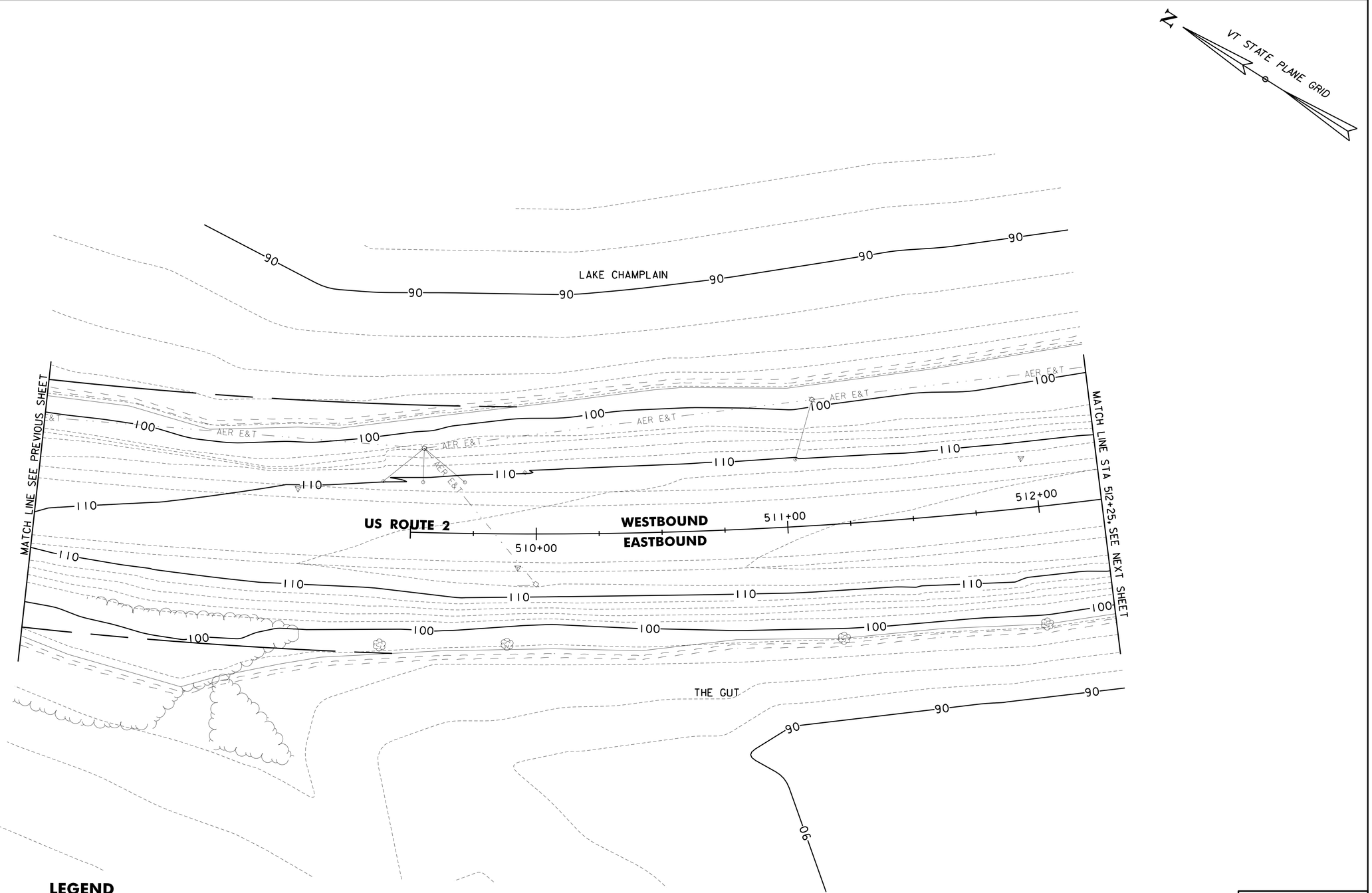

LEGEND

	TEMPORARY EROSION MATTING		VEHICLE TRACKING PAD
	WOVEN WIRE REINFORCED		DEWATERING OPERATION
BF BF	BARRIER FENCE		FILTER BAG
	GEOTEXTILE FOR FILTER CURTAIN		TEMPORARY DETOUR, CONSTRUCTION ACCESS, OR STAGING AREA

SCALE 1" = 20'-0"
20 0 20

CHA

CONSTRUCTION SEQUENCING PHASE 1

PROJECT NAME: NORTH HERO GRAND ISLE BRIDGE
PROJECT NUMBER: BHF 028-1(26)

FILE NAME: z12b142erobdr_con.dgn
PROJECT LEADER: D. GOZALKOWSKI
DESIGNED BY: J. PARRELLI
EPSC CONSTRUCTION PLAN SHEET 2

PLOT DATE: 10/7/2016
DRAWN BY: A. KIRBY
CHECKED BY: J. SHIELDS
SHEET 152 OF 172

FILE NAME = V:\Projects\ANY\K3\28173\CADD_MSTN\12b142\Consultants\z12b142erobdr_con.dgn
DATE/TIME = 10/7/2016
USER = 3724

BARRIER FENCE
STA 514+00.0 - STA 516+50.0 LT
STA 514+00.0 - STA 514+80.0 RT
STA 516+14.0 - STA 516+50.0 RT

GEOTEXTILE FOR SILT FENCE, WOVEN WIRE REINFORCED
STA 514+00.0 - STA 516+50.0 LT
STA 514+00.0 - STA 515+75.0 RT
STA 516+16.0 - STA 516+50.0 RT

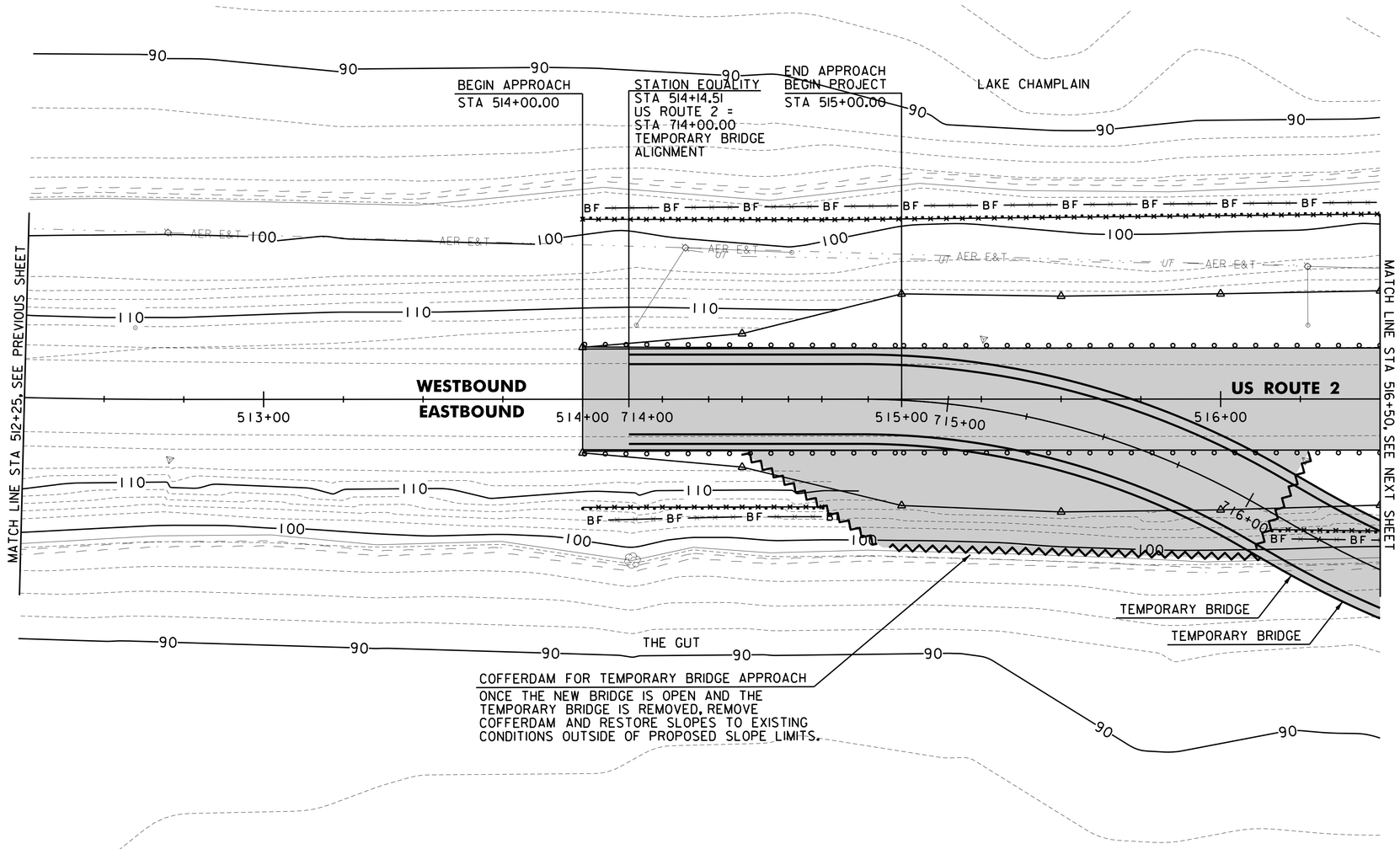

LEGEND

	TEMPORARY EROSION MATTING		VEHICLE TRACKING PAD
	WOVEN WIRE REINFORCED		DEWATERING OPERATION
BF — BF	BARRIER FENCE		FILTER BAG
	GEOTEXTILE FOR FILTER CURTAIN		TEMPORARY DETOUR, CONSTRUCTION ACCESS, OR STAGING AREA

SCALE 1" = 20'-0"
20 0 20

CHA

CONSTRUCTION SEQUENCING PHASE 1

PROJECT NAME: NORTH HERO GRAND ISLE BRIDGE
PROJECT NUMBER: BHF 028-1(26)

FILE NAME: z12b142erobdr_con.dgn
PROJECT LEADER: D. GOZALKOWSKI
DESIGNED BY: J. PARRELLI
EPSC CONSTRUCTION PLAN SHEET 3

PLOT DATE: 10/7/2016
DRAWN BY: A. KIRBY
CHECKED BY: J. SHIELDS
SHEET 153 OF 172

FILE NAME = V:\Projects\ANY\K3\28173\CADD_MSTN\12b142\Consultants\z12b142erobdr_con.dgn
DATE/TIME = 10/7/2016
USER = 3724

BARRIER FENCE
STA 516+50.0 - STA 516+64.0 LT
STA 516+50.0 - STA 517+25.0 RT
STA 520+42.0 - STA 522+23.0 RT
STA 520+67.0 - STA 522+25.0 LT

GEOTEXTILE FOR SILT FENCE, WOVEN WIRE REINFORCED
STA 516+50.0 - STA 516+64.0 LT
STA 516+50.0 - STA 517+25.0 RT
STA 520+42.0 - STA 522+23.0 RT
STA 520+64.0 - STA 520+72.0 RT
STA 520+67.0 - STA 521+20.0 LT
STA 520+71.0 - STA 521+41.0 RT
STA 521+18.0 - STA 521+38.0 LT
STA 521+38.0 - STA 521+79.0 LT
STA 521+39.0 - STA 521+58.0 RT
STA 521+56.0 - STA 522+20.0 RT
STA 521+77.0 - STA 522+25.0 LT

FILTER BAG
STA 517+15.0 LT
STA 520+15.0 LT

GEOTEXTILE FOR FILTER CURTAIN
STA 517+04.0 - STA 518+80.0 LT
STA 517+17.0 - STA 518+80.0 RT
STA 519+21.0 - STA 520+27.0 LT
STA 519+21.0 - STA 520+48.0 RT

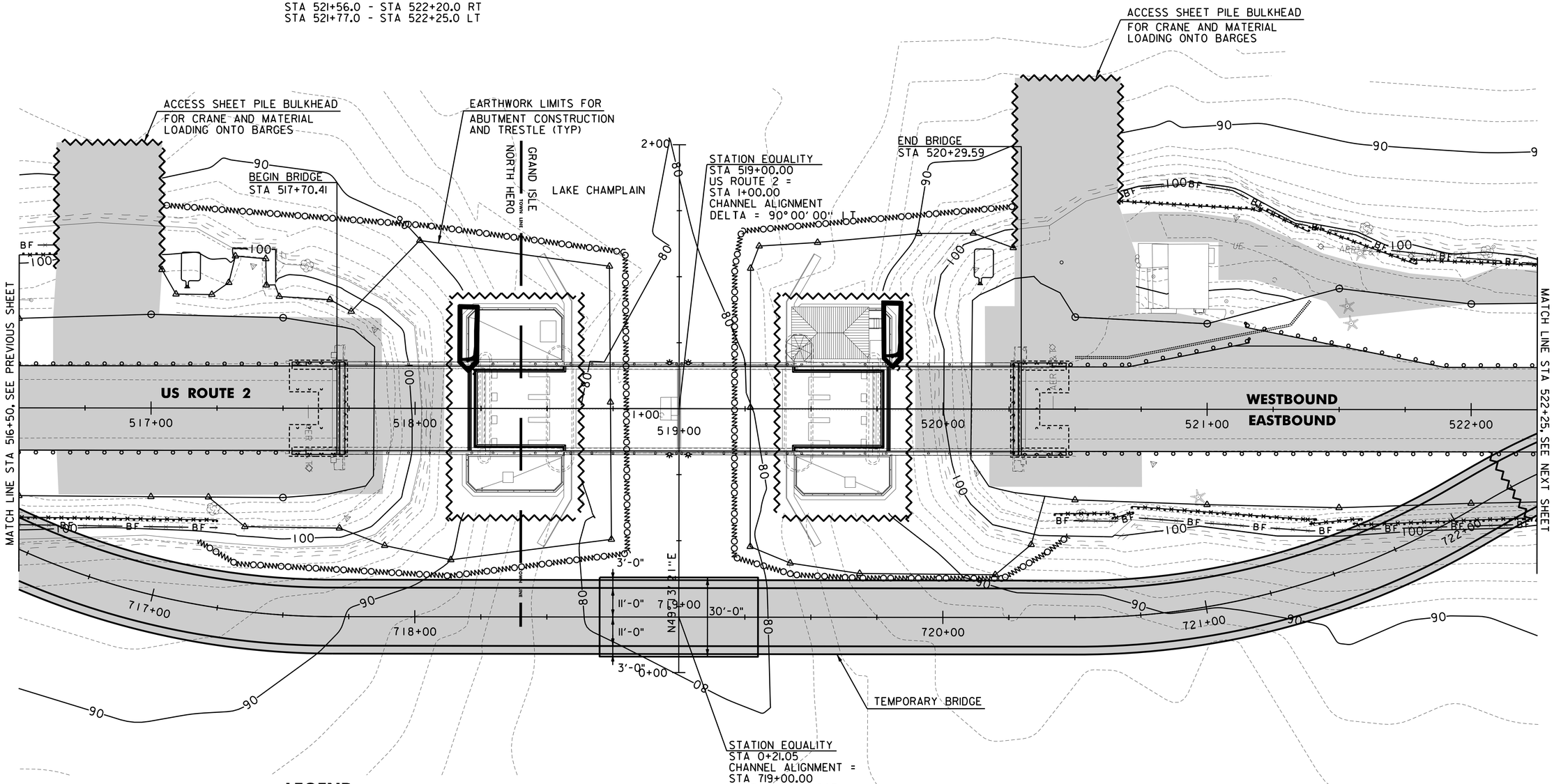

LEGEND

	TEMPORARY EROSION MATTING		VEHICLE TRACKING PAD
	WOVEN WIRE REINFORCED		DEWATERING OPERATION
BF	BARRIER FENCE		FILTER BAG
	GEOTEXTILE FOR FILTER CURTAIN		TEMPORARY DETOUR, CONSTRUCTION ACCESS, OR STAGING AREA

SCALE 1" = 20'-0"
20 0 20

CHA

CONSTRUCTION SEQUENCING PHASE 1

PROJECT NAME: NORTH HERO GRAND ISLE BRIDGE
PROJECT NUMBER: BHF 028-1(26)

FILE NAME: z12b142erobdr_con.dgn
PROJECT LEADER: D. GOZALKOWSKI
DESIGNED BY: J. PARRELLI
EPSC CONSTRUCTION PLAN SHEET 4

PLOT DATE: 10/7/2016
DRAWN BY: A. KIRBY
CHECKED BY: J. SHIELDS
SHEET 154 OF 172

FILE NAME = V:\Projects\ANY\K3\28173\CADD_MSTN\12b142\Consultants\z12b142erobdr_con.dgn
DATE/TIME = 10/7/2016
USER = 3724

BARRIER FENCE
STA 522+25.0 - STA 526+00.0 LT
STA 522+79.0 - STA 526+00.0 RT

GEOTEXTILE FOR SILT FENCE,
WOVEN WIRE REINFORCED

STA 522+25.0 - STA 522+99.0 LT
STA 522+81.0 - STA 523+63.0 RT
STA 522+96.0 - STA 523+31.0 LT
STA 523+29.0 - STA 523+83.0 LT
STA 523+61.0 - STA 523+70.0 RT
STA 523+67.0 - STA 524+01.0 RT
STA 523+81.0 - STA 523+96.0 LT
STA 523+93.0 - STA 525+28.0 LT
STA 524+00.0 - STA 524+14.0 RT
STA 524+11.0 - STA 525+05.0 RT
STA 525+02.0 - STA 525+10.0 RT
STA 525+09.0 - STA 525+16.0 RT
STA 525+15.0 - STA 525+23.0 RT
STA 525+23.0 - STA 526+00.0 RT
STA 525+29.0 - STA 526+00.0 LT

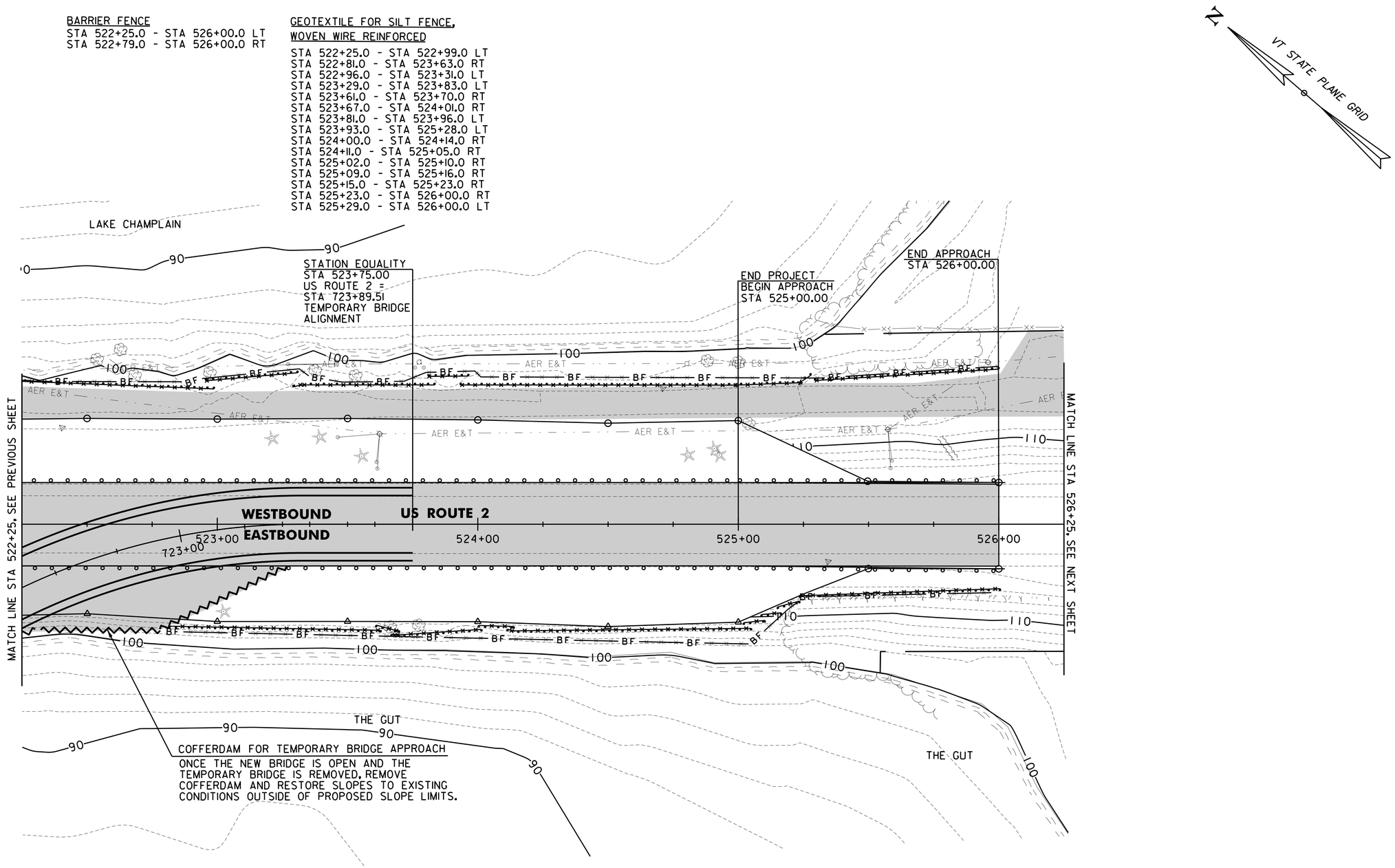

LEGEND

	TEMPORARY EROSION MATTING		VEHICLE TRACKING PAD
	WOVEN WIRE REINFORCED		DEWATERING OPERATION
BF — BF	BARRIER FENCE		FILTER BAG
	GEOTEXTILE FOR FILTER CURTAIN		TEMPORARY DETOUR, CONSTRUCTION ACCESS, OR STAGING AREA

SCALE 1" = 20'-0"
20 0 20

CHA

CONSTRUCTION SEQUENCING PHASE 1

PROJECT NAME: NORTH HERO GRAND ISLE BRIDGE
PROJECT NUMBER: BHF 028-1(26)

FILE NAME: z12b142erobdr_con.dgn
PROJECT LEADER: D. GOZALKOWSKI
DESIGNED BY: J. PARRELLI
EPSC CONSTRUCTION PLAN SHEET 5

PLOT DATE: 10/7/2016
DRAWN BY: A. KIRBY
CHECKED BY: J. SHIELDS
SHEET 155 OF 172

FILE NAME = V:\Projects\ANY\K3\28173\CADD_MSTN\12b142\Consultants\z12b142erobdr_con.dgn
DATE/TIME = 10/7/2016
USER = 3724

VEHICLE TRACKING PAD
STA 530+00.0 LT

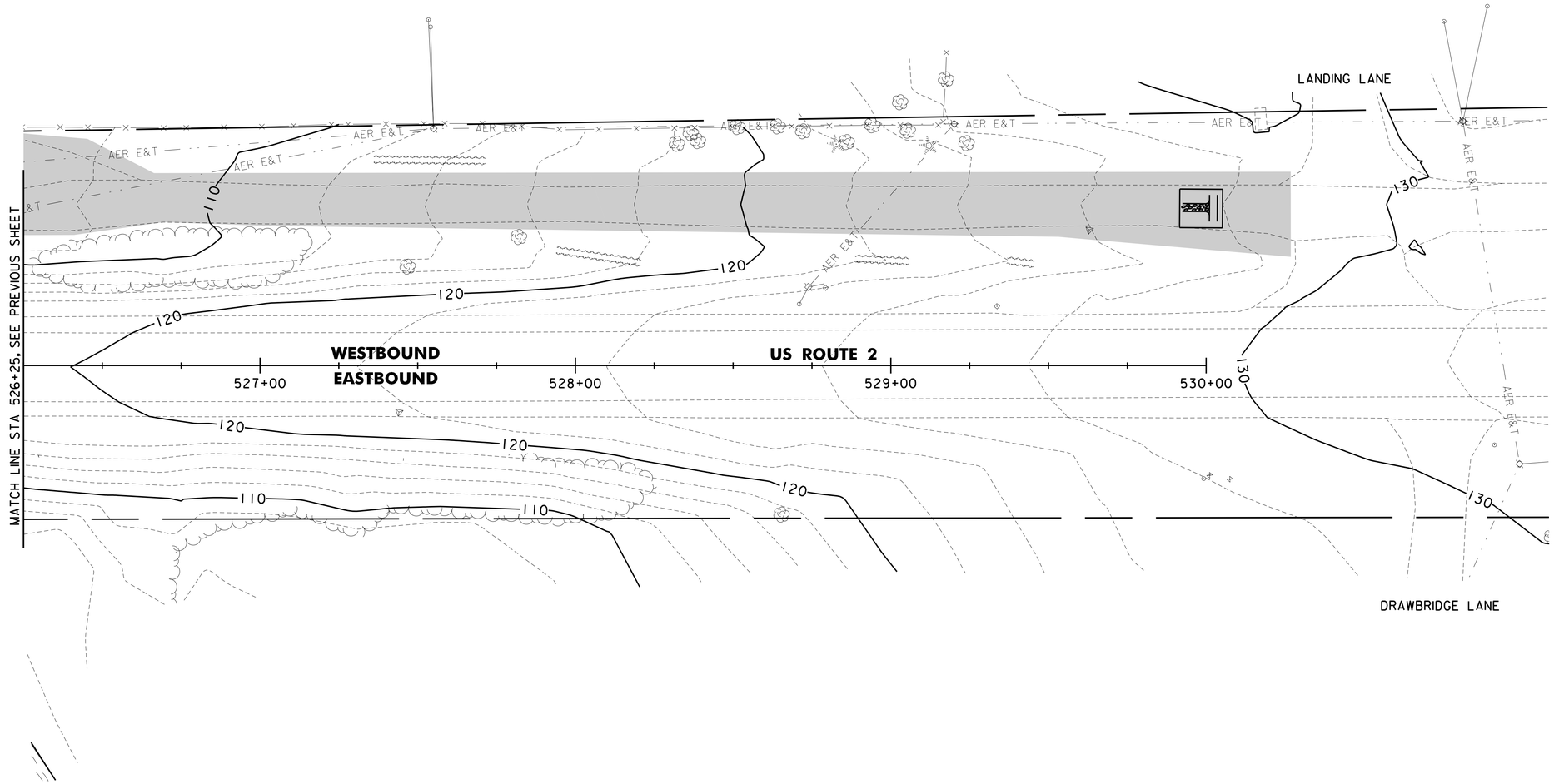

LEGEND

	TEMPORARY EROSION MATTING		VEHICLE TRACKING PAD
	WOVEN WIRE REINFORCED		DEWATERING OPERATION
BF BF	BARRIER FENCE		FILTER BAG
	GEOTEXTILE FOR FILTER CURTAIN		TEMPORARY DETOUR, CONSTRUCTION ACCESS, OR STAGING AREA

SCALE 1" = 20'-0"
20 0 20

CHA

CONSTRUCTION SEQUENCING PHASE 1

PROJECT NAME: NORTH HERO GRAND ISLE BRIDGE
PROJECT NUMBER: BHF 028-1(26)

FILE NAME: z12b142erobdr_con.dgn
PROJECT LEADER: D. GOZALKOWSKI
DESIGNED BY: J. PARRELLI
EPSC CONSTRUCTION PLAN SHEET 6

PLOT DATE: 10/7/2016
DRAWN BY: A. KIRBY
CHECKED BY: J. SHIELDS
SHEET 156 OF 172

FILE NAME = V:\Projects\ANY\K3\28173\CADD_MSTN\12b142\Consultants\z12b142erobdr_con.dgn
DATE/TIME = 10/7/2016
USER = 3724

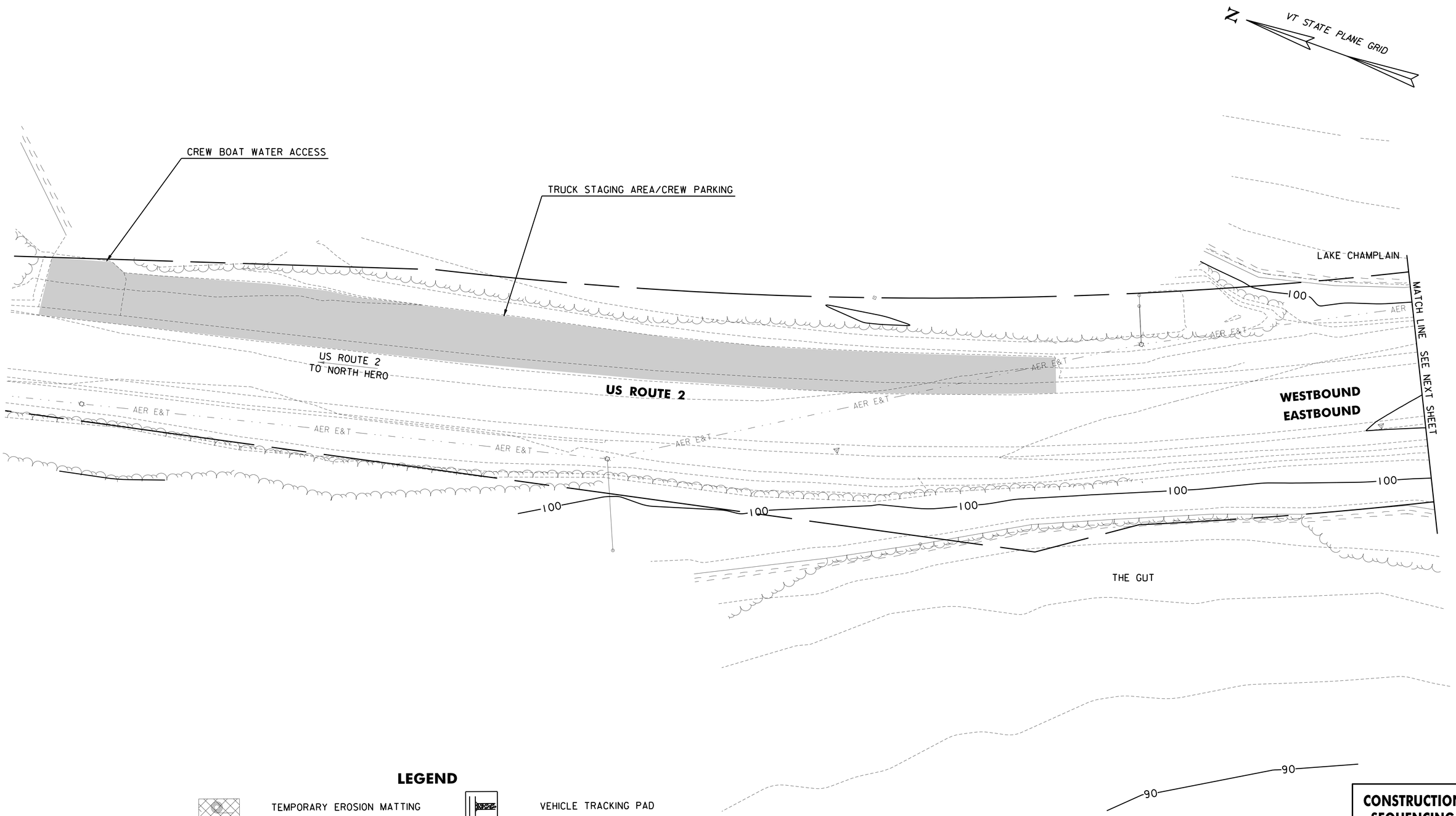

LEGEND

	TEMPORARY EROSION MATTING		VEHICLE TRACKING PAD
	WOVEN WIRE REINFORCED		DEWATERING OPERATION
BF BF	BARRIER FENCE		FILTER BAG
	GEOTEXTILE FOR FILTER CURTAIN		CONSTRUCTION ACCESS OR STAGING AREA

SCALE 1" = 20'-0"
20 0 20

CHA

CONSTRUCTION SEQUENCING PHASE 2

PROJECT NAME: NORTH HERO GRAND ISLE BRIDGE
PROJECT NUMBER: BHF 028-1(26)

FILE NAME: zl2bl42erobdr_con2.dgn
PROJECT LEADER: D. GOZALKOWSKI
DESIGNED BY: J. PARRELLI
EPSC CONSTRUCTION PLAN SHEET 7

PLOT DATE: 10/7/2016
DRAWN BY: A. KIRBY
CHECKED BY: J. SHIELDS
SHEET 157 OF 172

FILE NAME = V:\Projects\ANY\K3\28173\CADD_MSTN\12bl42\Consultants\zl2bl42erobdr_con2.dgn
DATE/TIME = 10/7/2016
USER = 3724

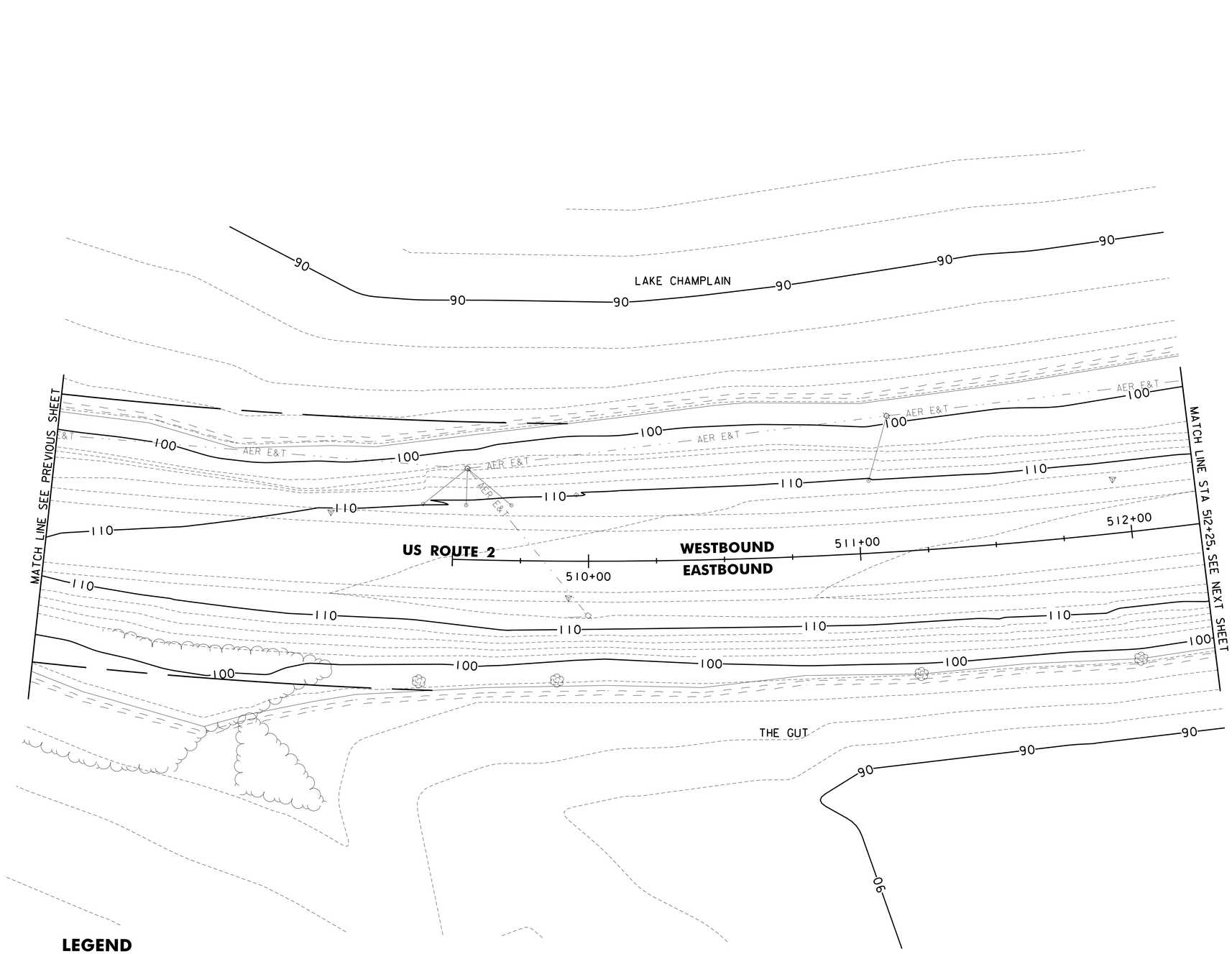

LEGEND

	TEMPORARY EROSION MATTING		VEHICLE TRACKING PAD
	WOVEN WIRE REINFORCED		DEWATERING OPERATION
BF BF	BARRIER FENCE		FILTER BAG
	GEOTEXTILE FOR FILTER CURTAIN		CONSTRUCTION ACCESS OR STAGING AREA

CONSTRUCTION SEQUENCING PHASE 2

SCALE 1" = 20'-0"
20 0 20

CHA

PROJECT NAME: NORTH HERO GRAND ISLE BRIDGE
PROJECT NUMBER: BHF 028-1(26)

FILE NAME: z12b142erobdr_con2.dgn
PROJECT LEADER: D. GOZALKOWSKI
DESIGNED BY: J. PARRELLI
EPSC CONSTRUCTION PLAN SHEET 8

PLOT DATE: 10/7/2016
DRAWN BY: A. KIRBY
CHECKED BY: J. SHIELDS
SHEET 158 OF 172

FILE NAME = V:\Projects\ANY\K3\28173\CADD_MSTN\12b142\Consultants\z12b142erobdr_con2.dgn
DATE/TIME = 10/7/2016
USER = 3724

BARRIER FENCE
STA 514+80.0 - STA 516+14.0 RT

TEMPORARY EROSION MATTING
STA 514+00.0 - STA 516+50.0 LT
STA 514+50.0 - STA 516+50.0 RT

GEOTEXTILE FOR SILT FENCE,
WOVEN WIRE REINFORCED
STA 514+73.0 - STA 516+18.0 RT

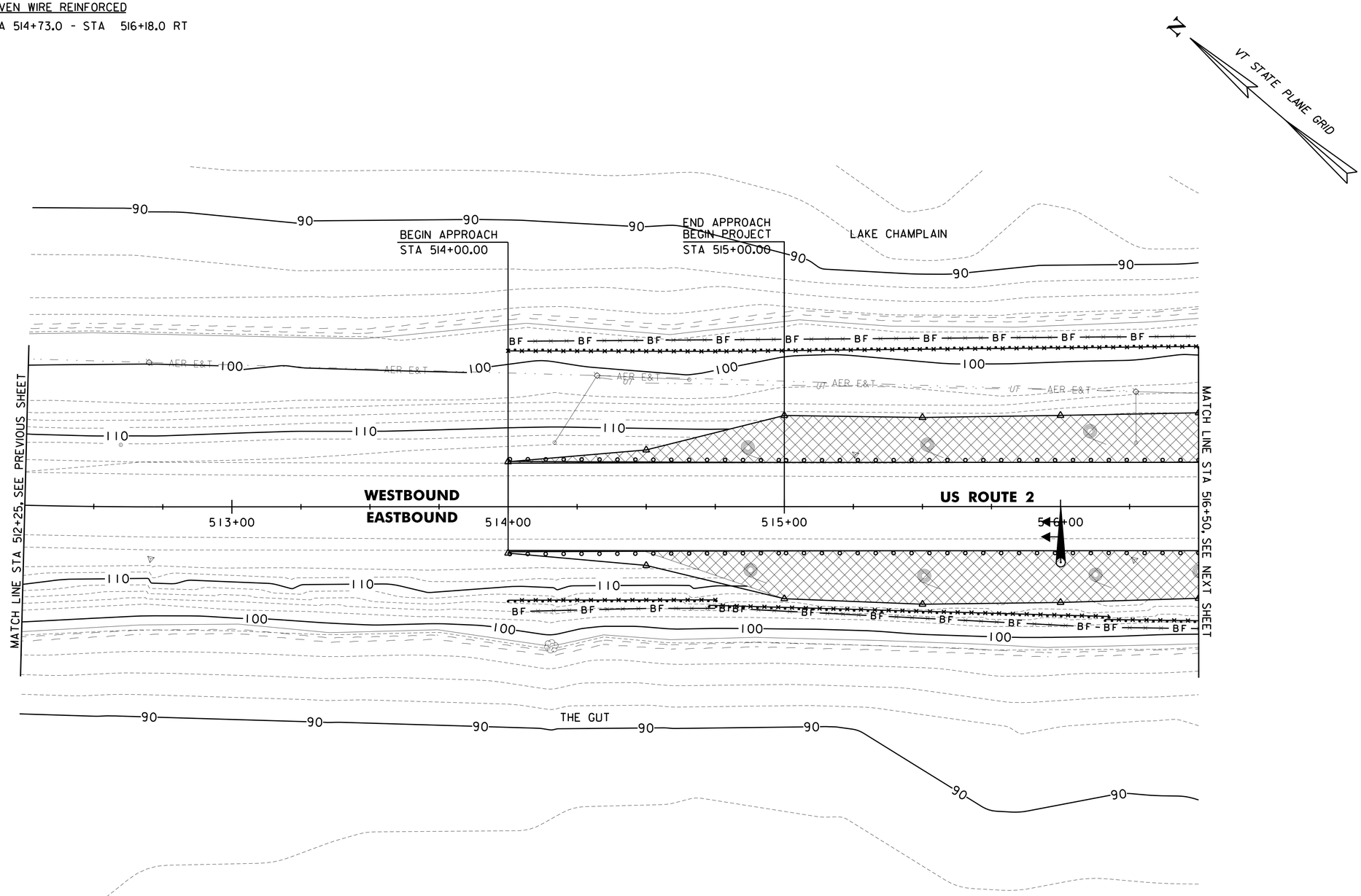

LEGEND

	TEMPORARY EROSION MATTING		VEHICLE TRACKING PAD
	WOVEN WIRE REINFORCED		DEWATERING OPERATION
BF BF	BARRIER FENCE		FILTER BAG
	GEOTEXTILE FOR FILTER CURTAIN		CONSTRUCTION ACCESS OR STAGING AREA

SCALE 1" = 20'-0"
20 0 20

CHA

CONSTRUCTION SEQUENCING PHASE 2

PROJECT NAME: NORTH HERO GRAND ISLE BRIDGE
PROJECT NUMBER: BHF 028-1(26)

FILE NAME: zl2bl42erobdr_con2.dgn	PLOT DATE: 10/7/2016
PROJECT LEADER: D. GOZALKOWSKI	DRAWN BY: A. KIRBY
DESIGNED BY: J. PARRELLI	CHECKED BY: J. SHIELDS
EPSC CONSTRUCTION PLAN SHEET 9	SHEET 159 OF 172

FILE NAME = V:\P-projects\ANY\K3\28173\CADD_MSTN\12bl42\Consultants\zl2bl42erobdr_con2.dgn
DATE/TIME = 10/7/2016
USER = 3724

BARRIER FENCE
STA 516+64.0 - STA 517+80.0 LT
STA 517+25.0 - STA 517+90.0 RT
STA 520+05.0 - STA 520+67.0 LT
STA 520+12.0 - STA 520+42.0 RT
STA 522+23.0 - STA 522+25.0 RT

TEMPORARY EROSION MATTING
STA 516+50.0 - STA 517+85.0 LT
STA 516+50.0 - STA 517+85.0 RT
STA 520+10.0 - STA 520+50.0 LT
STA 520+10.0 - STA 522+25.0 RT
STA 521+10.0 - STA 522+25.0 LT

GEOTEXTILE FOR SILT FENCE, WOVEN WIRE REINFORCED
STA 516+61.0 - STA 517+31.0 LT
STA 517+23.0 - STA 517+69.0 RT
STA 517+25.0 - STA 517+69.0 LT
STA 517+64.0 - STA 517+82.0 LT
STA 517+66.0 - STA 517+87.0 RT
STA 520+08.0 - STA 520+16.0 LT
STA 520+10.0 - STA 520+71.0 LT
STA 520+14.0 - STA 520+26.0 RT
STA 520+23.0 - STA 520+44.0 RT
STA 522+18.0 - STA 522+25.0 RT

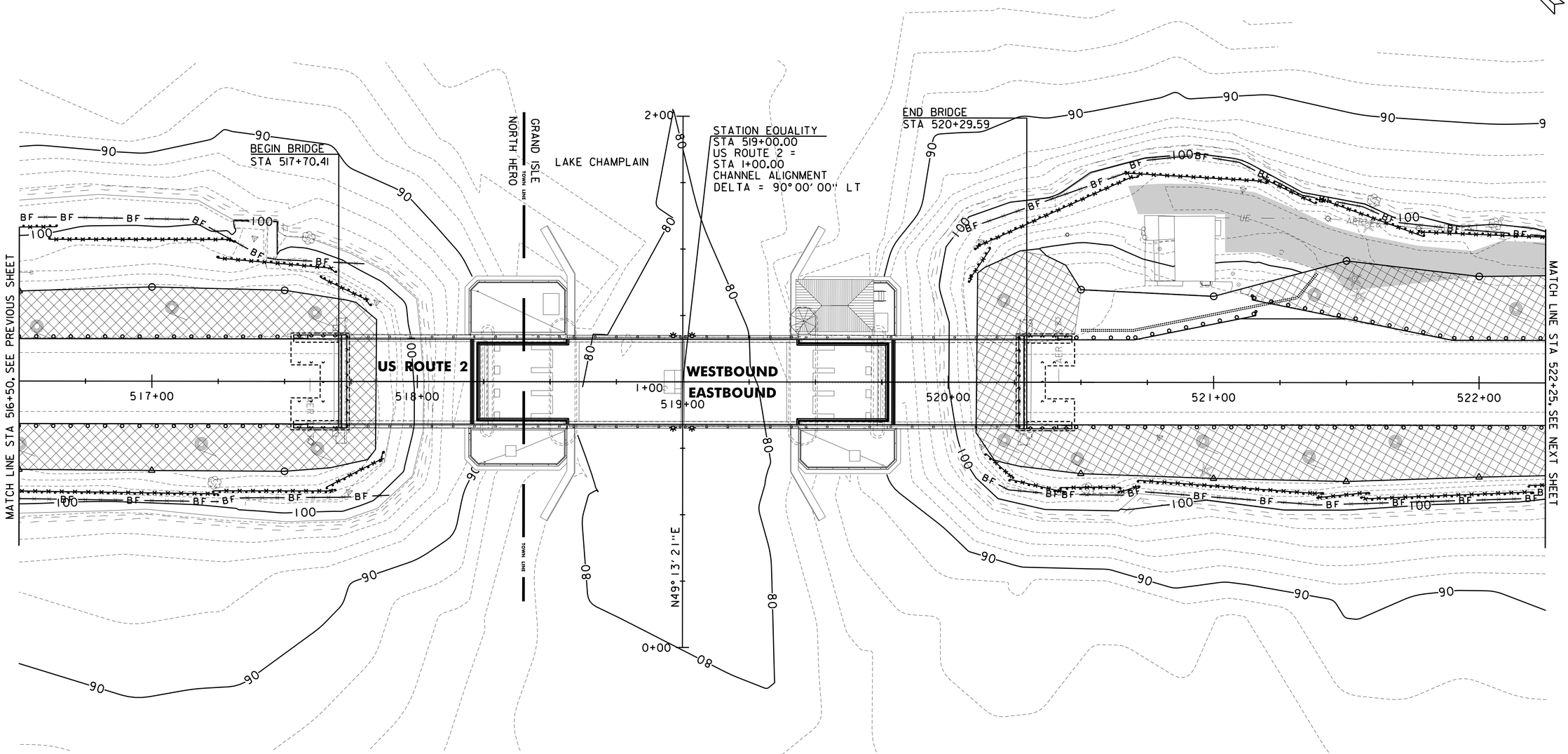

LEGEND

	TEMPORARY EROSION MATTING		VEHICLE TRACKING PAD
	WOVEN WIRE REINFORCED		DEWATERING OPERATION
BF — BF	BARRIER FENCE		FILTER BAG
	GEOTEXTILE FOR FILTER CURTAIN		CONSTRUCTION ACCESS OR STAGING AREA

SCALE 1" = 20'-0"
20 0 20

CHA

CONSTRUCTION SEQUENCING PHASE 2

PROJECT NAME: NORTH HERO GRAND ISLE BRIDGE
PROJECT NUMBER: BHF 028-1(26)

FILE NAME: z12b142erobdr_con2.dgn
PROJECT LEADER: D. GOZALKOWSKI
DESIGNED BY: J. PARRELLI
EPSC CONSTRUCTION PLAN SHEET 10

PLOT DATE: 10/7/2016
DRAWN BY: A. KIRBY
CHECKED BY: J. SHIELDS
SHEET 160 OF 172

FILE NAME = V:\Projects\ANY\K3\28173\CADD_MSTN\12b142\Consultants\z12b142erobdr_con2.dgn
DATE/TIME = 10/7/2016
USER = 3724

BARRIER FENCE
STA 522+25.0 - STA 522+79.0 RT

TEMPORARY EROSION MATTING
STA 522+25.0 - STA 525+50.0 LT
STA 522+25.0 - STA 525+50.0 RT

GEOTEXTILE FOR SILT FENCE, WOVEN WIRE REINFORCED
STA 522+25.0 - STA 522+49.0 RT
STA 522+47.0 - STA 522+83.0 RT

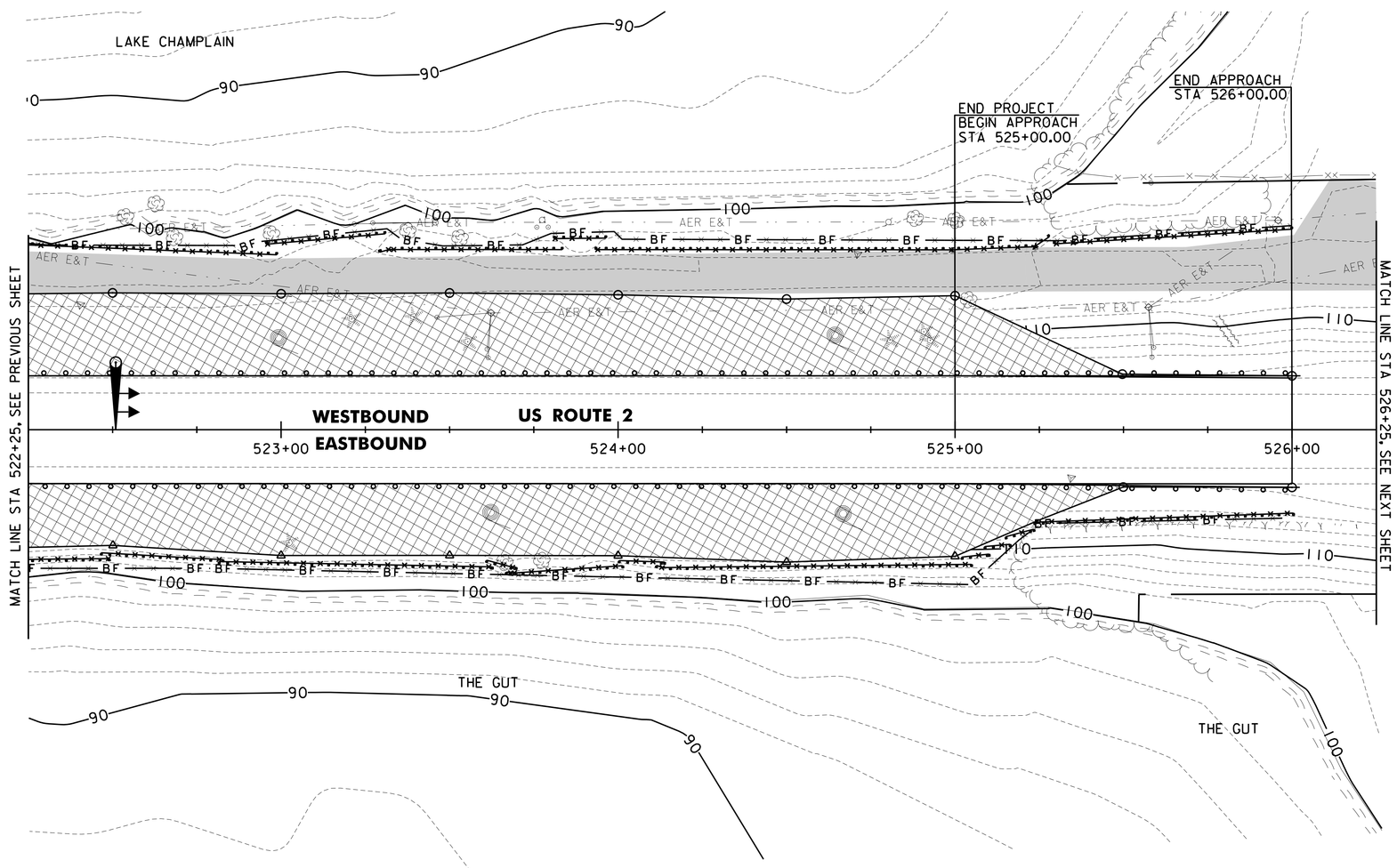

LEGEND

	TEMPORARY EROSION MATTING		VEHICLE TRACKING PAD
	WOVEN WIRE REINFORCED		DEWATERING OPERATION
BF BF	BARRIER FENCE		FILTER BAG
	GEOTEXTILE FOR FILTER CURTAIN		CONSTRUCTION ACCESS OR STAGING AREA

SCALE 1" = 20'-0"
20 0 20

CHA

CONSTRUCTION SEQUENCING PHASE 2

PROJECT NAME: NORTH HERO GRAND ISLE BRIDGE
PROJECT NUMBER: BHF 028-1(26)

FILE NAME: z12b142erobdr_con2.dgn
PROJECT LEADER: D. GOZALKOWSKI
DESIGNED BY: J. PARRELLI
EPSC CONSTRUCTION PLAN SHEET 11

PLOT DATE: 10/7/2016
DRAWN BY: A. KIRBY
CHECKED BY: J. SHIELDS
SHEET 161 OF 172

FILE NAME = V:\Projects\ANY\K3\28173\CADD_MSTN\12b142\Consultants\z12b142erobdr_con2.dgn
DATE/TIME = 10/7/2016
USER = 3724

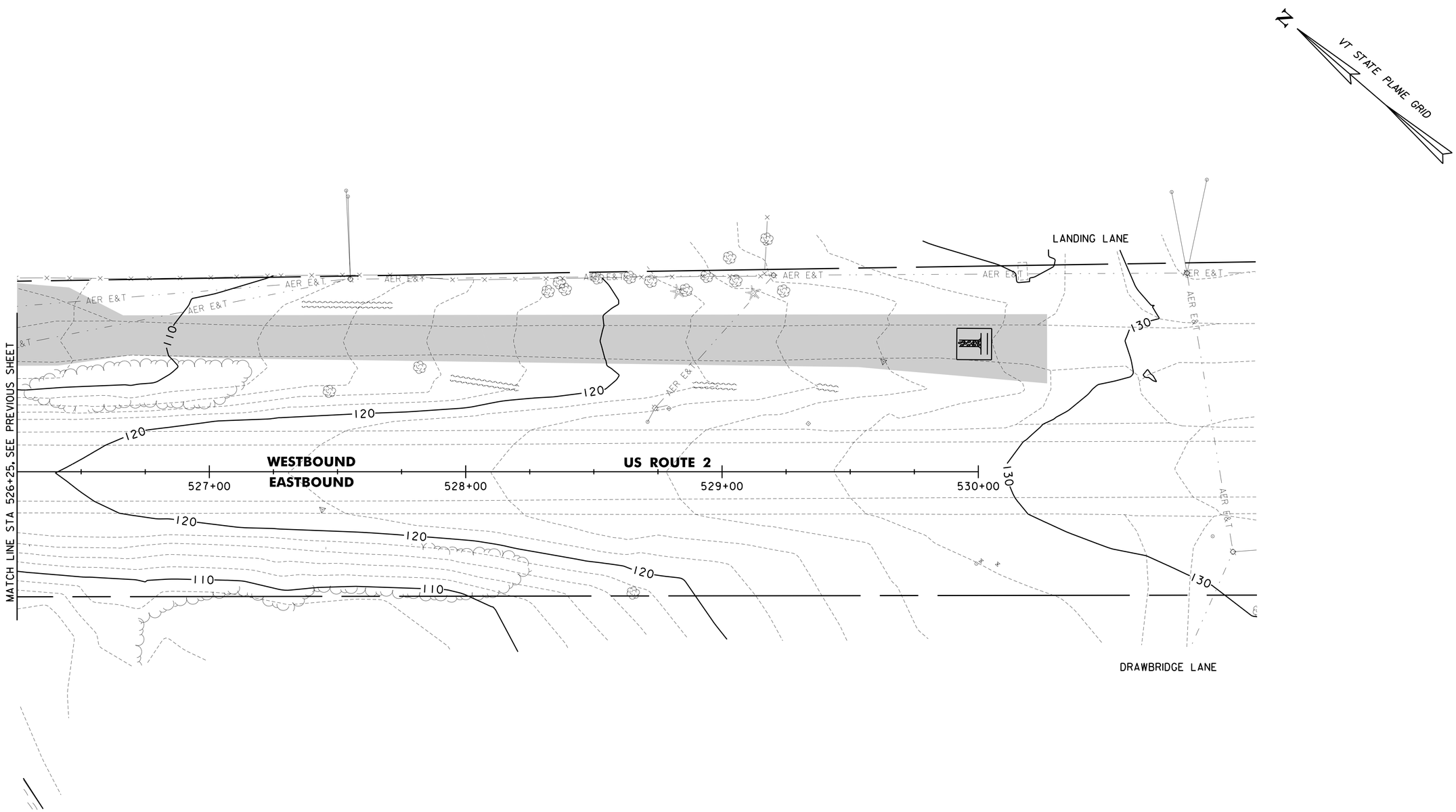

LEGEND

	TEMPORARY EROSION MATTING		VEHICLE TRACKING PAD
	WOVEN WIRE REINFORCED		DEWATERING OPERATION
BF BF	BARRIER FENCE		FILTER BAG
	GEOTEXTILE FOR FILTER CURTAIN		CONSTRUCTION ACCESS OR STAGING AREA

SCALE 1" = 20'-0"
20 0 20

CHA

CONSTRUCTION SEQUENCING PHASE 2

PROJECT NAME: NORTH HERO GRAND ISLE BRIDGE
PROJECT NUMBER: BHF 028-1(26)

FILE NAME: z12b142erobdr_con2.dgn
PROJECT LEADER: D. GOZALKOWSKI
DESIGNED BY: J. PARRELLI
EPSC CONSTRUCTION PLAN SHEET 12

PLOT DATE: 10/7/2016
DRAWN BY: A. KIRBY
CHECKED BY: J. SHIELDS
SHEET 162 OF 172

FILE NAME = V:\Projects\ANY\K3\28173\CADD_MSTN\12b142\Consultants\z12b142erobdr_con2.dgn
DATE/TIME = 10/7/2016
USER = 3724

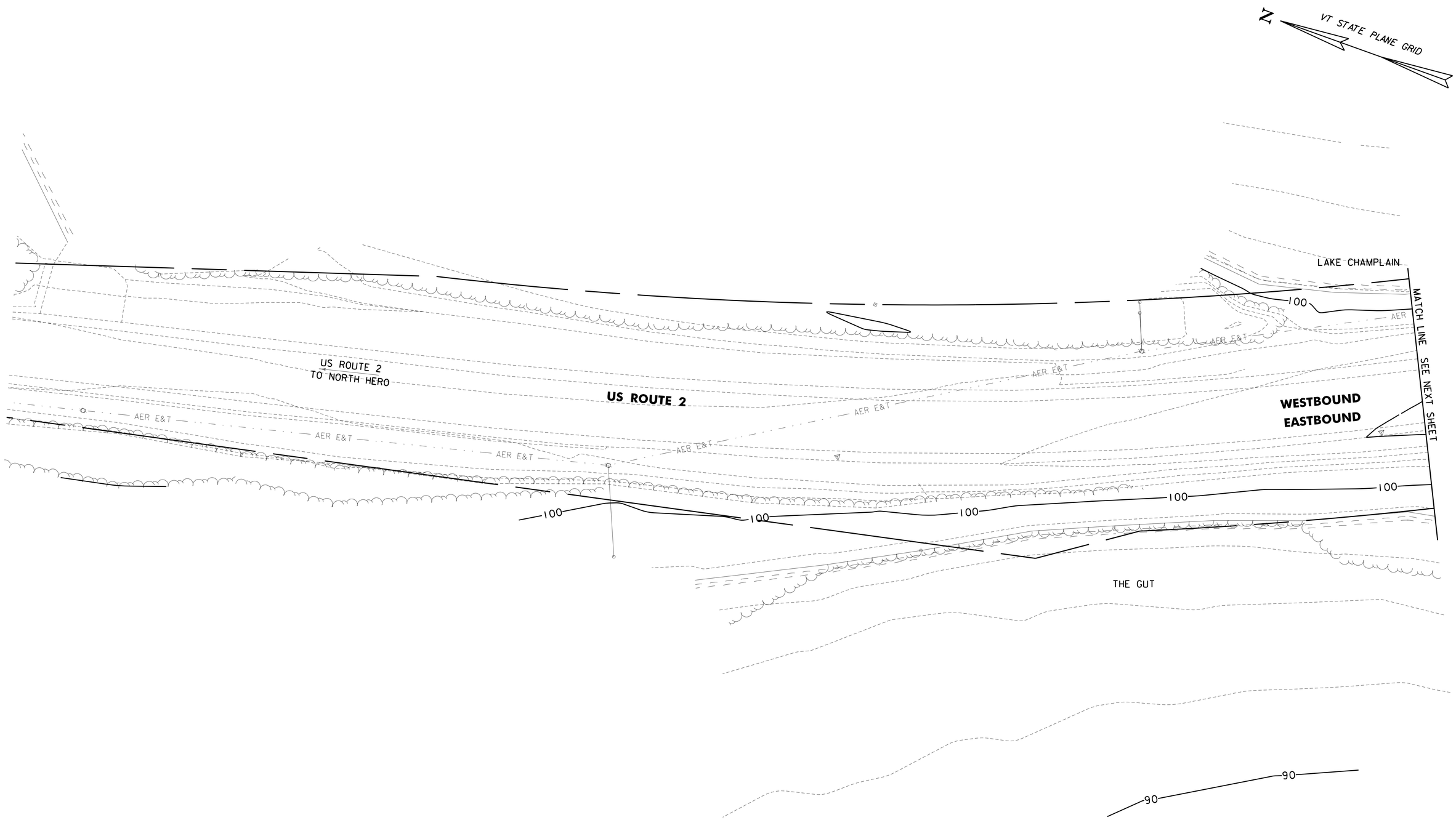

SCALE 1" = 20'-0"
20 0 20

CHA

PROJECT NAME: NORTH HERO GRAND ISLE BRIDGE	
PROJECT NUMBER: BHF 028-1(26)	
FILE NAME: z12b142erobdr_fin.dgn	PLOT DATE: 10/7/2016
PROJECT LEADER: D. GOZALKOWSKI	DRAWN BY: A. KIRBY
DESIGNED BY: J. PARRELLI	CHECKED BY: J. SHIELDS
EPSC FINAL SITE PLAN SHEET 1	SHEET 163 OF 172

FILE NAME = V:\P-projects\ANYK3\28173\CADD_MSTN\12b142\Consultants\z12b142erobdr_fin.dgn
DATE/TIME = 10/7/2016
USER = 3724

SCALE 1" = 20'-0"
20 0 20

CHA

PROJECT NAME: NORTH HERO GRAND ISLE BRIDGE	
PROJECT NUMBER: BHF 028-1(26)	
FILE NAME: z12b142erobdr_fin.dgn	PLOT DATE: 10/7/2016
PROJECT LEADER: D. GOZALKOWSKI	DRAWN BY: A. KIRBY
DESIGNED BY: J. PARRELLI	CHECKED BY: J. SHIELDS
EPSC FINAL SITE PLAN SHEET 2	SHEET 164 OF 172

FILE NAME = V:\Projects\ANY\K3\28173\CADD_MSTN\12b142\Consultants\z12b142erobdr_fin.dgn
DATE/TIME = 10/7/2016
USER = 3724

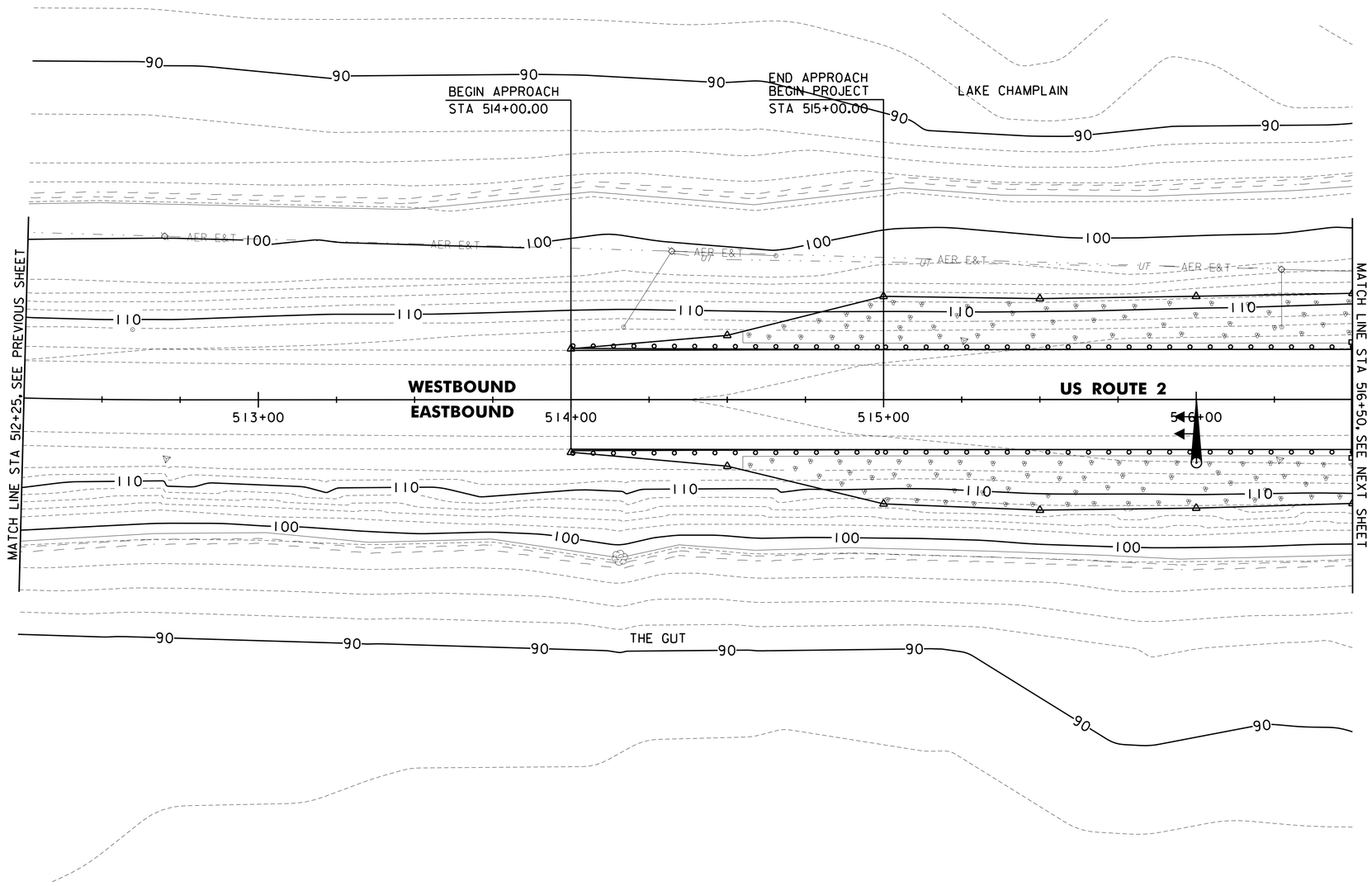

SCALE 1" = 20'-0"
20 0 20

CHA

PROJECT NAME: NORTH HERO GRAND ISLE BRIDGE	
PROJECT NUMBER: BHF 028-1(26)	
FILE NAME: z12bl42erobdr_fin.dgn	PLOT DATE: 10/7/2016
PROJECT LEADER: D. GOZALKOWSKI	DRAWN BY: A. KIRBY
DESIGNED BY: J. PARRELLI	CHECKED BY: J. SHIELDS
EPSC FINAL SITE PLAN SHEET 3	SHEET 165 OF 172

FILE NAME = V:\Projects\ANYX3\28173\CADD_MSTN\12bl42\Consultants\z12bl42erobdr_fin.dgn
DATE/TIME = 10/7/2016
USER = 3724

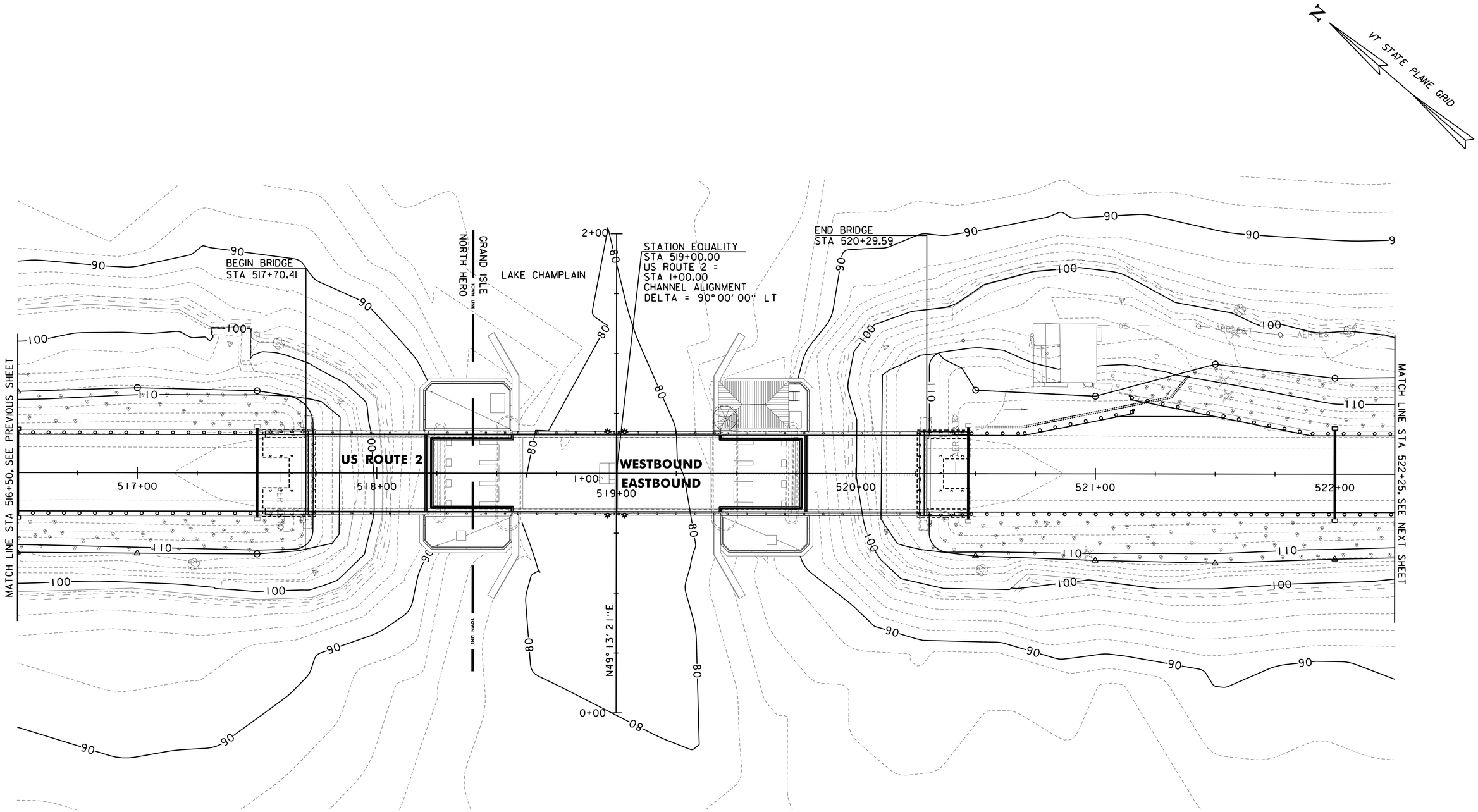

SCALE 1" = 20'-0"
20 0 20

CHA

PROJECT NAME: NORTH HERO GRAND ISLE BRIDGE	
PROJECT NUMBER: BHF 028-1(26)	
FILE NAME: zl2b142erobdr_fin.dgn	PLOT DATE: 10/7/2016
PROJECT LEADER: D. GOZALKOWSKI	DRAWN BY: A. KIRBY
DESIGNED BY: J. PARRELLI	CHECKED BY: J. SHIELDS
EPSC FINAL SITE PLAN SHEET 4	SHEET 166 OF 172

FILE NAME = V:\Projects\ANY\K3\28173\CADD_MSTN\12b142\Consultants\zl2b142erobdr_fin.dgn
DATE/TIME = 10/7/2016
USER = 3724

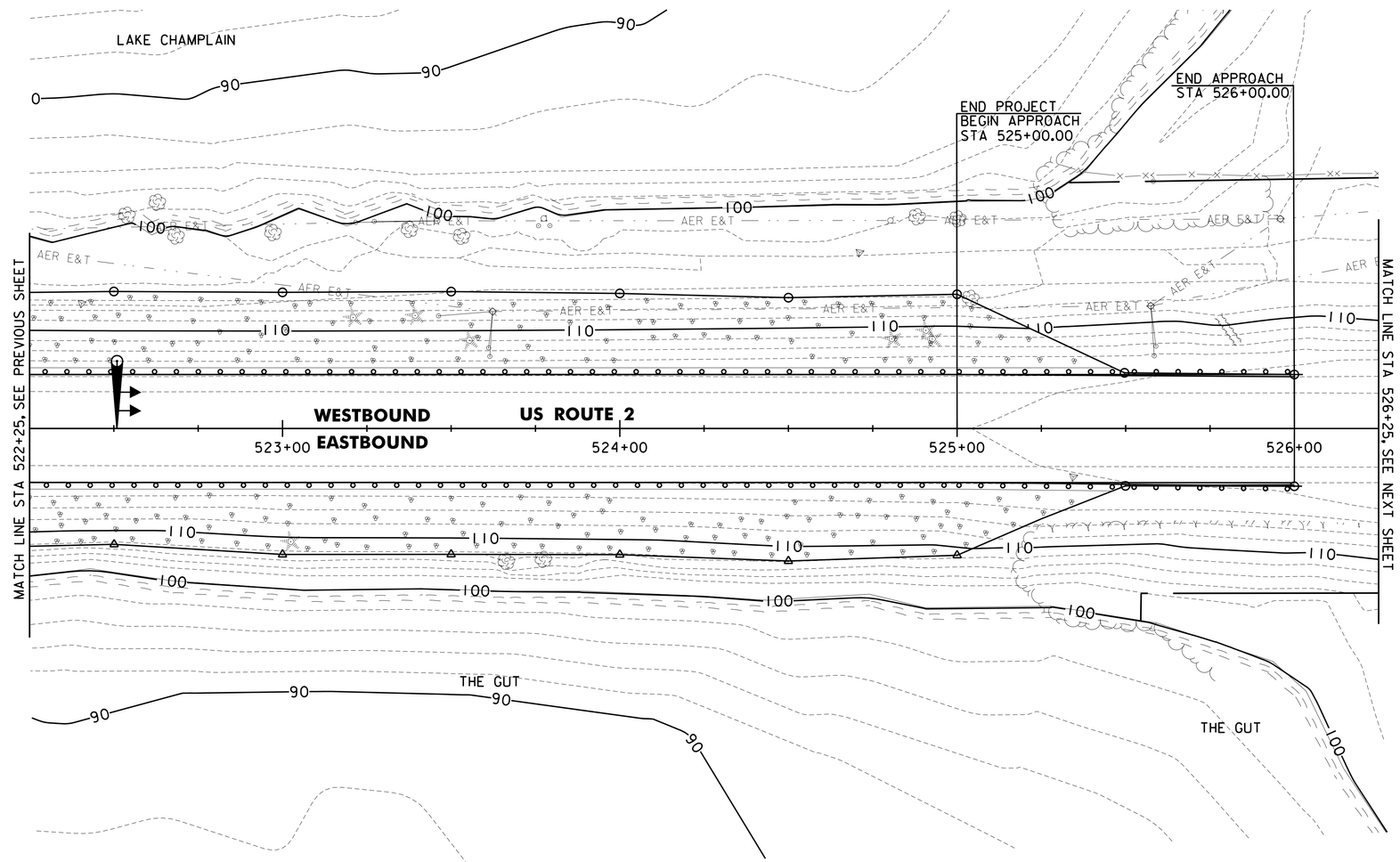

SCALE 1" = 20'-0"
20 0 20

CHA

PROJECT NAME: NORTH HERO GRAND ISLE BRIDGE	
PROJECT NUMBER: BHF 028-1(26)	
FILE NAME: z12b142erobdr_fin.dgn	PLOT DATE: 10/7/2016
PROJECT LEADER: D. GOZALKOWSKI	DRAWN BY: A. KIRBY
DESIGNED BY: J. PARRELLI	CHECKED BY: J. SHIELDS
EPSC FINAL SITE PLAN SHEET 5	SHEET 167 OF 172

FILE NAME = V:\Projects\ANY\K3\28173\CADD_MSTN\12b142\Consultants\z12b142erobdr_fin.dgn
DATE/TIME = 10/7/2016
USER = 3724

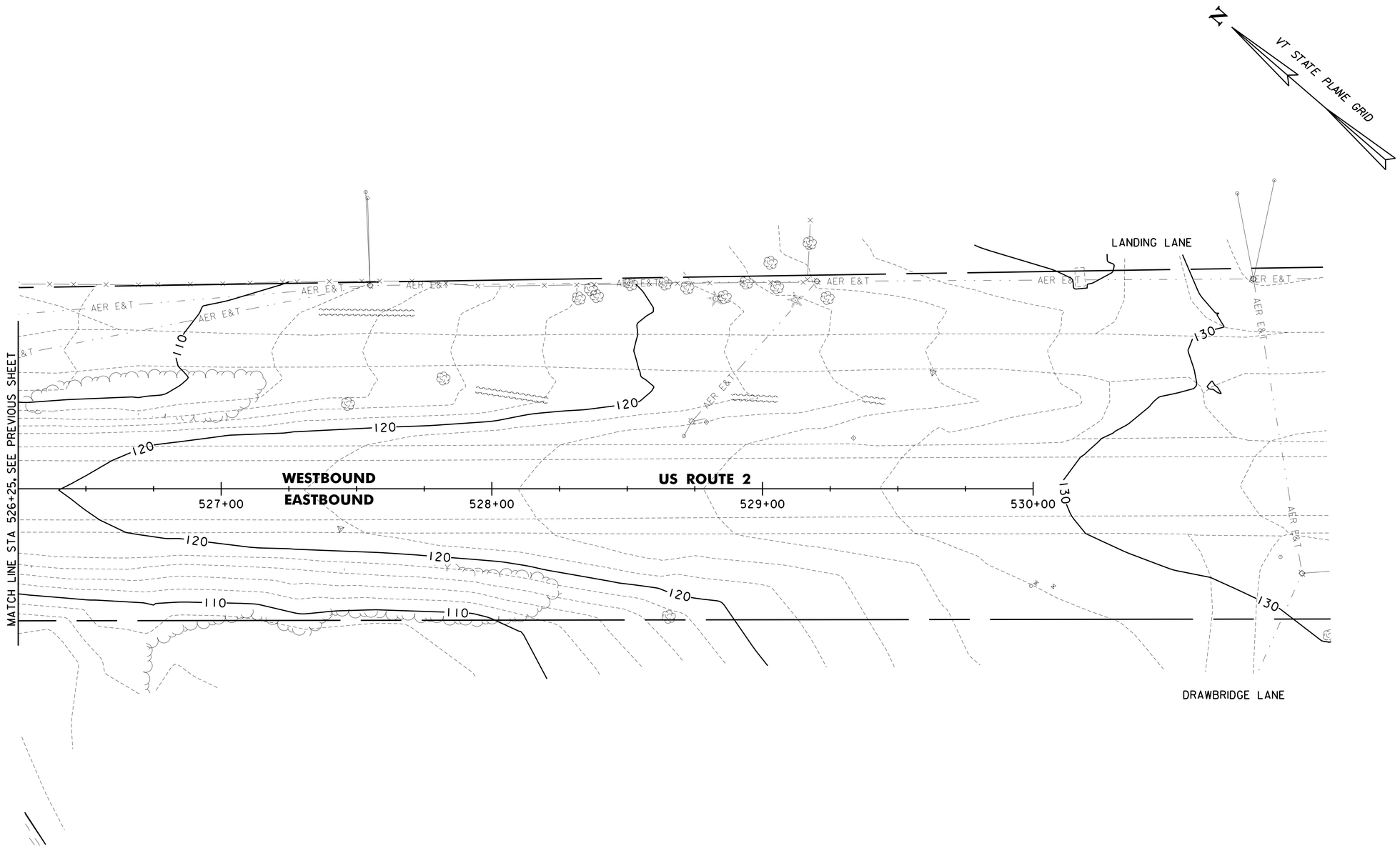

SCALE 1" = 20'-0"
20 0 20

CHA

PROJECT NAME: NORTH HERO GRAND ISLE BRIDGE	
PROJECT NUMBER: BHF 028-1(26)	
FILE NAME: z12b142erobdr_fin.dgn	PLOT DATE: 10/7/2016
PROJECT LEADER: D. GOZALKOWSKI	DRAWN BY: A. KIRBY
DESIGNED BY: J. PARRELLI	CHECKED BY: J. SHIELDS
EPSC FINAL SITE PLAN SHEET 6	SHEET 168 OF 172

FILE NAME = V:\Projects\ANY\K3\28173\CADD_MSTN\12b142\Consultants\z12b142erobdr_fin.dgn
DATE/TIME = 10/7/2016
USER = 3724

VAOT LOW GROW/FINE FESCUE MIX						
	LBS/AC					
WEIGHT	BROADCAST	HYDROSEED	NAME	LATIN NAME	GERM	PURITY
38%	57	95	CREEPING RED FESCUE	FESTUCA RUBRA VAR. RUBRA	90%	98%
29%	43.5	72.5	HARD FESCUE	FESTUCA LONGIFOLIA	85%	95%
15%	22.5	37.5	CHEWINGS FESCUE	FESTUCA RUBRA VAR. COMMUTATA	87%	95%
15%	22.5	37.5	ANNUAL RYEGRASS	LOLIUM MULTIFLORUM	90%	95%
3%	4.5	7.5	INERTS			
100%	150	250				

VAOT RURAL AREA MIX						
	LBS/AC					
WEIGHT	BROADCAST	HYDROSEED	NAME	LATIN NAME	GERM	PURITY
37.5%	22.5	45	CREEPING RED FESCUE	FESTUCA RUBRA VAR. RUBRA	85%	98%
37.5%	22.5	45	TALL FESCUE	FESTUCA ARUNDINACEA	90%	95%
5.0%	3	6	RED TOP	AGROSTIS GIGANTEA	90%	95%
15.0%	9	18	WHITE FIELD CLOVER	TRIFOLIUM REPENS	85%	98%
5.0%	3	6	ANNUAL RYE GRASS	LOLIUM MULTIFLORUM	85%	95%
100%	60	120				

GENERAL AMENDMENT GUIDANCE		
FERTILIZER	LIME	
10/20/10	AG LIME	PELLITIZED
500 LBS/AC	2 TONS/AC	1 TONS/AC

CONSTRUCTION GUIDANCE

1. SEED MIX: THE CONTRACTOR SHALL COORDINATE WITH THE RESIDENT ENGINEER ON WHICH SEED MIX TO USE.
2. SEED MIX: USE AS INDICATED IN THE PLANS AND/OR FOR ALL ESTABLISHED UPLAND (NON WETLAND) AREAS DISTURBED BY THE CONTRACTOR.
3. ALL SEED MIXTURES: SHALL NOT HAVE A WEED CONTENT EXCEEDING 0.40% BY WEIGHT AND SHALL BE FREE OF ALL NOXIOUS SEED.
4. FERTILIZER AND LIMESTONE: SHALL FOLLOW RATES SHOWN ON PLAN OR AS DIRECTED BY THE ENGINEER.
5. HAY MULCH: TO BE PLACED ON EARTH SLOPES AT THE RATE OF 2 TONS/ACRE, ACHIEVE 90% GROUND COVER OR AS DIRECTED BY THE ENGINEER.
6. HYDROSEEDING: ALTHOUGH GUIDANCE IS GIVEN ABOVE THE SITE CONDITIONS AND THE TYPE OF HYDROSEED PROPOSED FOR USE WILL ULTIMATELY DICTATE THE AMOUNTS AND TYPES OF SOIL AMENDMENTS TO BE APPLIED.
7. TURF ESTABLISHMENT: PLACING SEED, FERTILIZER, LIME AND MULCH PRIOR TO SEPTEMBER 15 AND AFTER APRIL 15 CAN BETTER ENSURE A VIGOROUS GROWTH OF GRASS.

ADAPTED FROM VTRANS TECHNICAL LANDSCAPE MANUAL FOR ROADWAYS AND TRANSPORTATION FACILITIES

TURF ESTABLISHMENT

THIS WORK SHALL BE PERFORMED IN ACCORDANCE WITH SECTION 651 FOR SEED (PAY ITEM 651.15)

REVISIONS	
JANUARY 12, 2015	WHF

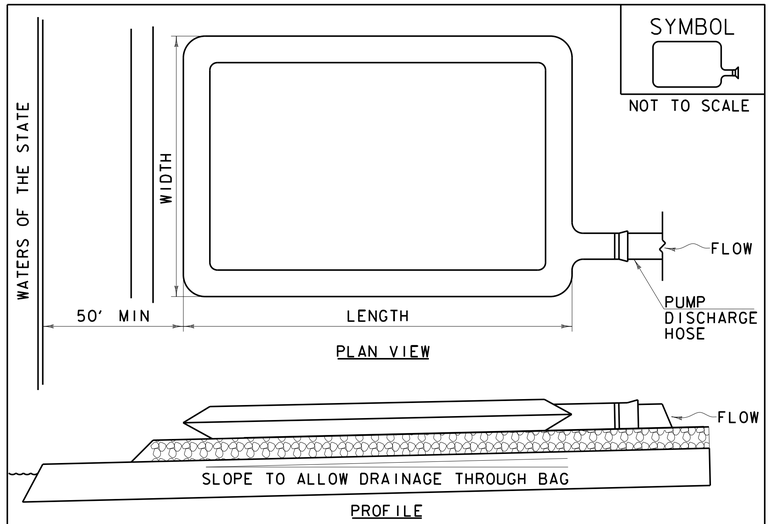

CONSTRUCTION SPECIFICATIONS

1. THE PRIMARY PURPOSE OF FILTER BAG IS TO RETAIN SILT, SAND, AND FINES DURING DEWATERING OPERATIONS.
2. FILTER BAGS SHALL BE INSTALLED ON A VEGETATED SLOPE GRADED TO ALLOW INCOMING WATER TO FLOW THROUGH THE BAG.
3. FILTER BAGS MAY ALSO BE PLACED ON COARSE AGGREGATE, STONE, OR HAYBALES TO INCREASE FILTRATION EFFICIENCY.
4. FILTER BAGS SHALL BE LOCATED A MINIMUM OF 50' FROM WATERS OF THE STATE UNLESS OTHERWISE APPROVED BY THE ENGINEER.
5. THE NECK OF THE FILTER BAG SHALL BE STRAPPED TIGHTLY TO THE DISCHARGE HOSE.
6. A FILTER BAG IS FULL WHEN IT NO LONGER CAN EFFICIENTLY FILTER SEDIMENT OR ALLOW WATER TO PASS AT A REASONABLE RATE.
7. FILTER BAG SHALL BE DISPOSED OF AS APPROVED IN THE EPSC PLAN OR AS DIRECTED BY THE ENGINEER.

FILTER BAG

NOTES:
REFER TO "THE VERMONT STANDARDS & SPECIFICATIONS FOR EROSION PREVENTION & SEDIMENT CONTROL -2006- "FROM THE VT AGENCY OF NATURAL RESOURCES FOR ADDITIONAL GUIDANCE.

THIS WORK SHALL BE PERFORMED IN ACCORDANCE WITH SECTION 653 FOR FILTER BAG (PAY ITEM 653.45) AND AS SPECIFIED IN THE CONTRACT.

REVISIONS	
MARCH 24, 2008	WHF
JANUARY 13, 2009	WHF

PROJECT NAME: NORTH HERO GRAND ISLE BRIDGE
PROJECT NUMBER: BHF 028-1(26)

CHA

FILE NAME: z12bi42erodet.dgn
PROJECT LEADER: D. GOZALKOWSKI
DESIGNED BY: J. PARRELLI
EPSC DETAIL SHEET 1

PLOT DATE: 10/7/2016
DRAWN BY: A. KIRBY
CHECKED BY: J. SHIELDS
SHEET 169 OF 172

FILE NAME = V:\P-projects\ANY\K3\28173\CADD_MSTN\12bi42\Consultants\z12bi42erodet.dgn
DATE/TIME = 10/7/2016
USER = 3724

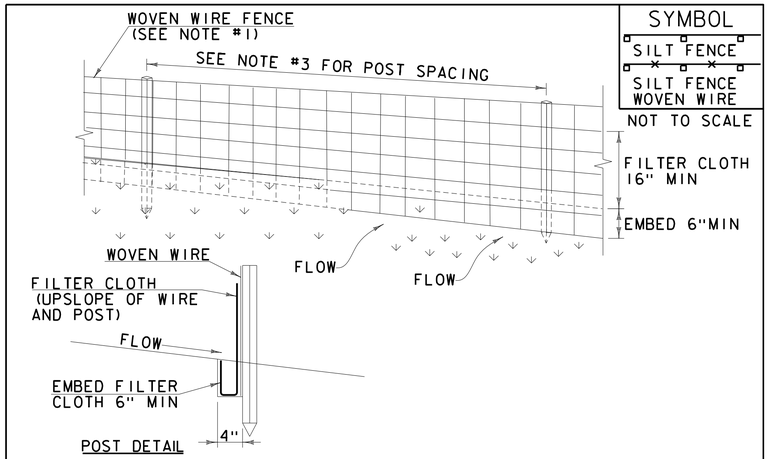

CONSTRUCTION SPECIFICATIONS

1. WOVEN WIRE REINFORCED FENCE IS REQUIRED WITHIN 100' UPSLOPE OF RECEIVING WATERS WHEN THE PROJECT FALLS UNDER A CONSTRUCTION STORMWATER PERMIT. WOVEN WIRE SHALL BE A MIN. 14 GAUGE WITH A 6" MAX. MESH OPENING.
2. FILTER CLOTH SHALL BE EITHER FILTER X, MIRAFI100X, STABILINKA T140N OR APPROVED EQUIVALENT.
3. POST SPACING FOR WIRE-BACKED FENCE SHALL BE 10' MAXIMUM. FOR FILTER-CLOTH FENCE, WHEN ELONGATION IS >50%, POST SPACING SHALL NOT EXCEED 4' AND WHEN ELONGATION IS <50%, POST SPACING SHALL NOT EXCEED 6'.
4. WOVEN WIRE FENCE IS TO BE FASTENED SECURELY TO FENCE POSTS WITH WIRE TIES. FILTER CLOTH IS TO BE FASTENED SECURELY TO WOVEN WIRE FENCE WITH TIES SPACED EVERY 24" AT TOP AND MID SECTION.
5. WHEN TWO SECTIONS OF FILTER CLOTH ADJOIN EACH OTHER THEY SHALL BE OVER-LAPPED BY 6" AND FOLDED.
6. MAINTENANCE SHALL BE PERFORMED AS NEEDED AND MATERIAL REMOVED WHEN SEDIMENT REACHES HALF OF FABRIC HEIGHT.

ADAPTED FROM DETAILS PROVIDED BY: NEW YORK STATE DEC
ORIGINALLY DEVELOPED BY USDA-NRCS
VERMONT DEPARTMENT OF ENVIRONMENTAL CONSERVATION

SILT FENCE

NOTES:
REFER TO "THE VERMONT STANDARDS & SPECIFICATIONS FOR EROSION PREVENTION & SEDIMENT CONTROL -2006- " FROM THE VT AGENCY OF NATURAL RESOURCES FOR ADDITIONAL GUIDANCE.

THIS WORK SHALL BE PERFORMED IN ACCORDANCE WITH SECTION 649 AND AS SHOWN IN THE PLANS FOR ~~GEOTEXTILE FOR SILT FENCE (PAY ITEM 649.51) OR~~ GEOTEXTILE FOR SILT FENCE, WOVEN WIRE REINFORCED (PAY ITEM 649.515).

REVISIONS	
MARCH 21, 2008	WHF
DECEMBER 11, 2008	WHF
JANUARY 13, 2009	WHF

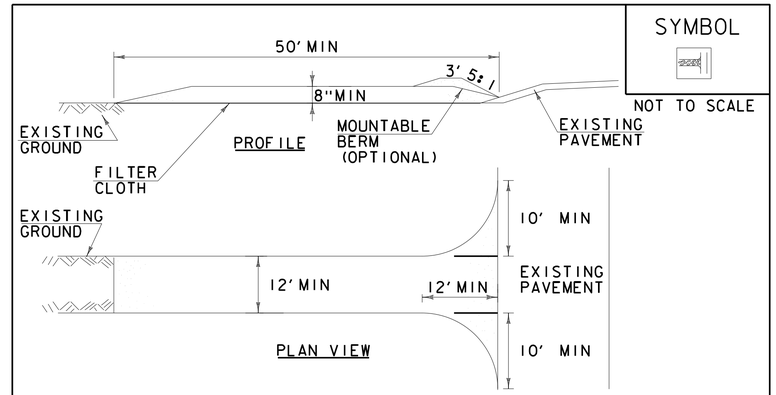

CONSTRUCTION SPECIFICATIONS

1. STONE SIZE- USE 1-4" STONE, RECLAIMED OR RECYCLED CONCRETE EQUIVALENT.
2. LENGTH- NOT LESS THAN 50' (EXCEPT ON A SINGLE RESIDENCE LOT WHERE A 30' MINIMUM LENGTH APPLIES).
3. THICKNESS- NOT LESS THAN 8".
4. WIDTH- 12' MINIMUM, BUT NOT LESS THAN THE FULL WIDTH AT POINTS WHERE INGRESS OR EGRESS OCCURS. 24' IF SINGLE ENTRANCE TO SITE.
5. GEOTEXTILE MUST BE PLACED OVER THE ENTIRE AREA PRIOR TO PLACING STONE.
6. SURFACE WATER- ALL SURFACE WATER FLOWING OR DIVERTED TOWARD CONSTRUCTION ENTRANCES SHALL BE PIPED BENEATH THE ENTRANCE. IF PIPING IS IMPRACTICAL, A MOUNTABLE BERM WITH 5:1 SLOPES WILL BE PERMITTED.
7. MAINTENANCE- THE ENTRANCE SHALL BE MAINTAINED IN A CONDITION WHICH WILL PREVENT TRACKING OR FLOWING OF SEDIMENT ONTO PUBLIC RIGHTS-OF-WAY, ALL SEDIMENT SPILLED, DROPPED, WASHED OR TRACKED ONTO PUBLIC RIGHTS-OF-WAY MUST BE REMOVED IMMEDIATELY.
8. WHEN WASHING IS REQUIRED, IT SHALL BE DONE ON AN AREA STABILIZED WITH STONE AND WHICH DRAINS INTO AN APPROVED SEDIMENT TRAPPING DEVICE.
9. PERIODIC INSPECTION AND NEEDED MAINTENANCE SHALL BE PROVIDED ACCORDING TO PERMIT REQUIREMENTS.

ADAPTED FROM DETAILS PROVIDED BY: NEW YORK STATE DEC
ORIGINALLY DEVELOPED BY USDA-NRCS
VERMONT DEPARTMENT OF ENVIRONMENTAL CONSERVATION

STABILIZED CONSTRUCTION ENTRANCE

NOTES:
REFER TO "THE VERMONT STANDARDS & SPECIFICATIONS FOR EROSION PREVENTION & SEDIMENT CONTROL -2006- " FROM THE VT AGENCY OF NATURAL RESOURCES FOR ADDITIONAL GUIDANCE.

THIS WORK SHALL BE PERFORMED IN ACCORDANCE WITH SECTION 653 FOR VEHICLE TRACKING PAD (PAY ITEM 653.35) OR AS SPECIFIED IN THE CONTRACT.

REVISIONS	
MARCH 24, 2008	WHF
JANUARY 13, 2009	WHF

CHA

PROJECT NAME: NORTH HERO GRAND ISLE BRIDGE
PROJECT NUMBER: BHF 028-1(26)

FILE NAME: zl2bl42erodet.dgn
PROJECT LEADER: D. GOZALKOWSKI
DESIGNED BY: J. PARRELLI
EPSC DETAIL SHEET 2

PLOT DATE: 10/7/2016
DRAWN BY: A. KIRBY
CHECKED BY: J. SHIELDS
SHEET 170 OF 172

FILE NAME = V:\Projects\ANY\K3\28173\CADD_MSTN\2bl42\Consultants\zl2bl42erodet.dgn
DATE/TIME = 10/7/2016
USER = 3724

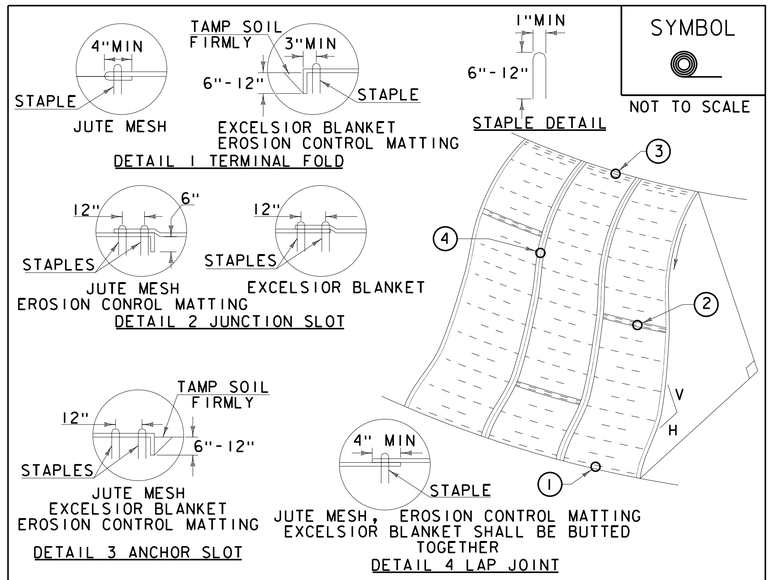

SYMBOL

NOT TO SCALE

CONSTRUCTION SPECIFICATIONS

1. APPLY TO SLOPES GREATER THAN 3H:1V OR WHERE NECESSARY TO AID IN ESTABLISHING VEGETATION.
2. APPLY FERTILIZER, LIME SEED PRIOR TO PLACING MATTING.
3. STAPLES ARE TO BE PLACED ALTERNATELY, IN COLUMNS APPROXIMATELY 2' APART AND IN ROWS APPROXIMATELY 3' APART. APPROXIMATELY 175 STAPLES ARE REQUIRED PER 4'X225' ROLL OF MATERIAL AND 125 STAPLES ARE REQUIRED PER 4'X150' ROLL OF MATERIAL.
4. DISTURBED AREAS SHALL BE SMOOTHLY GRADED. EROSION CONTROL MATERIAL SHALL BE PLACED LOOSELY OVER GROUND SURFACE. DO NOT STRETCH.
5. ALL TERMINAL ENDS AND TRANSVERSE LAPS SHALL BE STAPLED AT APPROXIMATELY 12" INTERVALS.

ADAPTED FROM DETAILS PROVIDED BY: NEW YORK STATE DEC
ORIGINALLY DEVELOPED BY USDA-NRCS
VERMONT DEPARTMENT OF ENVIRONMENTAL CONSERVATION

ROLLED EROSION CONTROL PRODUCT (RECP) SIDE SLOPE

NOTES:
REFER TO "THE VERMONT STANDARDS & SPECIFICATIONS FOR EROSION PREVENTION & SEDIMENT CONTROL -2006- "FROM THE VT AGENCY OF NATURAL RESOURCES FOR ADDITIONAL GUIDANCE.
THIS WORK SHALL BE PERFORMED IN ACCORDANCE WITH SECTION 653 AND AS SHOWN IN THE PLANS FOR TEMPORARY EROSION MATTING (PAY ITEM 653.20) ~~OR PERMANENT EROSION MATTING (PAY ITEM 653.21).~~

REVISIONS	
APRIL 16, 2007	JMF
JANUARY 13, 2009	WHF

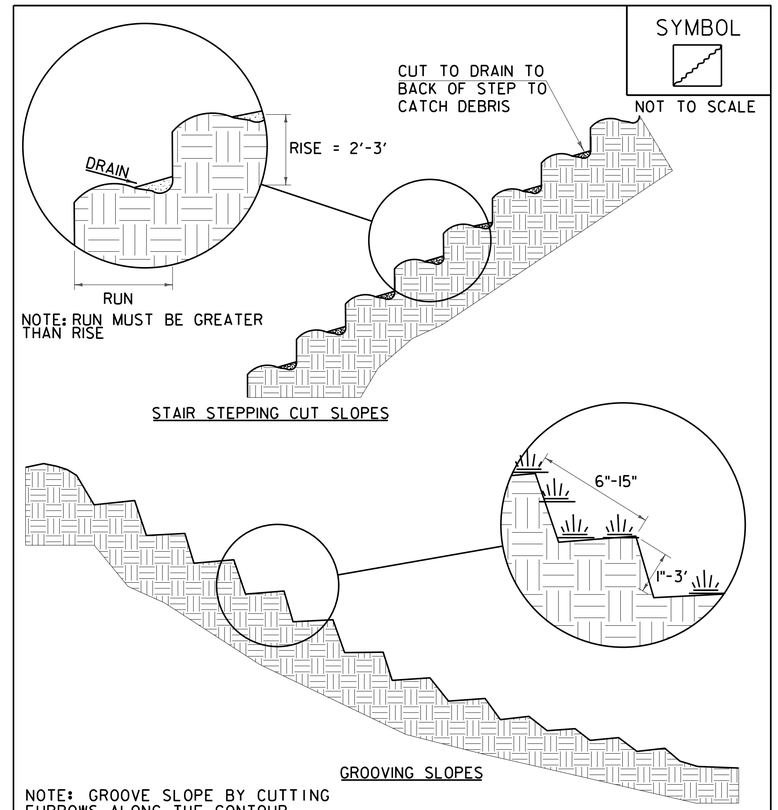

SYMBOL

NOT TO SCALE

NOTE: RUN MUST BE GREATER THAN RISE

STAIR STEPPING CUT SLOPES

GROOVING SLOPES

NOTE: GROOVE SLOPE BY CUTTING FURROWS ALONG THE CONTOUR. IRREGULARITIES IN THE SOIL SURFACE CATCH RAINWATER AND RETAIN LIME, FERTILIZER AND SEED.

ADAPTED FROM DETAILS PROVIDED BY: NEW YORK STATE DEC
ORIGINALLY DEVELOPED BY USDA-NRCS
VERMONT DEPARTMENT OF ENVIRONMENTAL CONSERVATION

SURFACE ROUGHENING

NOTES:
REFER TO "THE VERMONT STANDARDS & SPECIFICATIONS FOR EROSION PREVENTION & SEDIMENT CONTROL -2006- "FROM THE VT AGENCY OF NATURAL RESOURCES FOR ADDITIONAL GUIDANCE.

THIS WORK SHALL BE CONSIDERED INCIDENTAL TO THE CONTRACT

REVISIONS	
APRIL 1, 2008	WHF
JANUARY 13, 2009	WHF

PROJECT NAME: NORTH HERO GRAND ISLE BRIDGE
PROJECT NUMBER: BHF 028-1(26)

CHA

FILE NAME: z12b142erodet.dgn
PROJECT LEADER: D. GOZALKOWSKI
DESIGNED BY: J. PARRELLI
EPSC DETAIL SHEET 3

PLOT DATE: 10/7/2016
DRAWN BY: A. KIRBY
CHECKED BY: J. SHIELDS
SHEET 171 OF 172

FILE NAME = V:\Projects\ANY\K3\28173\CADD_MSTN\12b142\Consultants\z12b142erodet.dgn
DATE/TIME = 10/7/2016
USER = 3724

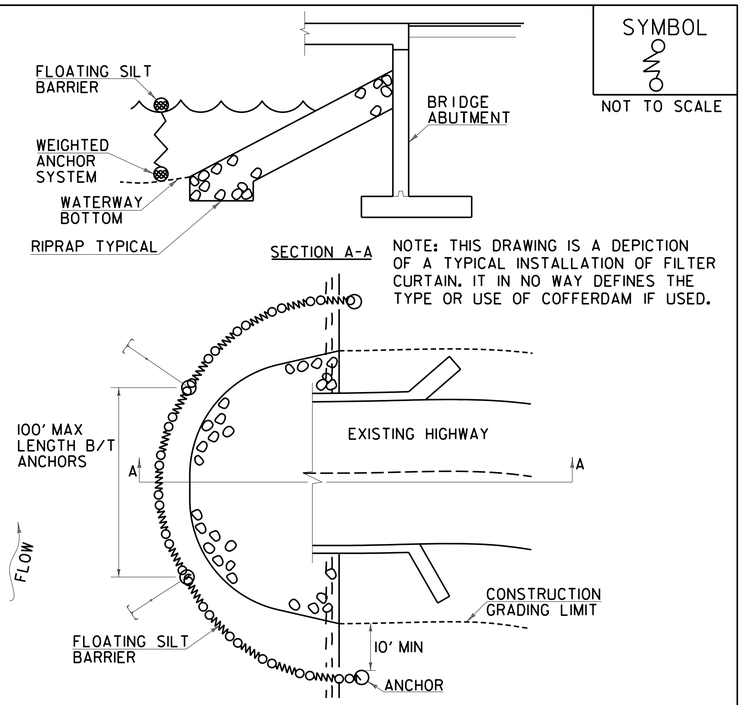

CONSTRUCTION SPECIFICATIONS

1. FILTER CURTAIN SHALL NOT BE PLACED ACROSS A FLOWING WATERWAY, OR IN A WATERWAY WITH STREAM VELOCITIES GREATER THAN 1.5 FEET/SECOND.
2. MAXIMUM 100' LENGTH BETWEEN ANCHORS.
3. LAST SECTION SHALL TERMINATE A MINIMUM OF 10' BEYOND LIMIT OF DISTURBANCE.
4. THE WEIGHTED ANCHOR SYSTEM SHALL BE A TYPE WHICH ALLOWS THE CURTAIN TO CONFORM TO THE BOTTOM OF THE WATERWAY.
5. THE CURTAIN SHALL BE REMOVED BY SLOWLY PULLING TOWARD THE SHORE MINIMIZING THE ESCAPE OF SEDIMENTS INTO WATERWAY.

FILTER CURTAIN

THIS WORK SHALL BE PERFORMED IN ACCORDANCE WITH SECTION 649 FOR GEOTEXTILE FOR FILTER CURTAIN (PAY ITEM 649.61).

REVISIONS	
APRIL 1, 2008	WHF
JANUARY 13, 2009	WHF
SEPTEMBER 4, 2009	WHF

PROJECT NAME: NORTH HERO GRAND ISLE BRIDGE
PROJECT NUMBER: BHF 028-1(26)

FILE NAME: z12b142erodet.dgn
PROJECT LEADER: D. GOZALKOWSKI
DESIGNED BY: J. PARRELLI
EPSC DETAIL SHEET 4

PLOT DATE: 10/7/2016
DRAWN BY: A. KIRBY
CHECKED BY: J. SHIELDS
SHEET 172 OF 172

FILE NAME = V:\Projects\ANY\K3\28173\CADD_MSTN\12b142\Consultants\z12b142erodet.dgn
DATE/TIME = 10/7/2016
USER = 3724