STATE OF VERMONT
AGENCY OF TRANSPORTATION

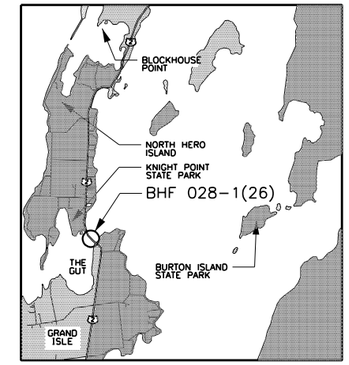

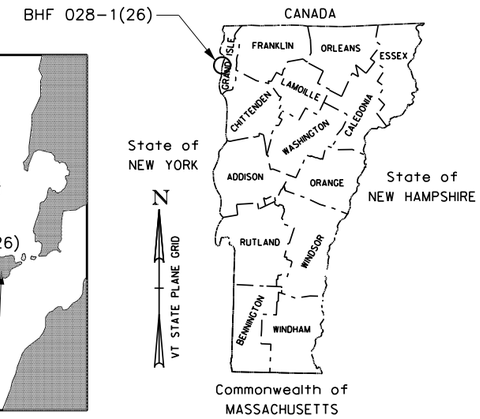

PROPOSED IMPROVEMENT
BRIDGE PROJECT

TOWN OF NORTH HERO – GRAND ISLE

COUNTY OF GRAND ISLE

ROUTE NO : US ROUTE 2 BRIDGE NO : 8

PROJECT LOCATION : LOCATED ON US ROUTE 2, APPROXIMATELY 2,000 FEET NORTH OF THE INTERSECTION OF US ROUTE 2 AND EAST SHORE NORTH OVER LAKE CHAMPLAIN.

PROJECT DESCRIPTION : INSTALL TEMPORARY TRAFFIC CONTROLS, REPLACE BRIDGE #8, AND REMOVE TEMPORARY TRAFFIC CONTROLS.

LENGTH OF STRUCTURE :	260	FEET.
LENGTH OF ROADWAY :	875	FEET.
LENGTH OF PROJECT :	875	FEET.

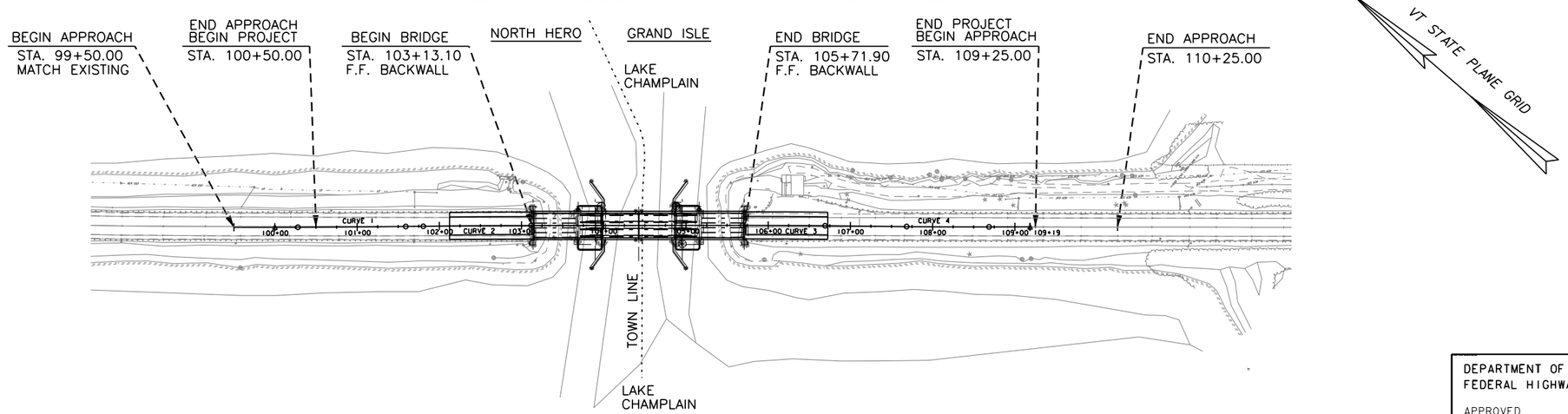

SCALE 1" = 80'-0"
80 0 80

THESE PLANS ARE SUBJECT TO SUCH ENGINEERING CHANGES AS MAY BE REQUIRED BY THE FEDERAL HIGHWAY ADMINISTRATION OR THE DIRECTOR OF PROGRAM DEVELOPMENT.

CONSTRUCTION IS TO BE CARRIED ON IN ACCORDANCE WITH THESE PLANS AND THE STANDARD SPECIFICATIONS FOR CONSTRUCTION DATED 2011, AS APPROVED BY THE FEDERAL HIGHWAY ADMINISTRATION ON JULY 20, 2011 FOR USE ON THIS PROJECT, INCLUDING ALL SUBSEQUENT REVISIONS AND SUCH REVISED SPECIFICATIONS AND SPECIAL PROVISIONS AS ARE INCORPORATED IN THESE PLANS.

QUALITY ASSURANCE PROGRAM : LEVEL

SURVEYED BY :
SURVEYED DATE :

DATUM
VERTICAL
HORIZONTAL

DEPARTMENT OF TRANSPORTATION
FEDERAL HIGHWAY ADMINISTRATOR
APPROVED _____ DATE _____

DIRECTOR OF PROGRAM DEVELOPMENT
APPROVED _____ DATE _____

PROJECT MANAGER :

PROJECT NAME :
PROJECT NUMBER :

SHEET 1 OF 30 SHEETS

STATE OF VERMONT
AGENCY OF TRANSPORTATION

PRELIMINARY INFORMATION SHEET (BRIDGE)

Version
LRFD

INDEX OF SHEETS

PLAN SHEETS

1	TITLE SHEET
2	PRELIMINARY INFORMATION SHEET
3	ROADWAY TYPICAL SECTIONS
4	PROFILE
5	PLAN AND ELEVATION
6 - 7	PIER NO. 1 ELEVATIONS
8	BRIDGE TYPICAL SECTION
9	APPROACH SPAN FRAMING PLAN
10	BASCULE SPAN FRAMING PLAN
11	BASCULE SPAN LONGITUDINAL SECTION
12	BASCULE SPAN TRANSVERSE SECTION
13 - 14	BASCULE SPAN GIRDER DETAILS
15	BASCULE SPAN COUNTERWEIGHT PLAN
16	BASCULE SPAN COUNTERWEIGHT ELEVATION AND SECTION
17	STAGED CONSTRUCTION - PHASE 1 PLAN
18	STAGED CONSTRUCTION - PHASE 1 SECTIONS
19	STAGED CONSTRUCTION - PHASE 2 PLAN
20	STAGED CONSTRUCTION - PHASE 2 SECTIONS
21	STAGED CONSTRUCTION - PHASE 3 PLAN
22	STAGED CONSTRUCTION - PHASE 3 SECTIONS
23	STAGED CONSTRUCTION - PHASE 4 PLAN
24	STAGED CONSTRUCTION - PHASE 4 SECTIONS
25	TRAFFIC CONTROL SHEET
26	RESOURCE SITE PLAN
27	PROPOSED MECHANICAL EQUIPMENT
28	TEMPORARY DRIVE MACHINERY
29	ELECTRICAL PLAN AND ELEVATION
30	ELECTRICAL EQUIPMENT LAYOUT

STRUCTURES DETAIL SHEETS

SD-366.00	LONGSPAN STEEL BEAM GUARDRAIL, GALVANIZED	11/25/2013
SD-501.00	CONCRETE DETAILS AND NOTES	5/7/2010
SD-502.00	CONCRETE DETAILS AND NOTES	5/7/2010
SD-516.10	BRIDGE JOINT ASHPALTIC PLUG	5/7/2010
SD-516.11a	BRIDGE EXPANSION JOINT, VERMONT	2/24/2011
SD-516.11b	BRIDGE EXPANSION JOINT, VERMONT	2/25/2011
SD-601.00	STRUCTURAL STEEL DETAILS AND NOTES	5/7/2010
SD-602.00	STRUCTURAL STEEL PLATE GIRDER DETAILS AND NOTES	5/7/2010

STANDARDS LIST

FINAL HYDRAULIC REPORT

TRAFFIC MAINTENANCE NOTES

1. MAINTAIN ONE-WAY TRAFFIC ON THE EXISTING STRUCTURE.
2. INSTALL AND MAINTAIN TRAFFIC SIGNALS.
3. SIDEWALKS ARE NOT NECESSARY

DESIGN VALUES

1.	DESIGN LIVE LOAD		HL-93
2.	FUTURE PAVEMENT	d_p:	3.0 INCH
3.	ABUTMENT BEARING TO BEARING LENGTH (THREE SPANS) (55.00 - 106.27 - 55.00) FT	L:	216.27 FT
4.	MIN. MID-SPAN POS. CAMBER @ RELEASE (PRESTRESSED UNITS)	Δ:	- - -
5.	PRESTRESSING STRAND	f_y:	- - -
6.	PRESTRESSED CONCRETE STRENGTH	f'_c:	- - -
7.	PRESTRESSED CONCRETE RELEASE STRENGTH	f'_{ci}:	- - -
8.	CONCRETE, HIGH PERFORMANCE CLASS AA	f'_c:	4.0 KSI
9.	CONCRETE, HIGH PERFORMANCE CLASS A	f'_c:	4.0 KSI
10.	CONCRETE, HIGH PERFORMANCE CLASS B	f'_c:	3.5 KSI
11.	CONCRETE, CLASS C	f'_c:	3.0 KSI
12.	REINFORCING STEEL	f_y:	60 KSI
13.	STRUCTURAL STEEL AASHTO M270	f_y:	50 KSI
14.	NOMINAL BEARING RESISTANCE OF SOIL	q_n:	- - -
15.	SOIL BEARING RESISTANCE FACTOR (REFER TO AASHTO LRFD)	ϕ:	- - -
16.	NOMINAL BEARING RESISTANCE OF ROCK	q_n:	- - -
17.	ROCK BEARING RESISTANCE FACTOR (REFER TO AASHTO LRFD)	ϕ:	- - -
18.	PILE RESISTANCE FACTOR	ϕ:	- - -
19.	LATERAL PILE DEFLECTION	Δ:	- - -
20.	BASIC WIND SPEED	V_{3s}:	- - -
21.	MINIMUM GROUND SNOW LOAD	p_g:	- - -
22.	SEISMIC DATA PGA: 0	S_s:	- - -
		S_1:	- - -
23.			
24.			- - -
25.			- - -
26.			- - -

LRFR LOAD RATING FACTORS

LOADING LEVELS	TRUCK						
	H-20	HL-93	3S2	6 AXLE	3A. STR.	4A. STR.	5A. SEMI
TONNAGE	20	36	36	66	30	34.5	38
INVENTORY							
POSTING							
OPERATING							
COMMENTS:							

AS BUILT "REBAR" DETAIL

LEVEL I	LEVEL II	LEVEL III
TYPE:	TYPE:	TYPE:
GRADE:	GRADE:	GRADE:

TRAFFIC DATA

YEAR	ADT	DHV	% D	% T	ADTT
2016	3000	480	65	2.4	140
2026	3200	520	65	3.2	200

20 year ESAL for flexible pavement from 2016 to 2026 : 989000

40 year ESAL for flexible pavement from 2016 to 2056 : 0

Design Speed : 50 mph

PROJECT NAME: **NORTH HERO GRAND ISLE BRIDGE**

PROJECT NUMBER: **BHF 028-1(26)**

FILE NAME:	PI Sheet Builder_v008-13c.xls	PLOT DATE:	7/24/2015
PROJECT LEADER:	C. SWANSON	DRAWN BY:	M. MOZER
DESIGNED BY:	M. MOZER	CHECKED BY:	C. SWANSON
PRELIMINARY INFORMATION SHEET 1		SHEET	2 OF 30

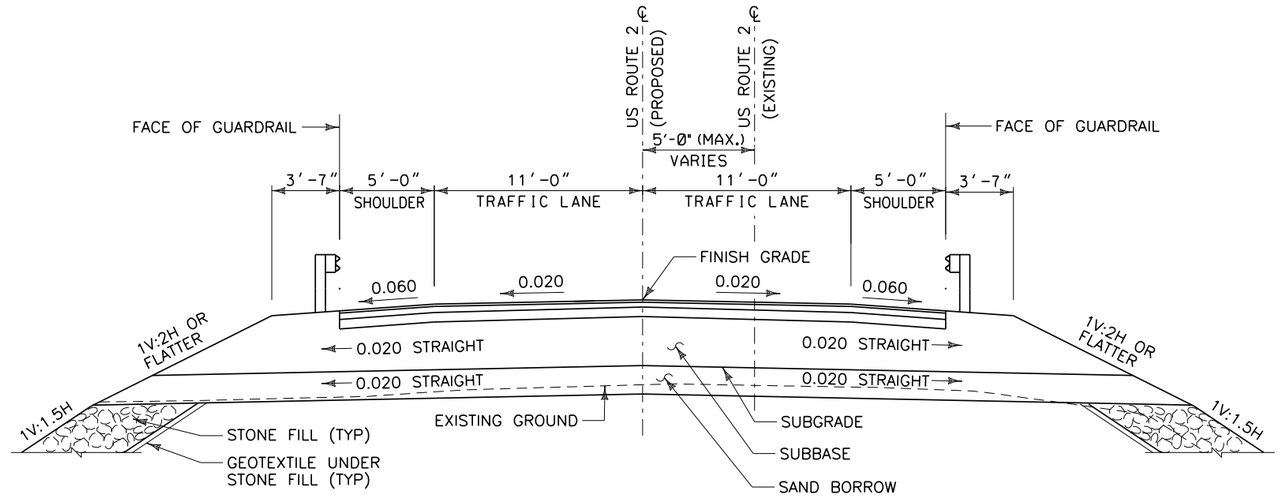

TYPICAL CAUSEWAY BRIDGE APPROACH SECTION

SCALE: 1"=8'-0"

CONCEPTUAL PLANS

SCALE 1" = 20'-0"
20 0 20

PROJECT NAME:	NORTH HERO GRAND ISLE BRIDGE
PROJECT NUMBER:	BHF 028-1(26)

FILE NAME: Z12b142typ_ sec1.dgn	PLOT DATE: 07/28/2015
PROJECT LEADER: C. SWANSON	DRAWN BY: D. DOUGHERTY
DESIGNED BY: C. SWANSON	CHECKED BY: C. SWANSON
TYPICAL BRIDGE SECTIONS 1	SHEET 3 OF 30

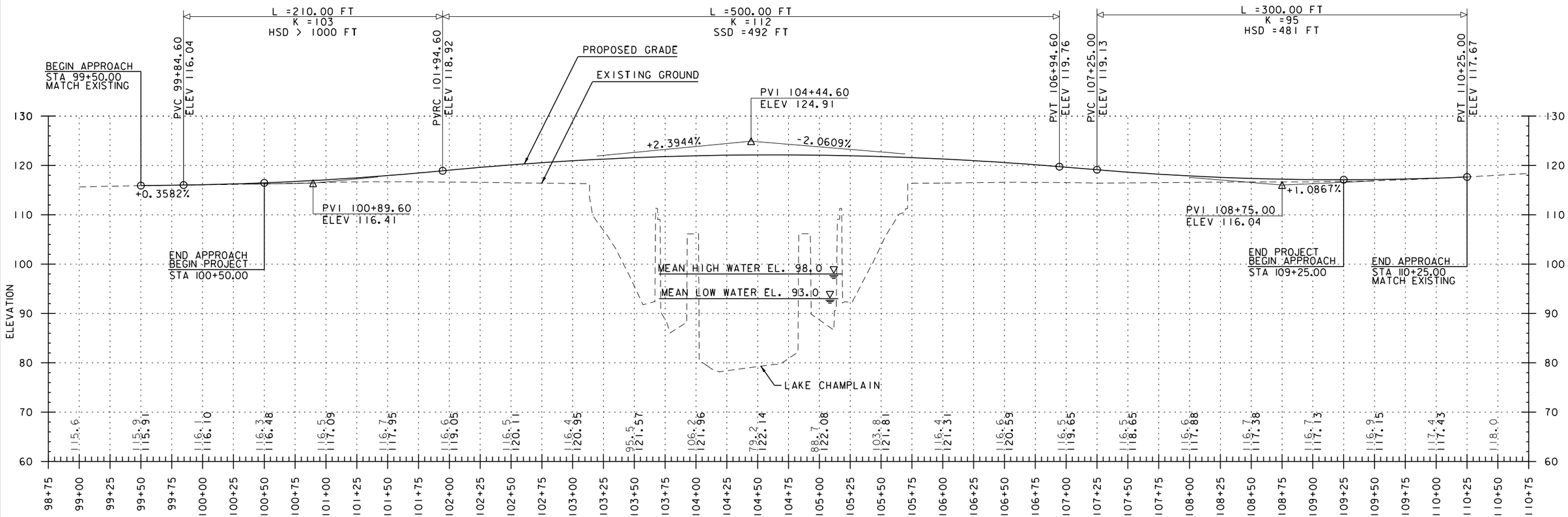

US ROUTE 2 PROFILE

CONCEPTUAL PLANS

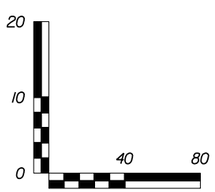

NOTE:

1. THE GRADES SHOWN TO THE NEAREST TENTH ARE THE EXISTING GROUND ELEVATIONS ALONG CENTERLINE. THE GRADES SHOWN TO THE NEAREST HUNDREDTH ARE THE PROPOSED GRADES ALONG CENTERLINE.

FILE NAME = $FILE$
DATE/TIME = 7/29/2015
USER = $NTUSER$

CHA
11 Winners Circle, PO Box 5269 • Albany, NY 12205-0269
Metro (518) 453-4500 • www.chacompanies.com

PROJECT NAME: NORTH HERO GRAND ISLE BRIDGE	
PROJECT NUMBER: BHF 028-1(28)	
FILE NAME: z12b142pro.dgn	PLOT DATE: 7/28/2015
PROJECT LEADER: D.E.G.	DRAWN BY: A.R.K.
DESIGNED BY: J.L.S.	CHECKED BY: J.P.S.
EXISTING AND PROPOSED PROFILE	SHEET 4 OF 30

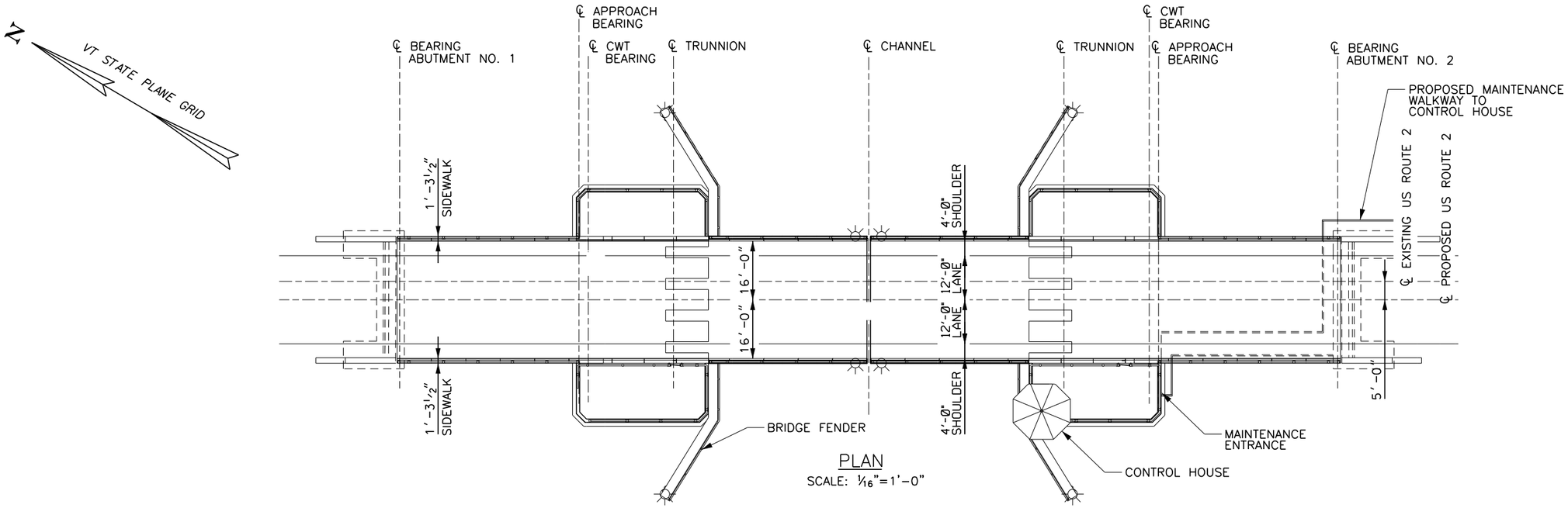

PLAN
SCALE: 1/16"=1'-0"

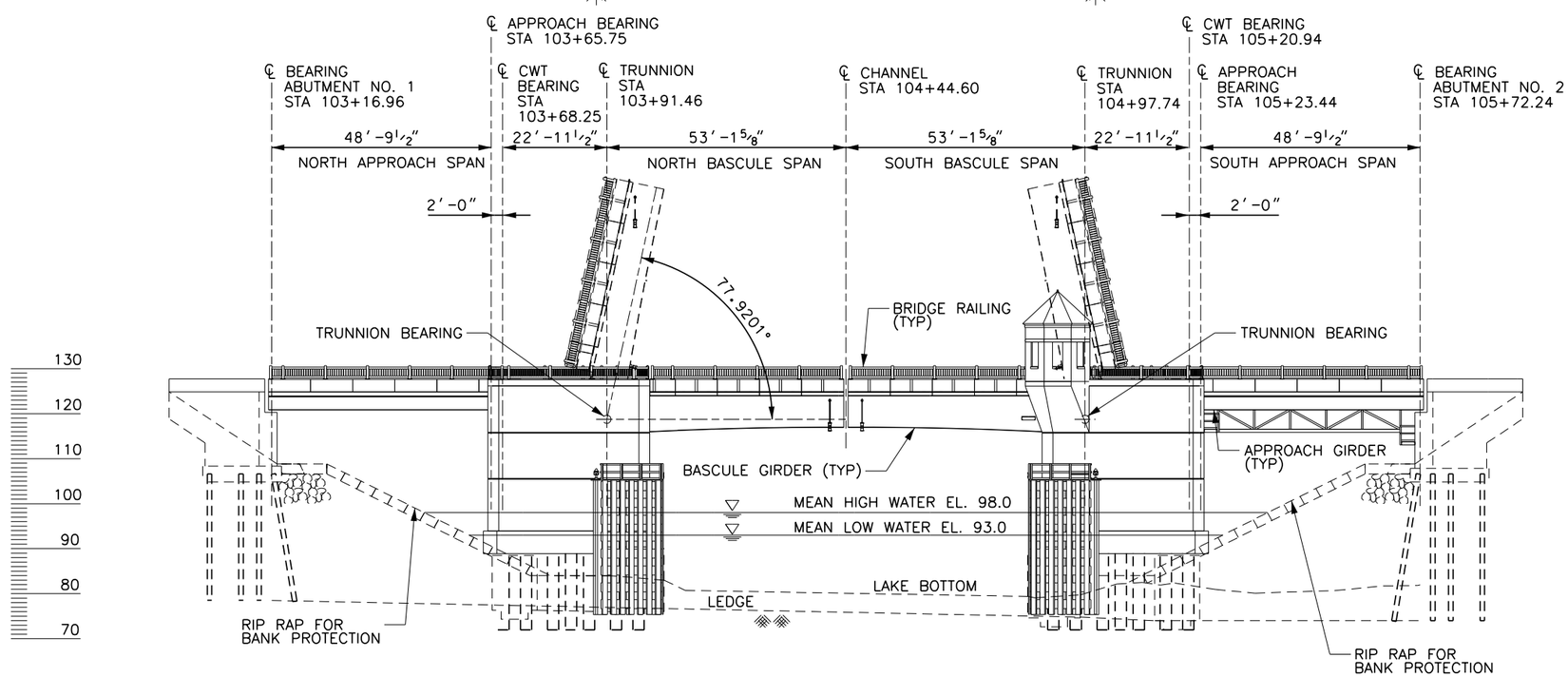

ELEVATION
SCALE: 1/16"=1'-0"

CONCEPTUAL PLANS

HDR

PROJECT NAME: NORTH HERO GRAND ISLE BRIDGE	
PROJECT NUMBER: BHF 028-1(26)	
FILE NAME: z12b142bdr_pe.dgn	PLOT DATE: 7/28/2015
PROJECT LEADER: C. SWANSON	DRAWN BY: P. MONTICCIOLO
DESIGNED BY: H. PROTIN	CHECKED BY: X. XXX
PLAN & ELEVATION	SHEET 5 OF 30

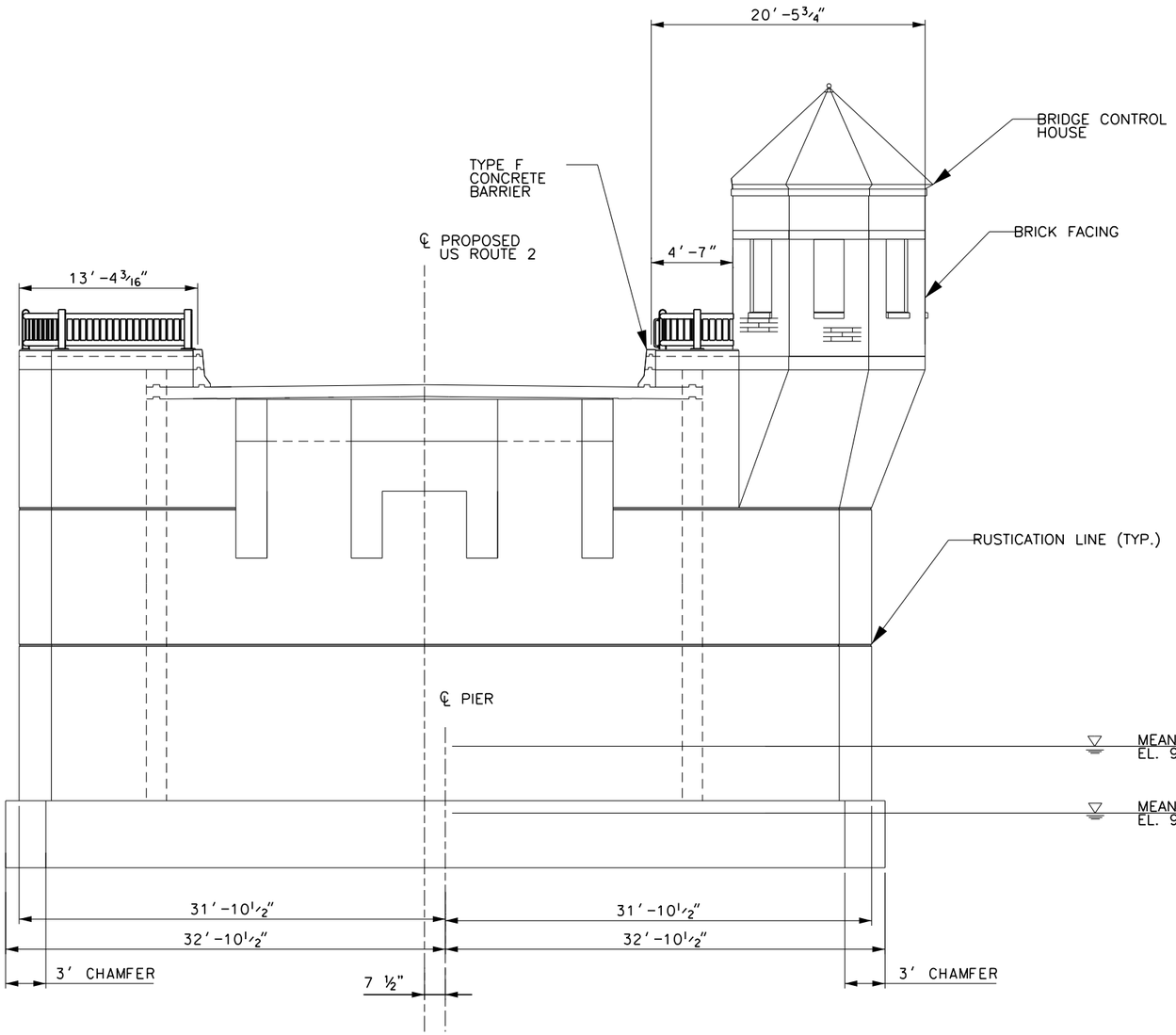

NORTH ELEVATION

SCALE: 3/16″=1′-0″

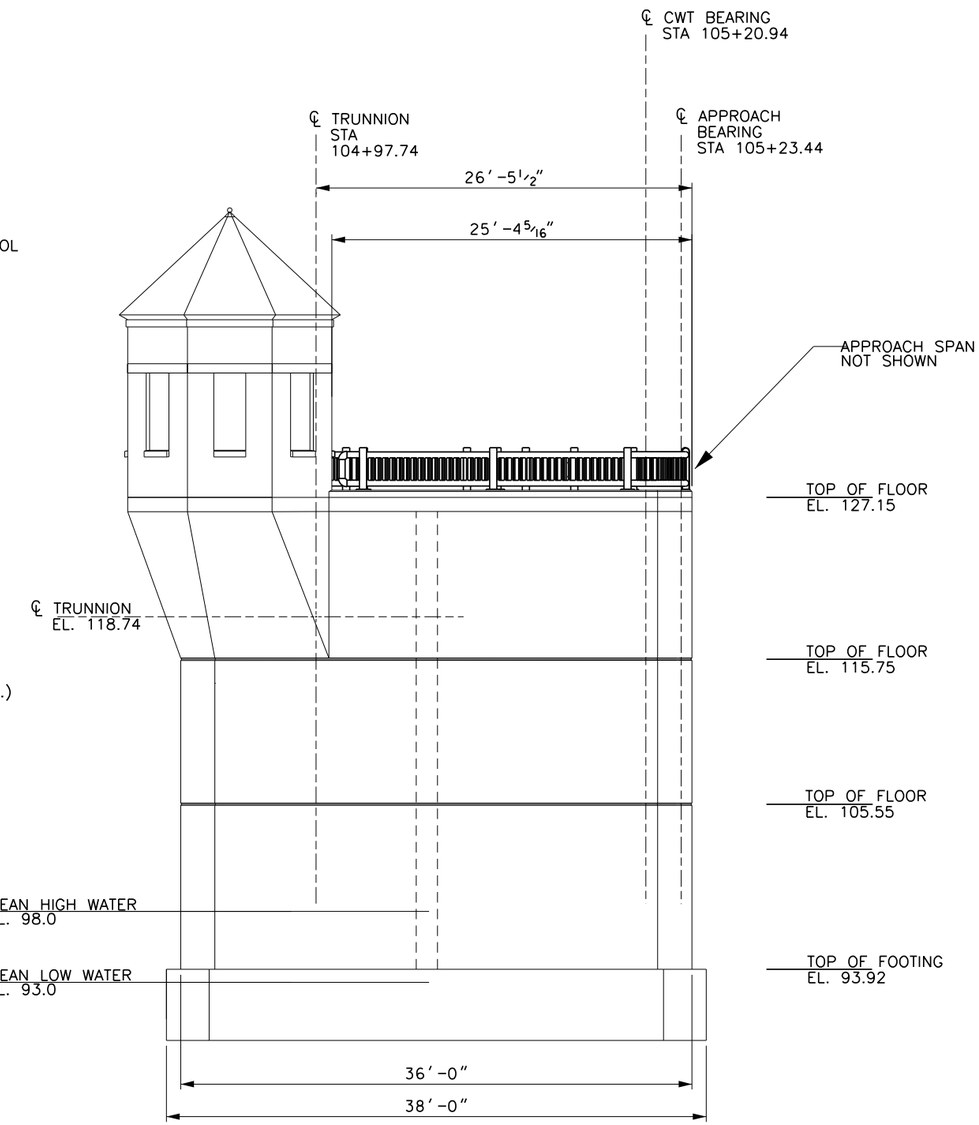

WEST ELEVATION

SCALE: 3/16″=1′-0″

NOTE:

1. FENDER SYSTEM, DRILLED SHAFTS AND MAINTENANCE WALKWAY NOT SHOWN FOR CLARITY

CONCEPTUAL PLANS

PROJECT NAME: NORTH HERO GRAND ISLE BRIDGE	
PROJECT NUMBER: BHF 028-1(26)	
FILE NAME: Z12b142bdr_pier_elev1.dgn	PLOT DATE: 07/28/2015
PROJECT LEADER: C. SWANSON	DRAWN BY: S. SANTRICH
DESIGNED BY: H. PROTIN	CHECKED BY: XXXXXX
South Pier Elevations 1	SHEET 6 OF 30

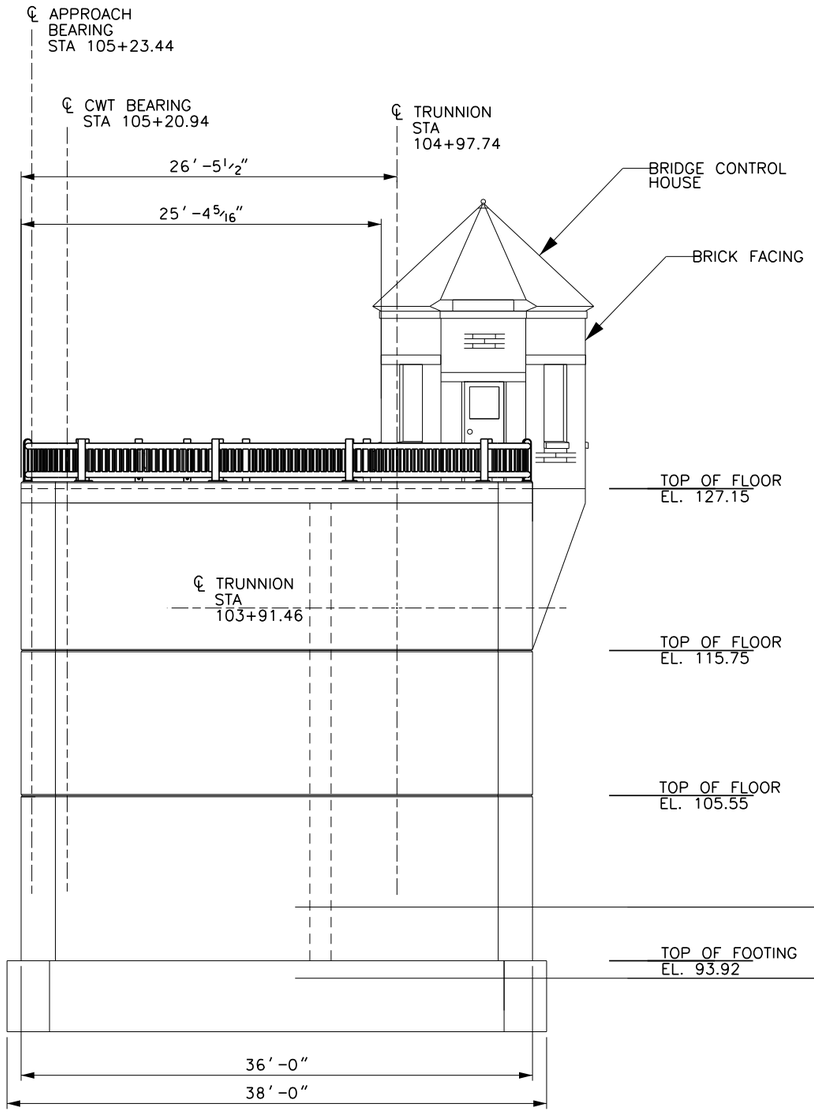

EAST ELEVATION

SCALE: ³⁄₁₆″=1′-0″

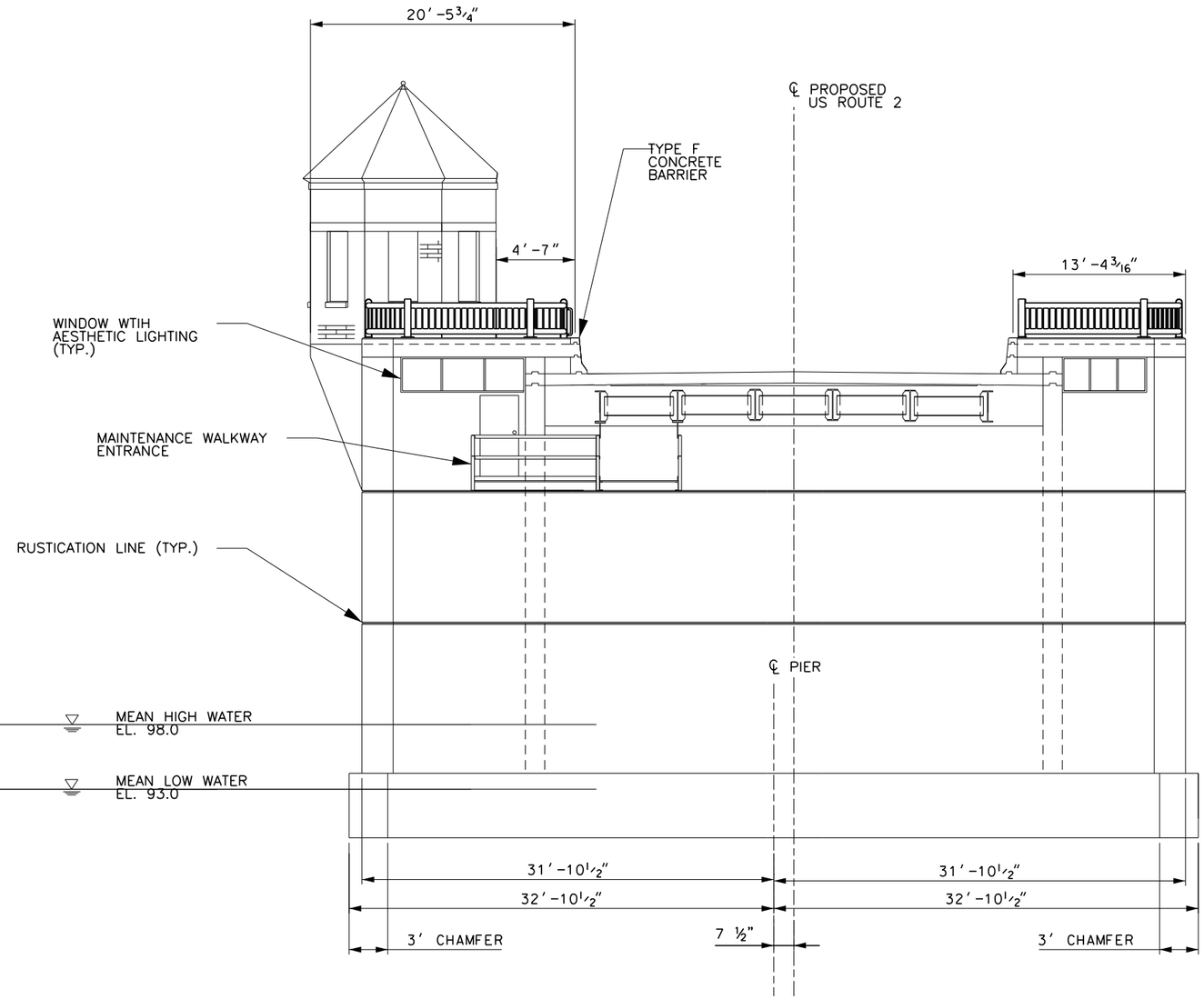

SOUTH ELEVATION

SCALE: ³⁄₁₆″=1′-0″

NOTE:

1. FENDER SYSTEM, APPROACH SPAN AND PILES NOT SHOWN FOR CLARITY.

CONCEPTUAL PLANS

HDR

PROJECT NAME: NORTH HERO GRAND ISLE BRIDGE	
PROJECT NUMBER: BHF 028-1(26)	
FILE NAME: Z12b142bdr_ pier_elev2.dgn	PLOT DATE: 07/28/2015
PROJECT LEADER: C. SWANSON	DRAWN BY: S. SANTRICH
DESIGNED BY: H. PROTIN	CHECKED BY: XXXXXX
South Pier Elevations II	SHEET 7 OF 30

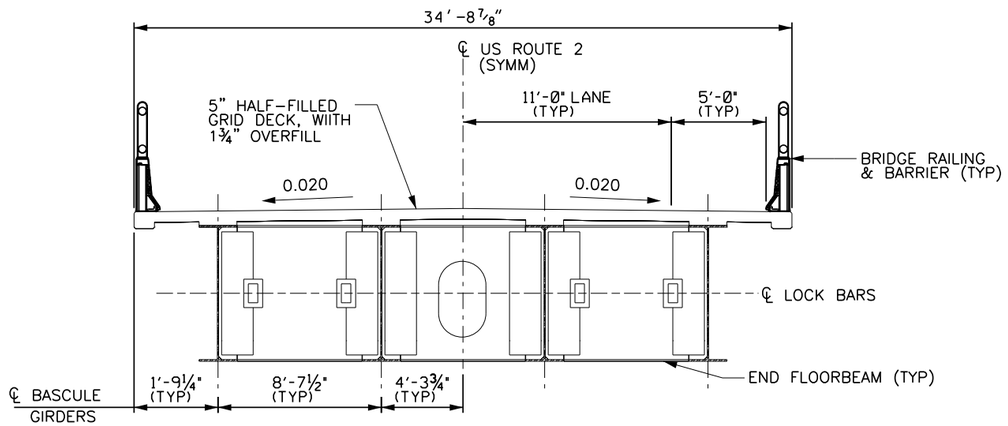

SECTION AT BASCULE SPAN

SCALE: ¼"=1'-0"

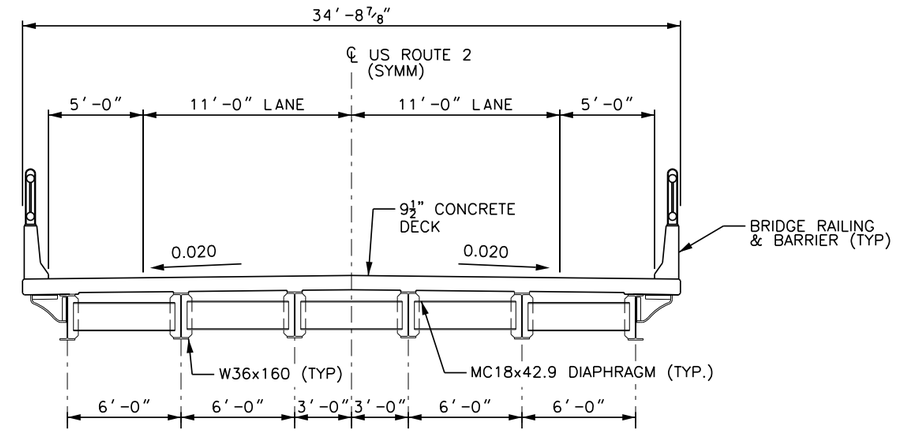

SECTION AT APPROACH SPAN

SCALE: ¼"=1'-0"

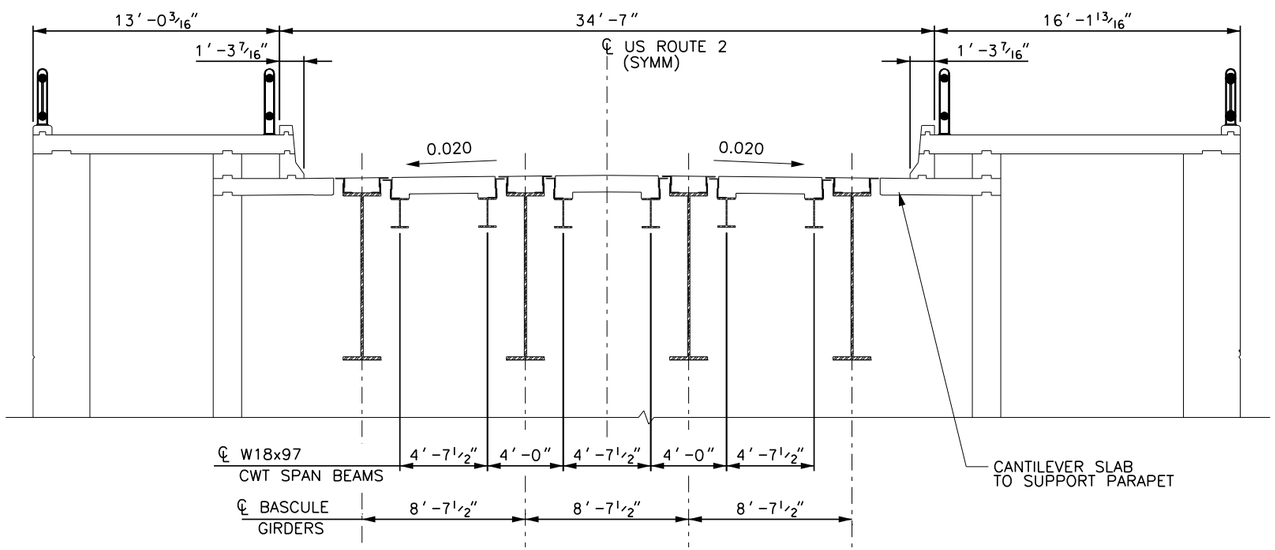

SECTION AT CWT SPAN

SCALE: ¼"=1'-0"

CONCEPTUAL PLANS

PROJECT NAME: NORTH HERO GRAND ISLE BRIDGE	
PROJECT NUMBER: BHF 028-1(26)	
FILE NAME: z12b142bdr_detail1.dgn	PLOT DATE: 7/28/2015
PROJECT LEADER: C. SWANSON	DRAWN BY: C. D'AMBROSIO
DESIGNED BY: H. PROTIN	CHECKED BY: G. NICKELS
BRIDGE TYPICAL SECTIONS	SHEET 8 OF 30

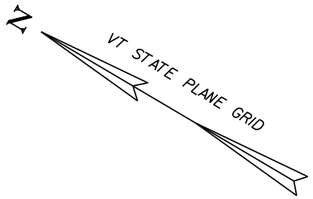

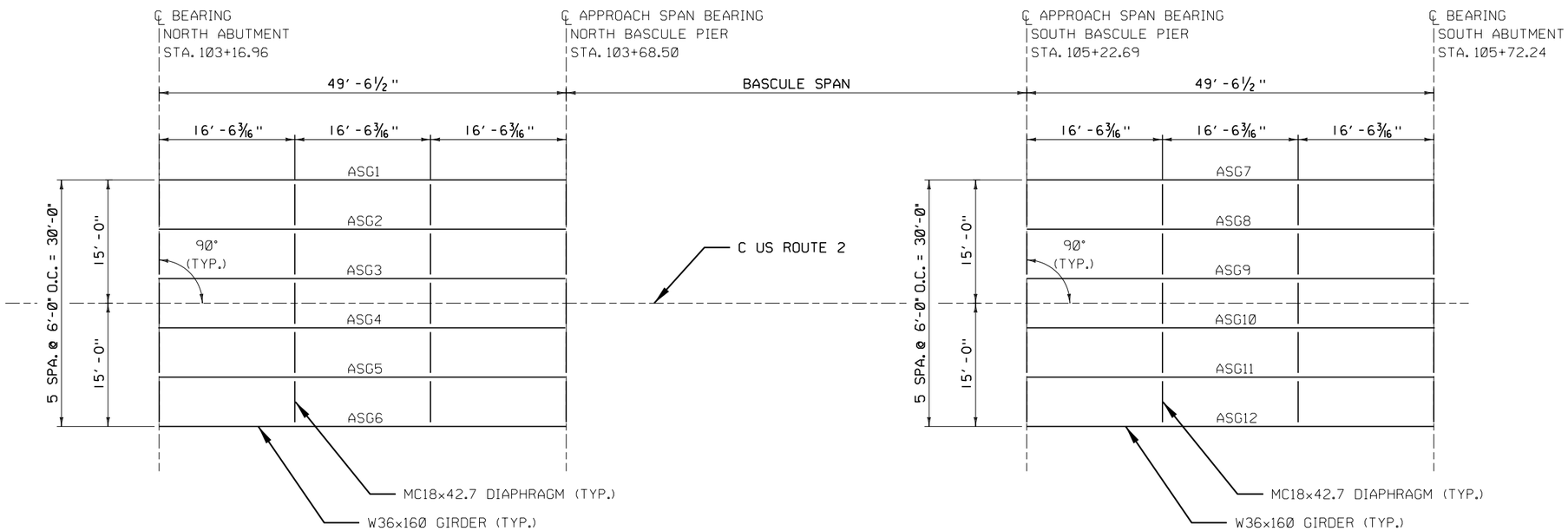

NORTH APPROACH SPAN FRAMING PLAN

SCALE ⅛" = 1'-0"

1 0 2 4 6 8

SOUTH APPROACH SPAN FRAMING PLAN

SCALE ⅛" = 1'-0"

1 0 2 4 6 8

CONCEPTUAL PLANS

HDR

PROJECT NAME: NORTH HERO GRAND ISLE BRIDGE	
PROJECT NUMBER: BHF 028-1(26)	
FILE NAME: Z12b142bdr_ pl2.dgn	PLOT DATE: 7/28/2015
PROJECT LEADER: C. SWANSON	DRAWN BY: K. KRETSCH
DESIGNED BY: C. SWANSON	CHECKED BY: C. SWANSON
APPROACH SPANS FRAMING PLAN	SHEET 9 OF 30

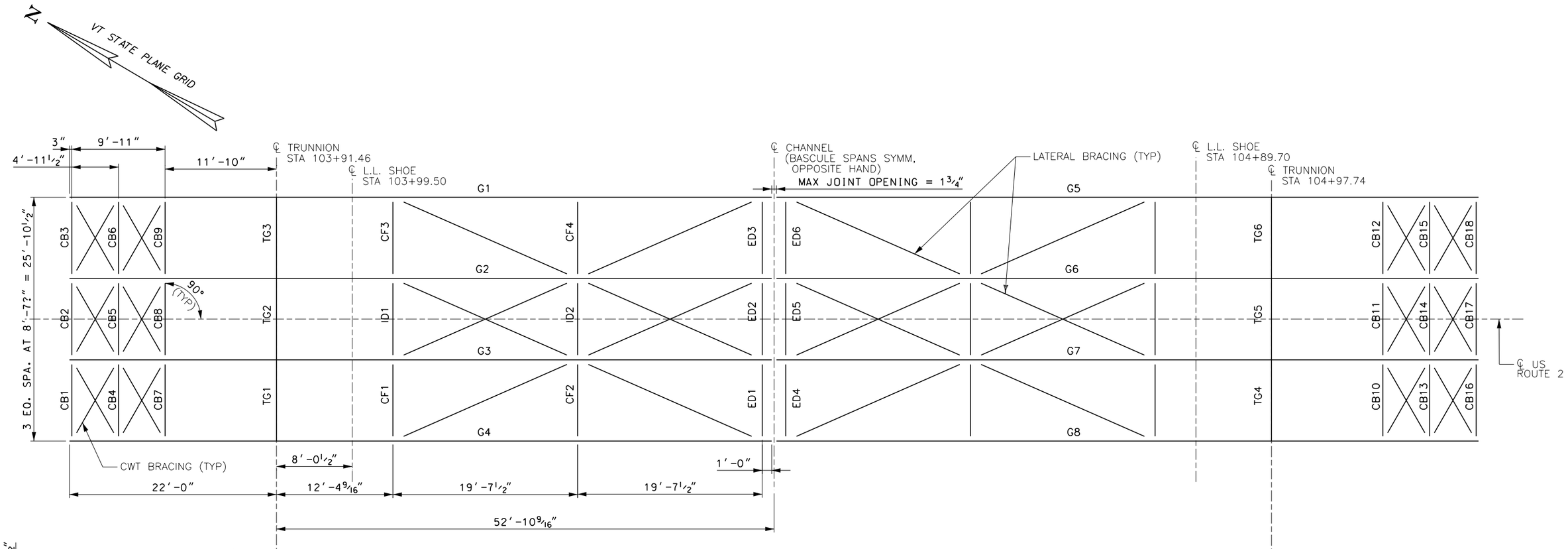

BASCULE SPAN FRAMING PLAN

SCALE: 3/16"=1'-0"

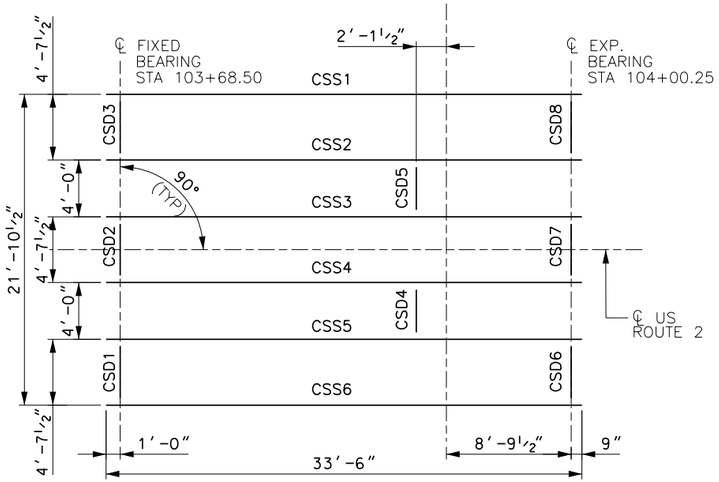

COUNTERWEIGHT SPAN FRAMING PLAN

SCALE: 3/16"=1'-0"

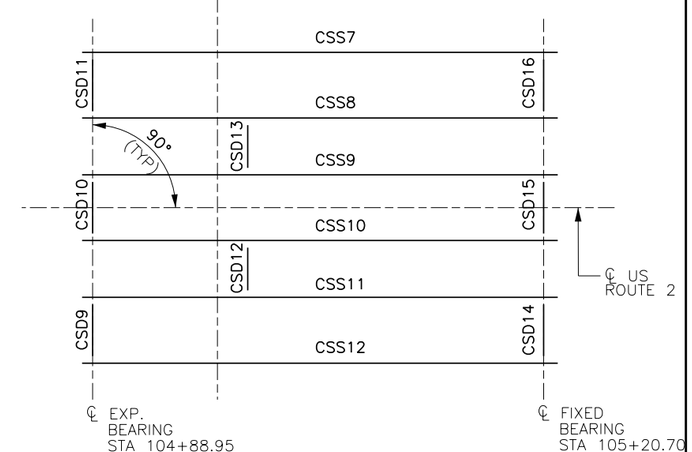

COUNTERWEIGHT SPAN FRAMING PLAN

SCALE: 3/16"=1'-0"

CONCEPTUAL PLANS

HDR

PROJECT NAME: NORTH HERO GRAND ISLE BRIDGE	
PROJECT NUMBER: BHF 028-1(26)	
FILE NAME: z12b142bdr_framing.dgn	PLOT DATE: 7/28/2015
PROJECT LEADER: C. SWANSON	DRAWN BY: C. D'AMBROSIO
DESIGNED BY: H. PROTIN	CHECKED BY: G. NICKELS
BASCULE SPAN FRAMING PLAN	SHEET 10 OF 30

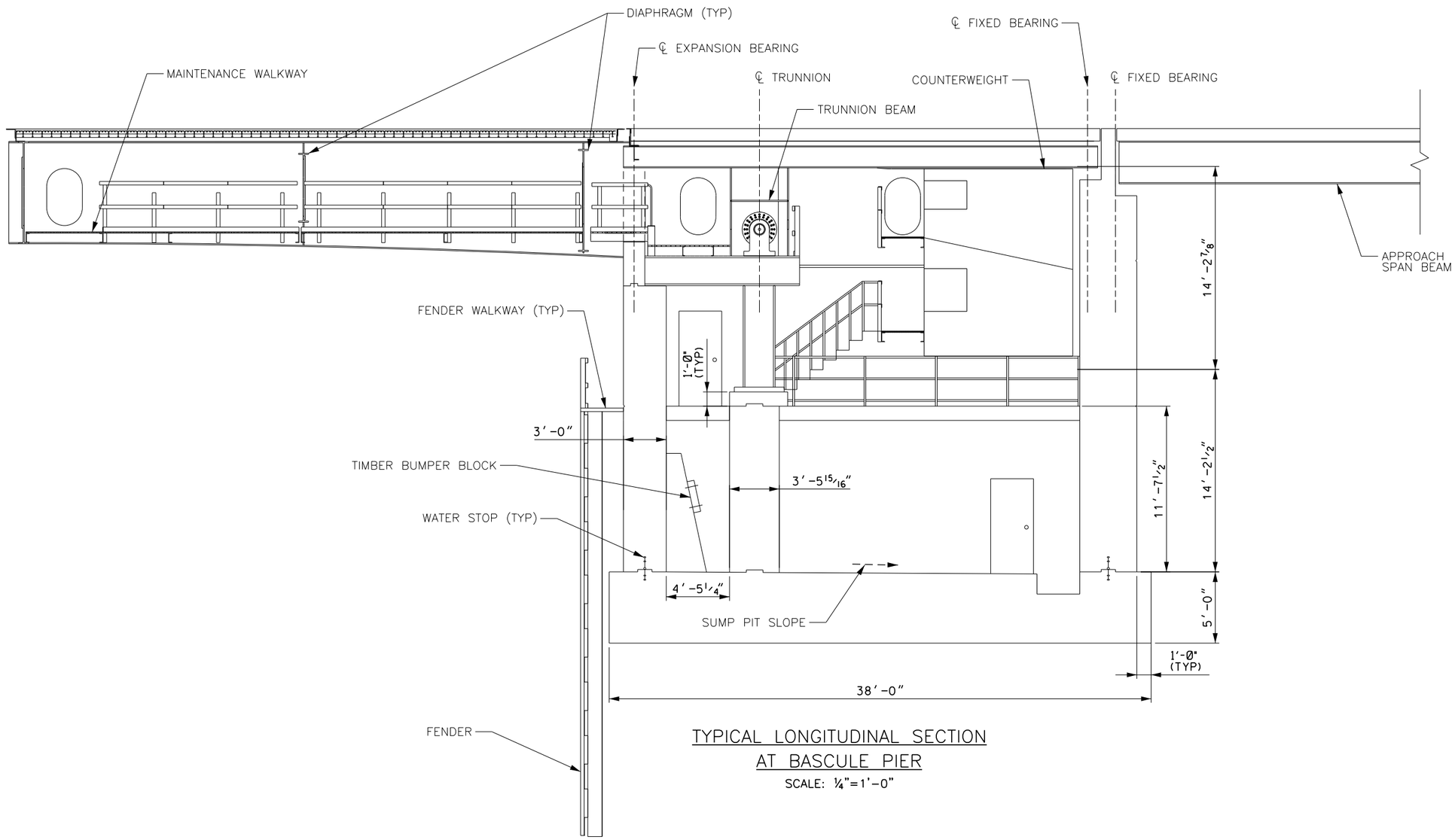

TYPICAL LONGITUDINAL SECTION
AT BASCULE PIER
SCALE: 1/4"=1'-0"

CONCEPTUAL PLANS

PROJECT NAME: NORTH HERO GRAND ISLE BRIDGE	
PROJECT NUMBER: BHF 028-1(26)	
FILE NAME: z12b142bdr_xs1.dgn	PLOT DATE: 07/28/2015
PROJECT LEADER: C. SWANSON	DRAWN BY: S. SANTRICH
DESIGNED BY: H. PROTIN	CHECKED BY: XXXXXX
BASCULE SPAN LONGITUDINAL SECTION	SHEET 11 OF 30

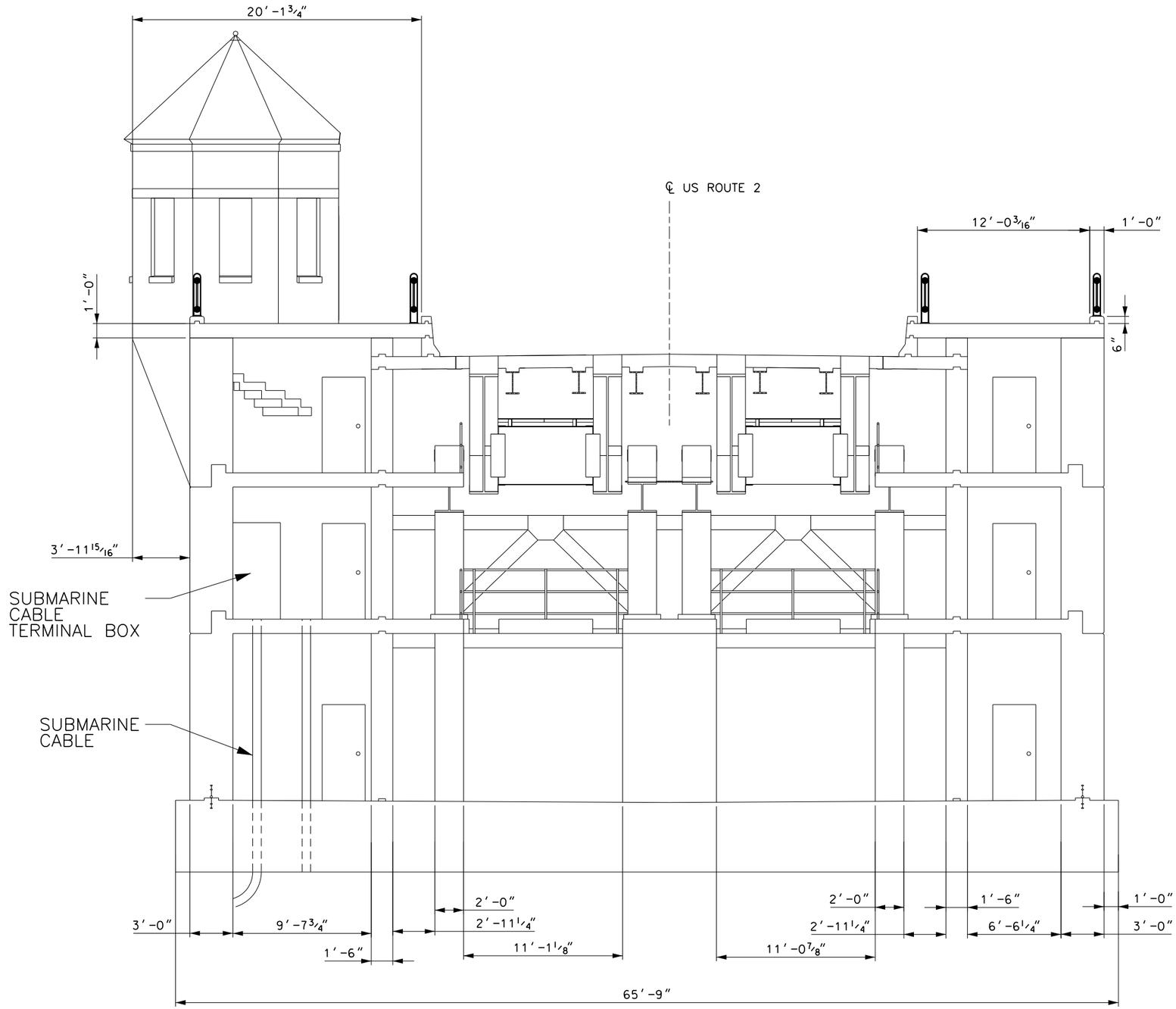

NOTE:
1. FOUNDATION NOT SHOWN FOR CLARITY

TYPICAL TRANSVERSE SECTION
AT BASCULE PIER
SCALE: 1/4"=1'-0"

CONCEPTUAL PLANS

PROJECT NAME: NORTH HERO GRAND ISLE BRIDGE	
PROJECT NUMBER: BHF 028-1(26)	
FILE NAME: z12b142bdr_xs2.dgn	PLOT DATE: 7/28/2015
PROJECT LEADER: C. SWANSON	DRAWN BY: S. SANTRICH
DESIGNED BY: H. PROTIN	CHECKED BY: XXXXX
BASCULE SPAN TRANSVERSE SECTION	SHEET 12 OF 30

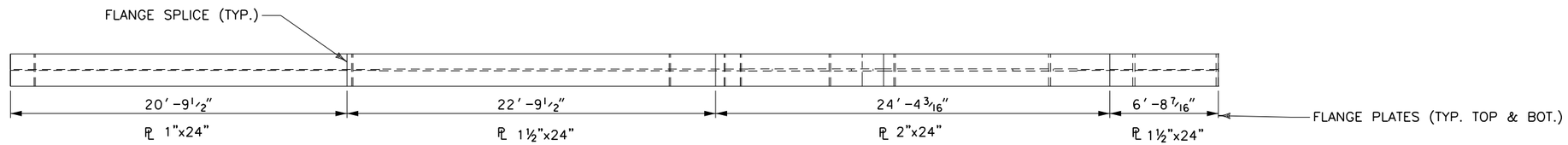

VIEW A–A

SCALE: ¼" = 1'

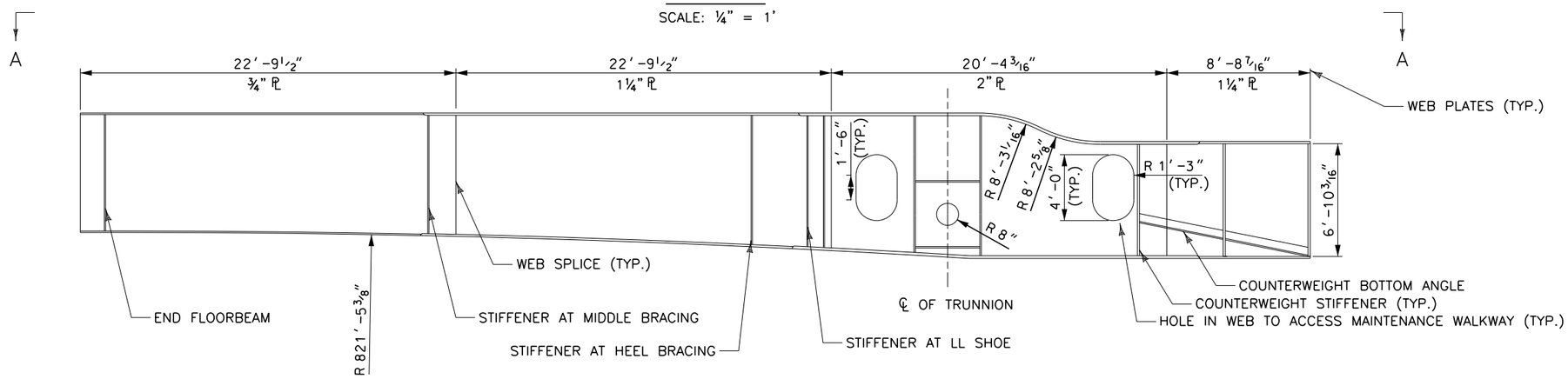

EXTERIOR BASCULE GIRDER ELEVATION

SCALE: ¼" = 1'

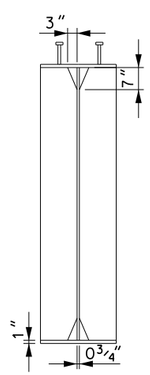

GIRDER SECTION AT MIDDLE BRACING

SCALE: ½" = 1'

CONCEPTUAL PLANS

PROJECT NAME: NORTH HERO GRAND ISLE BRIDGE	
PROJECT NUMBER: BHF 028-1(26)	
FILE NAME: z12b142bdr_girder_details1.dgn	PLOT DATE: 7/28/2015
PROJECT LEADER: C. SWANSON	DRAWN BY: K. PATEL
DESIGNED BY: H. PROTIN	CHECKED BY: C. SWANSON
Bascule Span Girder Details (1of 2)	SHEET 13 OF 30

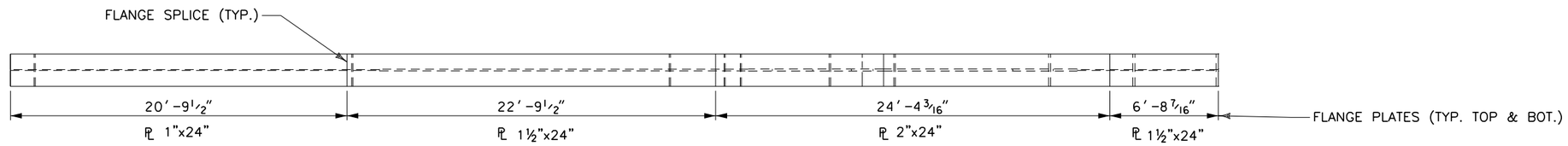

VIEW A–A

SCALE: ¼" = 1'

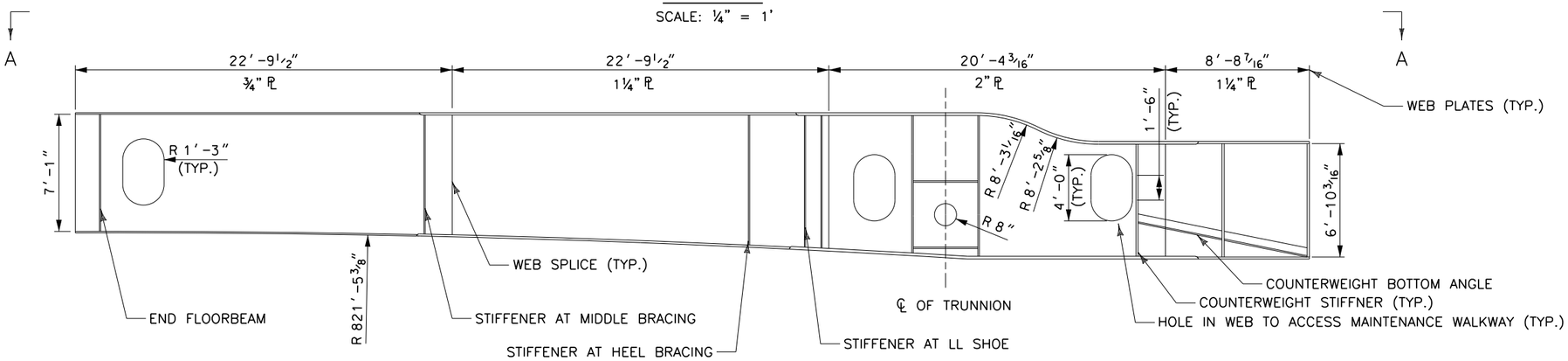

INTERIOR BASCULE GIRDER ELEVATION

SCALE: ¼" = 1'

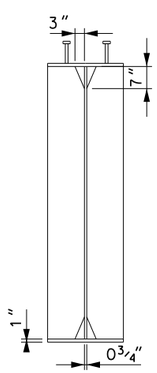

GIRDER SECTION AT MIDDLE BRACING

SCALE: ½" = 1'

CONCEPTUAL PLANS

PROJECT NAME: NORTH HERO GRAND ISLE BRIDGE	
PROJECT NUMBER: BHF 028-1(26)	
FILE NAME: z12b142bdr_girder_details2.dgn	PLOT DATE: 7/28/2015
PROJECT LEADER: C. SWANSON	DRAWN BY: K. PATEL
DESIGNED BY: H. PROTIN	CHECKED BY: C. SWANSON
Bascule Span Girder Details (2 of 2)	SHEET 14 OF 30

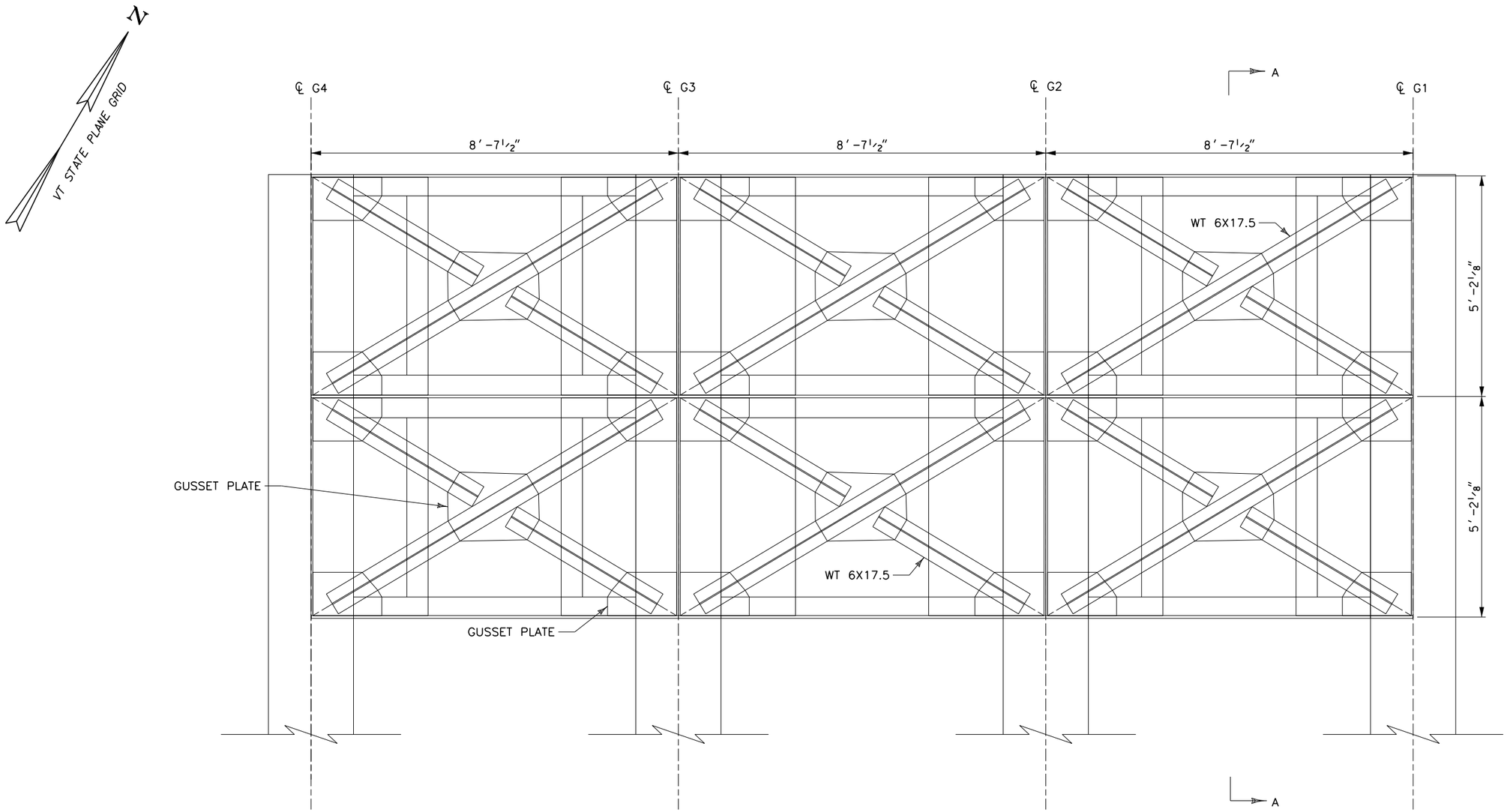

PLAN – UPPER COUNTERWEIGHT

(NORTH COUNTERWEIGHT SHOWN, SOUTH COUNTERWEIGHT OPPOSITE SIDE)

SCALE: ¾" = 1'-0"

NOTES:
1. FOR SECTION A–A, SEE SHEET 16.

CONCEPTUAL PLANS

HDR

PROJECT NAME: NORTH HERO GRAND ISLE BRIDGE	
PROJECT NUMBER: BHF 028-1(26)	
FILE NAME: z12b142bdr_cwt_plan.dgn	PLOT DATE: 7/28/2015
PROJECT LEADER: C. SWANSON	DRAWN BY: K. PATEL
DESIGNED BY: H. PROTIN	CHECKED BY: C. SWANSON
Bascule Span Counterweight Plan	SHEET 15 OF 30

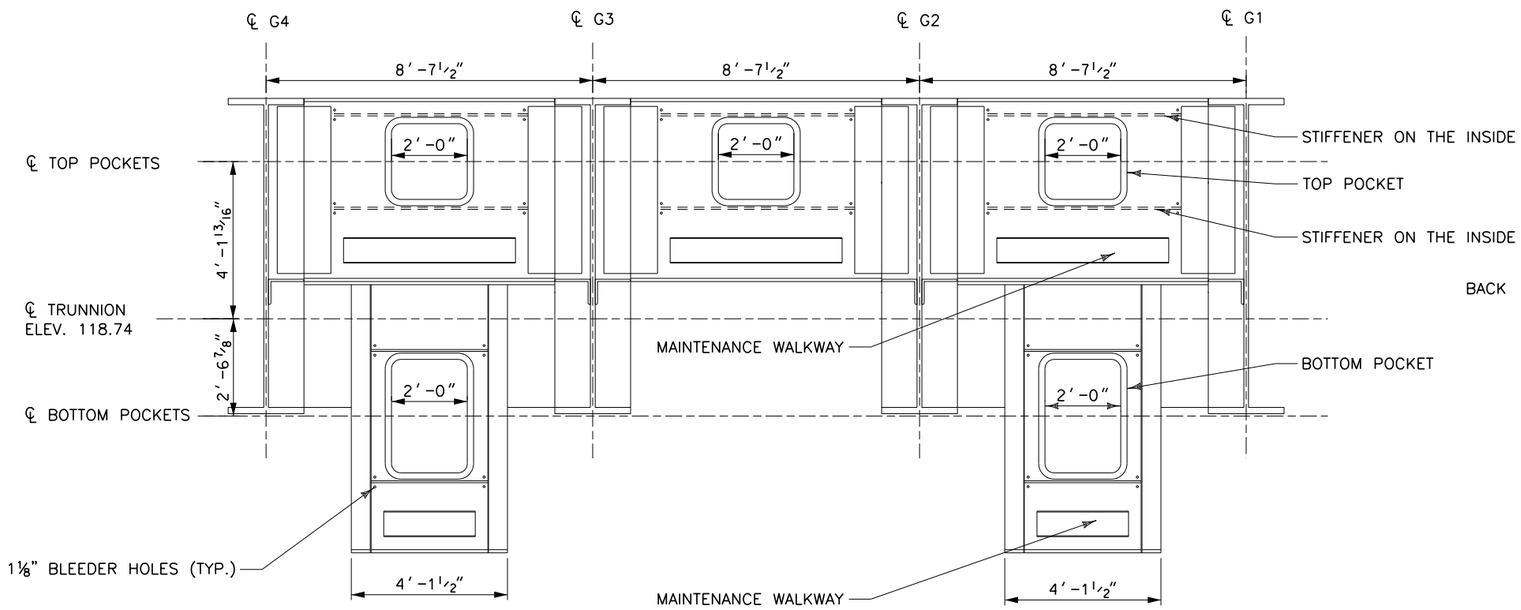

COUNTERWEIGHT ELEVATION

(NORTH COUNTERWEIGHT SHOWN, SOUTH COUNTERWEIGHT OPPOSITE SIDE)

SCALE: ½" = 1'-0"

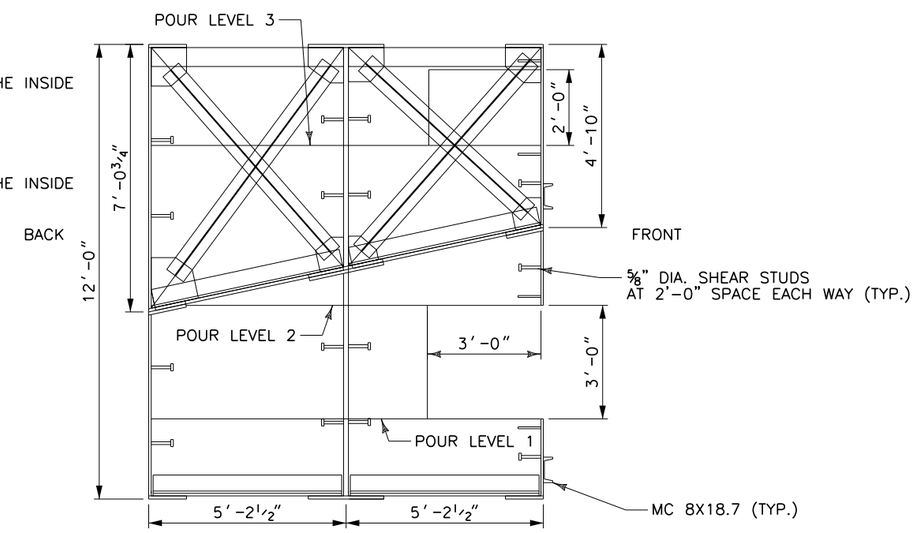

SECTION A–A

SCALE: ½" = 1'-0"

NOTES:
1. FOR LOCATION OF SECTION A–A, SEE SHEET 15.

CONCEPTUAL PLANS

HDR

PROJECT NAME: NORTH HERO GRAND ISLE BRIDGE	
PROJECT NUMBER: BHF 028-1(26)	
FILE NAME: z12b142bdr_cwt_elev.dgn	PLOT DATE: 7/28/2015
PROJECT LEADER: C. SWANSON	DRAWN BY: K. PATEL
DESIGNED BY: H. PROTIN	CHECKED BY: C. SWANSON
Bascule Span Counterweight Elevation	SHEET 16 OF 30

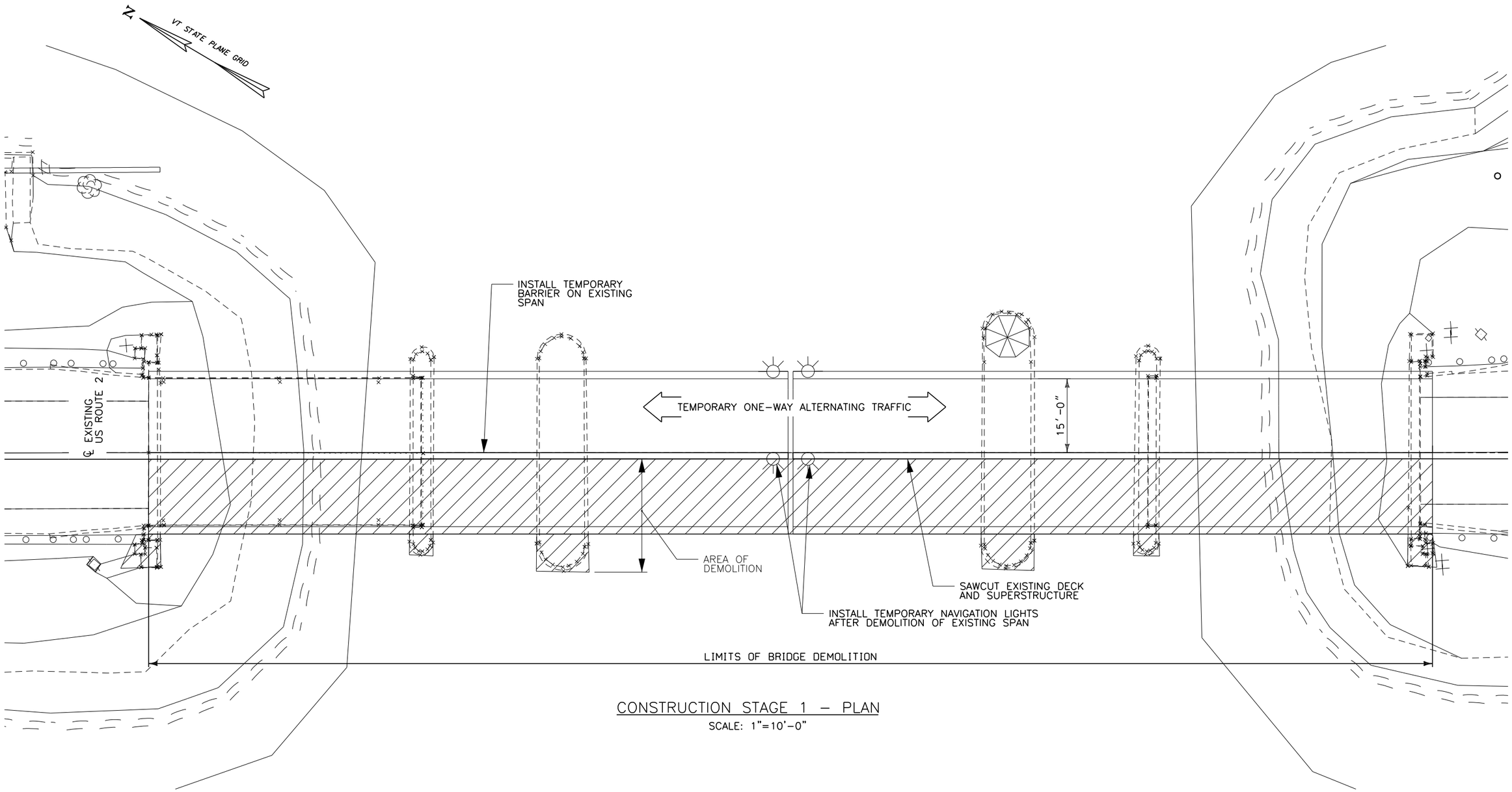

CONSTRUCTION STAGE 1 – PLAN

SCALE: 1"=10'-0"

CONCEPTUAL PLANS

HDR

PROJECT NAME: NORTH HERO GRAND ISLE BRIDGE	
PROJECT NUMBER: BHF 028-1(26)	
FILE NAME: z12b142bdr_cs1.dgn	PLOT DATE: 7/28/2015
PROJECT LEADER: C. SWANSON	DRAWN BY: P. MONTICCIOLO
DESIGNED BY: H. PROTIN	CHECKED BY: G. NICKELS
CONSTRUCTION STAGE 1- PLAN	SHEET 17 OF 30

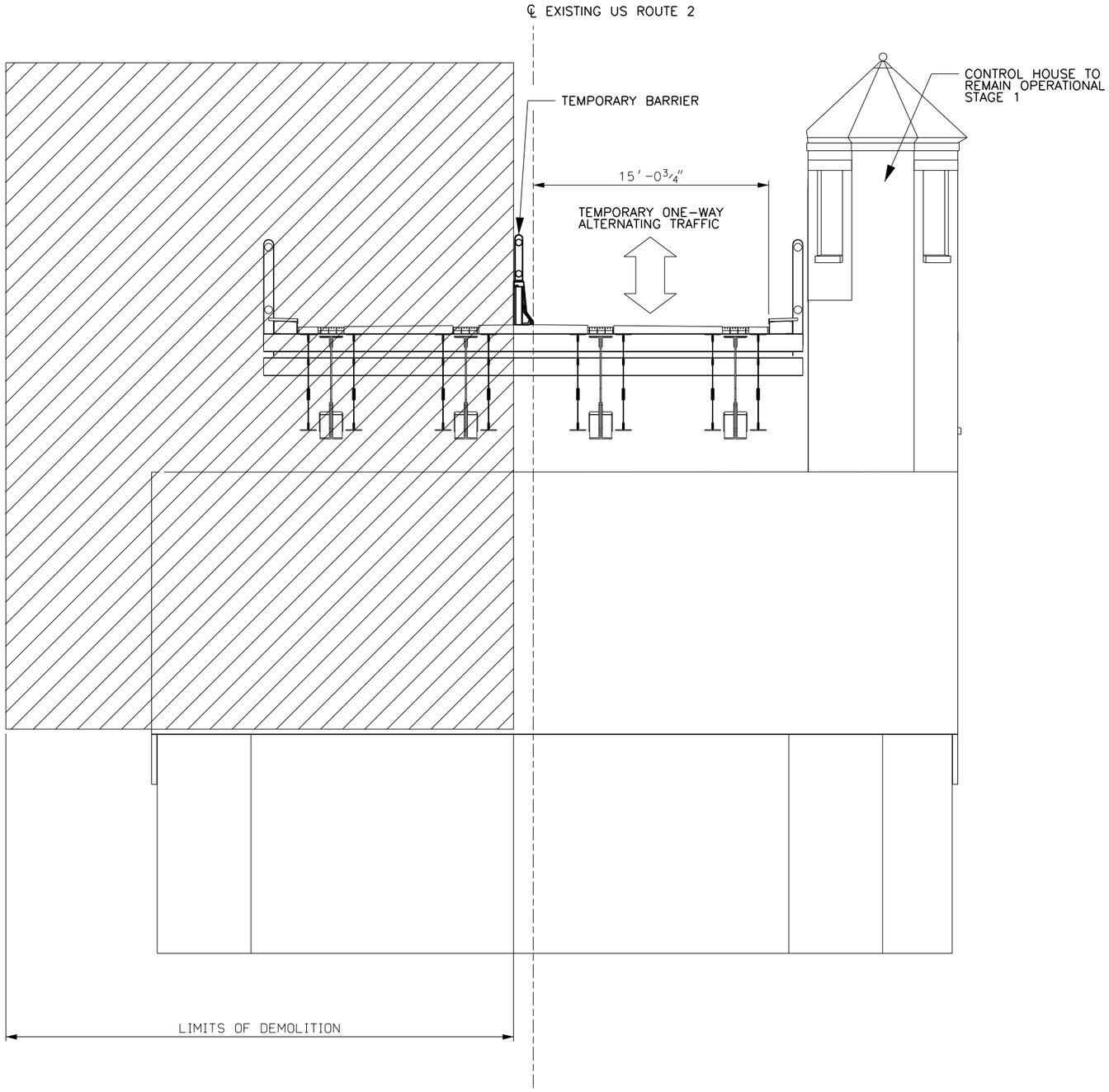

STAGE 1 – TYPICAL CONTERWEIGHT SPAN SECTION

SCALE: ¼"=1'-0"

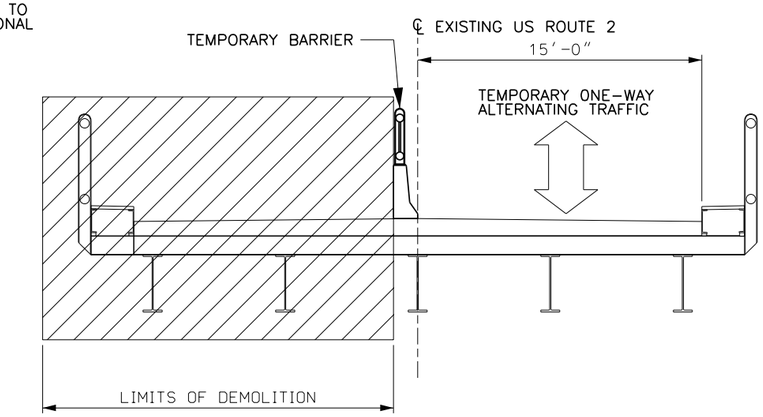

STAGE 1 – TYPICAL APPROACH SPAN SECTION

SCALE: ¼"=1'-0"

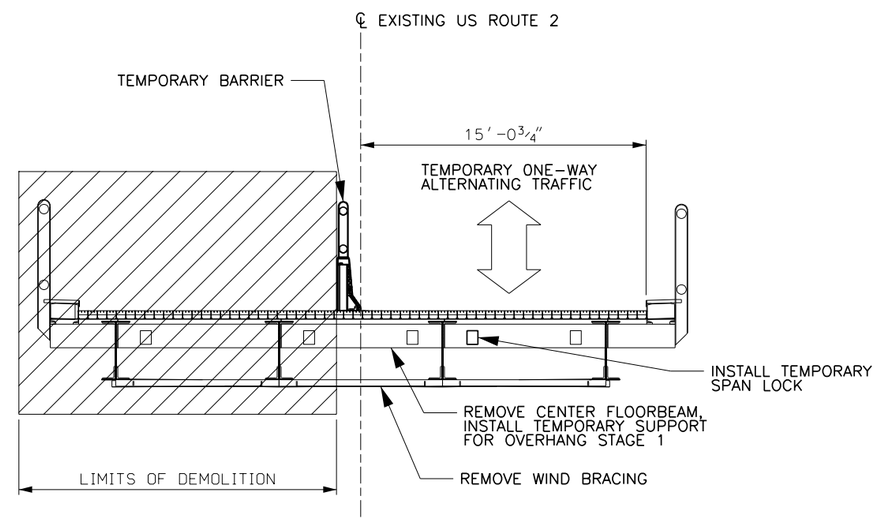

STAGE 1 – TYPICAL BASCULE SPAN SECTION

SCALE: ¼"=1'-0"

CONCEPTUAL PLANS

PROJECT NAME: NORTH HERO GRAND ISLE BRIDGE	
PROJECT NUMBER: BHF 028-1(26)	
FILE NAME: z12b142bdr_xcs1.dgn	PLOT DATE: 7/28/2015
PROJECT LEADER: C. SWANSON	DRAWN BY: P. MONTICCIOLO
DESIGNED BY: H. PROTIN	CHECKED BY: G. NICKELS
CONSTRUCTION STAGE 1- SECTIONS	SHEET 18 OF 30

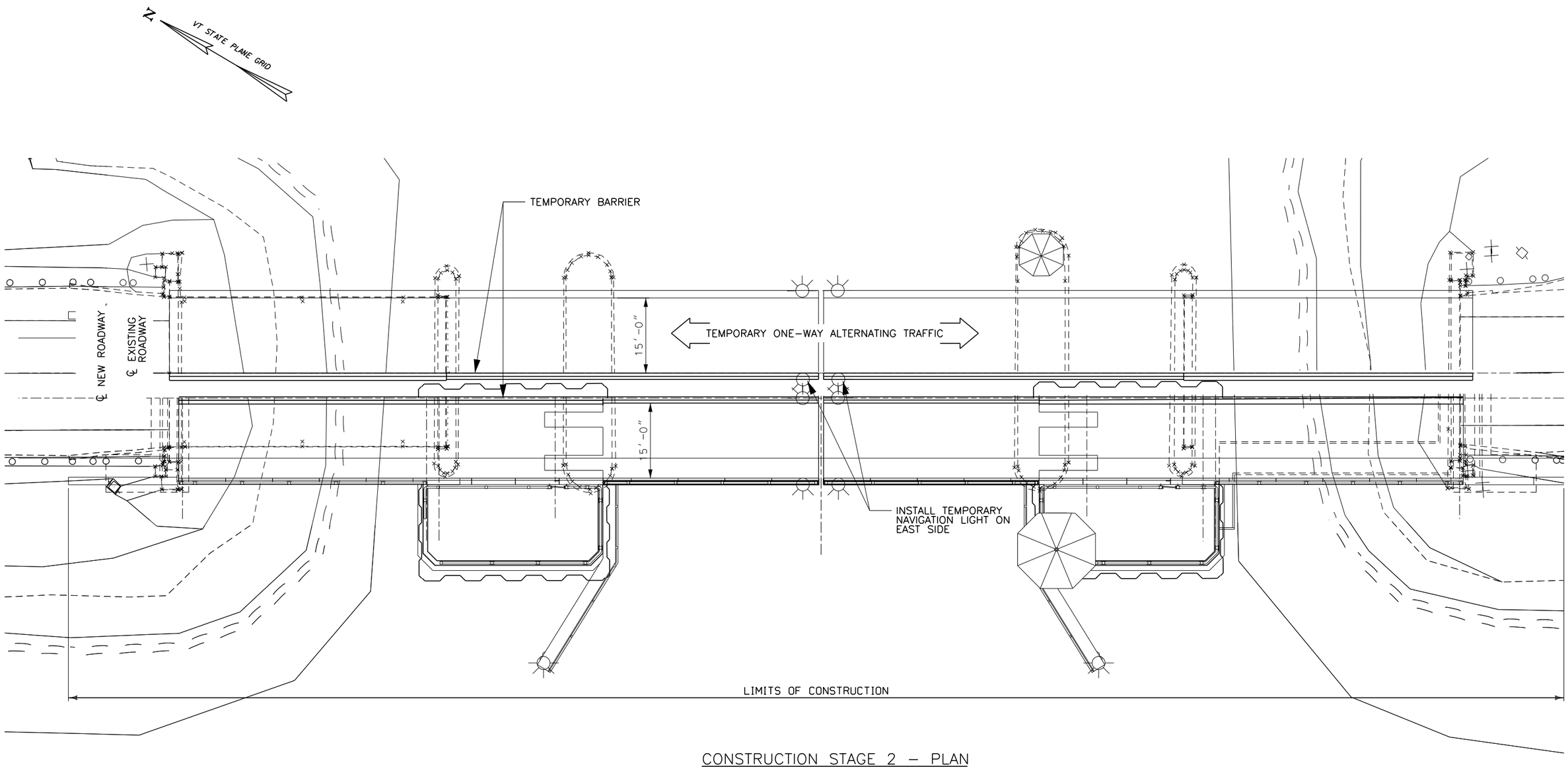

CONSTRUCTION STAGE 2 – PLAN

SCALE: 1"=10'-0"

CONCEPTUAL PLANS

PROJECT NAME: NORTH HERO GRAND ISLE BRIDGE	
PROJECT NUMBER: BHF 028-1(26)	
FILE NAME: z12b142bdr_cs2.dgn	PLOT DATE: 7/28/2015
PROJECT LEADER: C. SWANSON	DRAWN BY: D. DOUGHERTY
DESIGNED BY: C. SWANSON	CHECKED BY: C. SWANSON
CONSTRUCTION STAGE 2 - PLAN	SHEET 19 OF 30

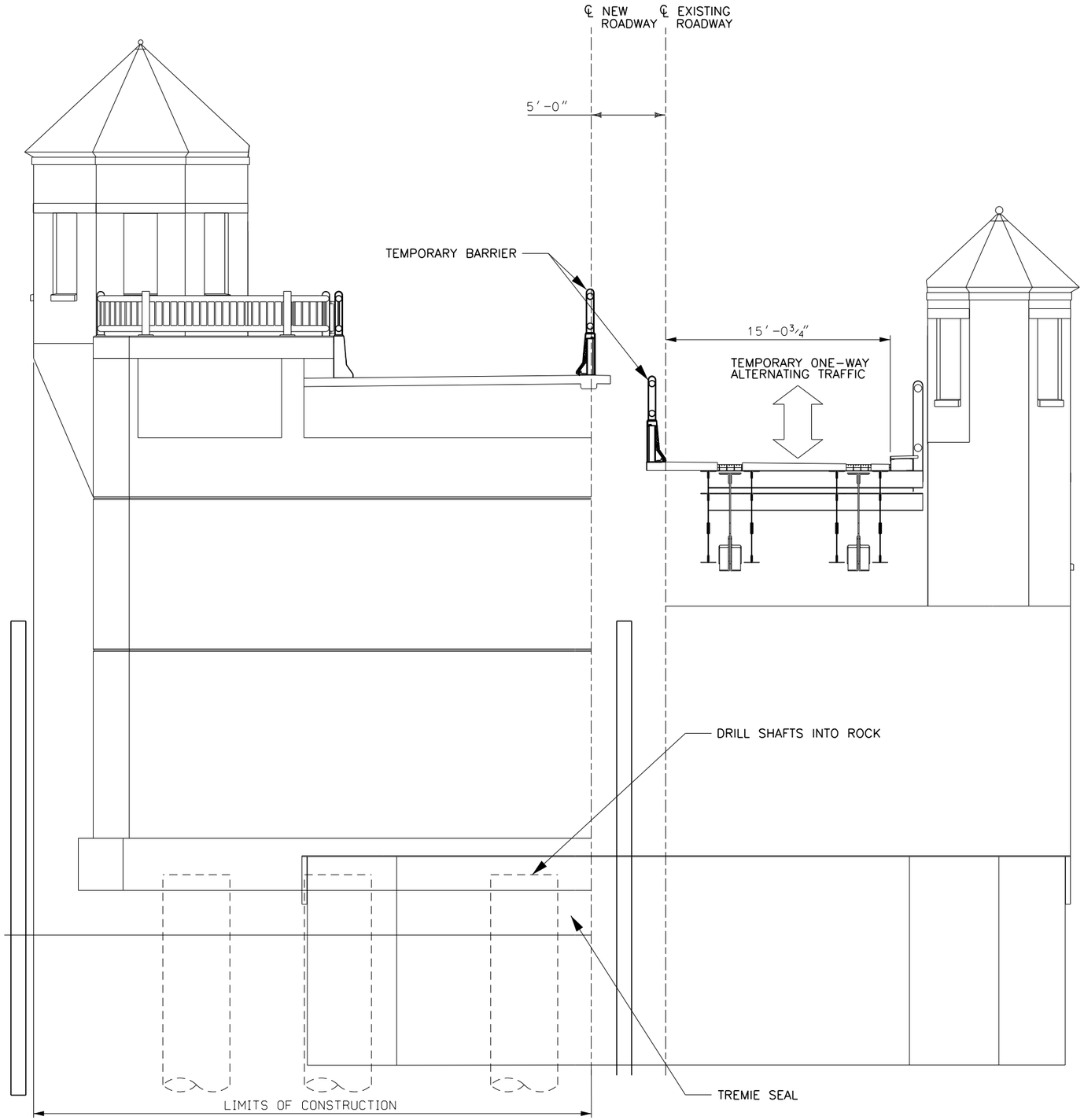

STAGE 2 – TYPICAL CONTERWEIGHT SPAN SECTION

SCALE: ¼"=1'-0"

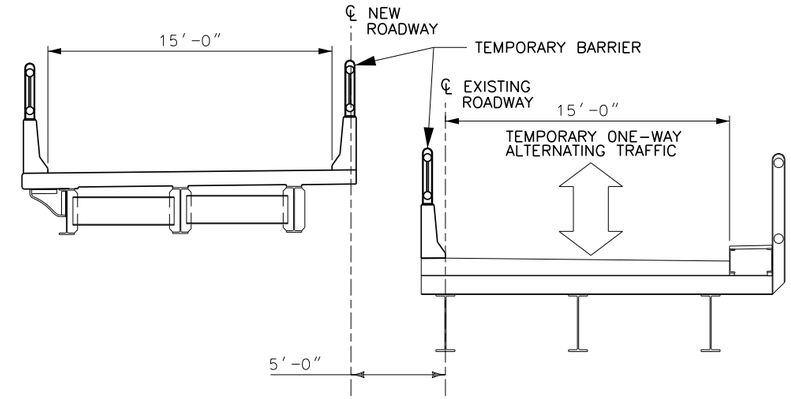

STAGE 2 – TYPICAL APPROACH SPAN SECTION

SCALE: ¼"=1'-0"

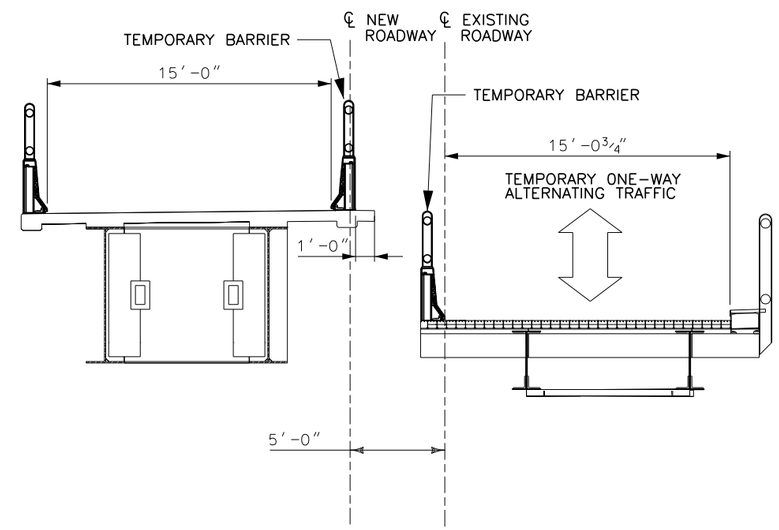

STAGE 2 – TYPICAL BASCULE SPAN SECTION

SCALE: ¼"=1'-0"

CONCEPTUAL PLANS

PROJECT NAME: NORTH HERO GRAND ISLE BRIDGE	
PROJECT NUMBER: BHF 028-1(26)	
FILE NAME: z12b142bdr_xscs2.dgn	PLOT DATE: 7/28/2015
PROJECT LEADER: C. SWANSON	DRAWN BY: P. MONTICCIOLO
DESIGNED BY: H. PROTIN	CHECKED BY: G. NICKELS
CONSTRUCTION STAGE 2 - SECTIONS	SHEET 20 OF 30

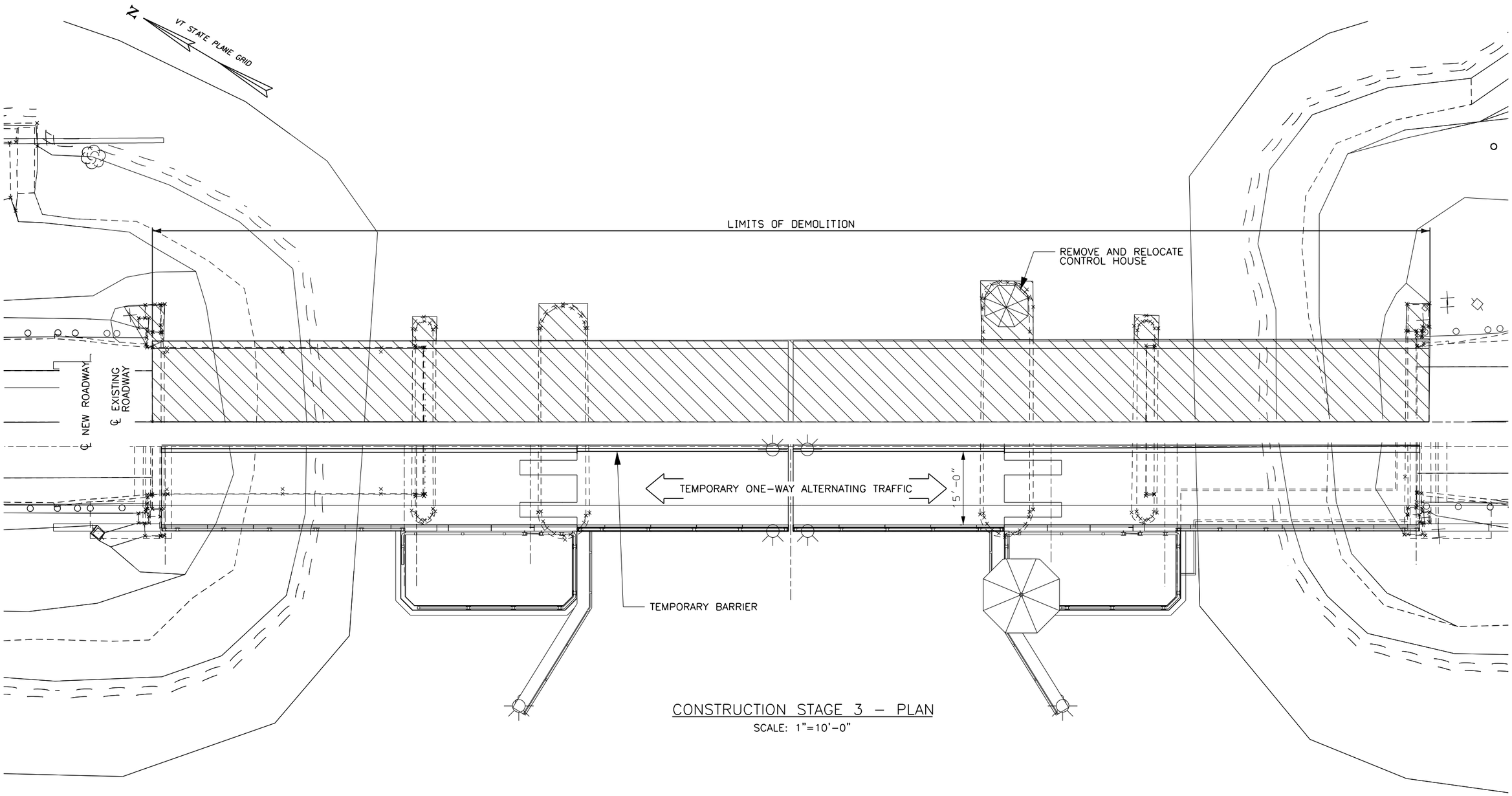

CONSTRUCTION STAGE 3 – PLAN

SCALE: 1"=10'-0"

CONCEPTUAL PLANS

HDR

PROJECT NAME: NORTH HERO GRAND ISLE BRIDGE	
PROJECT NUMBER: BHF 028-1(26)	
FILE NAME: z12b142bdr_cs3.dgn	PLOT DATE: 7/28/2015
PROJECT LEADER: C. SWANSON	DRAWN BY: P. MONTICCIOLO
DESIGNED BY: H. PROTIN	CHECKED BY: C. SWANSON
CONSTRUCTION STAGE 3 - PLAN	SHEET 21 OF 30

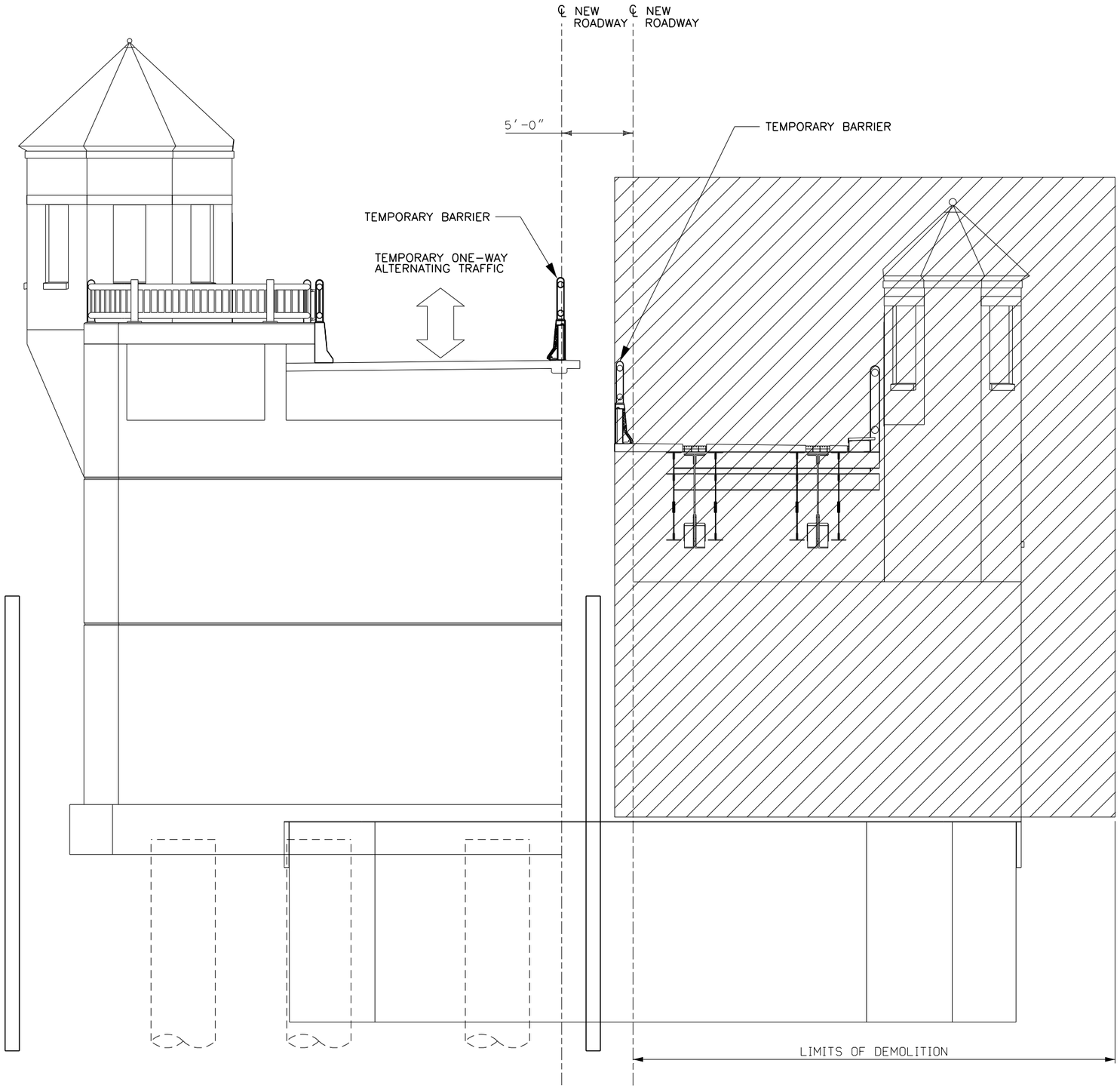

STAGE 3 – TYPICAL CONTERWEIGHT SPAN SECTION

SCALE: ¼"=1'-0"

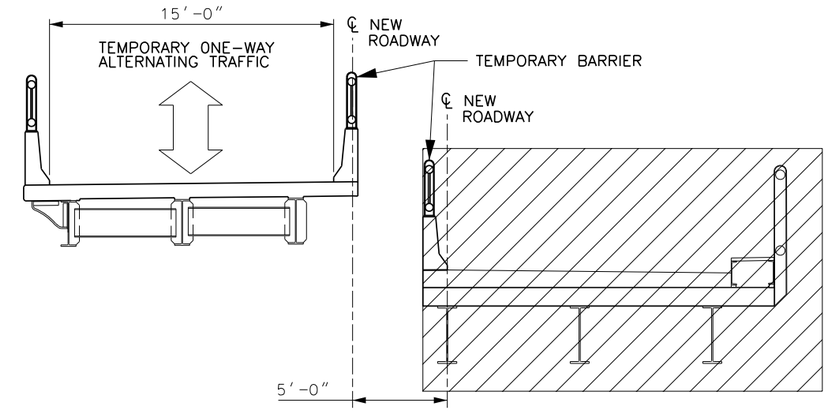

STAGE 3 – TYPICAL APPROACH SPAN SECTION

SCALE: ¼"=1'-0"

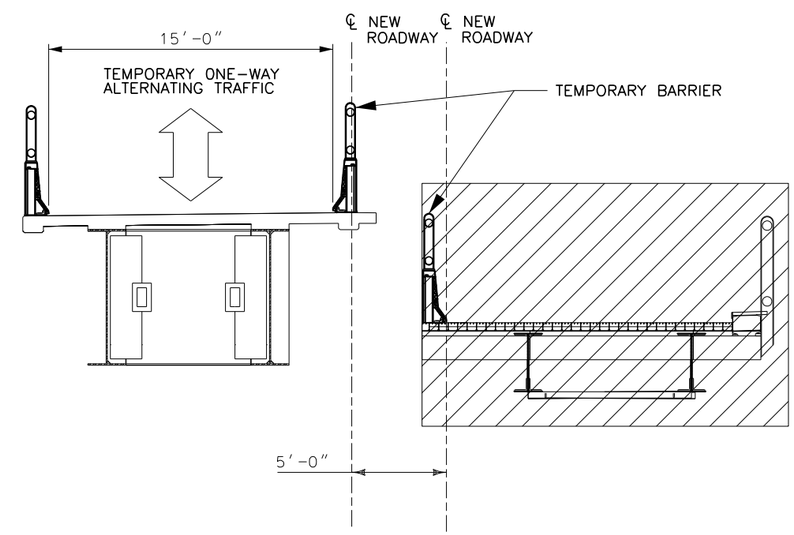

STAGE 3 – TYPICAL BASCULE SPAN SECTION

SCALE: ¼"=1'-0"

CONCEPTUAL PLANS

PROJECT NAME: NORTH HERO GRAND ISLE BRIDGE	
PROJECT NUMBER: BHF 028-1(26)	
FILE NAME: z12b142bdr_xscs3.dgn	PLOT DATE: 7/28/2015
PROJECT LEADER: C. SWANSON	DRAWN BY: P. MONTICCIOLO
DESIGNED BY: H. PROTIN	CHECKED BY: G. NICKELS
CONSTRUCTION STAGE 3 - SECTIONS	SHEET 22 OF 30

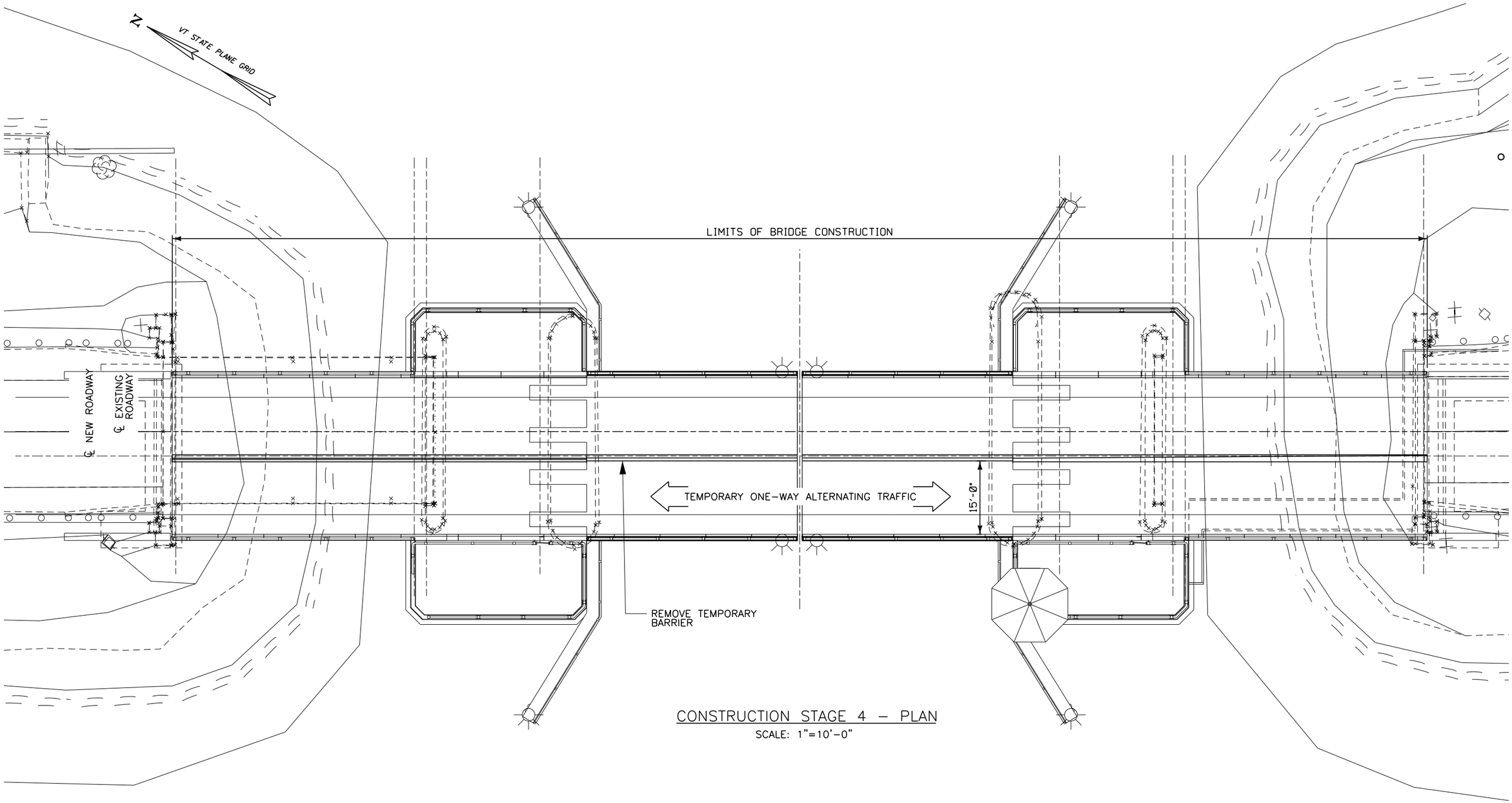

CONSTRUCTION STAGE 4 – PLAN

SCALE: 1"=10'-0"

CONCEPTUAL PLANS

HDR

PROJECT NAME: NORTH HERO GRAND ISLE BRIDGE	
PROJECT NUMBER: BHF 028-1(26)	
FILE NAME: z12b142bdr_cs4.dgn	PLOT DATE: 7/28/2015
PROJECT LEADER: C. SWANSON	DRAWN BY: P. MONTICCIOLO
DESIGNED BY: H. PROTIN	CHECKED BY: G. NICKELS
CONSTRUCTION STAGE 4 - PLAN	SHEET 23 OF 30

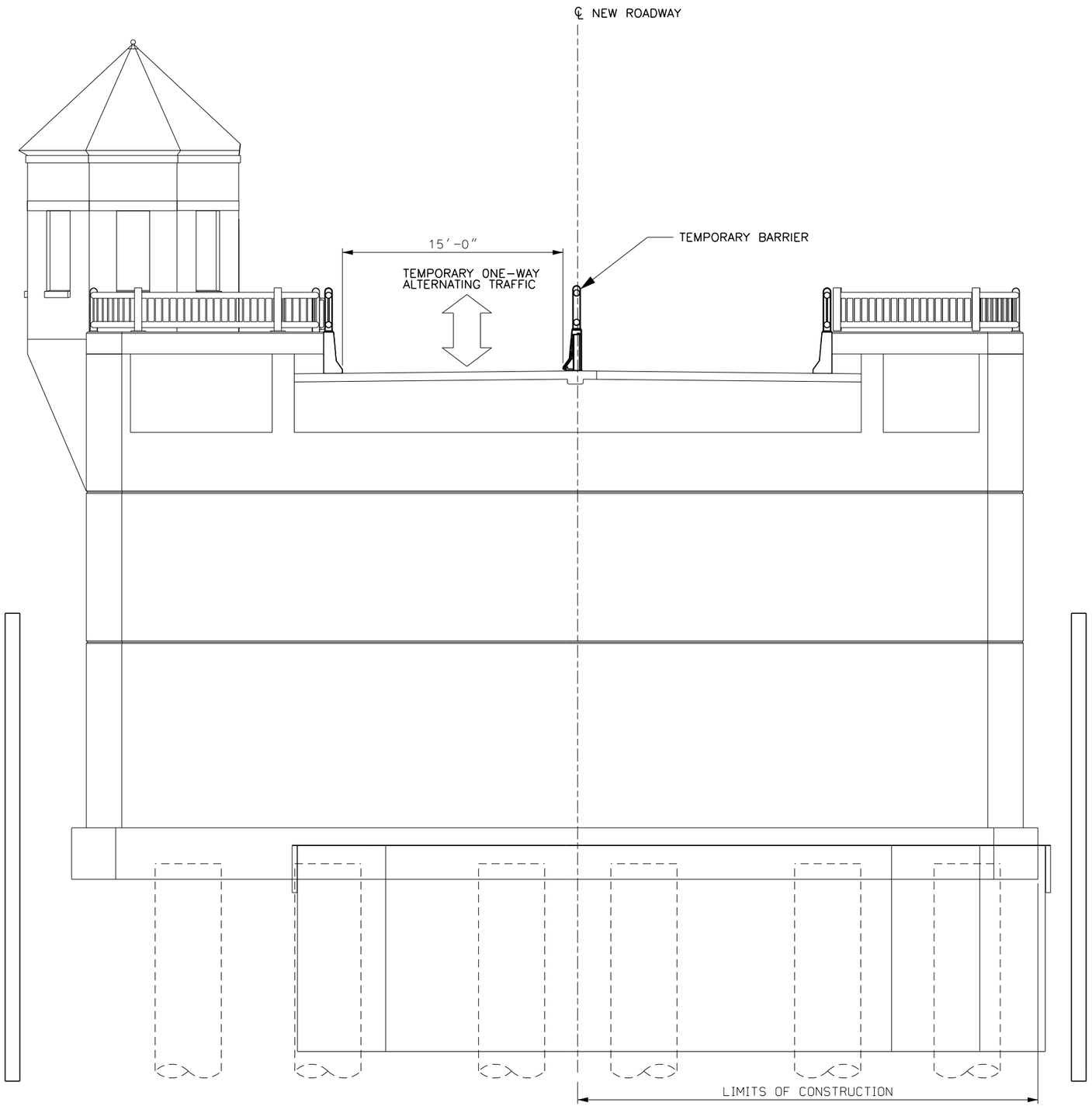

STAGE 4 – TYPICAL CONTERWEIGHT SPAN SECTION

SCALE: ¼"=1'-0"

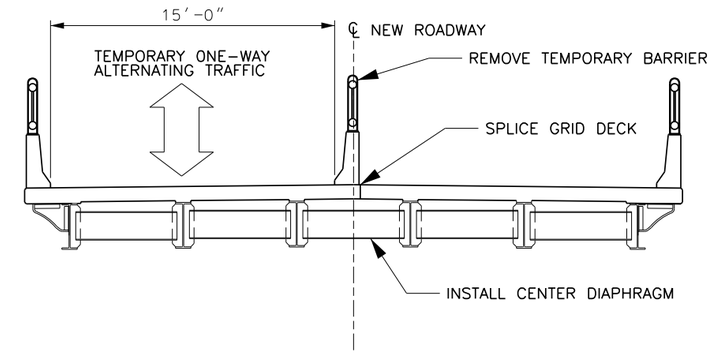

STAGE 4 – TYPICAL APPROACH SPAN SECTION

SCALE: ¼"=1'-0"

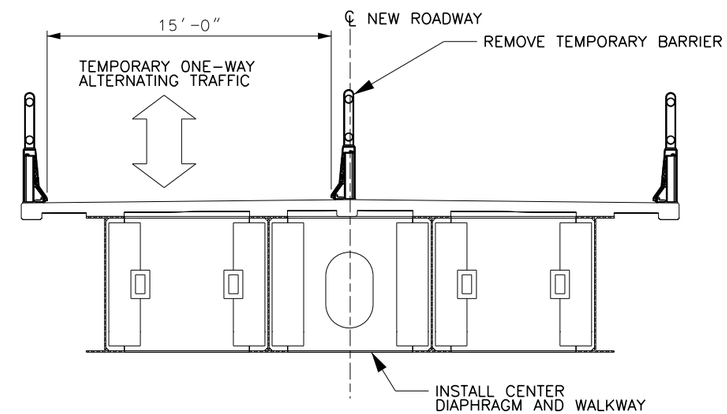

STAGE 4 – TYPICAL BASCULE SPAN SECTION

SCALE: ¼"=1'-0"

CONCEPTUAL PLANS

PROJECT NAME: NORTH HERO GRAND ISLE BRIDGE	
PROJECT NUMBER: BHF 028-1(26)	
FILE NAME: z12b142bdr_xscs4.dgn	PLOT DATE: 7/28/2015
PROJECT LEADER: C. SWANSON	DRAWN BY: P. MONTICCIOLO
DESIGNED BY: H. PROTIN	CHECKED BY: G. NICKELS
CONSTRUCTION STAGE 4 - SECTIONS	SHEET 24 OF 30

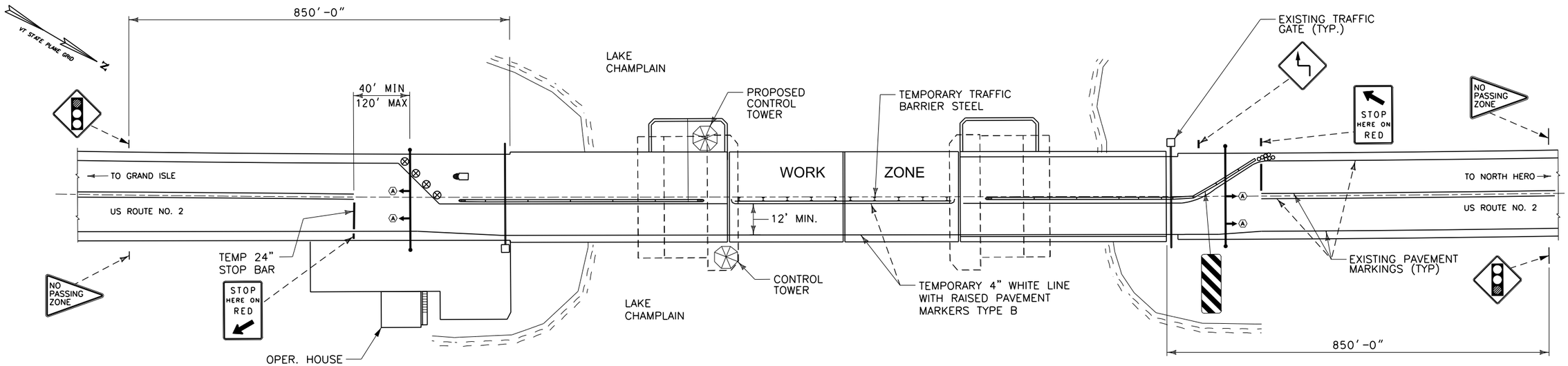

TEMPORARY TRAFFIC CONTROL – STAGE 1

SCALE: 1"=20'-0"

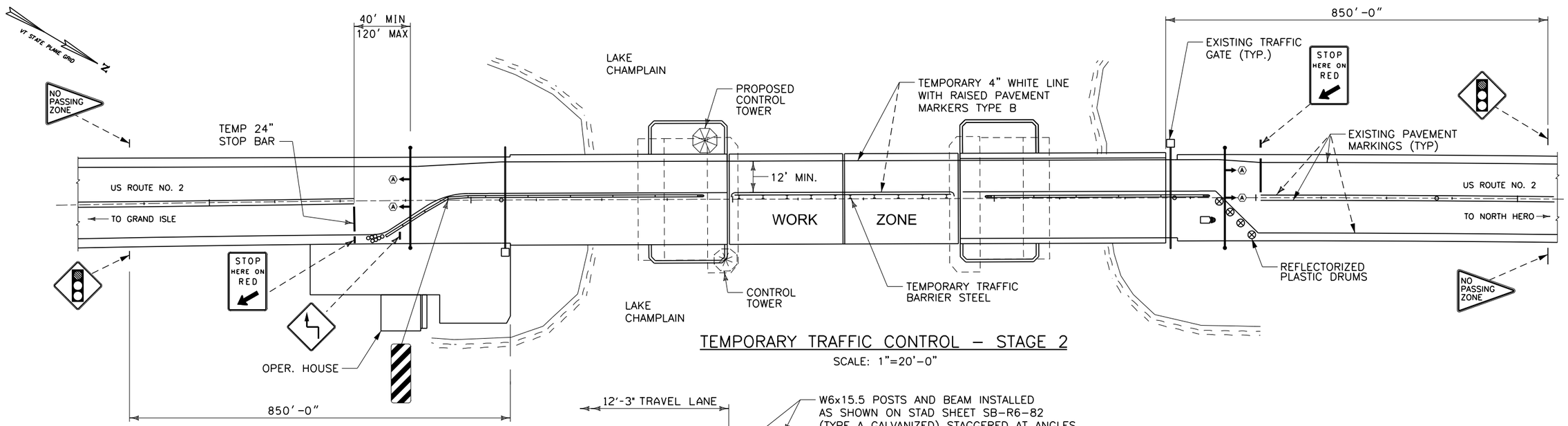

TEMPORARY TRAFFIC CONTROL – STAGE 2

SCALE: 1"=20'-0"

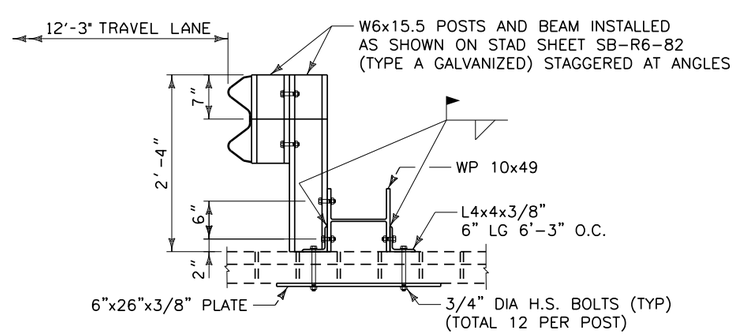

TEMPORARY TRAFFIC BARRIER STEEL

N.T.S.

CONCEPTUAL DESIGN

SCALE 1" = 20'-0"
20 0 20

PROJECT NAME: NORTH HERO GRAND ISLE BRIDGE	
PROJECT NUMBER: BHF 028-1(26)	
FILE NAME: Z12b142bdr_ pl4.dgn	PLOT DATE: 10/27/2014
PROJECT LEADER: C. SWANSON	DRAWN BY: D. DOUGHERTY
DESIGNED BY: C. SWANSON	CHECKED BY: C. SWANSON
MAINTENANCE AND PROTECTION OF TRAFFIC	SHEET 24 OF 30

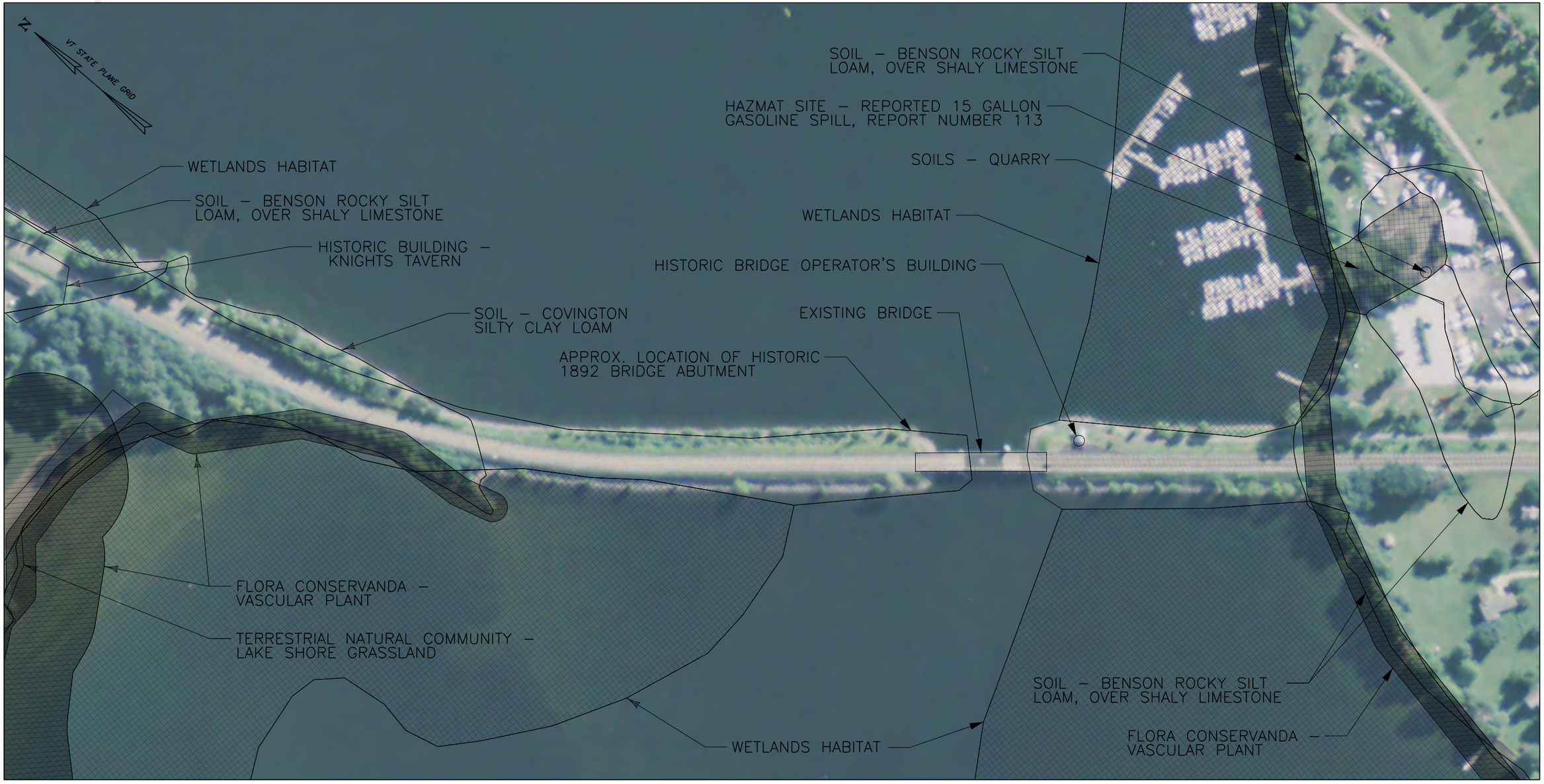

CONCEPTUAL PLANS

SCALE 1" = 100'-0"
100 0 100

HDR

PROJECT NAME: NORTH HERO GRAND ISLE BRIDGE	
PROJECT NUMBER: BHF 028-1(26)	
FILE NAME: Z12b142bdr_RSP.dgn	PLOT DATE: 10/27/2014
PROJECT LEADER: C. SWANSON	DRAWN BY: K. KRETSCH
DESIGNED BY: C. SWANSON	CHECKED BY: C. SWANSON
RESOURSE SITE PLAN	SHEET X OF 14

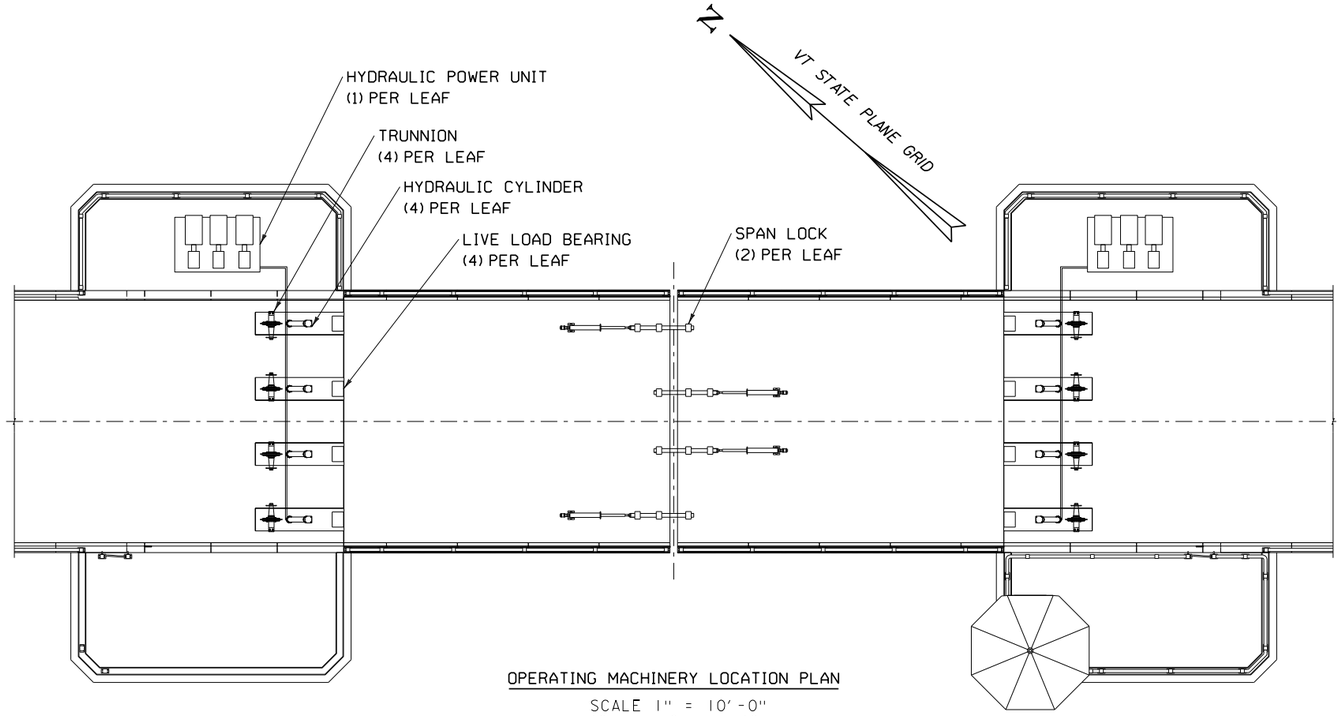

OPERATING MACHINERY LOCATION PLAN

SCALE 1" = 10'-0"

10 0 10

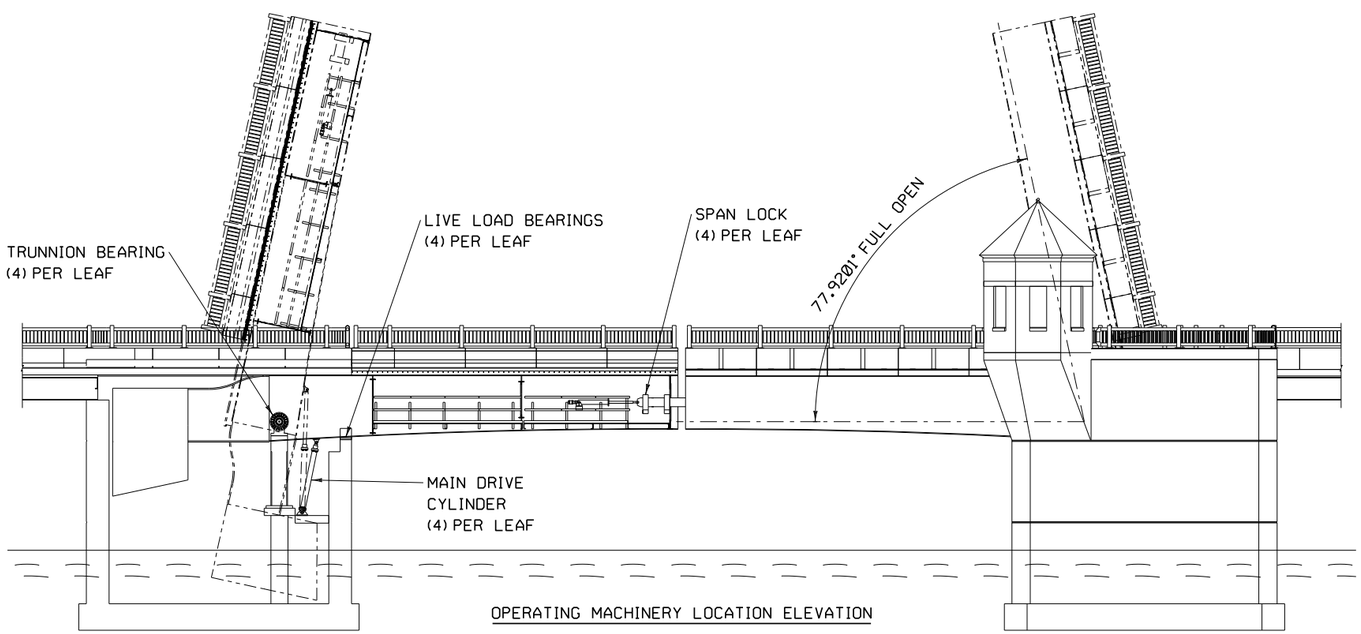

OPERATING MACHINERY LOCATION ELEVATION

SCALE 1" = 10'-0"

10 0 10

SPAN DRIVE MACHINERY

MAIN SPAN DRIVE MACHINERY WILL CONSIST OF (4) HYDRAULIC CYLINDERS PER LEAF LOCATED UNDER EACH BASCULE GIRDER. THE CYLINDERS WILL BE DESIGNED WITH ENOUGH CAPACITY SUCH THAT THE SPAN CAN BE OPERATED IN THE EVENT THAT ONE CYLINDER FAILS. CYLINDERS WILL BE DRIVEN USING A HPU LOCATED WITHIN EACH PIER. HPUS WILL BE SIZED WITH MULTIPLE PUMPS FOR REDUNDANCY. HYDRAULIC CYLINDERS WILL BE MOUNTED USING SPHERICAL BEARINGS.

SPAN SUPPORT MACHINERY

EACH LEAF WILL ROTATE ABOUT TRUNNION BEARINGS AT EACH BASCULE GIRDER (4 TOTAL PER LEAF). TRUNNIONS WILL BE INSTALLED USING SPHERICAL ROLLER BEARINGS.

IN THE SEATED POSITION THE SPAN WILL BE LOCKED USING FOUR ACTUATED BARS; ONE LOCATED AT EACH BASCULE GIRDER. THE BARS WILL BE ACTUATED USING ELECTRICALLY DRIVEN SCREW TYPE ACTUATORS.

LIVE LOAD BEARINGS WILL BE INSTALLED UNDER EACH GIRDER.

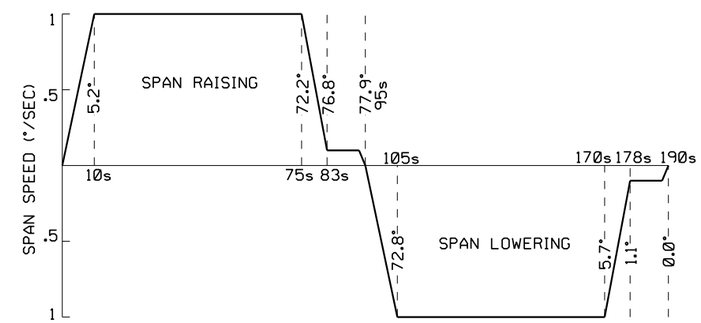

PROPOSED SPAN OPERATING CURVE

DESIGN CONCEPT

DOUBLE LEAF BASCULE ON-LINE ALTERNATIVE	**PROJECT NAME:** NORTH HERO GRAND ISLE BRIDGE **PROJECT NUMBER:** BHF 028-1(26)	
	FILE NAME: Z12b142bdr_ pl1.dgn **PROJECT LEADER:** C. SWANSON **DESIGNED BY:** C. SWANSON **PROPOSED OPERATING MACHINERY**	**PLOT DATE:** 10/27/2014 **DRAWN BY:** C. MADDEN **CHECKED BY:** C. SWANSON **SHEET** 26 **OF** 28

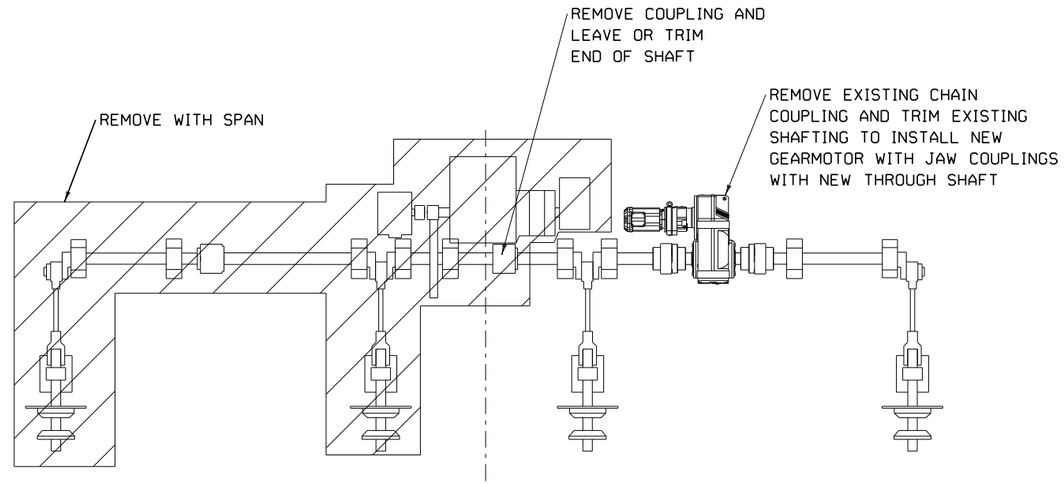

SPAN LOCK MACHINERY
TEMPORARY DRIVE
NOT TO SCALE

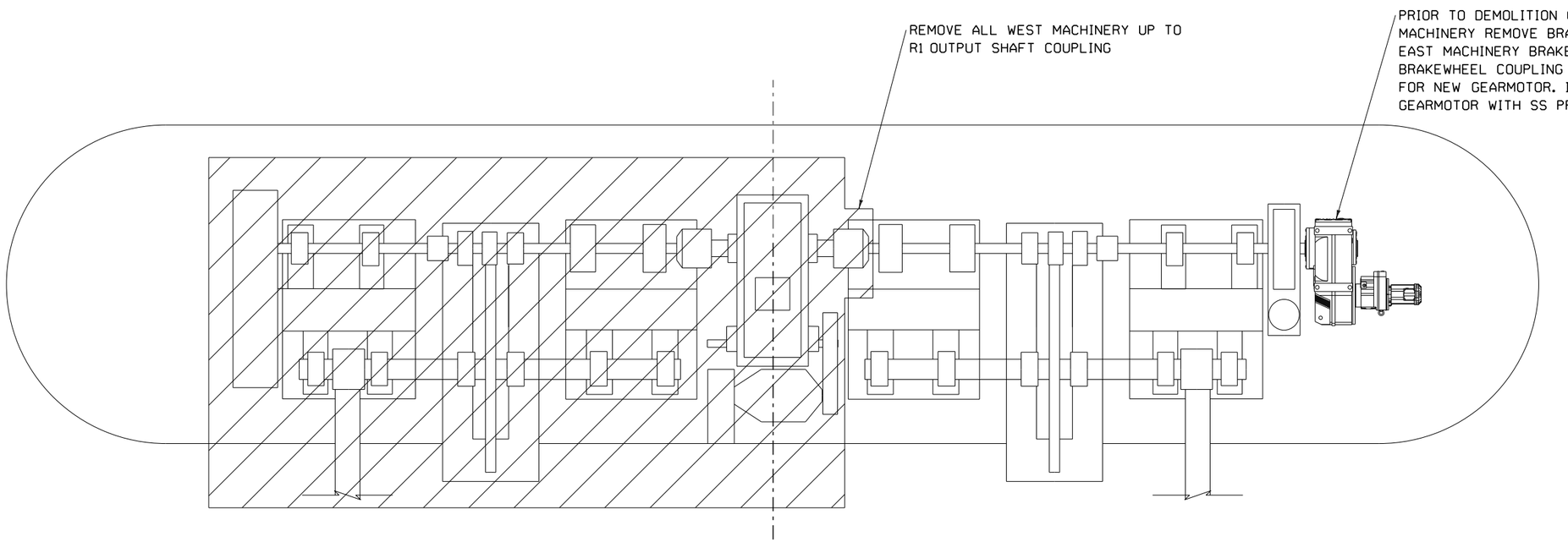

SPAN DRIVE MACHINERY
TEMPORARY DRIVE
NOT TO SCALE

DESIGN CONCEPT

DOUBLE LEAF BASCULE ON-LINE ALTERNATIVE	**PROJECT NAME:** NORTH HERO GRAND ISLE BRIDGE **PROJECT NUMBER:** BHF 028-1(26)	
	FILE NAME: Z12b142bdr_ pl1.dgn **PROJECT LEADER:** C. SWANSON **DESIGNED BY:** C. SWANSON **TEMPORARY MACHINERY**	**PLOT DATE:** 10/27/2014 **DRAWN BY:** C. MADDEN **CHECKED BY:** C. SWANSON **SHEET** 27 **OF** 30

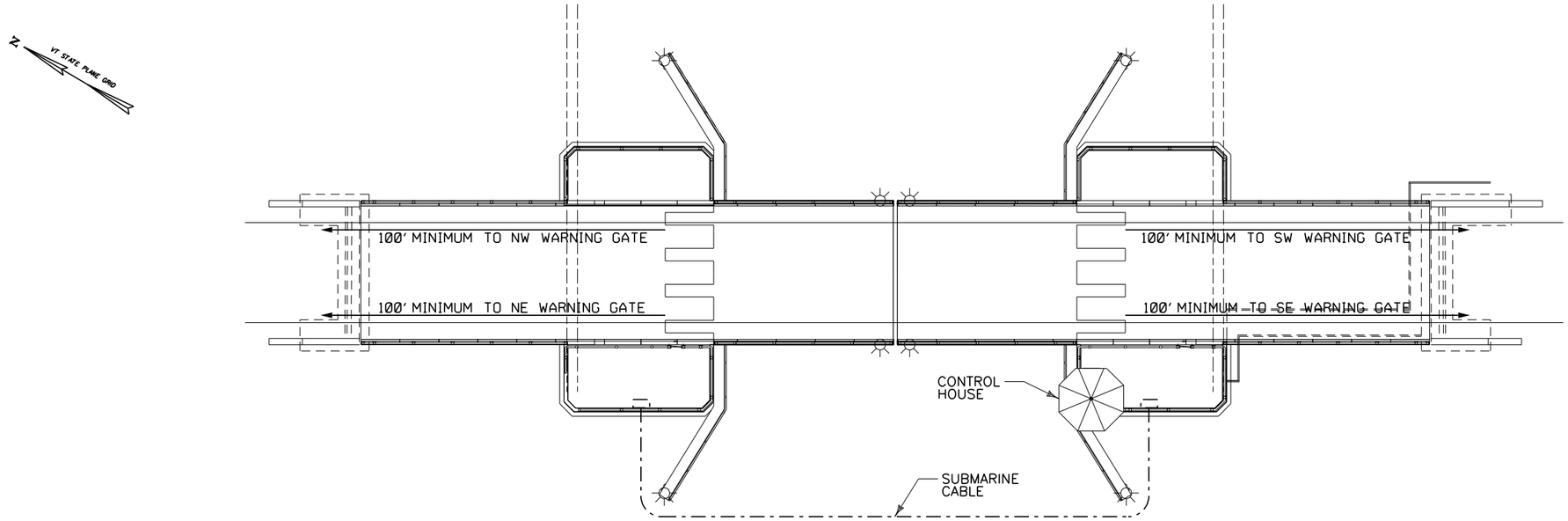

PLAN
SCALE: 1/16"=1'-0"

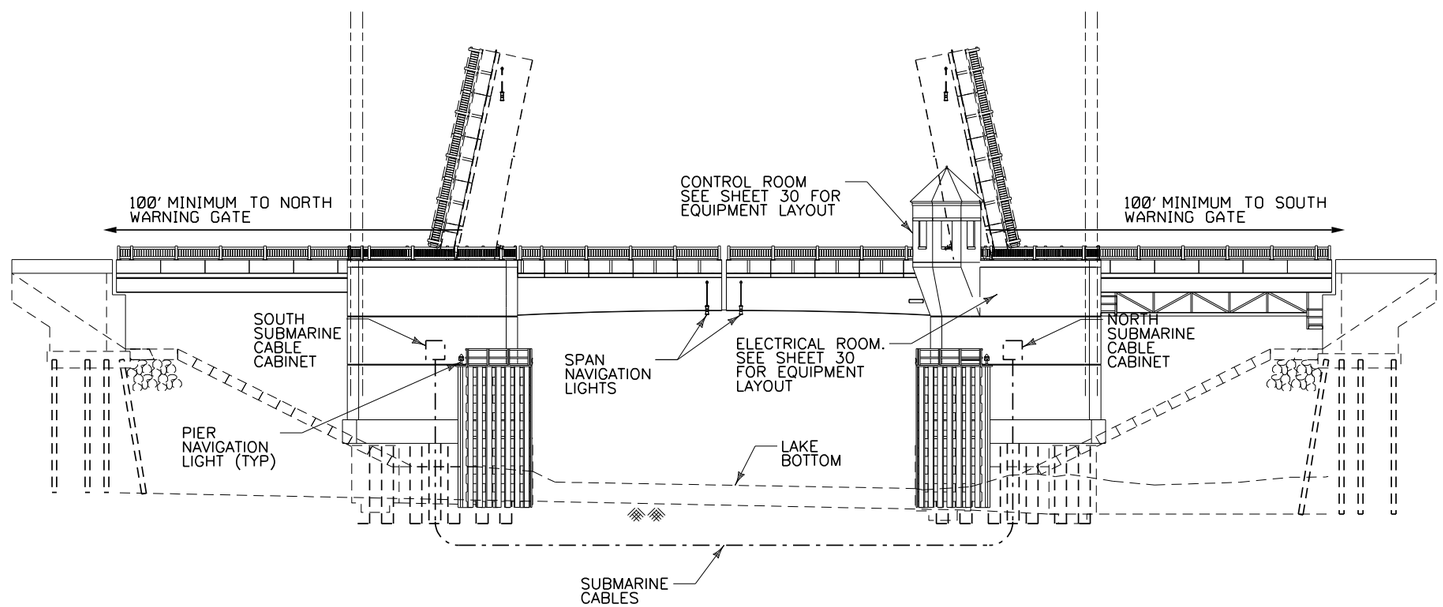

ELEVATION
SCALE: 1/16"=1'-0"

DESIGN CONCEPT

PROJECT NAME: NORTH HERO GRAND ISLE BRIDGE	
PROJECT NUMBER: BHF 028-1(26)	
FILE NAME: Z12b142bdr_elecgpe.dgn	PLOT DATE: 7/24/2015
PROJECT LEADER: C. SWANSON	DRAWN BY: Y. ADELEKAN
DESIGNED BY: Y. ADELEKAN	CHECKED BY: H. PROTIN
ELECTRICAL PLAN AND ELEVATION	SHEET 29 OF 30

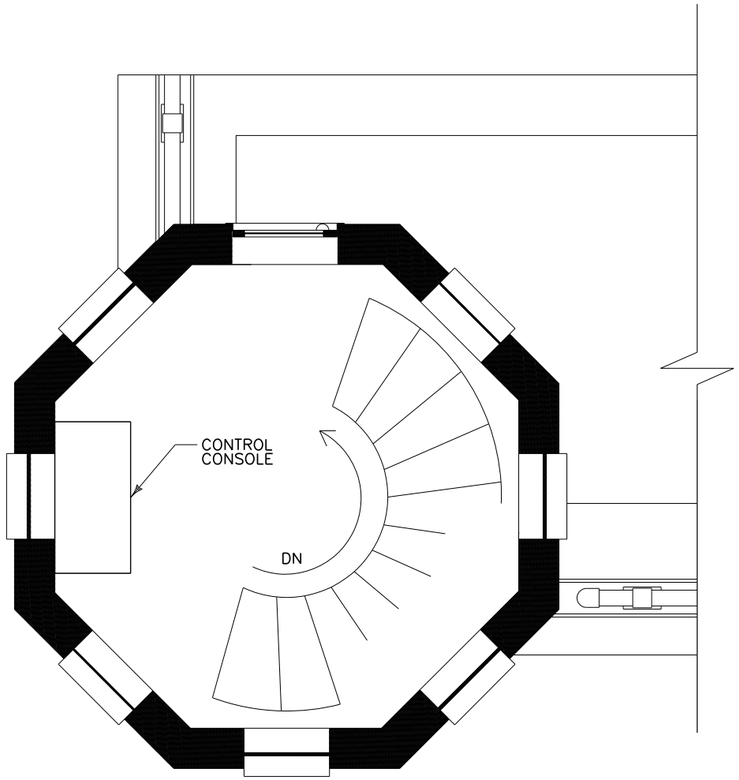

CONTROL ROOM ROADWAY LEVEL
SCALE: ½"=1'-0"

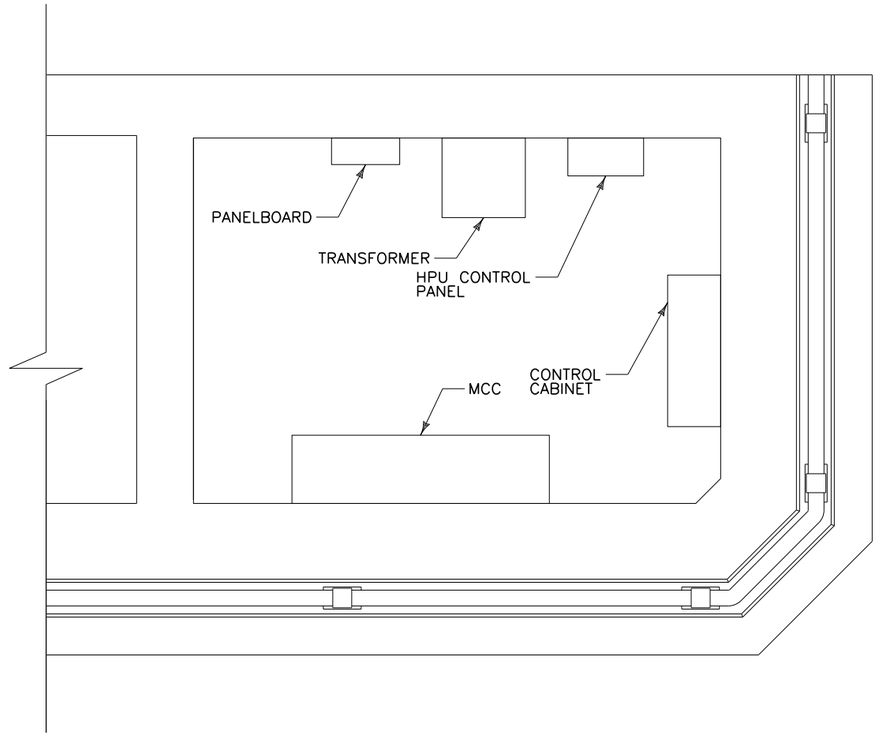

ELECTRICAL ROOM LOWER LEVEL
SCALE: ½"=1'-0"

DESIGN CONCEPT

HDR

PROJECT NAME: NORTH HERO GRAND ISLE BRIDGE
PROJECT NUMBER: BHF 028-1(26)

FILE NAME: Z12b142bdr_ctrlhouse.dgn
PROJECT LEADER: C. SWANSON
DESIGNED BY: Y. ADELEKAN
ELECTRICAL EQUIPMENT LAYOUT

PLOT DATE: 7/24/2015
DRAWN BY: Y. ADELEKAN
CHECKED BY: H. PROTIN
SHEET 30 OF 30