SEE SHEET 7 FOR INDEX OF SHEETS AND LIST OF STANDARDS

STATE OF VERMONT
AGENCY OF TRANSPORTATION

PROPOSED IMPROVEMENT
BRIDGE PROJECT

TOWN OF FAIRFIELD
COUNTY OF FRANKLIN

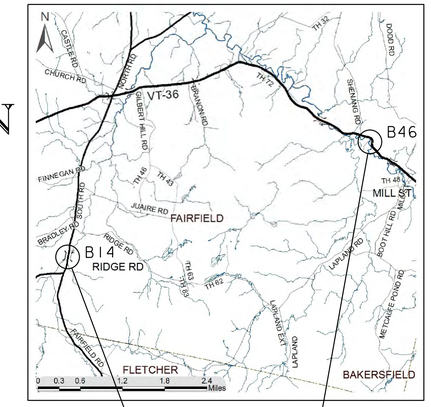

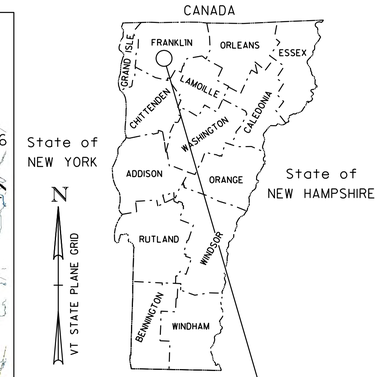

FAIRFIELD
BRF 0281 (25)

FAIRFIELD
BRO 1448 (41)

FAIRFIELD

FAIRFIELD
BRF 0281 (25)

ROUTE NO.: SOUTH ROAD, FAS 0281 (RURAL MAJOR COLLECTOR), CLASS 2 TOWN HIGHWAY

BRIDGE NO.: 14

PROJECT LOCATION: ON TH 1 (FAS 0281), APPROXIMATELY 2.5 MILES SOUTH OF ITS JUNCTION WITH VT 36.

PROJECT DESCRIPTION: REPLACEMENT OF EXISTING BRIDGE (BRIDGE NO. 14) WITH RELATED ROADWAY APPROACH AND CHANNEL WORK.

LENGTH OF STRUCTURE: 44.00 FEET
LENGTH OF ROADWAY: 131.00 FEET
LENGTH OF PROJECT: 175.00 FEET

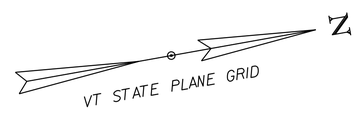

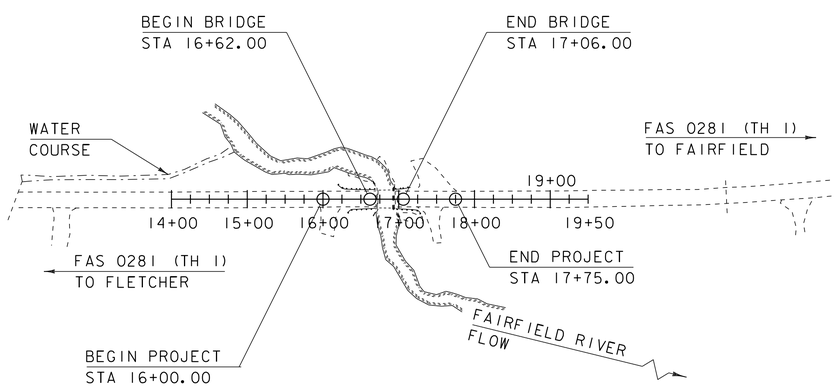

FAIRFIELD
BRO 1448 (41)

ROUTE NO.: ELM BROOK ROAD, TOWN HIGHWAY 47 (CLASS 3)

BRIDGE NO.: 46

PROJECT LOCATION: 0.05 MILES WESTERLY OF THE JUNCTION OF TOWN HIGHWAY 47 AND VT ROUTE 36.

PROJECT DESCRIPTION: REPLACEMENT OF EXISTING BRIDGE (BRIDGE NO. 46) WITH RELATED ROADWAY APPROACH AND CHANNEL WORK.

LENGTH OF STRUCTURE: 54.00 FEET
LENGTH OF ROADWAY: 21.00 FEET
LENGTH OF PROJECT: 75.00 FEET

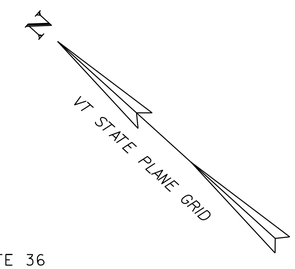

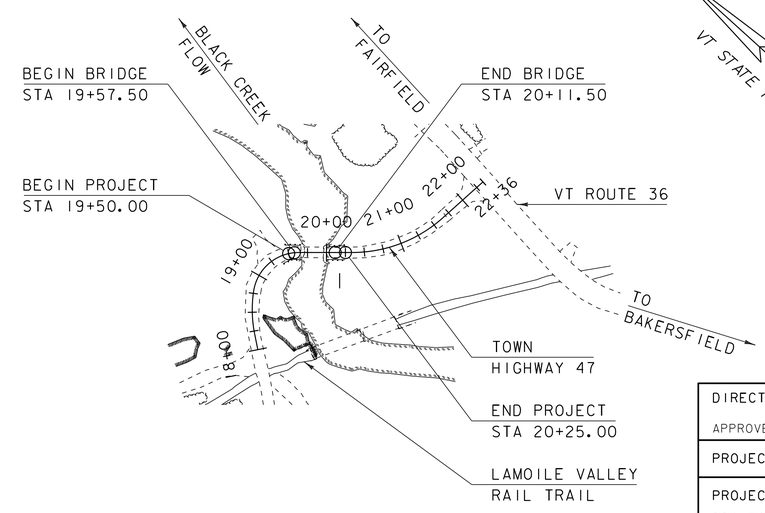

SCALE 1" = 100'-0"
50 0 50

CONSTRUCTION IS TO BE CARRIED ON IN ACCORDANCE WITH THESE PLANS AND THE STANDARD SPECIFICATIONS FOR CONSTRUCTION DATED 2011, AS APPROVED BY THE FEDERAL HIGHWAY ADMINISTRATION ON JULY 20, 2011 FOR USE ON THIS PROJECT, INCLUDING ALL SUBSEQUENT REVISIONS AND SUCH REVISED SPECIFICATIONS AND SPECIAL PROVISIONS AS ARE INCORPORATED IN THESE PLANS.

QUALITY ASSURANCE PROGRAM : LEVEL 2

SURVEYED BY : L. ORVIS
SURVEYED DATE : 3/25/12 & 3/11/12

DATUM
VERTICAL NAVD88
HORIZONTAL NAD (83) 2007

DIRECTOR OF PROJECT DELIVERY
APPROVED _____ DATE _____

PROJECT MANAGER : R. YOUNG, P.E.

PROJECT NAME : FAIRFIELD
PROJECT NUMBER : BRF 0281 (25) & BRO 1448 (41)

GENERAL INFORMATION

SYMBOLOGY LEGEND NOTE

THE SYMBOLOGY ON THIS SHEET IS INTENDED TO COVER STANDARD CONVENTIONAL SYMBOLOGY. THE SYMBOLOGY IS USED FOR EXISTING & PROPOSED FEATURES WITH HEAVIER LINEWEIGHT, IN COMBINATION WITH PROJECT ANNOTATION, AS NOTED ON PROJECT PLAN SHEETS. THIS LEGEND SHEET COVERS THE BASICS. SYMBOLOGY ON PLANS MAY VARY, PLAN ANNOTATIONS AND NOTES SHOULD BE USED TO CLARIFY AS NEEDED.

R.O.W. ABBREVIATIONS (CODES) & SYMBOLS

POINT	CODE	DESCRIPTION
	CH	CHANNEL EASEMENT
	CONST	CONSTRUCTION EASEMENT
	CUL	CULVERT EASEMENT
	D&C	DISCONNECT & CONNECT
	DIT	DITCH EASEMENT
	DR	DRAINAGE EASEMENT
	DRIVE	DRIVEWAY EASEMENT
	EC	EROSION CONTROL
	HWY	HIGHWAY EASEMENT
	I&M	INSTALL & MAINTAIN EASEMENT
	LAND	LANDSCAPE EASEMENT
	R&RES	REMOVE & RESET
	R&REP	REMOVE & REPLACE
	SR	SLOPE RIGHT
	UE	UTILITY EASEMENT
	(P)	PERMANENT EASEMENT
	(T)	TEMPORARY EASEMENT
■	BNDNS	BOUND SET
⧈	BNDNS	BOUND TO BE SET
●	IPNS	IRON PIN SET
◎	IPNS	IRON PIN TO BE SET
⊠	CALC	EXISTING ROW POINT
○	PROW	PROPOSED ROW POINT
[LENGTH]		LENGTH CARRIED ON NEXT SHEET

COMMON TOPOGRAPHIC POINT SYMBOLS

POINT	CODE	DESCRIPTION
	APL	BOUND APPARENT LOCATION
	BM	BENCHMARK
	BND	BOUND
	CB	CATCH BASIN
	COMB	COMBINATION POLE
	DITHR	DROP INLET THROATED DNC
	EL	ELECTRIC POWER POLE
	FPOLE	FLAGPOLE
	GASFIL	GAS FILLER
	GP	GUIDE POST
	GSO	GAS SHUT OFF
	GUY	GUY POLE
	GUYW	GUY WIRE
	GV	GATE VALUE
	H	TREE HARDWOOD
	HCTRL	CONTROL HORIZONTAL
	HVCTRL	CONTROL HORIZ. & VERTICAL
	HYD	HYDRANT
	IP	IRON PIN
	IPIPE	IRON PIPE
	LI	LIGHT - STREET OR YARD
	MB	MAILBOX
	MH	MANHOLE (MH)
	MM	MILE MARKER
	PM	PARKING METER
	PMK	PROJECT MARKER
	POST	POST STONE/WOOD
	RRSIG	RAILROAD SIGNAL
	RRSL	RAILROAD SWITCH LEVER
	S	TREE SOFTWOOD
	SAT	SATELLITE DISH
	SHRUB	SHRUB
	SIGN	SIGN
	STUMP	STUMP
	TEL	TELEPHONE POLE
	TIE	TIE
	TSIGN	SIGN W/DOUBLE POST
	VCTRL	CONTROL VERTICAL
	WELL	WELL
	WSO	WATER SHUT OFF

THESE ARE COMMON VAOT SURVEY POINT SYMBOLS FOR EXISTING FEATURES, ALSO USED FOR PROPOSED FEATURES WITH HEAVIER LINEWEIGHT, IN COMBINATION WITH PROPOSED ANNOTATION.

PROPOSED GEOMETRY CODES

CODE	DESCRIPTION
PC	POINT OF CURVATURE
PI	POINT OF INTERSECTION
CC	CENTER OF CURVE
PT	POINT OF TANGENCY
PCC	POINT OF COMPOUND CURVE
PRC	POINT OF REVERSE CURVE
POB	POINT OF BEGINNING
POE	POINT OF ENDING
STA	STATION PREFIX
AH	AHEAD STATION SUFFIX
BK	BACK STATION SUFFIX
D	CURVE DEGREE OF (100FT)
R	CURVE RADUIS OF
T	CURVE TANGENT LENGTH
L	CURVE LENGTH OF
E	CURVE EXTERNAL DISTANCE

UTILITY SYMBOLOGY

UNDERGROUND UTILITIES

UGU	UTILITY (GENERIC-UNKNOWN)
UT	TELEPHONE
UE	ELECTRIC
UC	CABLE (TV)
UEC	ELECTRIC+CABLE
UET	ELECTRIC+TELEPHONE
UCT	CABLE+TELEPHONE
UECT	ELECTRIC+CABLE+TELEP.
G	GAS LINE
W	WATER LINE
S	SANITARY SEWER (SEPTIC)

ABOVE GROUND UTILITIES (AERIAL)

AGU	UTILITY (GENERIC-UNKNOWN)
T	TELEPHONE
E	ELECTRIC
C	CABLE (TV)
EC	ELECTRIC+CABLE
ET	ELECTRIC+TELEPHONE
AER E&T	ELECTRIC+TELEPHONE
CT	CABLE+TELEPHONE
ECT	ELECTRIC+CABLE+TELEP.
	UTILITY POLE GUY WIRE

PROJECT CONSTRUCTION SYMBOLOGY

PROJECT DESIGN & LAYOUT SYMBOLOGY

CZ	CLEAR ZONE
	PLAN LAYOUT MATCHLINE

PROJECT CONSTRUCTION FEATURES

	TOP OF CUT SLOPE
	TOE OF FILL SLOPE
	STONE FILL
	BOTTOM OF DITCH ℄
	CULVERT PROPOSED
	STRUCTURE SUBSURFACE
PDF PDF	PROJECT DEMARCATION FENCE
BF BF	BARRIER FENCE
	TREE PROTECTION ZONE (TPZ)
	STRIPING LINE REMOVAL
	SHEET PILES

CONVENTIONAL BOUNDARY SYMBOLOGY

BOUNDARY LINES

TOWN LINE	TOWN BOUNDARY LINE
COUNTY LINE	COUNTY BOUNDARY LINE
STATE LINE	STATE BOUNDARY LINE
	PROPOSED STATE R.O.W. (LIMITED ACCESS)
	PROPOSED STATE R.O.W.
	STATE ROW (LIMITED ACCESS)
	STATE ROW
	TOWN ROW
	PERMANENT EASEMENT LINE (P)
	TEMPORARY EASEMENT LINE (T)
	SURVEY LINE
P/L P/L	PROPERTY LINE (P/L)
SR SR SR	SLOPE RIGHTS
6f 6f	6F PROPERTY BOUNDARY
4f 4f	4F PROPERTY BOUNDARY
HAZ HAZ	HAZARDOUS WASTE

EPSC LAYOUT PLAN SYMBOLOGY

EPSC MEASURES

	FILTER CURTAIN
	SILT FENCE
	SILT FENCE WOVEN WIRE
	CHECK DAM
	DISTURBED AREAS REQUIRING RE-VEGETATION
	EROSION MATTING

ENVIRONMENTAL RESOURCES

	WETLAND BOUNDARY
	RIPARIAN BUFFER ZONE
	WETLAND BUFFER ZONE
	SOIL TYPE BOUNDARY
T&E	THREATENED & ENDANGERED SPECIES
HAZ HAZ	HAZARDOUS WASTE AREA
AG	AGRICULTURAL LAND
HABITAT	FISH & WILDLIFE HABITAT
FLOOD PLAIN	FLOOD PLAIN
OHW	ORDINARY HIGH WATER (OHW)
	STORM WATER
	USDA FOREST SERVICE LANDS
	WILDLIFE HABITAT SUIT/CONN

ARCHEOLOGICAL & HISTORIC

ARCH	ARCHEOLOGICAL BOUNDARY
HISTORIC DIST	HISTORIC DISTRICT BOUNDARY
HISTORIC	HISTORIC AREA
H	HISTORIC STRUCTURE

CONVENTIONAL TOPOGRAPHIC SYMBOLOGY

EXISTING FEATURES

	ROAD EDGE PAVEMENT
	ROAD EDGE GRAVEL
	DRIVEWAY EDGE
	DITCH
	FOUNDATION
	FENCE (EXISTING)
	FENCE WOOD POST
	FENCE STEEL POST
	GARDEN
	ROAD GUARDRAIL
	RAILROAD TRACKS
	CULVERT (EXISTING)
	STONE WALL
	WALL
	WOOD LINE
	BRUSH LINE
	HEDGE
	BODY OF WATER EDGE
	LEDGE EXPOSED

PROJECT NAME: FAIRFIELD
PROJECT NUMBER: BRF 0281(25) & BRO 1448(41)

FILE NAME: s12j156excel.dgn
PROJECT LEADER: R. YOUNG
DESIGNED BY: R. KLINEFELTER
COMPOSITE LEGEND SHEET

PLOT DATE: 18-AUG-2014
DRAWN BY: M. LONGSTREET
CHECKED BY: J. SALVATORI
SHEET 2 OF 69

COMPOSITE QUANTITY SHEET 1

FAIRFIELD BRF 0281(25)				FAIRFIELD BRO 1448(41)				TOTALS		DESCRIPTIONS			
ROADWAY	EROSION CONTROL	BRIDGE	FULL C.E. ITEMS	ROADWAY	EROSION CONTROL	BRIDGE	FULL C.E. ITEMS	GRAND TOTAL	FINAL	UNIT	ITEMS	ITEM NUMBER	ROUND
1								1		LS	CLEARING AND GRUBBING, INCLUDING INDIVIDUAL TREES AND STUMPS (BRF 0281(25))	201.10	
				1				1		LS	CLEARING AND GRUBBING, INCLUDING INDIVIDUAL TREES AND STUMPS (BRO 1448(41))	201.10	
400				250				650		CY	COMMON EXCAVATION	203.15	
						5		5		CY	SOLID ROCK EXCAVATION	203.16	
		270				340		610		CY	UNCLASSIFIED CHANNEL EXCAVATION	203.27	
1				1				2		CY	TRENCH EXCAVATION OF EARTH, EXPLORATORY (N.A.B.I.)	204.22	
		50				100		150		CY	STRUCTURE EXCAVATION	204.25	
		10				60		70		CY	GRANULAR BACKFILL FOR STRUCTURES	204.30	
240								240		SY	COLD PLANING, BITUMINOUS PAVEMENT	210.10	
450				180				630		CY	SUBBASE OF CRUSHED GRAVEL, COARSE GRADED	301.25	
10				90				100		CY	AGGREGATE SURFACE COURSE	401.10	
15								15		CY	AGGREGATE SHOULDERS, IN PLACE	402.10	
6								6		CWT	EMULSIFIED ASPHALT	404.65	
1								1		LU	PRICE ADJUSTMENT, ASPHALT CEMENT (N.A.B.I.)	406.50	
		1						1		LS	FURNISHING EQUIPMENT FOR DRIVING PILING (BRF 0281(25))	504.10	
						1		1		LS	FURNISHING EQUIPMENT FOR DRIVING PILING (BRO 1448(41))	504.10	
		300				100		400		LF	STEEL PILING, HP 12 X 84	505.165	
		2						2		EACH	DYNAMIC PILE LOADING TEST	505.45	
		2400				1800		4200		LB	STRUCTURAL STEEL (FPQ)	506.60	
		220				162		382		LF	GROUTING SHEAR KEYS	510.24	
		48						48		LF	BRIDGE EXPANSION JOINT, ASPHALTIC PLUG	516.10	
		125						125		SY	MEMBRANE WATERPROOFING, SPRAY APPLIED	520.10	
48								48		LF	JOINT SEALER, HOT POURED	524.11	
		100				112.5		212.5		LF	BRIDGE RAILING, GALVANIZED HDSB / FASCIA MOUNTED / STEEL TUBING	525.44	
		1						1		EACH	REMOVAL OF STRUCTURE (605 SF - EST.)	529.15	
						1		1		EACH	REMOVAL OF STRUCTURE (705 SF - EST.)	529.15	
		12				16		28		EACH	BEARING DEVICE ASSEMBLY, PLAIN ELASTOMERIC PAD	531.16	
											BEGIN OPTION AA		
		1						1		LS	PRECAST CONCRETE STRUCTURE (ABUTMENT #1)(BRF 0281(25))	540.10	
		1						1		LS	SPECIAL PROVISION (CONTRACTOR-FABRICATED PRECAST CONCRETE STRUCTURE)(ABUTMENT #1)(BRF 0281(25))	900.645	
											END OPTION AA		
											BEGIN OPTION BB		
						1		1		LS	PRECAST CONCRETE STRUCTURE (ABUTMENT #1)(BRO 1448(41))	540.10	
						1		1		LS	SPECIAL PROVISION (CONTRACTOR-FABRICATED PRECAST CONCRETE STRUCTURE)(ABUTMENT #1)(BRO 1448(41))	900.645	
											END OPTION BB		

DETAILED SUMMARY OF QUANTITIES		
QUANTITIES	UNIT	ITEMS

PROJECT NAME: FAIRFIELD
PROJECT NUMBER: BRF 0281(25) & BRO 1448(41)

FILE NAME: s12j156qs_composite.dgn
PROJECT LEADER: R. YOUNG
DESIGNED BY: R. KLINEFELTER
COMPOSITE QUANTITY SHEET 1

PLOT DATE: 11-SEP-2014
DRAWN BY: K. FRIEDLAND
CHECKED BY: J. SALVATORI
SHEET 3 OF 69

COMPOSITE QUANTITY SHEET 2

FAIRFIELD BRF 0281(25)				FAIRFIELD BRO 1448(41)				TOTALS		DESCRIPTIONS			
ROADWAY	EROSION CONTROL	BRIDGE	FULL C.E. ITEMS	ROADWAY	EROSION CONTROL	BRIDGE	FULL C.E. ITEMS	GRAND TOTAL	FINAL	UNIT	ITEMS	ITEM NUMBER	ROUND
											BEGIN OPTION CC		
		1						1		LS	PRECAST CONCRETE STRUCTURE (ABUTMENT #2)(BRF 0281(25))	540.10	
		1						1		LS	SPECIAL PROVISION (CONTRACTOR-FABRICATED PRECAST CONCRETE STRUCTURE)(ABUTMENT #2)(BRF 0281(25))	900.645	
											END OPTION CC		
											BEGIN OPTION DD		
						1		1		LS	PRECAST CONCRETE STRUCTURE (ABUTMENT #2)(BRO 1448(41))	540.10	
						1		1		LS	SPECIAL PROVISION (CONTRACTOR-FABRICATED PRECAST CONCRETE STRUCTURE)(ABUTMENT #2)(BRO 1448(41))	900.645	
											END OPTION DD		
											BEGIN OPTION EE		
		1						1		LS	PRECAST CONCRETE STRUCTURE (APPROACH SLAB #1)	540.10	
		1						1		LS	SPECIAL PROVISION (CONTRACTOR-FABRICATED PRECAST CONCRETE STRUCTURE)(APPROACH SLAB #1)	900.645	
											END OPTION EE		
											BEGIN OPTION FF		
		1						1		LS	PRECAST CONCRETE STRUCTURE (APPROACH SLAB #2)	540.10	
		1						1		LS	SPECIAL PROVISION (CONTRACTOR-FABRICATED PRECAST CONCRETE STRUCTURE)(APPROACH SLAB #2)	900.645	
											END OPTION FF		
	1				1			2		TON	DUST AND ICE CONTROL WITH CALCIUM CHLORIDE	609.15	
25								25		CY	STONE FILL, TYPE I	613.10	
		170				230		400		CY	STONE FILL, TYPE III	613.12	
58				58				116		LF	STEEL BEAM GUARDRAIL, GALVANIZED	621.20	
4				4				8		EACH	ANCHOR FOR STEEL BEAM RAIL	621.60	
4				4				8		EACH	GUARDRAIL APPROACH SECTION, GALV HD STEEL BEAM	621.737	
148				93				241		LF	REMOVAL AND DISPOSAL OF GUARDRAIL	621.80	
500								500		HR	FLAGGERS	630.15	
			0.5				0.5	1		LS	FIELD OFFICE, ENGINEERS	631.10	
			0.5				0.5	1		LS	TESTING EQUIPMENT, CONCRETE	631.16	
			1					1		LS	TESTING EQUIPMENT, BITUMINOUS	631.17	
			1500				1500	3000		DL	FIELD OFFICE TELEPHONE (N.A.B.I.)	631.26	
0.5				0.5				1		LS	MOBILIZATION/DEMOBILIZATION	635.11	
650								650		LF	4 INCH YELLOW LINE	646.21	
600				160				760		SY	GEOTEXTILE FOR ROADBED SEPARATOR	649.11	
		190				280		470		SY	GEOTEXTILE UNDER STONE FILL	649.31	
	180				180			360		SY	GEOTEXTILE FOR SILT FENCE, WOVEN WIRE REINFORCED	649.515	
	60				80			140		SY	GEOTEXTILE FOR FILTER CURTAIN	649.61	
	5				5			10		LB	SEED	651.15	
	40				30			70		LB	FERTILIZER	651.18	
	1				1			2		TON	AGRICULTURAL LIMESTONE	651.20	
	1				1			2		TON	HAY MULCH	651.25	

DETAILED SUMMARY OF QUANTITIES		
QUANTITIES	UNIT	ITEMS

PROJECT NAME: FAIRFIELD
PROJECT NUMBER: BRF 0281(25) & BRO 1448(41)

FILE NAME: s12j156qs_composite.dgn
PROJECT LEADER: R. YOUNG
DESIGNED BY: R. KLINEFELTER
COMPOSITE QUANTITY SHEET 2

PLOT DATE: 11-SEP-2014
DRAWN BY: K. FRIEDLAND
CHECKED BY: J. SALVATORI
SHEET 4 OF 69

COMPOSITE QUANTITY SHEET 3

FAIRFIELD BRF 0281(25)				FAIRFIELD BRO 1448(41)				TOTALS		DESCRIPTIONS			
ROADWAY	EROSION CONTROL	BRIDGE	FULL C.E. ITEMS	ROADWAY	EROSION CONTROL	BRIDGE	FULL C.E. ITEMS	GRAND TOTAL	FINAL	UNIT	ITEMS	ITEM NUMBER	ROUND
	20				25			45		CY	TOPSOIL	651.35	
		110				70		180		SY	GRUBBING MATERIAL	651.40	
	1							1		LS	EPSC PLAN (BRF 0281(25))	652.10	
					1			1		LS	EPSC PLAN (BRO 1448(41))	652.10	
	40				20			60		HR	MONITORING EPSC PLAN	652.20	
	1							1		LU	MAINTENANCE OF EPSC PLAN (N.A.B.I.) (BRF 0281(25))	652.30	
					1			1		LU	MAINTENANCE OF EPSC PLAN (N.A.B.I.) (BRO 1448(41))	652.30	
	60							60		SY	TEMPORARY EROSION MATTING	653.20	
	36				18			54		CY	VEHICLE TRACKING PAD	653.35	
	290				480			770		LF	BARRIER FENCE	653.50	
	280							280		LF	PROJECT DEMARCATION FENCE	653.55	
0.66				0.66				1.32		SF	TRAFFIC SIGNS, TYPE A	675.20	
16				30				46		LF	SQUARE TUBE SIGN POST AND ANCHOR	675.341	
				2				2		EACH	REMOVING SIGNS	675.50	
				2				2		EACH	ERECTING SALVAGED SIGNS	675.60	
4				4				8		EACH	DELINEATOR WITH STEEL POST	676.10	
		6				4		10		CY	SPECIAL PROVISION (HIGH PERFORMANCE CONCRETE, RAPID SET)(FPQ)	900.608	
						50		50		LF	SPECIAL PROVISION (PRE-EXCAVATION OF INTEGRAL ABUTMENT PILES, EARTH)	900.640	
						30		30		LF	SPECIAL PROVISION (PRE-EXCAVATION OF INTEGRAL ABUTMENT PILES, ROCK)	900.640	
		264						264		LF	SPECIAL PROVISION (PRESTRESSED CONCRETE SOLID SLABS)(15" x 48")	900.640	
						216		216		LF	SPECIAL PROVISION (PRESTRESSED CONCRETE SOLID SLABS)(21" x 48")	900.640	
0.5				0.5				1		LS	SPECIAL PROVISION (CPM SCHEDULE)	900.645	
1								1		LS	SPECIAL PROVISION (TRAFFIC CONTROL, ALL-INCLUSIVE)(BRF 0281(25))	900.645	
				1				1		LS	SPECIAL PROVISION (TRAFFIC CONTROL, ALL-INCLUSIVE)(BRO 1448(41))	900.645	
1								1		LU	SPECIAL PROVISION (INCENTIVE/DISINCENTIVE)(N.A.B.I.)	900.650	
1								1		LU	SPECIAL PROVISION (MAT DENSITY PAY ADJUSTMENT, SMALL QUANTITY)(N.A.B.I)	900.650	
1								1		LU	SPECIAL PROVISION (MIXTURE PAY ADJUSTMENT)(N.A.B.I.)	900.650	
185								185		TON	SPECIAL PROVISION ((BITUMINOUS CONCRETE PAVEMENT, SMALL QUANTITY)	900.680	

DETAILED SUMMARY OF QUANTITIES		
QUANTITIES	UNIT	ITEMS

PROJECT NAME: FAIRFIELD
PROJECT NUMBER: BRF 0281(25) & BRO 1448(41)

FILE NAME: s12j156qs_composite.dgn
PROJECT LEADER: R. YOUNG
DESIGNED BY: R. KLINEFELTER
COMPOSITE QUANTITY SHEET 3

PLOT DATE: 18-AUG-2014
DRAWN BY: K. FRIEDLAND
CHECKED BY: J. SALVATORI
SHEET 5 OF 69

STATE OF VERMONT
AGENCY OF TRANSPORTATION

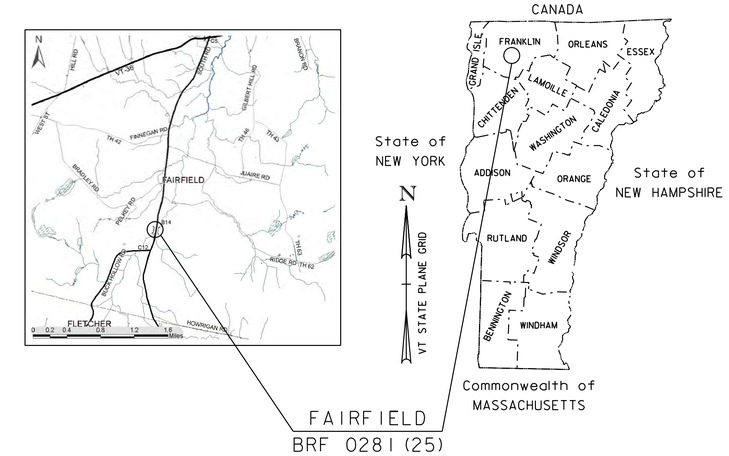

PROPOSED IMPROVEMENT
BRIDGE PROJECT

TOWN OF FAIRFIELD
COUNTY OF FRANKLIN

ROUTE NO : SOUTH ROAD, FAS 0281 (RURAL MAJOR COLLECTOR), CLASS 2 TOWN HIGHWAY BRIDGE NO : 14

PROJECT LOCATION: ON TH 1 (FAS 0281), APPROXIMATELY 2.5 MILES SOUTH OF ITS JUNCTION WITH VT 36.

PROJECT DESCRIPTION: REPLACEMENT OF EXISTING BRIDGE (BRIDGE NO. 14) WITH RELATED ROADWAY APPROACH AND CHANNEL WORK.

LENGTH OF STRUCTURE: 44.00 FEET
LENGTH OF ROADWAY: 131.00 FEET
LENGTH OF PROJECT: 175.00 FEET

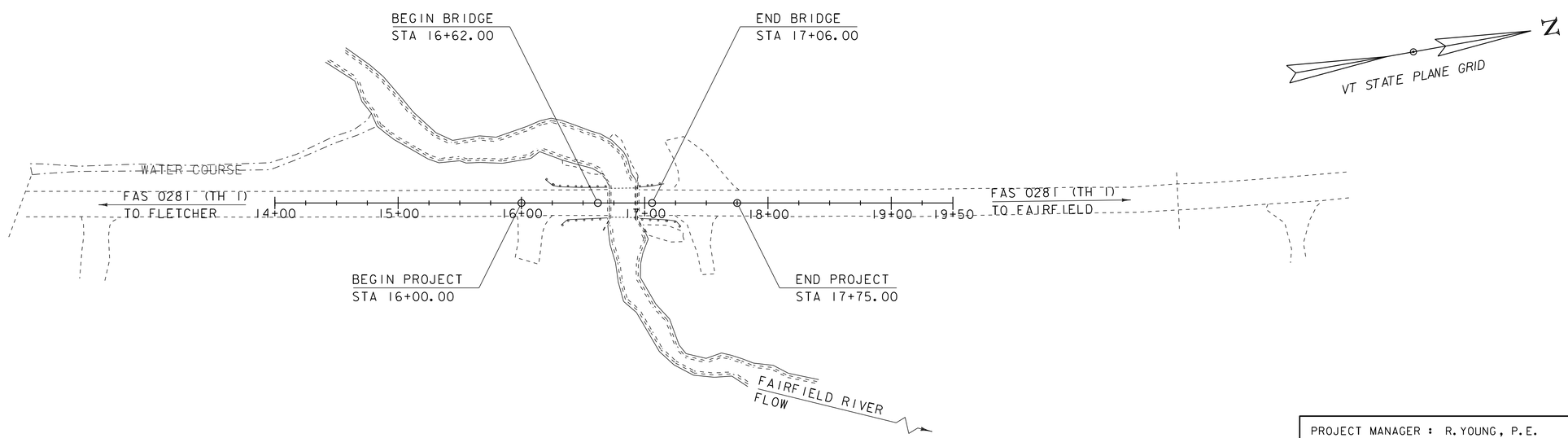

SCALE 1" = 50'-0"
50 0 50

THESE PLANS ARE SUBJECT TO SUCH ENGINEERING CHANGES AS MAY BE REQUIRED BY THE FEDERAL HIGHWAY ADMINISTRATION OR THE DIRECTOR OF PROGRAM DEVELOPMENT.

CONSTRUCTION IS TO BE CARRIED ON IN ACCORDANCE WITH THESE PLANS AND THE STANDARD SPECIFICATIONS FOR CONSTRUCTION DATED 2011, AS APPROVED BY THE FEDERAL HIGHWAY ADMINISTRATION ON JULY 20, 2011 FOR USE ON THIS PROJECT, INCLUDING ALL SUBSEQUENT REVISIONS AND SUCH REVISED SPECIFICATIONS AND SPECIAL PROVISIONS AS ARE INCORPORATED IN THESE PLANS.

QUALITY ASSURANCE PROGRAM : LEVEL 2

SURVEYED BY : L. ORVIS
SURVEYED DATE : 3/25/2012

DATUM
VERTICAL NAVD88
HORIZONTAL NAD (83) 2007

PROJECT MANAGER : R. YOUNG, P.E.

PROJECT NAME : FAIRFIELD
PROJECT NUMBER : BRF 0281 (25)

STATE OF VERMONT
AGENCY OF TRANSPORTATION

PRELIMINARY INFORMATION SHEET (BRIDGE)

Version
LRFD

INDEX OF SHEETS

PLAN SHEETS

1	COMPOSITE TITLE SHEET
2	COMPOSITE LEGEND SHEET
3 - 5	COMPOSITE QUANTITY SHEETS 1-3
6	TITLE SHEET - FAIRFIELD BRF 0281 (25)
7	PRELIMINARY INFORMATION SHEET
8	GENERAL NOTES
9 - 11	QUANTITY SHEET 1-3
12 - 13	TYPICAL SECTIONS 1-2
14	TIE SHEET
15	EXISTING CONDITIONS
16	LAYOUT SHEET
17	MAINLINE PROFILE & BANKING DIAGRAM
18	TRAFFIC LAYOUT SHEET
19	RAIL LAYOUT SHEET
20	BORING LAYOUT
21	BORING LOGS
22	FRAMING PLAN
23 - 24	SUPERSTRUCTURE DETAILS 1-2
25	BEARING DETAILS
26	APPROACH SLAB DETAILS
27	ABUTMENT PLAN
28	ABUTMENT REINFORCING
29	EPSC NARRATIVE
30	EPSC PLAN
31	EPSC DETAILS
32 - 35	MAINLINE SECTIONS
36 - 37	CHANNEL SECTIONS
38	TITLE SHEET - FAIRFIELD BRO 1448 (41)
39	PRELIMINARY INFORMATION SHEET
40	GENERAL NOTES
41 - 42	QUANTITY SHEETS 1-2
43 - 44	TYPICAL SECTIONS 1-2
45	TIE SHEET
46	EXISTING CONDITIONS
47	LAYOUT SHEET
48	MAINLINE PROFILE & BANKING DIAGRAM
49	TRAFFIC LAYOUT SHEET
50	RAIL LAYOUT SHEET
51	BORING LAYOUT
52 - 54	BORING LOGS 1-3
55	FRAMING PLAN
56 - 57	SUPERSTRUCTURE DETAILS 1-2
58	BEARING DETAILS
59	ABUTMENT PLAN
60	ABUTMENT REINFORCING
61	EPSC NARRATIVE
62	EPSC PLAN
63	EPSC DETAILS
64 - 66	MAINLINE SECTIONS 1-3
67 - 69	CHANNEL SECTIONS 1-3

STANDARDS LIST

G-1	STEEL BEAM GUARDRAIL DETAILS (POST, DELINEATOR, TYPICALS)	01-03-2000
G-1D	STEEL BEAM GUARDRAIL DETAILS (END TERMINAL, ANCHOR, MEDIAN)	01-03-2000
S-367A	BRIDGE RAILING, GALVANIZED HDSB/FASCIA MOUNTED/STEEL TUBING	05-24-2012
S-367B	GUARDRAIL APPROACH SECTION, GALVANIZED HD STEEL BEAM	05-24-2012
T-1	TRAFFIC CONTROL GENERAL NOTES	08-06-2012
T-10	CONVENTIONAL ROADS CONSTRUCTION APPROACH SIGNING	08-06-2012
T-11	CONSTRUCTION APPROACH SIGNING DIVIDED HIGHWAY ONE LANE CLOSED	08-06-2012
T-28	CONSTRUCTION SIGN DETAILS	08-06-2012
T-29	CONSTRUCTION SIGN DETAILS	08-06-2012
T-30	CONSTRUCTION SIGN DETAILS	08-06-2012
T-31	CONSTRUCTION SIGN DETAILS	08-06-2012
T-40	DELINEATORS AND MILEPOSTS	01-02-2013
T-42	BRIDGE NUMBER PLAQUE	04-09-2014
T-45	SQUARE TUBE SIGN POST AND ANCHOR	01-02-2013

STRUCTURES DETAIL SHEETS

SD-501.00	CONCRETE DETAILS AND NOTES	5/7/2010
SD-502.00	CONCRETE DETAILS AND NOTES	5/7/2010
SD-516.10	BRIDGE JOINT ASHPALTIC PLUG	5/7/2010
SD-601.00	STRUCTURAL STEEL DETAILS AND NOTES	6/4/2010

FINAL HYDRAULIC REPORT

HYDROLOGIC DATA

Date: April 2013

DRAINAGE AREA : 7.9 sq. mi.
CHARACTER OF TERRAIN : Mix of fields and forest, rural
STREAM CHARACTERISTICS : Incised and alluvial
NATURE OF STREAMBED : Silt, sand and gravel

PEAK FLOW DATA

Q 2.33 =	360 cfs	Q 50 =	1150 cfs
Q 10 =	670 cfs	Q 100 =	1320 cfs
Q 25 =	920 cfs	Q 500 =	1740 cfs

DATE OF FLOOD OF RECORD: Unknown
ESTIMATED DISCHARGE: Unknown
WATER SURFACE ELEV.: Unknown
NATURAL STREAM VELOCITY : @ Q50 = 7.4 fps
ICE CONDITIONS : Moderalte
DEBRIS: Little to moderate
DOES THE STREAM REACH MAXIMUM HIGHWATER ELEV. RAPIDLY? No
IS ORDINARY RISE RAPID? No
IS STAGE AFFECTED BY UPSTREAM OR DOWNSTREAM CONDITIONS? No
IF YES, DESCRIBE:

WATERSHED STORAGE: <1%
HEADWATERS:
UNIFORM: X
IMMEDIATELY ABOVE SITE:

EXISTING STRUCTURE INFORMATION

STRUCTURE TYPE: Single span concrete slab bridge
YEAR BUILT: 1949, reconstructed in 2004
CLEAR SPAN(NORMAL TO STREAM): 23'
VERTICAL CLEARANCE ABOVE STREAMBED: ~7'
WATERWAY OF FULL OPENING: 130 sq. ft.
DISPOSITION OF STRUCTURE: Remove and replace
TYPE OF MATERIAL UNDER SUBSTRUCTURE: See borings

WATER SURFACE ELEVATIONS AT:

Q2.33 =	598.7'	VELOCITY =	5.6 fps
Q10 =	600.1'	"	8.4 fps
Q25 =	602.2'	"	11.7 fps
Q50 =	602.6'	"	8.3 fps
Q100 =	602.9'	"	9.0 fps

LONG TERM STREAMBED CHANGES: None noted

IS THE ROADWAY OVERTOPPED BELOW Q100: Yes
FREQUENCY: Below Q50
RELIEF ELEVATION: 602.7'
DISCHARGE OVER ROAD @Q100: 280 cfs

UPSTREAM STRUCTURE

TOWN:	Fairfield	DISTANCE:	2200'
HIGHWAY # :	TH 3	STRUCTURE #:	BR 12
CLEAR SPAN:	21'	CLEAR HEIGHT:	8'
YEAR BUILT:	1996	FULL WATERWAY:	
STRUCTURE TYPE:	Precast Concrete Box		

DOWNSTREAM STRUCTURE

TOWN:	Fairfield	DISTANCE:	2800'
HIGHWAY # :	TH 62	STRUCTURE #:	BR 39
CLEAR SPAN:	20'	CLEAR HEIGHT:	11'
YEAR BUILT:	1963	FULL WATERWAY:	
STRUCTURE TYPE:	Concrete Slab Bridge		

LRFR LOAD RATING FACTORS

LOADING LEVELS	TRUCK						
	H-20	HL-93	3S2	6 AXLE	3A. STR.	4A. STR.	5A. SEMI
TONNAGE	**20**	**36**	**36**	**66**	**30**	**34.5**	**38**
INVENTORY	1.8	1.11					
POSTING							
OPERATING	2.34	1.44	2.35	1.29	1.73	1.59	1.9
COMMENTS:							

PROPOSED STRUCTURE

STRUCTURE TYPE: Solid Slab

CLEAR SPAN(NORMAL TO STREAM): 40'
VERTICAL CLEARANCE ABOVE STREAMBED: ~8'
WATERWAY OF FULL OPENING: 210 sq. ft.

WATER SURFACE ELEVATIONS AT:

Q2.33 =	598.7'	VELOCITY=	4.5 fps
Q10 =	599.8'	"	6.2 fps
Q25 =	600.5'	"	7.7 fps
Q50 =	601.1'	"	9.2 fps
Q100 =	601.5'	"	10.4 fps

IS THE ROADWAY OVERTOPPED BELOW Q100: No
FREQUENCY: N/A
RELIEF ELEVATION: 602.7'
DISCHARGE OVER ROAD @Q100: N/A

AVERAGE LOW ELEVATION OF SUPERSTRUCTURE: 602.4'
VERTICAL CLEARANCE: @ Q50 = 1.3'

SCOUR: Contraction scour at Q100 = 1.0'

REQUIRED CHANNEL PROTECTION: Stone Fill, Type III

PERMIT INFORMATION

		DEPTH OR ELEVATION:
AVERAGE DAILY FLOW:	20 cfs	
ORDINARY LOW WATER:	10 cfs	1.5'
ORDINARY HIGH WATER:	155 cfs	3.0'

TEMPORARY BRIDGE REQUIREMENTS

STRUCTURE TYPE: None required. Detour to be used.
CLEAR SPAN (NORMAL TO STREAM):
VERTICAL CLEARANCE ABOVE STREAMBED:
WATERWAY AREA OF FULL OPENING:

ADDITIONAL INFORMATION

TRAFFIC MAINTENANCE NOTES

1. MAINTAIN TRAFFIC ON AN OFF SITE DETOUR.
2. TRAFFIC SIGNALS ARE NOT NECESSARY.
3. SIDEWALKS ARE NOT NECESSARY

DESIGN VALUES

1.	DESIGN LIVE LOAD		HL-93
2.	FUTURE PAVEMENT	d_p:	0.0 INCH
3.	DESIGN SPAN	L:	43.00 FT
4.	MIN. MID-SPAN POS. CAMBER @ RELEASE (PRESTRESSED UNITS)	Δ:	- - -
5.	PRESTRESSING STRAND (0.60 INCH DIAMETER - LOW RELAX)	f_y:	270 KSI
6.	PRESTRESSED CONCRETE STRENGTH	f'_c:	8.0 KSI
7.	PRESTRESSED CONCRETE RELEASE STRENGTH	f'_{ci}:	6.0 KSI
8.	CONCRETE, HIGH PERFORMANCE CLASS AA	f'_c:	4.0 KSI
9.	CONCRETE, HIGH PERFORMANCE CLASS A	f'_c:	4.0 KSI
10.	CONCRETE, HIGH PERFORMANCE CLASS B	f'_c:	3.5 KSI
11.	CONCRETE, CLASS C	f'_c:	3.0 KSI
12.	REINFORCING STEEL	f_y:	60 KSI
13.	STRUCTURAL STEEL AASHTO M270	f_y:	- - -
14.	NOMINAL BEARING RESISTANCE OF SOIL	q_n:	4.0 KSF
15.	SOIL BEARING RESISTANCE FACTOR (REFER TO AASHTO LRFD)	ϕ:	- - -
16.	NOMINAL BEARING RESISTANCE OF ROCK	q_n:	10.0 KSF
17.	ROCK BEARING RESISTANCE FACTOR (REFER TO AASHTO LRFD)	ϕ:	- - -
18.	PILE RESISTANCE FACTOR	ϕ:	0.65
19.	LATERAL PILE DEFLECTION	Δ:	0.38 INCH
20.	BASIC WIND SPEED	V_{3s}:	- - -
21.	MINIMUM GROUND SNOW LOAD	p_g:	- - -
22.	SEISMIC DATA — PGA: 0.65	S_s:	- - -
		S_1:	- - -
23.			
24.			- - -
25.			- - -
26.			- - -

AS BUILT "REBAR" DETAIL

LEVEL I	LEVEL II	LEVEL III
TYPE:	TYPE:	TYPE:
GRADE:	GRADE:	GRADE:

TRAFFIC DATA

YEAR	ADT	DHV	% D	% T	ADTT
2015	580	90	50	6.7	40
2035	620	95	50	10.8	60

20 year ESAL for flexible pavement from 2015 to 2035 : 206000
40 year ESAL for flexible pavement from 2015 to 2055 : 506000
Design Speed : 40 mph

PROJECT NAME: **FAIRFIELD**
PROJECT NUMBER: **BRF 0281 (25)**

FILE NAME: **s12j156excel.dgn**
PROJECT LEADER: **R. YOUNG**
DESIGNED BY: **R. KLINEFELTER**
PRELIMINARY INFORMATION SHEET

PLOT DATE: 8/18/2014
DRAWN BY: **K. FRIEDLAND**
CHECKED BY: **J. SALVATORI**
SHEET 7 OF 69

GENERAL

1. ALL MATERIALS AND CONSTRUCTION SHALL CONFORM TO THE VERMONT AGENCY OF TRANSPORTATION 2011 STANDARD SPECIFICATIONS FOR CONSTRUCTION, THE 2012 AASHTO LRFD BRIDGE DESIGN SPECIFICATIONS, AND THEIR LATEST REVISIONS.

2. ALL PRECAST/PRESTRESSED CONCRETE ELEMENTS SHALL BE FABRICATED TO THE SPECIFIED DIMENSIONS AND ERECTED IN THE SPECIFIED LOCATIONS, ALL WITHIN TOLERANCES DEFINED ON THE PLANS AND IN THE PRECAST/PRESTRESSED CONCRETE INSTITUTE TOLERANCE MANUAL FOR PRECAST AND PRESTRESSED CONCRETE CONSTRUCTION, MNL 135-00, AND ITS LATEST REVISIONS.

3. ALL DIMENSIONS ARE HORIZONTAL OR VERTICAL, AND ARE GIVEN AT 68 DEGREES FAHRENHEIT, UNLESS NOTED OTHERWISE.

4. THE WEARING SURFACE SHALL BE SHIMMED TRANSVERSELY AS NECESSARY TO ACCOUNT FOR DIFFERENTIAL CAMBER OF THE ADJACENT PRESTRESSED SLABS.

TRAFFIC CONTROL

5. THE CONTRACTOR SHALL BE RESPONSIBLE FOR SUPPLYING A SITE SPECIFIC TRAFFIC CONTROL PACKAGE IDENTIFYING CONSTRUCTION ACTIVITIES BEFORE, DURING, AND AFTER THE BRIDGE CLOSURE PERIOD. THE CONTRACTOR SHALL SUBMIT A DETAILED TRAFFIC CONTROL PLAN TO THE PROJECT MANAGER FOR ALL STAGES OF CONSTRUCTION, FOR APPROVAL PER SUBSECTION 105.03. ALL COSTS SHALL BE INCLUDED IN ITEM 900.645, "SPECIAL PROVISION (TRAFFIC CONTROL, ALL-INCLUSIVE) (BRF 0281(25))". SEE SPECIAL PROVISIONS FOR ADDITIONAL INFORMATION.

6. ALL ITEMS REQUIRED TO IMPLEMENT THE CONTRACTOR'S TRAFFIC CONTROL PLAN WILL NOT BE PAID FOR DIRECTLY BUT WILL BE CONSIDERED INCLUDED IN THE BID PRICE FOR ITEM 900.645, "SPECIAL PROVISION (TRAFFIC CONTROL, ALL-INCLUSIVE)(BRF 0281(25))".

7. THE CONTRACTOR IS NOT RESPONSIBLE FOR THE OFF-SITE DETOUR. THE CONTRACTOR SHALL NOTIFY THE TOWN A MINIMUM OF TWO WEEKS IN ADVANCE OF THE BRIDGE CLOSURE PERIOD.

8. ALL SIGNING SHALL BE IN ACCORDANCE WITH THE LATEST EDITION OF THE MUTCD. FOR ADDITIONAL SIGNING INSTRUCTIONS SEE THE T SERIES OF THE STANDARDS. WHERE CONFLICTS EXIST, THE MUTCD SHALL GOVERN.

EARTHWORK

9. REMOVAL OF THE EXISTING STRUCTURE SHALL BE PAID FOR UNDER ITEM 529.15, "REMOVAL OF STRUCTURE". THIS WORK SHALL INCLUDE REMOVAL OF ANY PORTIONS OF THE EXISTING ABUTMENTS THAT FALL OUTSIDE THE LIMITS OF STRUCTURE EXCAVATION OR UNCLASSIFIED CHANNEL EXCAVATION.

10. THE "STONE FILL, TYPE III" UNDER THE BRIDGE AS SHOWN IN THE PLANS SHALL BE PLACED BEFORE THE PRESTRESSED SLABS ARE SET.

CONCRETE AND REINFORCING STEEL

11. TEST BARS SHALL BE PROVIDED IN ACCORDANCE WITH THE "VERMONT AGENCY OF TRANSPORTATION MATERIAL SAMPLING MANUAL" AVAILABLE ON THE AGENCY WEBSITE. A MINIMUM OF TWO TEST SECTIONS ARE REQUIRED FOR EACH SIZE, BRAND, AND GRADE OR TYPE OF REINFORCING. SEE THE MANUAL FOR ACCEPTABLE DIMENSIONS OF TEST SECTIONS. ALL COSTS ASSOCIATED WITH PROVIDING BARS FOR TESTING SHALL BE INCLUDED IN THE BID PRICE FOR EACH 540.10, 900.640, "SPECIAL PROVISION, (PRESTRESSED CONCRETE SOLID SLABS)(15" x 48")", AND 900.645, "SPECIAL PROVISION, (CONTRACTOR-FABRICATED PRECAST CONCRETE STRUCTURE)" CONTRACT ITEM AS APPROPRIATE.

12. WATER REPELLENT, SILANE SHALL BE FURNISHED IN ACCORDANCE WITH SECTION 514 AND SHALL BE APPLIED TO ALL EXPOSED CONCRETE ON THE BRIDGE SUPERSTRUCTURE AND SUBSTRUCTURE, WITH THE EXCEPTION OF THE BOTTOM OF THE SLABS BETWEEN THE DRIP NOTCHES. ALL COSTS ASSOCIATED WITH APPLYING SILANE SHALL BE INCLUDED IN THE BID PRICE FOR EACH 540.10, 900.640, "SPECIAL PROVISION, (PRESTRESSED CONCRETE SOLID SLABS)(15" x 48")", AND 900.645, "SPECIAL PROVISION, (CONTRACTOR-FABRICATED PRECAST CONCRETE STRUCTURE)" CONTRACT ITEM AS APPROPRIATE.

13. CONCRETE FOR APPROACH SLAB CLOSURE POURS AND ABUTMENT PILE CAVITIES SHALL MEET THE REQUIREMENTS OF ITEM 900.608, "SPECIAL PROVISION (HIGH PERFORMANCE CONCRETE, RAPID SET)(FPQ)".

14. GROUT FOR SHEAR KEYS BETWEEN THE PRESTRESSED SLABS SHALL BE MORTAR, TYPE IV IN ACCORDANCE WITH SECTION 510 – PRESTRESSED CONCRETE. GROUT FOR ANCHOR BOLTS SHALL BE MORTAR, TYPE IV IN ACCORDANCE WITH SECTION 531 – BRIDGE BEARING DEVICES. THE CONTRACTOR SHALL SUBMIT A GROUTING PROCEDURE PROPOSAL TO THE ENGINEER, INCLUDING A PREMIX NAME BRAND FOR APPROVAL.

15. ALL REINFORCING STEEL SHALL BE DETAILED AND FABRICATED USING PROCEDURES AND TOLERANCES IN ACCORDANCE WITH APPLICABLE PUBLICATIONS OF THE "CONCRETE REINFORCING STEEL INSTITUTE".

16. ALL REINFORCING STEEL IN THE PRESTRESSED SLABS, APPROACH SLABS, APPROACH SLAB CLOSURE POURS, AND ABUTMENTS & WINGWALLS ABOVE THE BRIDGE SEAT SHALL MEET THE REQUIREMENTS FOR LEVEL II CORROSION RESISTANCE IN ACCORDANCE WITH SECTION 507.

17. REINFORCING STEEL IN THE ABUTMENTS & WINGWALLS BELOW THE BRIDGE SEAT SHALL MEET THE REQUIREMENTS FOR LEVEL I CORROSION RESISTANCE IN ACCORDANCE WITH SECTION 507.

18. ALL COSTS ASSOCIATED WITH THE APPROACH SLAB CLOSURE POUR REINFORCING SHALL BE INCLUDED IN THE BID PRICE FOR EACH 540.10 AND 900.645, "SPECIAL PROVISION, (CONTRACTOR-FABRICATED PRECAST CONCRETE STRUCTURE)" CONTRACT ITEM AS APPROPRIATE.

19. CORRUGATED STEEL PIPES IN THE PRECAST ABUTMENTS FOR PILE CAVITIES AND ANCHOR BOLT CAVITIES SHALL MEET THE REQUIREMENTS OF SUBSECTION 711.01, BE COATED IN ACCORDANCE WITH AASHTO M 218, AND BE TYPE 1. ALL COSTS ASSOCIATED WITH PLACING THE CORRUGATED STEEL PIPES SHALL BE INCLUDED IN THE BID PRICE FOR EACH 540.10 AND 900.645, "SPECIAL PROVISION, (CONTRACTOR-FABRICATED PRECAST CONCRETE STRUCTURE)" CONTRACT ITEM AS APPROPRIATE.

20. CORRUGATED POST-TENSIONING DUCTS IN THE PRESTRESSED SLABS AND PRECAST APPROACH SLABS FOR ANCHOR BOLT AND DOWEL CONNECTIONS SHALL BE CONSTRUCTED FROM EITHER POLYETHYLENE OR POLYPROPYLENE. THE DUCT SHALL HAVE A MINIMUM MATERIAL THICKNESS OF 0.080 IN. +/- 0.010 IN. AND SHALL HAVE A WHITE COATING ON THE OUTSIDE OR SHALL BE OF WHITE MATERIAL WITH ULTRAVIOLET STABILIZERS ADDED. POLYETHYLENE DUCT SHALL BE FABRICATED FROM RESINS MEETING OR EXCEEDING THE REQUIREMENTS OF ASTM D 3350 WITH A CELL CLASSIFICATION OF 345464A. POLY PROPYLENE DUCT SHALL BE FABRICATED FROM RESINS MEETING OR EXCEEDING THE REQUIREMENTS OF ASTM D 4101 WITH A CELL CLASSIFICATION RANGE OF PP0340B44544 TO PP0340B65884. ALL COSTS ASSOCIATED WITH PLACING THE DUCTS SHALL BE INCLUDED IN THE BID PRICE FOR EACH 540.10, 900.640, "SPECIAL PROVISION, (PRESTRESSED CONCRETE SOLID SLABS)(15" x 48")", AND 900.645, "SPECIAL PROVISION, (CONTRACTOR-FABRICATED PRECAST CONCRETE STRUCTURE)" CONTRACT ITEM AS APPROPRIATE.

PRECAST ABUTMENTS AND APPROACH SLABS

21. CONCRETE COMPRESSIVE STRENGTH: f'c = 5 KSI.

22. PROPOSED SEQUENCE OF SUBSTRUCTURE CONSTRUCTION:
    a. PREPARE AND GRADE FOUNDATION TO REQUIRED ELEVATION.
    b. DRIVE PILES.
    c. PLACE PRECAST ABUTMENTS.
    d. INSTALL ANCHOR BOLTS AND SECURE IN FINAL POSITION.
    e. FILL ABUTMENT PILE CAVITIES WITH ITEM 900.608, "SPECIAL PROVISION (HIGH PERFORMANCE CONCRETE, RAPID SET)(FPQ)".
    f. GROUT ANCHOR BOLTS IN ABUTMENT ANCHOR BOLT CAVITIES.
    g. THE PILE CAVITY CONCRETE SHALL ATTAIN A MINIMUM COMPRESSIVE STRENGTH OF 3.5 KSI BEFORE ABUTMENT BACKFILL IS PLACED AND PRESTRESSED SLABS ARE ERECTED.

23. ALTERNATE SEQUENCE OF CONSTRUCTION MAY BE SUBMITTED FOR APPROVAL BY THE PROJECT MANAGER.

PRESTRESSED SOLID SLABS

24. DESIGN VALUES:
    a. CONCRETE COMPRESSIVE STRENGTH: f'c = 8 KSI
    b. CONCRETE COMPRESSIVE STRENGTH AT RELEASE: f'ci = 6 KSI
    c. PRESTRESSING STRANDS: 0.6 INCH DIAMETER, 270 KSI, LOW-RELAXATION 7-WIRE STRANDS
    d. JACKING FORCE PER PRESTRESSING STRAND = 44 KIPS
    e. POST-TENSIONING STRANDS: 0.6 INCH DIAMETER, 270 KSI, LOW RELAXATION 7-WIRE STRANDS.
    f. JACKING FORCE PER POST-TENSIONING STRAND = 47 KIPS
    g. THERE SHALL BE 2 STRANDS PER POST-TENSIONING DUCT.
    h. ASSUMED MODULUS OF ELASTICITY FOR THE STRAND IS 28,500 KSI.

25. DUE TO STABILITY CONCERNS AT THE ABUTMENTS DURING THE ERECTION OF THE SUPERSTRUCTURE, THE CONTRACTOR SHALL SUBMIT THE ERECTION PLAN A MINIMUM OF 30 WORKING DAYS PRIOR TO THE BRIDGE CLOSURE PERIOD. UNDER NO CIRCUMSTANCES SHALL A BRIDGE CLOSURE PERIOD BEGIN PRIOR TO HAVING AN ACCEPTED ERECTION PLAN.

26. THE METHOD OF FORMING FOR SUBSEQUENT POURS AFTER PLACING PRECAST/PRESTRESSED SUPERSTRUCTURE UNITS SHALL BE DETERMINED BY THE CONTRACTOR. THE CONTRACTOR IS ENCOURAGED TO WORK WITH THE FABRICATOR IF ADDITIONAL SUPPORTS MAY BE REQUIRED. IN NO CASE SHALL THE CONTRACTOR ATTACH ADDITIONAL FORM OR SCREED SUPPORTS BY DRILLING OR SIMILAR MEANS INTO ANY PRECAST/PRESTRESSED SUPERSTRUCTURE UNIT.

27. ALL POST-TENSIONING STRAND SHALL CONFORM TO THE REQUIREMENTS OF SECTION 510 – PRESTRESSED CONCRETE. PAYMENT FOR GALVANIZED ANCHOR ASSEMBLIES, DUCTS, AND POST-TENSIONING STRANDS SHALL BE INCLUDED UNDER ITEM 900.640, "SPECIAL PROVISION, (PRESTRESSED CONCRETE SOLID SLABS)(15" x 48")".

28. PROPOSED SEQUENCE OF SUPERSTRUCTURE CONSTRUCTION:
    a. LAY OUT WORKING LINES THE ENTIRE WIDTH OF THE BRIDGE ALONG CENTERLINE OF BEARING, MEASURED FROM A SINGLE WORKING POINT. THE WORKING LINES SHALL BE BASED ON THE NOMINAL PRESTRESSED SLAB WIDTHS.
    b. PREPARE GRADE FOR APPROACH SLABS.
    c. VERIFY THE BRIDGE SEAT ELEVATIONS AND TAKE CORRECTIVE ACTION IF NECESSARY.
    d. POWER WASH ALL SURFACES THAT WILL BE IN CONTACT WITH GROUT.
    e. INSTALL BEARINGS.
    f. ERECT THE PRESTRESSED SLABS TO FIT WITHIN THE WORKING LINES.
    g. ADJUST THE EXTERIOR SLAB SO THAT THE FASCIA FITS SNUG AGAINST THE CORK ON INTERIOR OF CHEEK WALL.
    h. INSTALL HARDWOOD WEDGES BETWEEN ADJACENT SLABS TO MAINTAIN PROPER JOINT OPENING (A MINIMUM OF ONE WEDGE AT EACH TRANSVERSE POST-TENSIONING LOCATION).
    i. INSTALL BACKER ROD BELOW THE BOTTOM OF THE KEYWAY.
    j. INSTALL POST-TENSIONING STRANDS AND TENSION TO 3 KIPS TO REMOVE SAG AND SEAT CHUCK.
    k. INSTALL PRECAST APPROACH SLABS.
    l. PUMP GROUT FROM LOW ENDS OF BRIDGE SEAT THROUGH ANCHOR BOLT DUCTS CLOSEST TO EACH FASCIA TO FILL VOID BETWEEN BRIDGE SEAT AND BOTTOM OF PRESTRESSED SLABS AND APPROACH SLABS. PUMP GROUT UNTIL ALL ANCHOR BOLT DUCTS AND APPROACH SLAB DOWEL DUCTS ARE FULL.
    m. INSTALL ANCHOR PLATES, WASHERS AND NUTS FOR ANCHOR BOLTS.
    n. GROUT SHEAR KEYS.
    o. FULLY TENSION TRANSVERSE TENDONS PER SUBSECTION 510.14.
    p. INSTALL APPROACH SLAB CLOSURE POUR REINFORCING AND COMPLETE CLOSURE POUR.

29. ALTERNATE SEQUENCE OF CONSTRUCTION MAY BE SUBMITTED FOR APPROVAL BY THE PROJECT MANAGER.

H-PILES

30. THE PILES SHALL BE HP 12x84.

31. TO PREVENT DAMAGE TO THE PILES, PILE SHOES ARE REQUIRED AND SHALL CONFORM TO SUBSECTION 505.04 (f).

32. THE PILES SHALL BE DRIVEN TO A NOMINAL AXIAL RESISTANCE OF 290 KIPS AND EMBEDDED A MINIMUM OF 20 FEET BELOW THE PILE CAP.

33. A MINIMUM OF ONE DYNAMIC PILE LOADING TEST SHALL BE PERFORMED PER ABUTMENT.

34. THE TOPS OF THE PILES AFTER DRIVING SHALL NOT VARY FROM THE POSITION SHOWN ON THE PLANS BY MORE THAN 3 INCHES. THE PILE ORIENTATION SHALL NOT VARY BY MORE THAN 5 DEGREES. THE CONTRACTOR SHALL DEMONSTRATE TO THE SATISFACTION OF THE ENGINEER HOW THE TOLERANCES WILL BE MET. THESE MEASURES SHALL BE DEMONSTRATED IN A SUBMITTAL TO BE ACCEPTED BEFORE PILE DRIVING COMMENCES.

35. FOR ESTIMATING PURPOSES, THE PILE TIP ELEVATIONS WERE ASSUMED AS SHOWN ON THE BORING LOGS. THE ACTUAL IN PLACE LENGTHS MAY VARY.

MISCELLANEOUS

36. ITEM 520.10, "MEMBRANE WATERPROOFING, SPRAY APPLIED" SHALL BE APPLIED TO THE BRIDGE DECK AS PER THE MANUFACTURER'S INSTRUCTIONS AND EXTEND ONTO THE APPROACH SLABS TWO FEET BEYOND THE BEGIN BRIDGE/END OF BRIDGE. IF TRAFFIC WILL BE DRIVING DIRECTLY ON THE MEMBRANE SURFACE, AN AGGREGATE WEARING SURFACE SHALL BE ADHERED TO THE TOP MEMBRANE COAT PER THE SPECIFICATIONS.

37. EMULSIFIED ASPHALT SHALL BE APPLIED TO ALL COLD PLANED SURFACES AT A RATE OF 0.080 GAL/SY AND BETWEEN EACH LIFT OF PAVEMENT AT A RATE OF 0.040 GAL/SY.

38. EXISTING CONDITIONS SHEET HAS BEEN INCLUDED FOR THE CONTRACTOR TO USE FOR SUBMITTALS.

STATE OF VERMONT
AGENCY OF TRANSPORTATION

QUANTITY SHEET 1

SUMMARY OF ESTIMATED QUANTITIES / TOTALS / DESCRIPTIONS

ROADWAY	EROSION CONTROL	BRIDGE	FULL C.E. ITEMS	GRAND TOTAL	FINAL	UNIT	ITEMS	ITEM NUMBER	ROUND
1				1		LS	CLEARING AND GRUBBING, INCLUDING INDIVIDUAL TREES AND STUMPS (BRF 0281(25))	201.10	
400				400		CY	COMMON EXCAVATION	203.15	
		270		270		CY	UNCLASSIFIED CHANNEL EXCAVATION	203.27	
1				1		CY	TRENCH EXCAVATION OF EARTH, EXPLORATORY (N.A.B.I.)	204.22	
		50		50		CY	STRUCTURE EXCAVATION	204.25	
		10		10		CY	GRANULAR BACKFILL FOR STRUCTURES	204.30	
240				240		SY	COLD PLANING, BITUMINOUS PAVEMENT	210.10	
450				450		CY	SUBBASE OF CRUSHED GRAVEL, COARSE GRADED	301.25	
10				10		CY	AGGREGATE SURFACE COURSE	401.10	
15				15		CY	AGGREGATE SHOULDERS, IN PLACE	402.10	
6				6		CWT	EMULSIFIED ASPHALT	404.65	
1				1		LU	PRICE ADJUSTMENT, ASPHALT CEMENT (N.A.B.I.)	406.50	
		1		1		LS	FURNISHING EQUIPMENT FOR DRIVING PILING (BRF 0281(25))	504.10	
		300		300		LF	STEEL PILING, HP 12 X 84	505.165	
		2		2		EACH	DYNAMIC PILE LOADING TEST	505.45	
		2400		2400		LB	STRUCTURAL STEEL (FPQ)	506.60	
		220		220		LF	GROUTING SHEAR KEYS	510.24	
		48		48		LF	BRIDGE EXPANSION JOINT, ASPHALTIC PLUG	516.10	
		125		125		SY	MEMBRANE WATERPROOFING, SPRAY APPLIED	520.10	
48				48		LF	JOINT SEALER, HOT POURED	524.11	
		100		100		LF	BRIDGE RAILING, GALVANIZED HDSB/FASCIA MOUNTED/STEEL TUBING	525.44	
		1		1		EACH	REMOVAL OF STRUCTURE (605 SF - EST.)	529.15	
		12		12		EACH	BEARING DEVICE ASSEMBLY, PLAIN ELASTOMERIC PAD	531.16	
							BEGIN OPTION AA		
		1		1		LS	PRECAST CONCRETE STRUCTURE (ABUTMENT #1)(BRF 0281(25))	540.10	
		1		1		LS	SPECIAL PROVISION (CONTRACTOR-FABRICATED PRECAST CONCRETE STRUCTURE)(ABUTMENT #1)(BRF 0281(25))	900.645	
							END OPTION AA		
							BEGIN OPTION CC		
		1		1		LS	PRECAST CONCRETE STRUCTURE (ABUTMENT #2)(BRF 0281(25))	540.10	
		1		1		LS	SPECIAL PROVISION (CONTRACTOR-FABRICATED PRECAST CONCRETE STRUCTURE)(ABUTMENT #2)(BRF 0281(25))	900.645	
							END OPTION CC		
							BEGIN OPTION EE		
		1		1		LS	PRECAST CONCRETE STRUCTURE (APPROACH SLAB #1)	540.10	
		1		1		LS	SPECIAL PROVISION (CONTRACTOR-FABRICATED PRECAST CONCRETE STRUCTURE)(APPROACH SLAB #1)	900.645	
							END OPTION EE		

DETAILED SUMMARY OF QUANTITIES

QUANTITIES	UNIT	ITEMS
		EARTHWORK SUMMARY
400	CY	COMMON EXCAVATION (400*1.0)
202.5	CY	UNCLASSIFIED EXCAVATION (270*0.75)
37.5	CY	STRUCTURE EXCAVATION (50*0.75)
640	CY	SUBTOTAL
10	CY	ROUNDING
650	CY	TOTAL FILL AVAILABLE
0	CY	TOTAL FILL REQUIRED
650	CY	TOTAL WASTE
		SPECIAL PROVISION (BITUMINOUS CONCRETE PAVEMENT, SMALL QUANTITY)
45	TON	TYPE IIS
140	TON	TYPE IVS
185	TON	TOTAL SUPERPAVE

PROJECT NAME: FAIRFIELD
PROJECT NUMBER: BRF 0281(25)

FILE NAME: s12j156qs.dgn
PROJECT LEADER: R. YOUNG
DESIGNED BY: R. KLINEFELTER
QUANTITY SHEET 1
PLOT DATE: 11-SEP-2014
DRAWN BY: K. FRIEDLAND
CHECKED BY: J. SALVATORI

STATE OF VERMONT
AGENCY OF TRANSPORTATION

QUANTITY SHEET 2

SUMMARY OF ESTIMATED QUANTITIES					TOTALS		DESCRIPTIONS			
ROADWAY	EROSION CONTROL	BRIDGE	FULL C.E. ITEMS		GRAND TOTAL	FINAL	UNIT	ITEMS	ITEM NUMBER	ROUND
								BEGIN OPTION FF		
		1			1		LS	PRECAST CONCRETE STRUCTURE (APPROACH SLAB #2)	540.10	
		1			1		LS	SPECIAL PROVISION (CONTRACTOR-FABRICATED PRECAST CONCRETE STRUCTURE)(APPROACH SLAB #2)	900.645	
								END OPTION FF		
	1				1		TON	DUST AND ICE CONTROL WITH CALCIUM CHLORIDE	609.15	
25					25		CY	STONE FILL, TYPE I	613.10	
		170			170		CY	STONE FILL, TYPE III	613.12	
58					58		LF	STEEL BEAM GUARDRAIL, GALVANIZED	621.20	
4					4		EACH	ANCHOR FOR STEEL BEAM RAIL	621.60	
4					4		EACH	GUARDRAIL APPROACH SECTION, GALV HD STEEL BEAM	621.737	
148					148		LF	REMOVAL AND DISPOSAL OF GUARDRAIL	621.80	
500					500		HR	FLAGGERS	630.15	
			0.5		0.5		LS	FIELD OFFICE, ENGINEERS	631.10	
			0.5		0.5		LS	TESTING EQUIPMENT, CONCRETE	631.16	
			1		1		LS	TESTING EQUIPMENT, BITUMINOUS	631.17	
			1500		1500		DL	FIELD OFFICE TELEPHONE (N.A.B.I.)	631.26	
0.5					0.5		LS	MOBILIZATION/DEMOBILIZATION	635.11	
650					650		LF	4 INCH YELLOW LINE	646.21	
600					600		SY	GEOTEXTILE FOR ROADBED SEPARATOR	649.11	
		190			190		SY	GEOTEXTILE UNDER STONE FILL	649.31	
	180				180		SY	GEOTEXTILE FOR SILT FENCE, WOVEN WIRE REINFORCED	649.515	
	60				60		SY	GEOTEXTILE FOR FILTER CURTAIN	649.61	
	5				5		LB	SEED	651.15	
	40				40		LB	FERTILIZER	651.18	
	1				1		TON	AGRICULTURAL LIMESTONE	651.20	
	1				1		TON	HAY MULCH	651.25	
	20				20		CY	TOPSOIL	651.35	
		110			110		SY	GRUBBING MATERIAL	651.40	
	1				1		LS	EPSC PLAN (BRF 0281(25))	652.10	
	40				40		HR	MONITORING EPSC PLAN	652.20	
	1				1		LU	MAINTENANCE OF EPSC PLAN (N.A.B.I.) (BRF 0281(25))	652.30	
	60				60		SY	TEMPORARY EROSION MATTING	653.20	
	36				36		CY	VEHICLE TRACKING PAD	653.35	
	290				290		LF	BARRIER FENCE	653.50	
	280				280		LF	PROJECT DEMARCATION FENCE	653.55	
0.66					0.66		SF	TRAFFIC SIGNS, TYPE A	675.20	
16					16		LF	SQUARE TUBE SIGN POST AND ANCHOR	675.341	
4					4		EACH	DELINEATOR WITH STEEL POST	676.10	
		6			6		CY	SPECIAL PROVISION (HIGH PERFORMANCE CONCRETE, RAPID SET)(FPQ)	900.608	
		264			264		LF	SPECIAL PROVISION (PRESTRESSED CONCRETE SOLID SLABS)(15" x 48")	900.640	

DETAILED SUMMARY OF QUANTITIES

QUANTITIES	UNIT	ITEMS

PROJECT NAME: FAIRFIELD
PROJECT NUMBER: BRF 0281(25)

FILE NAME: s12j156qs.dgn
PROJECT LEADER: R. YOUNG
DESIGNED BY: R. KLINEFELTER
QUANTITY SHEET 2

PLOT DATE: 11-SEP-2014
DRAWN BY: K. FRIEDLAND
CHECKED BY: J. SALVATORI
SHEET 10 OF 69

STATE OF VERMONT
AGENCY OF TRANSPORTATION

QUANTITY SHEET 3

SUMMARY OF ESTIMATED QUANTITIES									TOTALS		DESCRIPTIONS				DETAILED SUMMARY OF QUANTITIES		
						ROADWAY	EROSION CONTROL	BRIDGE	FULL C.E. ITEMS	GRAND TOTAL	FINAL	UNIT	ITEMS	ITEM NUMBER	ROUND	QUANTITIES	UNIT	ITEMS
						0.5				0.5		LS	SPECIAL PROVISION (CPM SCHEDULE)	900.645				
						1				1		LS	SPECIAL PROVISION (TRAFFIC CONTROL, ALL-INCLUSIVE)(BRF 0281(25))	900.645				
						1				1		LU	SPECIAL PROVISION (INCENTIVE/DISINCENTIVE)(N.A.B.I.)	900.650				
						1				1		LU	SPECIAL PROVISION (MAT DENSITY PAY ADJUSTMENT, SMALL QUANTITY)(N.A.B.I)	900.650				
						1				1		LU	SPECIAL PROVISION (MIXTURE PAY ADJUSTMENT)(N.A.B.I.)	900.650				
						185				185		TON	SPECIAL PROVISION ((BITUMINOUS CONCRETE PAVEMENT, SMALL QUANTITY)	900.680				

PROJECT NAME: FAIRFIELD
PROJECT NUMBER: BRF 0281(25)

FILE NAME: s12j156qs.dgn
PROJECT LEADER: R. YOUNG
DESIGNED BY: R. KLINEFELTER
QUANTITY SHEET 3

PLOT DATE: 18-AUG-2014
DRAWN BY: K. FRIEDLAND
CHECKED BY: J. SALVATORI
SHEET 11 OF 69

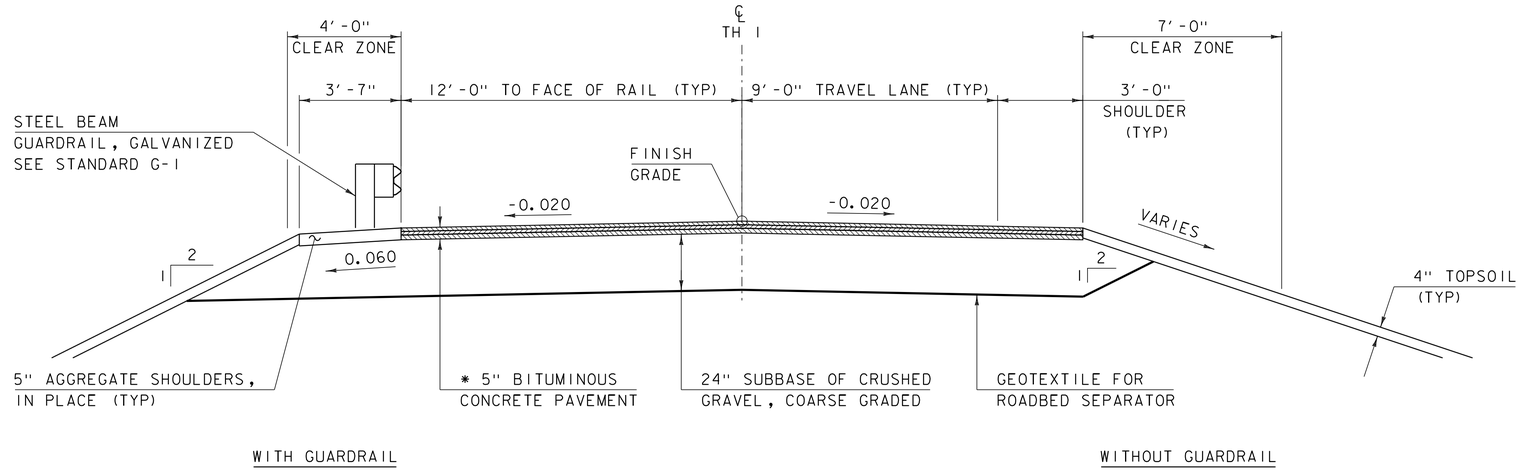

ROADWAY TYPICAL SECTION

SCALE 3/8" = 1'-0"

* 1½" SUPERPAVE BITUMINOUS CONCRETE PAVEMENT TYPE IVS, OVER
1½" SUPERPAVE BITUMINOUS CONCRETE PAVEMENT TYPE IVS, OVER
2" SUPERPAVE BITUMINOUS CONCRETE PAVEMENT TYPE IIS

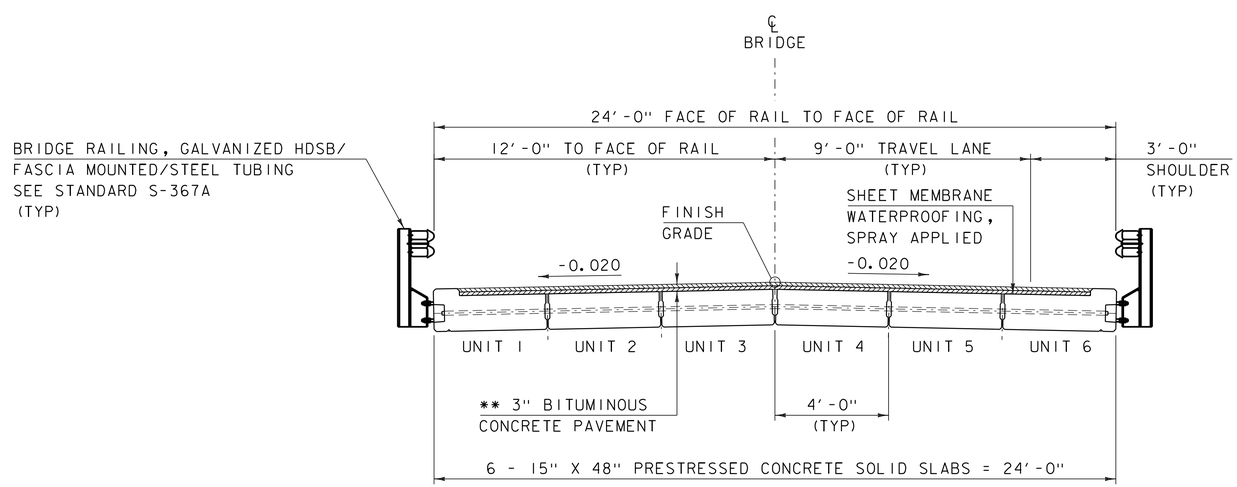

BRIDGE TYPICAL SECTION

SCALE 3/8" = 1'-0"

** 1½" SUPERPAVE BITUMINOUS CONCRETE PAVEMENT TYPE IVS, OVER
1½" SUPERPAVE BITUMINOUS CONCRETE PAVEMENT TYPE IVS

MATERIAL TOLERANCES

(IF USED ON PROJECT)

SURFACE	
- PAVEMENT (TOTAL THICKNESS)	+/- ¼"
- AGGREGATE SURFACE COURSE	+/- ½"
SUBBASE	+/- 1"
SAND BORROW	+/- 1"

PROJECT NAME: FAIRFIELD
PROJECT NUMBER: BRF 0281(25)

FILE NAME: s12j156typical.dgn
PROJECT LEADER: R. YOUNG
DESIGNED BY: R. KLINEFELTER
TYPICAL SECTIONS 1

PLOT DATE: 18-AUG-2014
DRAWN BY: K. FRIEDLAND
CHECKED BY: J. SALVATORI
SHEET 12 OF 69

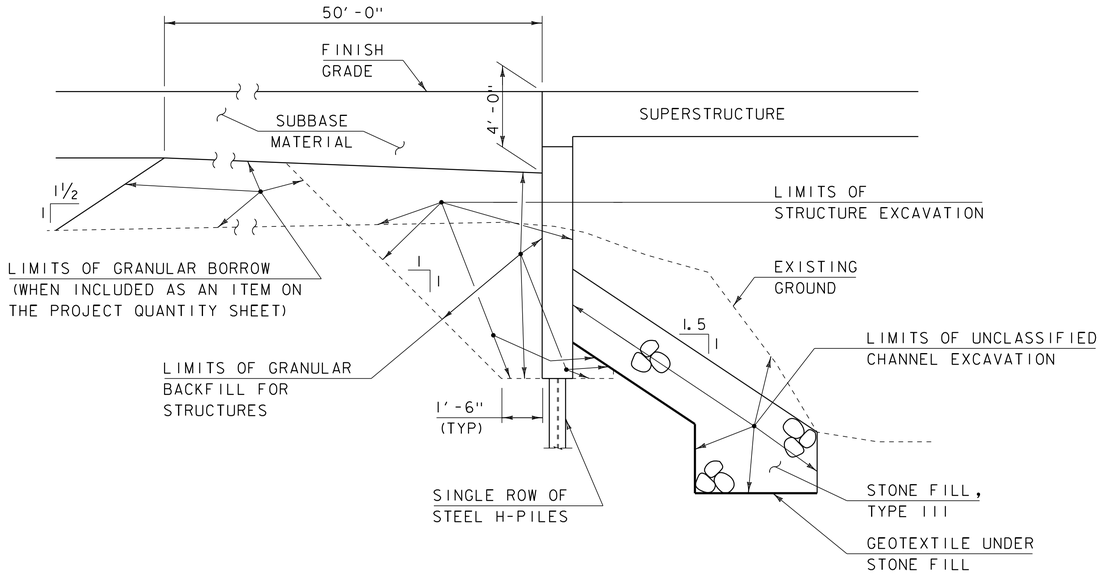

TYPICAL INTEGRAL ABUTMENT SECTION

(NOT TO SCALE)

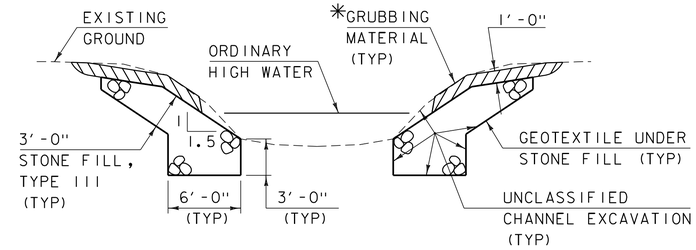

TYPICAL CHANNEL SECTION

(NOT TO SCALE)

*GRUBBING MATERIAL SHALL NOT BE PLACED ON THE STONE FILL IN THE AREA UNDER THE BRIDGE. WHENEVER CHANNEL SLOPE INTERSECTS ROADWAY SUBBASE, GRUBBING MATERIAL SHALL BEGIN AT THE BOTTOM OF SUBBASE.

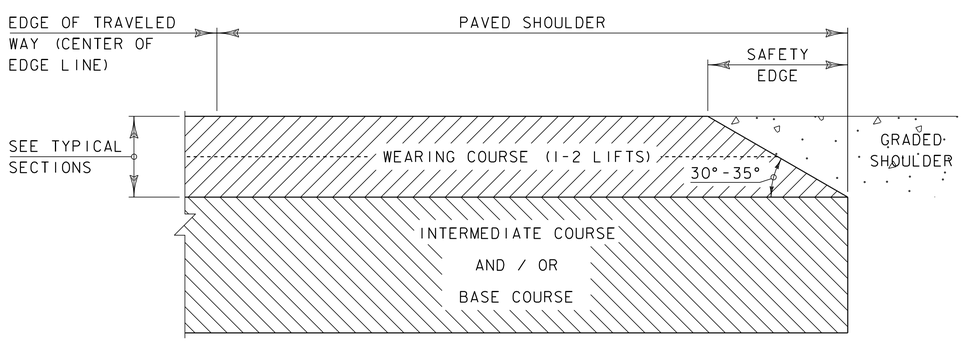

SAFETY EDGE DETAIL

NOT TO SCALE

1. LEVELING COURSE MAY INCLUDE THE "SAFETY EDGE" AT THE CONTRACTOR'S CHOICE.
2. THE EDGE OF PAVEMENT SHALL BE FORMED IN SUCH A WAY THAT THE BITUMINOUS CONCRETE PAVEMENT IS EXTRUDED OR COMPRESSED TO FORM THE 30 TO 35 DEGREE ANGLE. DEVICES THAT SIMPLY STRIKE-OFF THE MIX WITHOUT PROVIDING ANY COMPACTIVE EFFORT WILL NOT BE ALLOWED.
3. THE PAVED SHOULDER EXTENDS FROM THE EDGE OF TRAVELED WAY TO THE EDGE OF THE WEARING COURSE, INCLUDING THE "SAFETY EDGE".

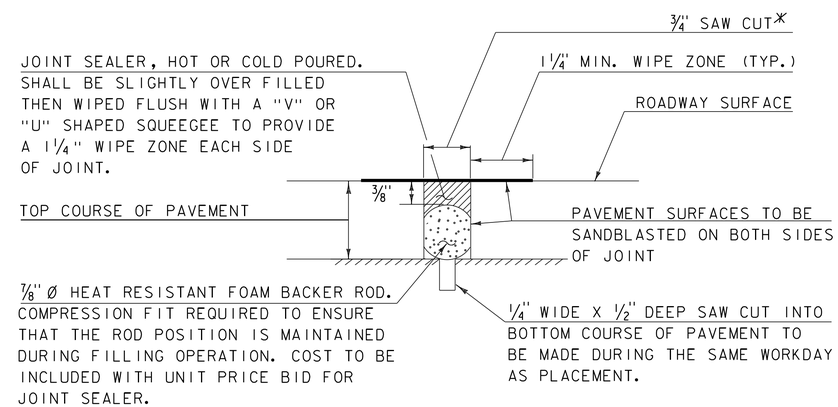

SAWED PAVEMENT JOINT DETAIL

(NOT TO SCALE)

*JOINT IS TO BE LOCATED ACCURATELY BY STRING LINING, OR OTHER MEANS, PRIOR TO PAVING, SO THAT THE SAW CUTS WILL BE MADE DIRECTLY OVER THE END OF CONCRETE DECK. JOINT SHALL BE CUT DRY IN A SINGLE PASS AND BE SEALED WITHIN 24 HOURS OR PRIOR TO EXPOSURE TO TRAFFIC. JOINT SHALL BE CLEANED PRIOR TO APPLYING THE JOINT SEALER.

PROJECT NAME: FAIRFIELD	
PROJECT NUMBER: BRF 028I(25)	
FILE NAME: s12j156typical.dgn	PLOT DATE: 18-AUG-2014
PROJECT LEADER: R. YOUNG	DRAWN BY: K. FRIEDLAND
DESIGNED BY: R. KLINEFELTER	CHECKED BY: J. SALVATORI
TYPICAL SECTIONS 2	SHEET 13 OF 69

GPS CONTROL POINTS

Zone: Vermont 4400
Geoid: GEOID09 (Conus)

HVCTRL #1

FFP1 [TEMPORARY]
NORTH = 825855.295
EAST = 1520013.268
ELEV. = 616.620

GENERAL LOCATION, FAIRFIELD, VT.
THE MARK IS A 14 CM (6 INCH) SPIKE DRIVEN INTO THE GROUND.
TO REACH FROM THE INTERSECTION OF VT ROUTE 36 AND SOUTH ROAD IN FAIRFIELD, GO SOUTH ALONG SOUTH ROAD FOR 2.3 MI (3.7 KM) TO THE SITE OF THE MARK ON THE LEFT SET IN THE SHOULDER ON THE EAST SIDE OF SOUTH ROAD. IT IS ABOUT 0.3 MI (0.5 KM) NORTH ALONG SOUTH ROAD FROM THE INTERSECTION OF BUCK HOLLOW ROAD.

HVCTRL #2

FFP2 [TEMPORARY]
NORTH = 827674.479
EAST = 1521551.675
ELEV. = 602.150

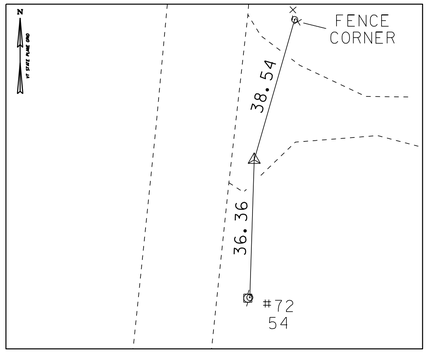

GENERAL LOCATION, FAIRFIELD, VT.
THE MARK IS A 14 CM (6 INCH) LONG SPIKE DRIVEN INTO THE GROUND.
TO REACH FROM THE INTERSECTION OF VT ROUTE 36 AND SOUTH ROAD IN FAIRFIELD, GO SOUTH ALONG SOUTH ROAD FOR 2.6 MI (4.2 KM) TO THE INTERSECTION OF BUCK HOLLOW ROAD RIGHT.* TURN RIGHT AND GO WEST ALONG BUCK HOLLOW ROAD FOR 0.2 MI (0.3 KM) TO THE MARK ON THE RIGHT SET IN THE SHOULDER ON THE NORTH SIDE OF THE ROAD.

TRAVERSE TIES

HVCTRL #3

NORTH = 827176.115
EAST = 1521472.496
ELEV. = 602.691

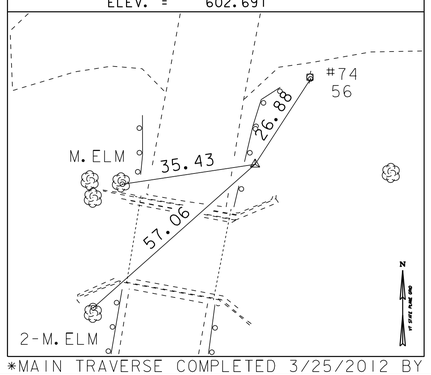

HVCTRL #4

NORTH = 826705.981
EAST = 1521357.860
ELEV. = 605.531

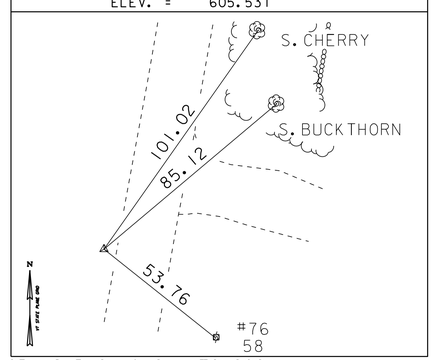

NORTH =	
EAST =	
ELEV. =	

NORTH =	
EAST =	
ELEV. =	

NORTH =	
EAST =	
ELEV. =	

*MAIN TRAVERSE COMPLETED 3/25/2012 BY L. ORVIS P.C. & G. HITCHCOCK

DATUM	
VERTICAL	NAVD 88
HORIZONTAL	NAD 83(07)
ADJUSTMENT	COMPASS

PROJECT NAME: FAIRFIELD
PROJECT NUMBER: BRF 0281(25)

FILE NAME: s12j156tie.dgn
PROJECT LEADER: R. YOUNG
DESIGNED BY: R. KLINEFELTER
TIE SHEET

PLOT DATE: 18-AUG-2014
DRAWN BY: R. KLINEFELTER
CHECKED BY: J. SALVATORI
SHEET 14 OF 69

BINGHAMVILLE SILT LOAM
0-2% SLOPE
TYPE C SOIL
K VALUE = 0.49
NOT HIGHLY ERODIBLE

VT STATE PLANE GRID

FAIRFIELD RIVER FARM

FAIRCHILD, GEORGE

RIPARIAN BUFFER

FLOOD PLAIN

POPLAR

UNDERDRAIN 4" PVC

STONE DRIW

WATER COURSE

CLASS II WETLANDS

COTTONWOOD

ELM

TIE DIST = 57.06

TIE DIST = 35.43

TIE DIST = 26.88

FIELD DRIVE

EXISTING ROW

SOUTH ROAD (TH 1) TO FLETCHER

SOUTH RD (TH 1) TO FAIRFIELD

14+00 15+00 16+00 17+00 18+00 19+00 19+50

BRUSH

ROCK

AER E&T

COMB 75

STONE WALL

HEDGE

HVCTRL 3

HVCTRL 10

STONE FILL

APPLE

AER E&T COMB 74

GUY

COMB 73

THORNAPPLE

BENCHMARK 3
RR SPIKE IN TREE
ELEV = 599.89

FAIRFIELD RIVER FLOW

ARCH

EXISTING BRIDGE DATA
CONCRETE SLAB BUILT IN 1949
SPAN LENGTH = 23 FEET
STRUCTURE LENGTH = 26 FEET
DECK WIDTH OUT TO OUT = 27.4 FEET
BRIDGE WIDTH CURB TO CURB = 23.8 FEET

WINDSOR LOAMY FINE SAND
3-8% SLOPE
TYPE C SOIL
K VALUE = 0.17
NOT HIGHLY ERODIBLE

WINOOSKI SILT LOAM
0-3% SLOPE
TYPE C SOIL
K VALUE = 0.49
NOT HIGHLY ERODIBLE

EXISTING CONDITIONS

20 0 20
SCALE: 1" = 20'-0"

PROJECT NAME: FAIRFIELD	
PROJECT NUMBER: BRF 0281(25)	
FILE NAME: s12j156bdr_ero.dgn	PLOT DATE: 18-AUG-2014
PROJECT LEADER: R. YOUNG	DRAWN BY: K. FRIEDLAND
DESIGNED BY: R. KLINEFELTER	CHECKED BY: J. SALVATORI
EXISTING CONDITIONS	SHEET 15 OF 69

4" YELLOW LINE (DOUBLE)
STA 15+25.00 - 18+50.00 ℄

REMOVAL AND DISPOSAL OF GUARDRAIL
STA 16+19.00 - 16+70.00 LT
STA 16+32.00 - 16+70.00 RT
STA 16+95.00 - 17+16.00 LT
STA 16+96.00 - 17+29.00 RT

CONSTRUCT FIELD DRIVE
W/ 5'-0" PAVED APRON AND
6" AGGREGATE SURFACE COURSE BEYOND APRON
STA 15+82.22 - 16+32.62 RT
STA 17+34.00 - 17+94.84 LT

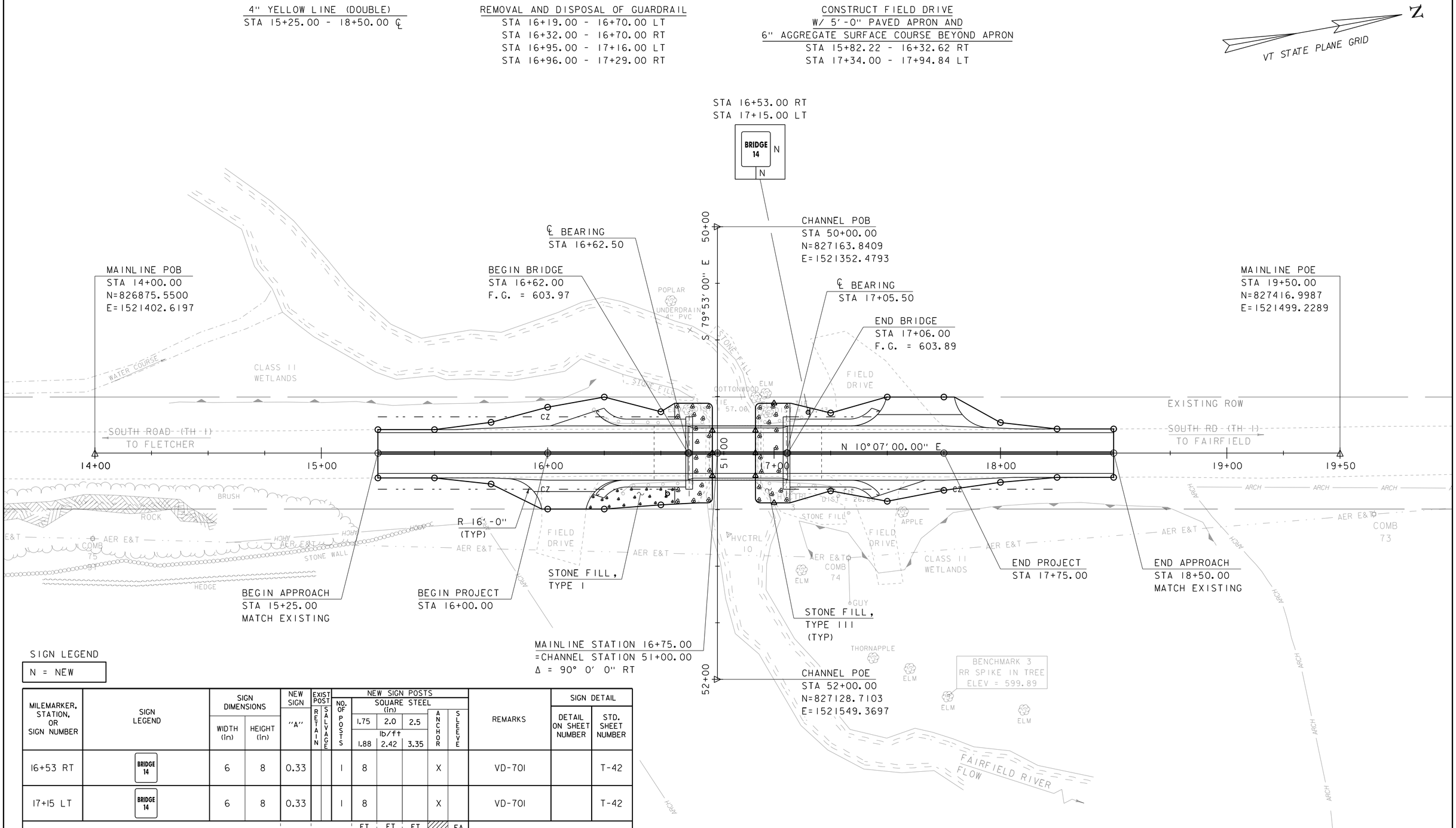

SIGN LEGEND

N = NEW

MILEMARKER, STATION, OR SIGN NUMBER	SIGN LEGEND	SIGN DIMENSIONS WIDTH (in)	SIGN DIMENSIONS HEIGHT (in)	NEW SIGN "A"	EXIST POST RETAIN	EXIST POST SALVAGE	NEW SIGN POSTS NO. OF POSTS	SQUARE STEEL (in) 1.75 lb/ft 1.88	2.0 lb/ft 2.42	2.5 lb/ft 3.35	ANCHOR	SLEEVE	REMARKS	SIGN DETAIL DETAIL ON SHEET NUMBER	SIGN DETAIL STD. SHEET NUMBER
16+53 RT	BRIDGE 14	6	8	0.33			1	8			X		VD-701		T-42
17+15 LT	BRIDGE 14	6	8	0.33			1	8			X		VD-701		T-42
								FT 16	FT	FT		EA			
TOTALS				SF 0.66				FT 16					SHS = STANDARD HIGHWAY SIGNS (MUTCD)		

FINAL POST LENGTHS ARE TO BE DETERMINED IN THE FIELD. POST SIZES ARE COMPUTED BASED ON INFORMATION FURNISHED ON THE STANDARD SHEETS AND THE VTRANS "SIGN POST DESIGN GUIDELINE."

LAYOUT SHEET

20 0 20

SCALE: 1" = 20'-0"

NOTE:
ADJUST NEW CENTERLINE AND EDGE LINES TO MATCH EXISTING LINES AT BEGIN/END APPROACH

PROJECT NAME: FAIRFIELD
PROJECT NUMBER: BRF 0281(25)

FILE NAME: s121j56bdr.dgn
PROJECT LEADER: R. YOUNG
DESIGNED BY: R. KLINEFELTER
LAYOUT SHEET

PLOT DATE: 18-AUG-2014
DRAWN BY: K. FRIEDLAND
CHECKED BY: J. SALVATORI
SHEET 16 OF 69

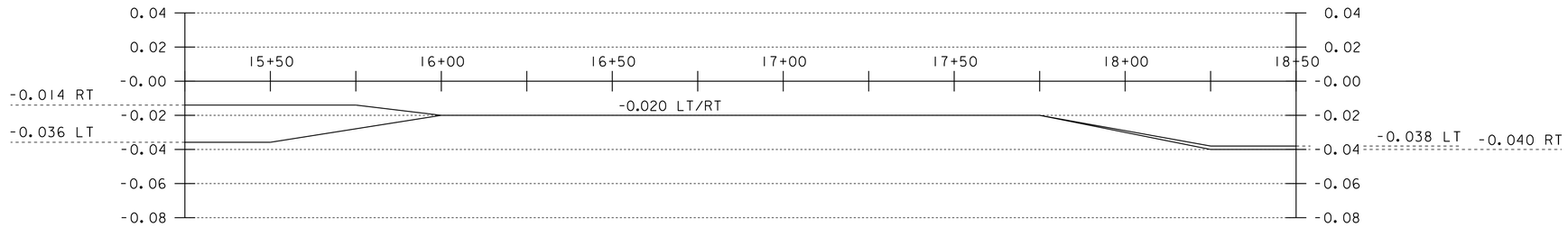

BANKING DIAGRAM

HORIZONTAL SCALE 1"=20'
NO VERTICAL SCALE

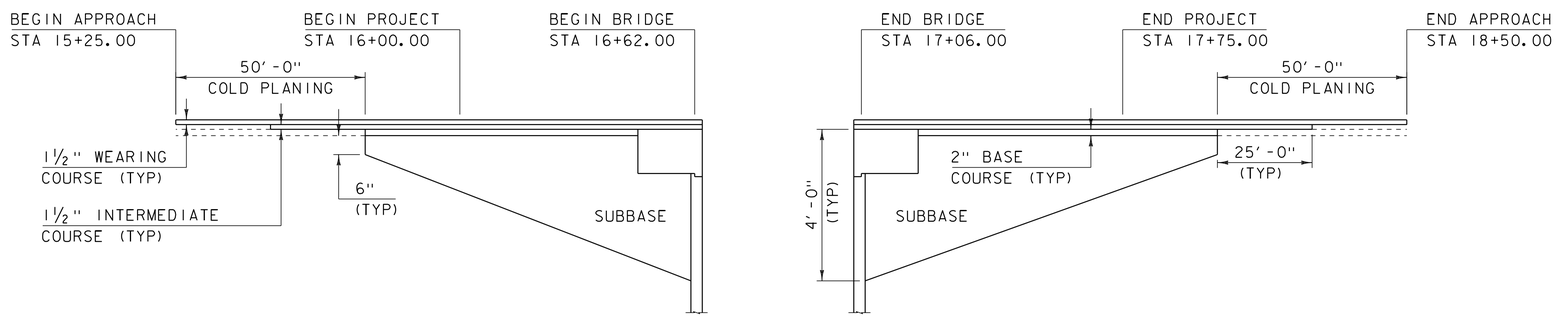

MATERIAL TRANSITION

HORIZONTAL SCALE 1"=20'
NO VERTICAL SCALE

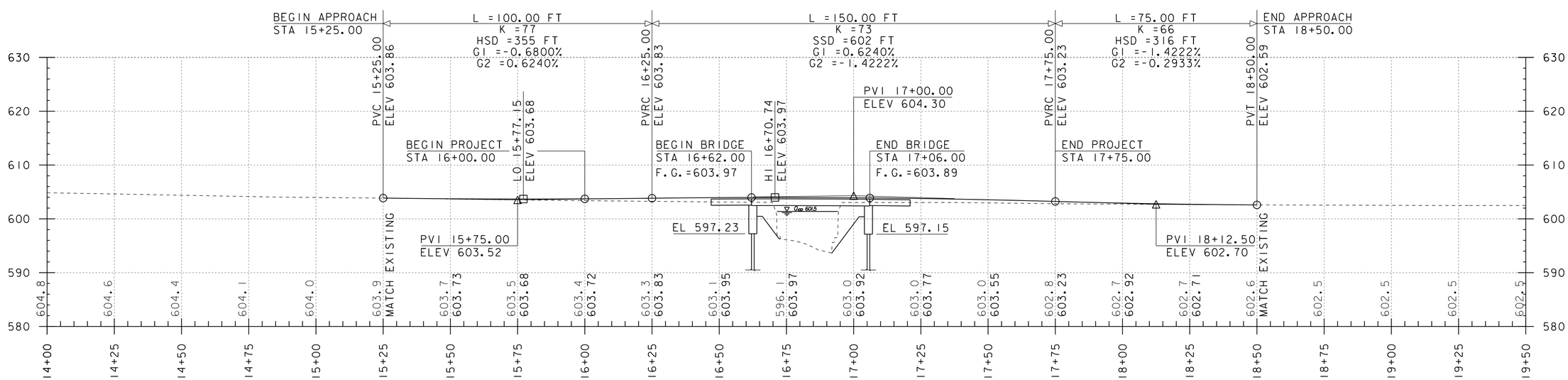

THE GRADES SHOWN TO THE NEAREST TENTH ARE THE ORIGINAL GROUND ELEVATIONS ALONG THE PROPOSED ALIGNMENT.

THE GRADES SHOWN TO THE NEAREST HUNDREDTH ARE THE FINISH GRADES ALONG THE PROPOSED ALIGNMENT.

MAINLINE PROFILE

HORIZONTAL SCALE 1"=20'
VERTICAL SCALE 1"=10'

PROJECT NAME: FAIRFIELD	
PROJECT NUMBER: BRF 028I(25)	
FILE NAME: s12j156profile.dgn	PLOT DATE: 18-AUG-2014
PROJECT LEADER: R. YOUNG	DRAWN BY: K. FRIEDLAND
DESIGNED BY: R. KLINEFELTER	CHECKED BY: J. SALVATORI
MAINLINE PROFILE & BANKING DIAGRAM	SHEET 17 OF 69

NOTES:

1. THE CONTRACTOR SHALL BE RESPONSIBLE FOR SIGNS AND BARRICADES SHOWN ON THIS SHEET. THEY SHALL BE PAID FOR UNDER ITEM 900.645, "SPECIAL PROVISION (TRAFFIC CONTROL, ALL-INCLUSIVE)".

2. TEMPORARY TRAFFIC BARRIER AT EACH END OF THE PROJECT SHALL BE FURNISHED IN ACCORDANCE WITH SECTION 621 AND PAYMENT SHALL BE CONSIDERED INCIDENTAL TO PAY ITEM 900.645, "SPECIAL PROVISION (TRAFFIC CONTROL, ALL-INCLUSIVE)".

3. SEE STANDARD T-10 FOR TYPICAL APPROACH SIGNING.

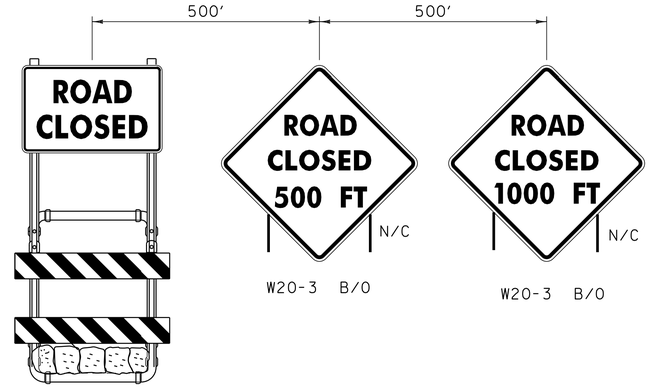

W20-3 B/O

W20-3 B/O

R11-2D B/W SIGN MOUNTED ON TYPE III BARRICADE (MODIFIED)

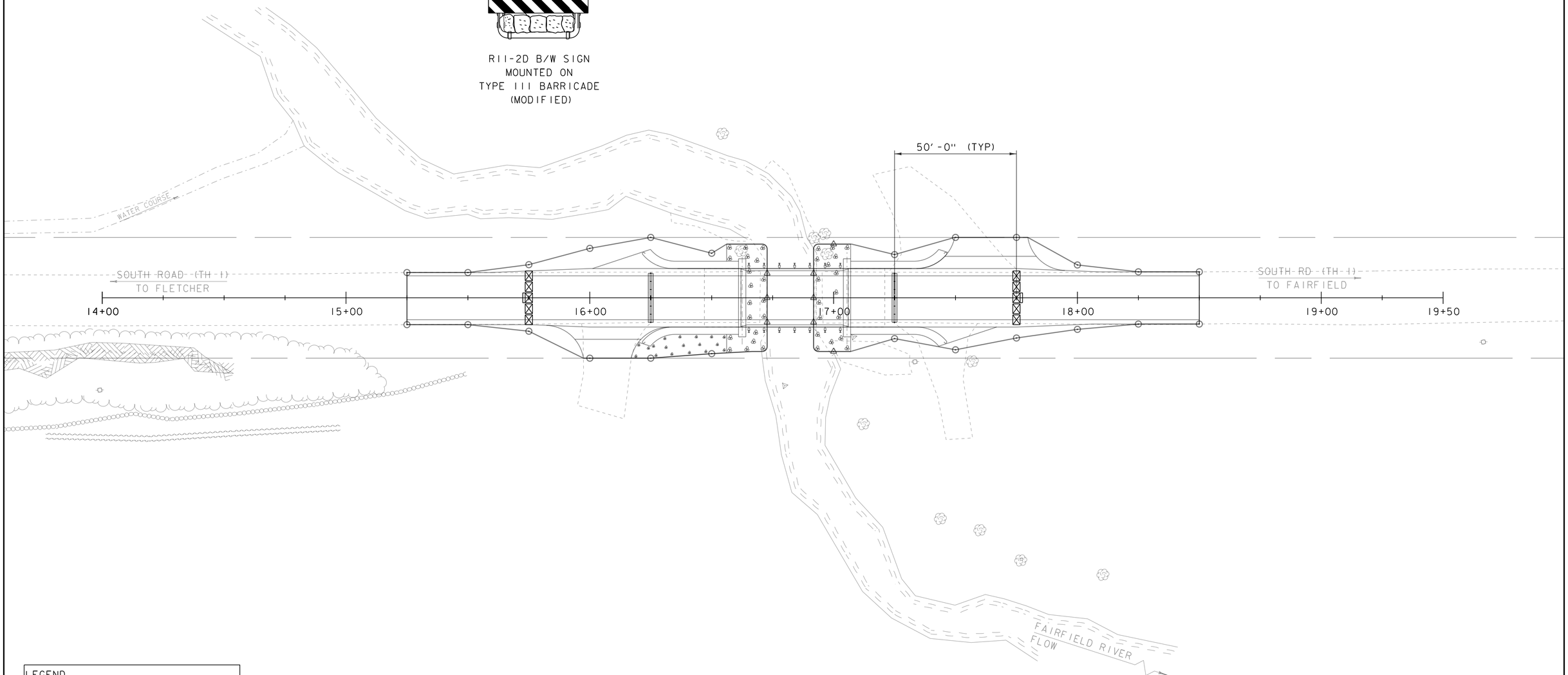

LEGEND
N/C - NEW/CONSTRUCTION ONLY
B/O - BLACK/ORANGE
B/W - BLACK/WHITE
⊠ - TYPE III BARRICADE
⊠ - TYPE III BARRICADE (MOD.)
═ TEMPORARY TRAFFIC BARRIER

TRAFFIC LAYOUT SHEET

SCALE 1" = 20'-0"

20 0 20

PROJECT NAME: FAIRFIELD	
PROJECT NUMBER: BRF 0281(25)	
FILE NAME: s121j56traff.dgn	PLOT DATE: 10-SEP-2014
PROJECT LEADER: R. YOUNG	DRAWN BY: K. FRIEDLAND
DESIGNED BY: R. KLINEFELTER	CHECKED BY: J. SALVATORI
TRAFFIC LAYOUT SHEET	SHEET 18 OF 69

DELINEATOR W/STEEL POST
STA 16+20 LT (GREEN)
STA 16+20 RT (BLUE)
STA 17+45 LT (GREEN)
STA 17+45 RT (BLUE)

ANCHOR FOR STEEL BEAM RAIL
STA 16+33 LT
STA 16+33 RT
STA 17+35 LT
STA 17+35 RT

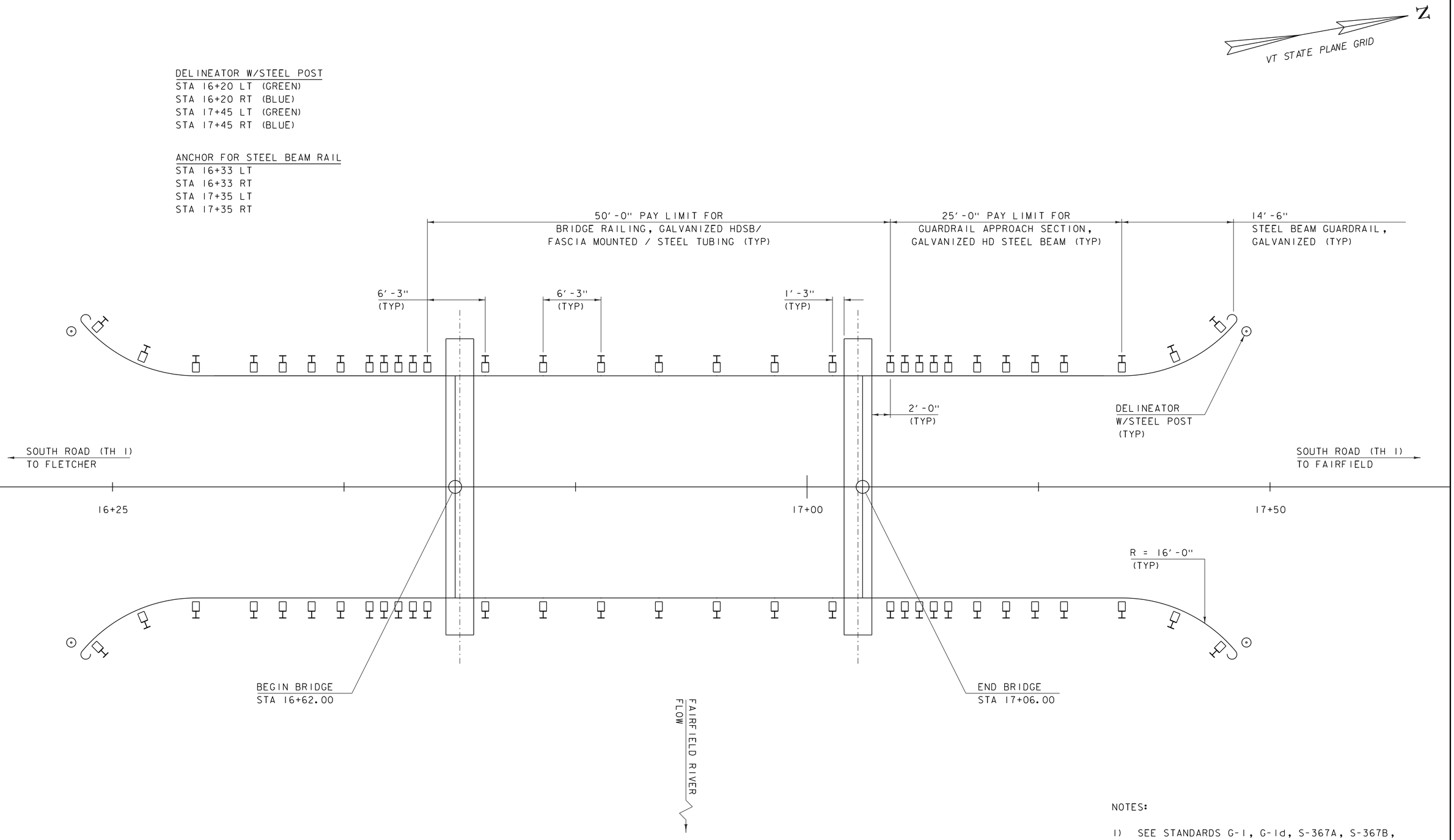

NOTES:

1) SEE STANDARDS G-1, G-1d, S-367A, S-367B, T-40 AND T-45 FOR FURTHER DETAILS.

RAIL LAYOUT SHEET

SCALE 1" = 5'-0"
5 0 5

PROJECT NAME: FAIRFIELD	
PROJECT NUMBER: BRF 0281(25)	
FILE NAME: s12j156rail.dgn	PLOT DATE: 18-AUG-2014
PROJECT LEADER: R. YOUNG	DRAWN BY: K. FRIEDLAND
DESIGNED BY: R. KLINEFELTER	CHECKED BY: J. SALVATORI
RAIL LAYOUT SHEET	SHEET 19 OF 69

SOIL CLASSIFICATION

AASHTO	
A1	Gravel and Sand
A3	Fine Sand
A2	Silty or Clayey Gravel and Sand
A4	Silty Soil - Low Compressibility
A5	Silty Soil - Highly Compressible
A6	Clayey Soil - Low Compressibility
A7	Clayey Soil - Highly Compressible

ROCK QUALITY DESIGNATION

R.Q.D. (%)	ROCK DESCRIPTION
<25	Very Poor
25 to 50	Poor
51 to 75	Fair
76 to 90	Good
>90	Excellent

SHEAR STRENGTH

UNDRAINED SHEAR STRENGTH IN P.S.F.	CONSISTENCY
<250	Very Soft
250-500	Soft
500-1000	Med. Stiff
1000-2000	Stiff
2000-4000	Very Stiff
>4000	Hard

CORRELATION GUIDE OF "N" TO DENSITY/CONSISTENCY

DENSITY (GRANULAR SOILS)		CONSISTENCY (COHESIVE SOILS)	
N	DESCRIPTIVE TERM	N	DESCRIPTIVE TERM
<5	Very Loose	<2	Very Soft
5-10	Loose	2-4	Soft
11-24	Med. Dense	5-8	Med. Stiff
25-50	Dense	9-15	Stiff
>50	Very Dense	16-30	Very Stiff
		31-60	Hard
		>60	Very Hard

COMMONLY USED SYMBOLS

▼	Water Elevation
⊗	Standard Penetration Boring
⊕	Auger Boring
⊙	Rod Sounding
S	Sample
N	Standard Penetration Test Blow Count Per Foot For: 2" O.D. Sampler 1 3/8" I.D. Sampler Hammer Weight Of 140 Lbs. Hammer Fall Of 30"
VS	Field Vane Shear Test
US	Undisturbed Soil Sample
B	Blast
DC	Diamond Core
MD	Mud Drill
WA	Wash Ahead
HSA	Hollow Stem Auger
AX	Core Size 1 1/8"
BX	Core Size 1 5/8"
NX	Core Size 2 1/8"
M	Double Tube Core Barrel Used
LL	Liquid Limit
PL	Plastic Limit
PI	Plasticity Index
NP	Non Plastic
w	Moisture Content (Dry Wgt. Basis)
D	Dry
M	Moist
MTW	Moist To Wet
W	Wet
Sat	Saturated
Bo	Boulder
Gr	Gravel
Sa	Sand
Si	Silt
Cl	Clay
HP	Hardpan
Le	Ledge
NLTD	No Ledge To Depth
CNPF	Can Not Penetrate Further
TLOB	Top of Ledge Or Boulder
NR	No Recovery
Rec.	Recovery
%Rec.	Percent Recovery
RQD	Rock Quality Designation
CBR	California Bearing Ratio
<	Less Than
>	Greater Than
R	Refusal (N > 100)
VTSPG	NAD83 - See Note 7

COLOR

blk	Black	pnk	Pink
bl	Blue	pu	Purple
brn	Brown	rd	Red
dk	Dark	tn	Tan
gry	Gray	wh	White
gn	Green	yel	Yellow
lt	Light	mltc	Multicolored
or	Orange		

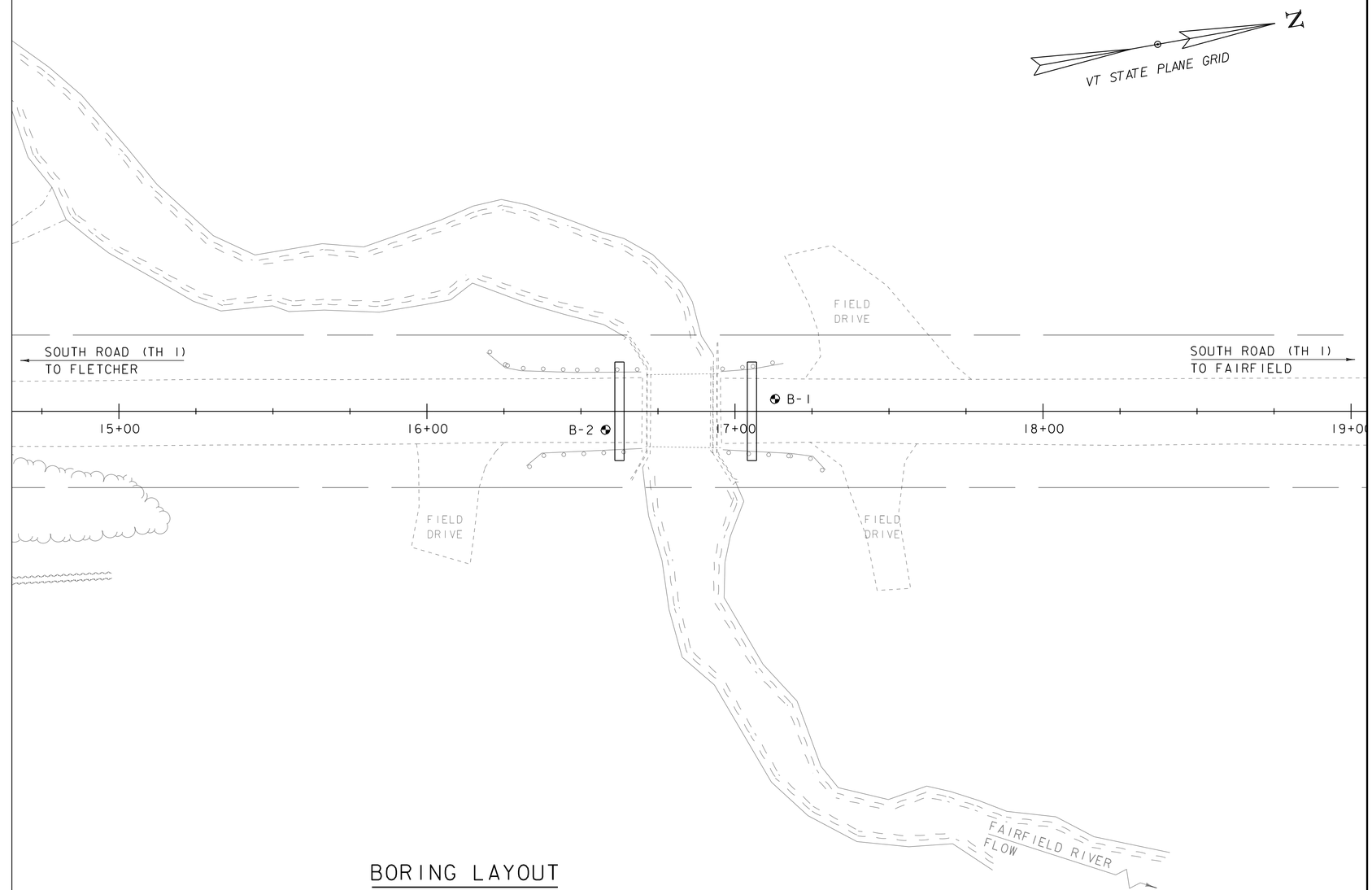

BORING LAYOUT

SCALE 1" = 20'-0"

20 0 20

DEFINITIONS (AASHTO)

BEDROCK (LEDGE) - Rock in its native location of indefinite thickness.

BOULDER - A rock fragment with an average dimension > 12 inches.

COBBLE - Rock fragments with an average dimension between 3 and 12 inches.

GRAVEL - Rounded particles of rock < 3" and > 0.0787" (#10 sieve).

SAND - Particles of rock < 0.0787" (#10 sieve) and > 0.0029" (#200 sieve).

SILT - Soil < 0.0029" (#200 sieve), non or slightly plastic and exhibits no strength when air-dried.

CLAY - Fine grained soil, exhibits plasticity when moist and considerable strength when air-dried.

VARVED - Alternate layers of silt and clay.

HARDPAN - Extremely dense soil, cemented layer, not softened when wet.

MUCK - Soft organic soil (containing > 10% organic material.

MOISTURE CONTENT - Weight of water divided by dry weight of soil.

FLOWING SAND - Granular soil so saturated (loose) that it flows into drill casing during extraction of wash rod.

STRIKE - Angle from magnetic north to line of intersection of bed with a horizontal plane.

DIP - Inclination of bed with a horizontal plane.

GENERAL NOTES

1. The subsurface explorations shown herein were made between 02/11/13 and 02/14/13 by New Hampshire Boring, Inc.
2. Soil and rock classifications, properties and descriptions are based on engineering interpretation from available subsurface information by the Agency and may not necessarily reflect actual variations in subsurface conditions that may be encountered between individual boring or sample locations.
3. Observed water levels and/or conditions indicated are as recorded at the time of exploration and may vary according to the prevailing rainfall, methods of exploration and other factors.
4. Engineering judgment was exercised in preparing the subsurface information presented herein. Analysis and interpretation of subsurface data was performed and interpreted for Agency design and estimating purposes. Presentation of the information in the Contract is intended to provide the Contractor access to the same data available to the Agency. The subsurface information is presented in good faith and is not intended as a substitute for personal investigation, independent interpretation, independent analysis or judgment by the Contractor.
5. Pictorial structure details shown on the boring plan layout or soils profile are for illustrative purposes only and may not accurately portray final contract details.
6. Terminology used on boring logs to describe the hardness, degree of weathering, and spacing of fractures, joints and other discontinuities in the bedrock is defined in the AASHTO Manual on Subsurface Investigations, 1988.
7. Northing and Easting coordinates are shown in Vermont State Plane Grid North American Datum 1983 in meters and survey feet.

BORING CHART

HOLE NO.	SURV. STATION	OFFSET	GROUND ELEV.	ELEV. TLOB
B1	17+13	4.0 LT	600.0	562.0
B2	16+58	6.0 RT	599.0	565.0

PROJECT NAME: FAIRFIELD
PROJECT NUMBER: BRF 0281(25)

FILE NAME: s12j156boring.dgn
PROJECT LEADER: R. YOUNG
DESIGNED BY: R. KLINEFELTER
BORING LAYOUT

PLOT DATE: 18-AUG-2014
DRAWN BY: K. FRIEDLAND
CHECKED BY: J. SALVATORI
SHEET 20 OF 69

STATE OF VERMONT
AGENCY OF TRANSPORTATION
MATERIALS & RESEARCH SECTION
SUBSURFACE INFORMATION

BORING LOG

FAIRFIELD
BRF 0281(25)
South Road, Fairfield, VT

Boring No.: B-2
Page No.: 1 of 1
Pin No.: 12J156
Checked By: J. MacGregor

Boring Crew: P. Schofield, K. Owens
Date Started: 2/13/13 Date Finished: 2/14/13
VTSPG NAD83: N 827129.99 ft E 1521444.47 ft
Station: 16+58.0 Offset: 6.0R
Ground Elevation: 599.0 ft

	Casing	Sampler
Type:	WB	SS
I.D.:	4 in	1.38 in
Hammer Wt:	300 lb.	140 lb.
Hammer Fall:	30 in.	30 in.
Hammer/Rod Type:	Manual/NW	
Rig:	TRUCK D50	CE = 1.0

Groundwater Observations		
Date	Depth (ft)	Notes
02/01/13	8.2	

ABUT. 1 BTM.
EL 597.23

EST. PILE TIP
EL 565.00

Depth (ft)	Strata (1)	CLASSIFICATION OF MATERIALS (Description)	Run (Dip deg.)	Core Rec. % (RQD %)	Drill Rate minutes/ft	Blows/6" (N Value)	Moisture Content %	Gravel %	Sand %	Fines %	LL %	PI %
		Asphalt, 0.0 ft – 0.5 ft, Advanced rollerbit through asphalt 0.5 ft – 4.0 ft, and frost layer.										
5		A-1-a, f.c. SAND, little silt,little f. gravel, medium compact, brown, Moist, Rec. = 0.7 ft, (FILL)				15-10-8-7 (18)	10.4	21.4	63.9	14.7		
		A-1-a, f.c. SAND, little f. gravel, trace silt, trace organics, compact, brown, Moist, Rec. = 0.9 ft, (FILL) Turns gray at 6.8'				7-10-22-16 (32)						
		A-1-a, Rec. = 0.4 ft, (FILL) Becomes medium compact				9-9-7-3 (16)						
10		A-6, Silty CLAY, trace f.c. gravel, very stiff, gray, Wet				3-2-3-3 (5)	41.4		0.8	99.2	37	15
		A-6, Rec. = 1.7 ft, Becomes medium stiff										
		A-4										
15		A-4, Clayey SILT, little f. sand, very stiff, gray, Wet, Rec. = 0.6 ft				14-15-5-3 (20)						
20		A-4, Rec. = 0.6 ft, Becomes stiff				6-6-3-5 (9)						
25		A-4, Clayey SILT, Some f. Sand, little f.c. gravel, very stiff, gray, Moist, Rec. = 0.5 ft				5-7-10-5 (17)						
30		A-4, Rec. = 0.0 ft, No recovery, coarse gravel blocked shoe of spoon.				17-10-7-5 (17)						
35		A-4, Rec. = 0.0 ft, Spoon bouncing at 34 feet. Casing refusal at 34 feet.				50/0" (R)	Top of Bedrock @ 34.0 ft					
		34.0 ft – 35.0 ft, Rollerbit to 35 feet to start core.	R-1	89 (56)	13							
		35.0 ft – 39.5 ft, Gray, Phyllite, Very close fracture spacing. Moderately soft to moderately hard, Moderately weathered, NXDC, Fair RQD. Highly fractured/severely weathered zone at bottom 1' of recovered sample.										
40		39.5 ft – 44.5 ft, Gray, Phyllite, Medium close fracture spacing. Moderately hard, Slightly weathered, NXDC, Good RQD	R-2	85 (85)	8							
45		Hole stopped @ 44.5 ft										

Remarks:
Project performed under CHA project No. 25045.

Notes:
1. Stratification lines represent approximate boundary between material types. Transition may be gradual.
2. N Values have not been corrected for hammer energy. CE is the hammer energy correction factor.
3. Water level readings have been made at times and under conditions stated. Fluctuations of groundwater may occur due to other factors than those present at the time measurements were made.

BORING LOG 25045_BRF0281_LOGS.GPJ VERMONT AOT.GDT 5/6/13

STATE OF VERMONT
AGENCY OF TRANSPORTATION
MATERIALS & RESEARCH SECTION
SUBSURFACE INFORMATION

BORING LOG

FAIRFIELD
BRF 0281(25)
South Road, Fairfield, VT

Boring No.: B-1
Page No.: 1 of 1
Pin No.: 12J156
Checked By: J. MacGregor

Boring Crew: P. Schofield, K. Owens
Date Started: 2/11/13 Date Finished: 2/13/13
VTSPG NAD83: N 827128.08 ft E 1521459.04 ft
Station: 17+13.0 Offset: 4.0L
Ground Elevation: 600.0 ft

	Casing	Sampler
Type:	WB	SS
I.D.:	4 in	1.38 in
Hammer Wt:	300 lb.	140 lb.
Hammer Fall:	30 in.	30 in.
Hammer/Rod Type:	Manual/NW	
Rig:	TRUCK D50	CE = 1.0

Groundwater Observations		
Date	Depth (ft)	Notes
02/11/13	11.0	

ABUT. 2 BTM.
EL 597.15

EST. PILE TIP
EL 562.00

Depth (ft)	Strata (1)	CLASSIFICATION OF MATERIALS (Description)	Run (Dip deg.)	Core Rec. % (RQD %)	Drill Rate minutes/ft	Blows/6" (N Value)	Moisture Content %	Gravel %	Sand %	Fines %	LL %	PI %
		Asphalt, 0.0 ft – 0.5 ft, Advanced rollerbit through asphalt.				70/3" (R)						
		A-2-4, f.c. SAND, Some Silt, trace f. gravel, very compact, brown, Moist, Rec. = 0.1 ft, (FILL) Sample advanced within frost zone.				70-50/3" (R)						
5		A-2-4, Similar Soil, Rec. = 0.6 ft, (FILL) Becomes brown, moist to wet.				12-8-6-10 (14)						
		A-4, f.c. SAND, AND SILT, little f. gravel, medium compact, brown, Moist, Rec. = 0.5 ft, (FILL)				13-16-19-14 (35)						
10		A-1-b, f.c. GRAVEL, little silt, little f.c. sand, compact, brn-orange, Moist, Rec. = 0.7 ft, (FILL)				2-2-2-2 (4)						
		A-4										
		A-4, Rec. = 0.0 ft, No recovery				3-2-3-3 (5)	18.4	0.7	15.2	84.1	19	3
		A-4, Clayey SILT, little f.c. sand, trace f. gravel, medium stiff, gray, Wet, Rec. = 2.0 ft										
15		A-4, Similar Soil, Rec. = 2.0 ft				2-3-4-5 (7)						
		A-2-4										
20		A-2-4, f.c. GRAVEL, Some clayey Silt, Some f.c. Sand, medium compact, gray, Wet, Rec. = 1.0 ft				8-11-16-8 (27)						
		A-2-4										
25		A-2-4, f.c. SAND, little silt, little f.c. gravel, very compact, gray, Moist, Rec. = 0.2 ft, (TILL)				58/6" (R)						
		A-4										
30		A-4, Clayey SILT,trace f.c. sand,trace f. gravel, hard, gray, Moist, Rec. = 0.2 ft, (TILL)				85/2" (R)						
35		A-4, Similar Soil, Rec. = 0.3 ft, (TILL)				100/6" (R)						
		A-4, Rec. = 0.0 ft, No recovery, spoon bouncing.	R-1	100 (95)	15	50/0" (R)	Top of Bedrock @ 38.0 ft					
40		38.0 ft – 42.0 ft, Dark gray, Phyllite, Medium close fracture spacing. Moderately soft to moderately hard, Moderately weathered, NXDC, Excellent RQD										
		42.0 ft – 44.0 ft, Dark gray, Phyllite, Very close fracture spacing. Moderately soft to moderately hard, Moderately to severely weathered, NXDC, Very poor RQD	R-2	100 (15)	11							
45		44.0 ft – 47.0 ft, Gray, Phyllite, Close fracture spacing. Moderately soft to moderately hard, Slightly to moderately weathered, NXDC, Very poor RQD	R-3	100 (77)	8							
		Hole stopped @ 47.0 ft										

Remarks: Project performed under CHA project No. 25045.

Notes:
1. Stratification lines represent approximate boundary between material types. Transition may be gradual.
2. N Values have not been corrected for hammer energy. CE is the hammer energy correction factor.
3. Water level readings have been made at times and under conditions stated. Fluctuations of groundwater may occur due to other factors than those present at the time measurements were made.

BORING LOG 25045_BRF0281_LOGS.GPJ VERMONT AOT.GDT 5/6/13

PROJECT NAME: FAIRFIELD
PROJECT NUMBER: BRF 0281(25)

FILE NAME: 12J156boring.dgn
PROJECT LEADER: R. YOUNG
DESIGNED BY: R. KLINEFELTER
BORING LOGS

PLOT DATE: 18-AUG-2014
DRAWN BY: K. FRIEDLAND
CHECKED BY: J. SALVATORI
SHEET 21 OF 69

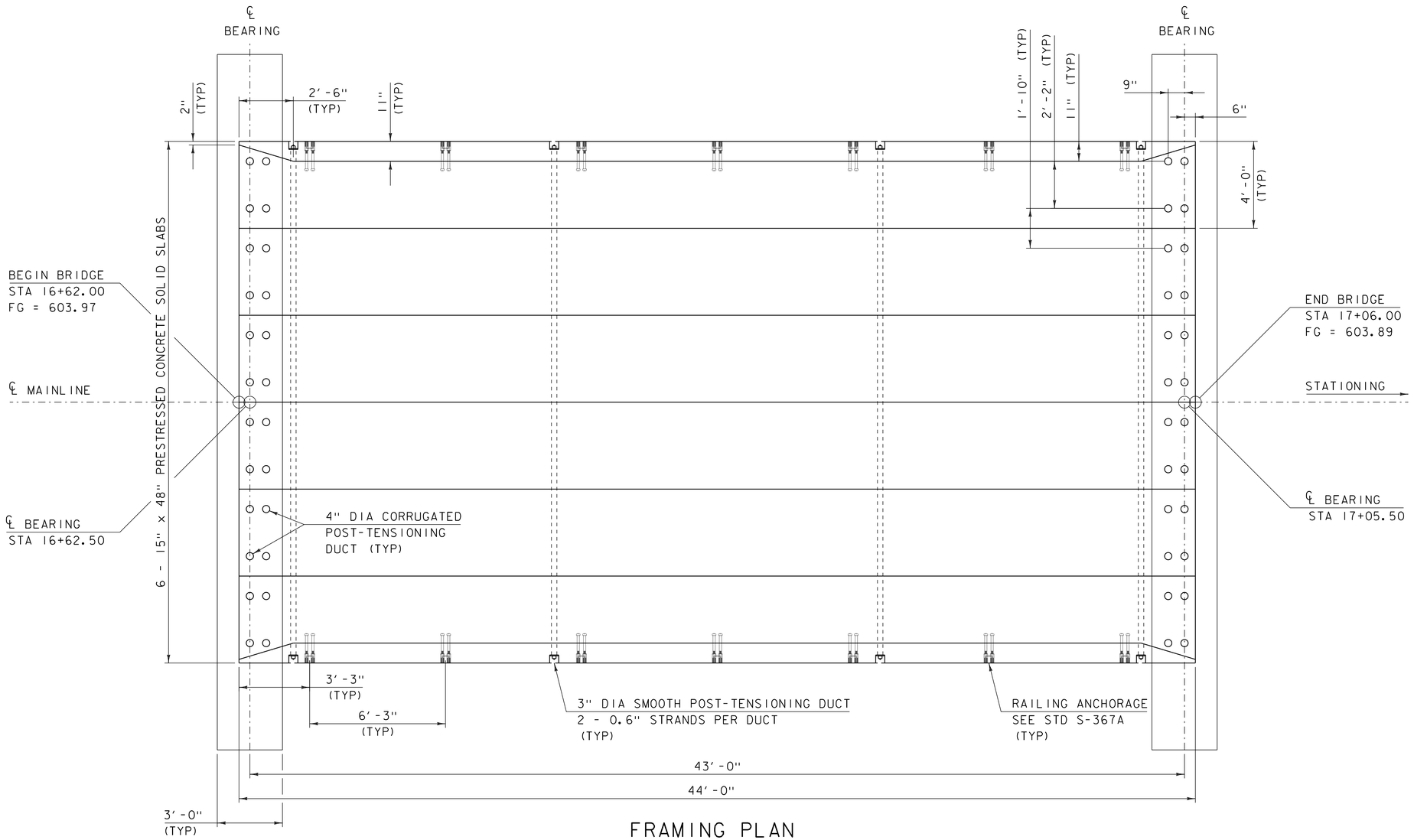

FRAMING PLAN

SCALE 3/8" = 1'-0"

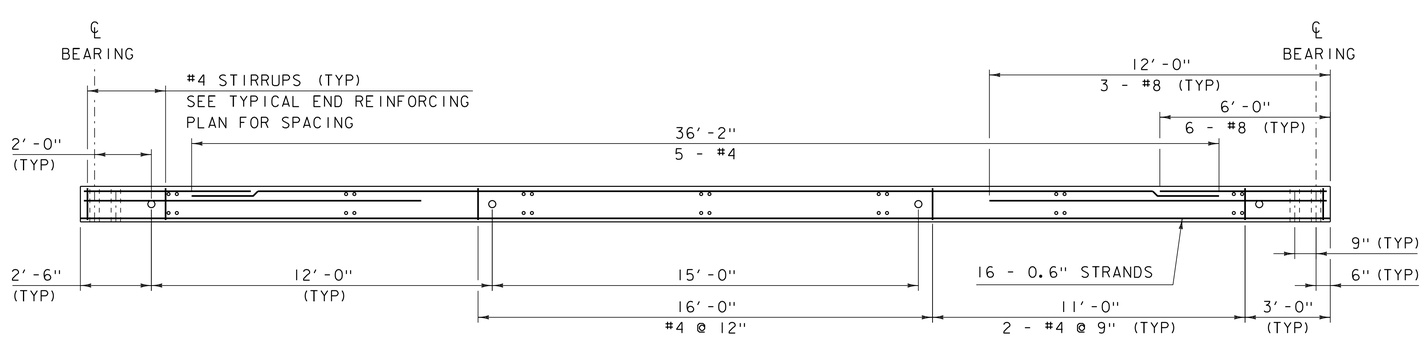

SLAB ELEVATION

SCALE 3/8" = 1'-0"

NOTES:

1) ALL REINFORCING SHALL BE LEVEL 2 OR HIGHER.

PROJECT NAME: FAIRFIELD	
PROJECT NUMBER: BRF 028I(25)	
FILE NAME: s12j156sup.dgn	PLOT DATE: 18-AUG-2014
PROJECT LEADER: R. YOUNG	DRAWN BY: K. FRIEDLAND
DESIGNED BY: T. FILLBACH	CHECKED BY: R. KLINEFELTER
FRAMING PLAN	SHEET 22 OF 69

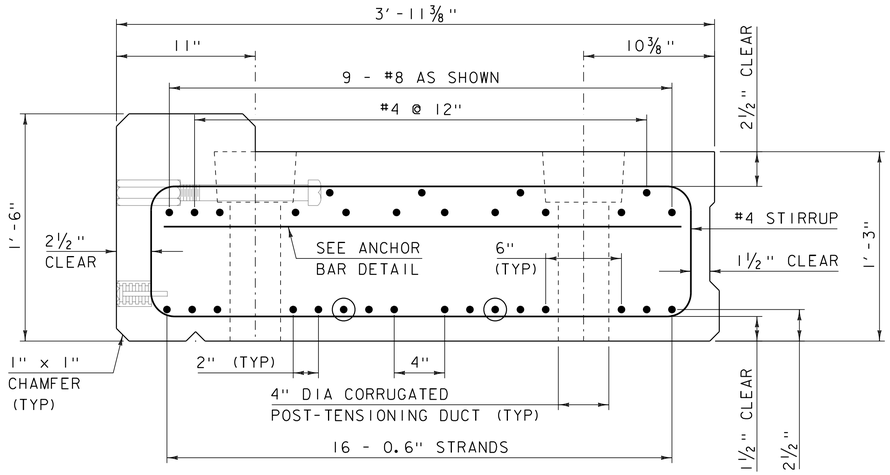

TYPICAL EXTERIOR SECTION

SCALE 2" = 1'-0"

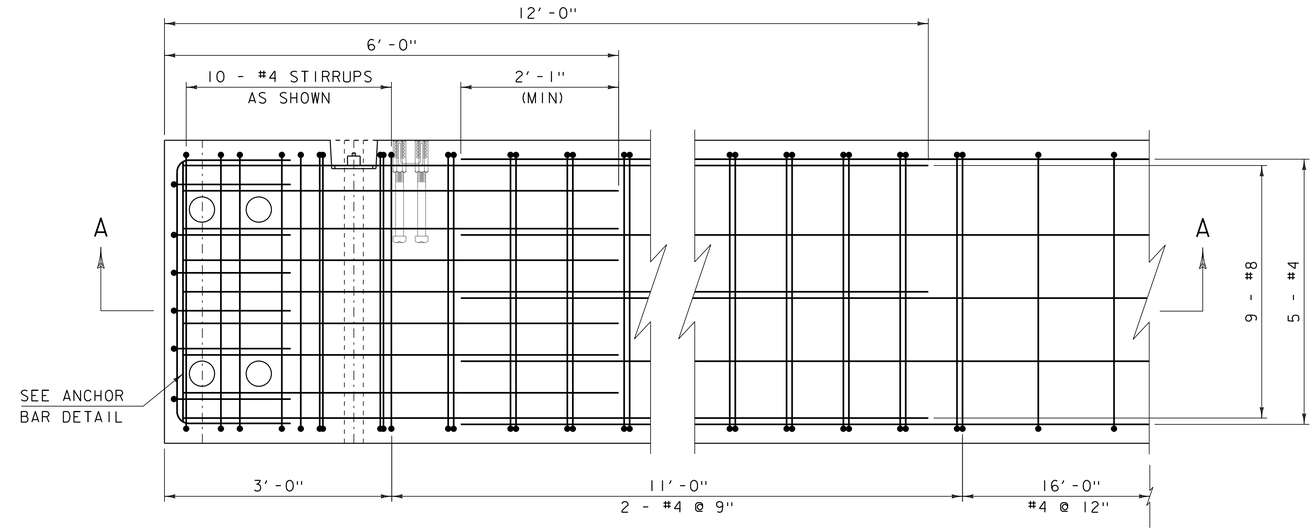

TYPICAL END REINFORCING PLAN

SCALE 1" = 1'-0"

NOTES:

1) EXTERIOR SLAB SHOWN, INTERIOR SLAB SIMILAR.

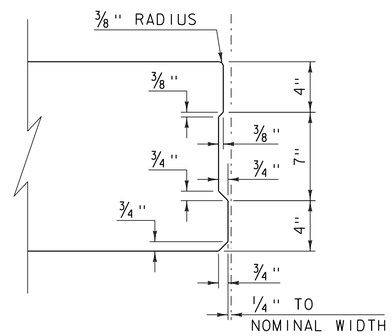

SHEAR KEY DETAIL

SCALE 2" = 1'-0"

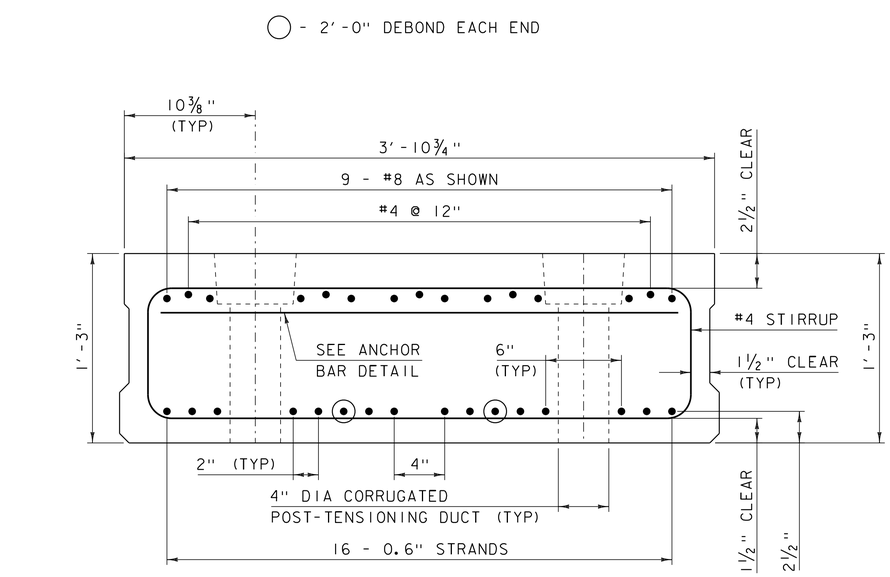

TYPICAL INTERIOR SECTION

SCALE 2" = 1'-0"

NOTES:

1) ALL REINFORCING SHALL BE LEVEL 2 OR HIGHER.

2) ANCHOR BAR SHALL BE ASTM A36 AND SHALL BE GALVANIZED IN ACCORDANCE WITH AASHTO M 111M/M 111.

3) DAMAGED GALVANIZING OR REINFORCEMENT COATING ON THE ANCHOR BAR ASSEMBLY SHALL BE REPAIRED BY AN APPROVED METHOD.

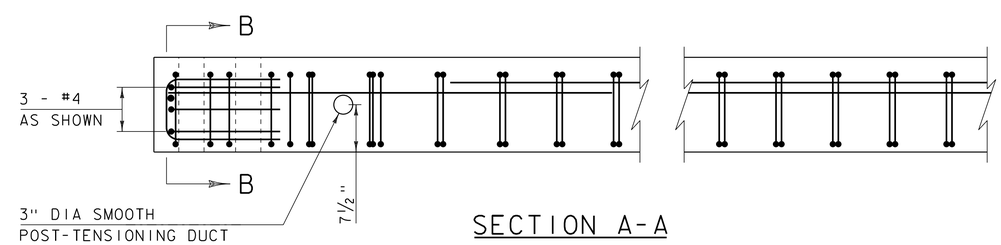

SECTION A-A

SCALE 1" = 1'-0"

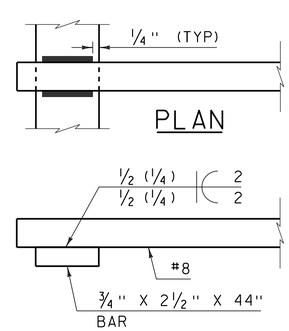

ELEVATION
ANCHOR BAR DETAILS
OPTION "A"

NOT TO SCALE

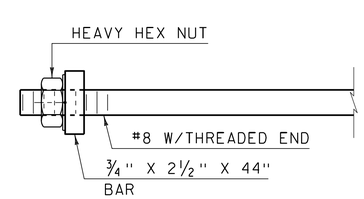

ANCHOR BAR DETAILS
OPTION "B"

NOT TO SCALE

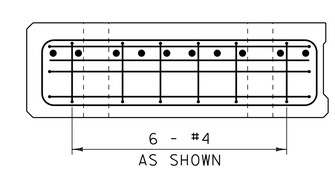

SECTION B-B

SCALE 1" = 1'-0"

PROJECT NAME: FAIRFIELD	
PROJECT NUMBER: BRF 028I(25)	
FILE NAME: s12j156sup.dgn	PLOT DATE: 18-AUG-2014
PROJECT LEADER: R. YOUNG	DRAWN BY: K. FRIEDLAND
DESIGNED BY: T. FILLBACH	CHECKED BY: R. KLINEFELTER
SUPERSTRUCTURE DETAILS 1	SHEET 23 OF 69

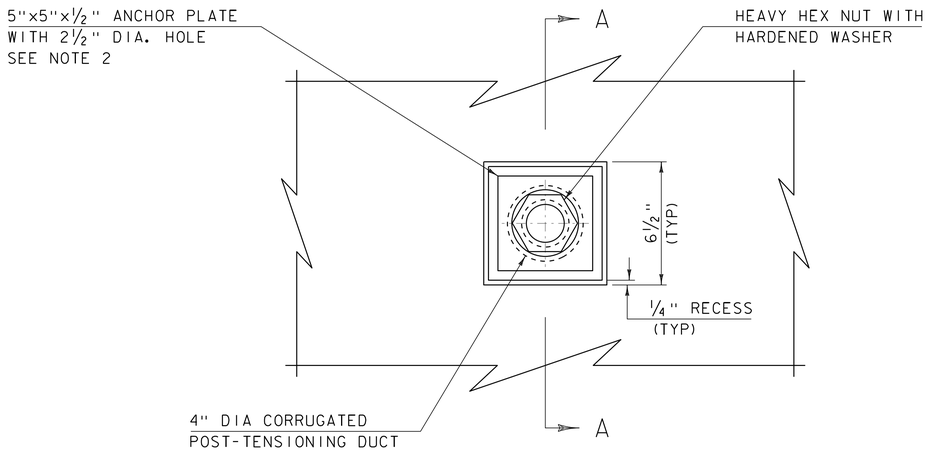

ANCHOR BOLT DETAIL
PLAN

SCALE 3" = 1'-0"

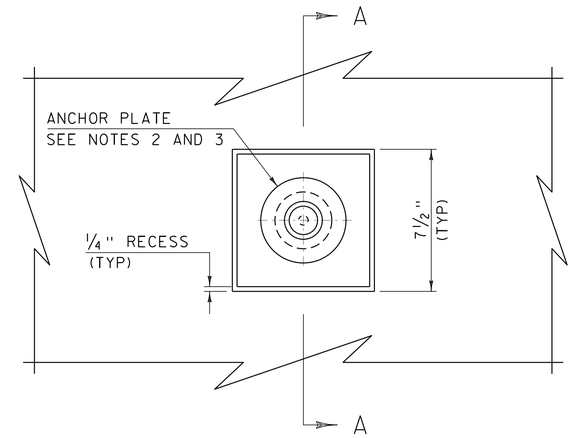

TRANSVERSE POST-TENSIONING DETAIL
ELEVATION

SCALE 3" = 1'-0"

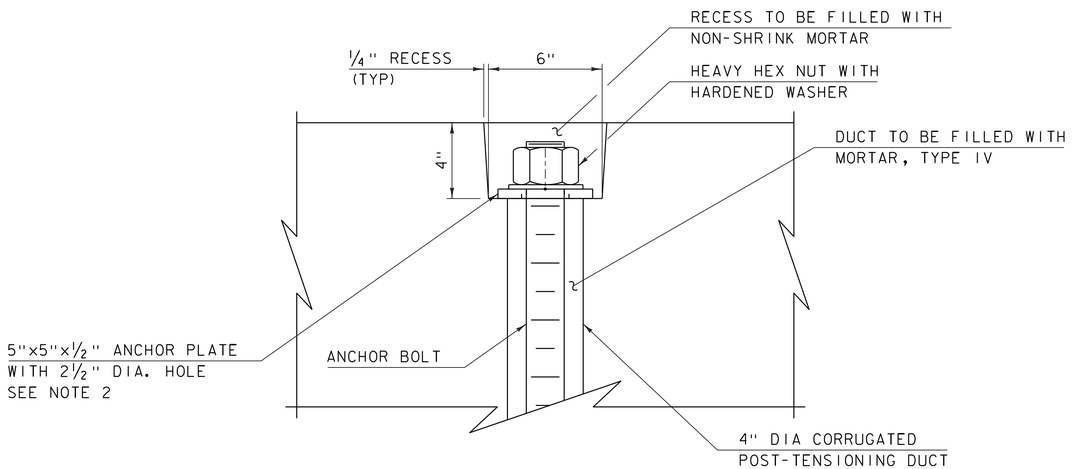

ANCHOR BOLT DETAIL
SECTION A-A

SCALE 3" = 1'-0"

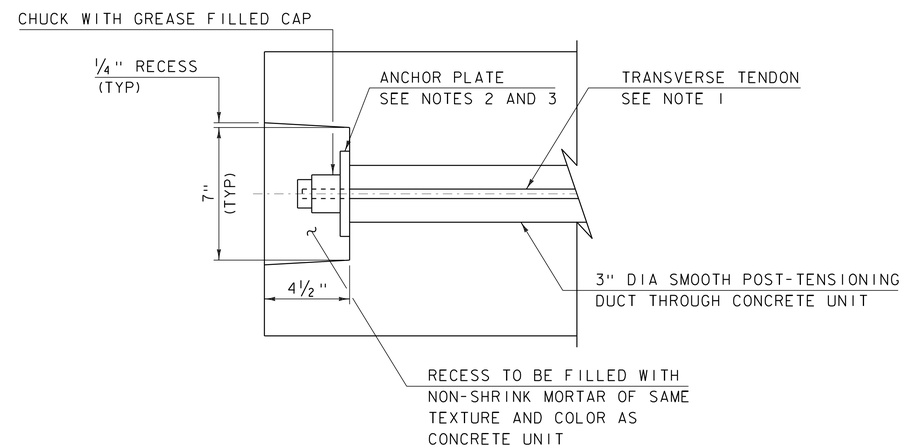

TRANSVERSE POST-TENSIONING DETAIL
SECTION A-A

SCALE 3" = 1'-0"

NOTES:

1) TRANSVERSE TENDONS SHALL BE COVERED BY SEAMLESS POLYPROPYLENE SHEATH (WITH CORROSION INHIBITER GREASE BETWEEN SHEATH AND STRAND) FOR THE LENGTH OF STRAND, EXCEPT AT ANCHORAGE LOCATIONS. EACH STRAND SHALL BE TENSIONED TO 33 KIPS FOR 0.5" DIA STRAND AND TO 47 KIPS FOR 0.6" DIA STRAND.

2) ANCHOR PLATES SHALL CONFORM TO AASHTO M 270M/M 270, GRADE 345 (GRADE 50) AND BE GALVANIZED IN ACCORDANCE WITH AASHTO M 111M/M 111.

3) ANCHOR PLATES FOR TRANSVERSE POST-TENSIONING ARE TO BE DESIGNED BY THE FABRICATOR FOR THE SPECIFIC POST-TENSIONING SYSTEM USED. DETAILS FOR THE ANCHOR PLATE SHALL BE PROVIDED ON THE FABRICATION DRAWINGS.

PROJECT NAME: FAIRFIELD	
PROJECT NUMBER: BRF 028I(25)	
FILE NAME: s12j156sup.dgn	PLOT DATE: 18-AUG-2014
PROJECT LEADER: R. YOUNG	DRAWN BY: K. FRIEDLAND
DESIGNED BY: T. FILLBACH	CHECKED BY: R. KLINEFELTER
SUPERSTRUCTURE DETAILS 2	SHEET 24 OF 69

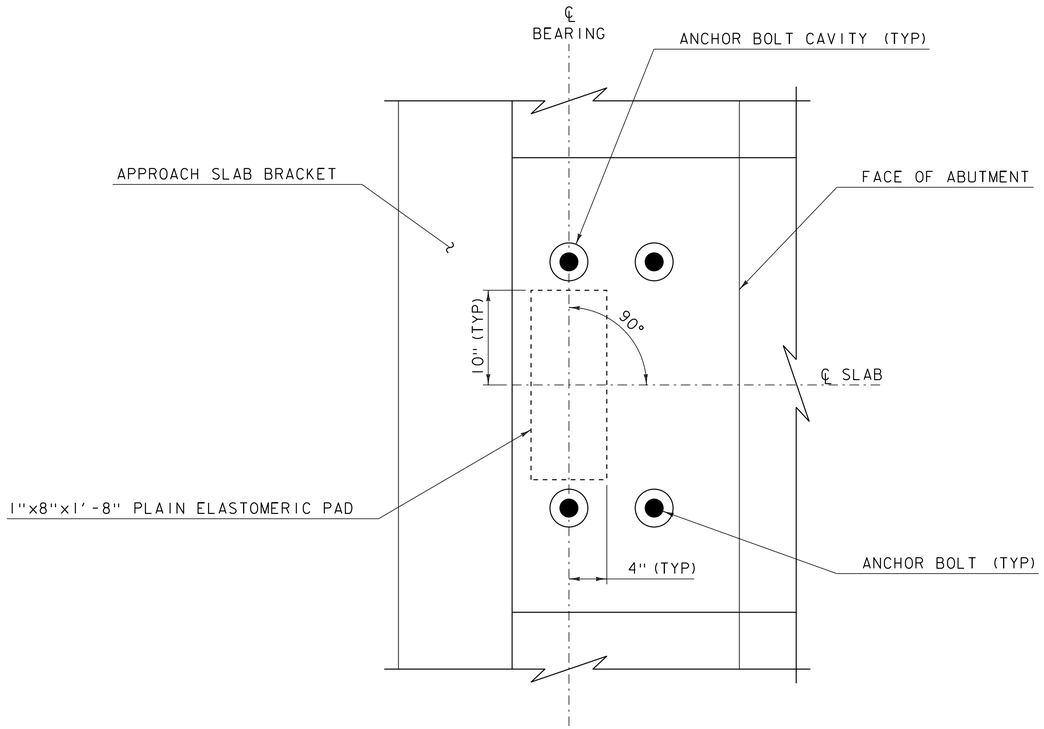

BEARING LAYOUT

SCALE 1½" = 1'-0"

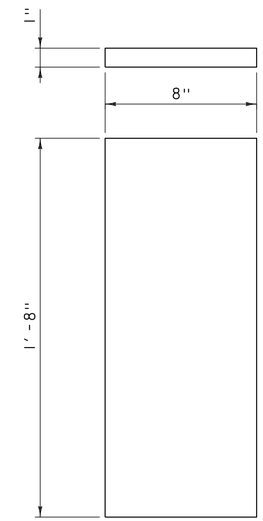

BEARING DETAIL

SCALE 3" = 1'-0"

BEARING NOTES:

1. BEARINGS SHALL CONFORM TO THE APPLICABLE SUBSECTIONS OF SECTIONS 531 AND 731.

2. THE ELASTOMER WAS DESIGNED WITH A SHEAR MODULUS OF 110 PSI +/- 15%.

3. THE CONTRACTOR IS ADVISED TO HAVE A MINIMUM OF 12 - ¼"x8"x1'-8" GALVANIZED STEEL SHIMS AVAILABLE FOR USE FOR ELEVATION ADJUSTMENTS UPON THE SETTING OF THE SUPERSTRUCTURE UNITS. THE SHIMS SHALL BE FABRICATED ACCORDING TO SECTION 531 AND SHALL BE INCLUDED UNDER ITEM 531.16,"BEARING DEVICE ASSEMBLY, PLAIN ELASTOMERIC PAD".

PROJECT NAME: FAIRFIELD	
PROJECT NUMBER: BRF 0281(25)	
FILE NAME: s12j156sup.dgn	PLOT DATE: 18-AUG-2014
PROJECT LEADER: R. YOUNG	DRAWN BY: R. KLINEFELTER
DESIGNED BY: R. KLINEFELTER	CHECKED BY: J. SALVATORI
BEARING DETAILS	SHEET 25 OF 69

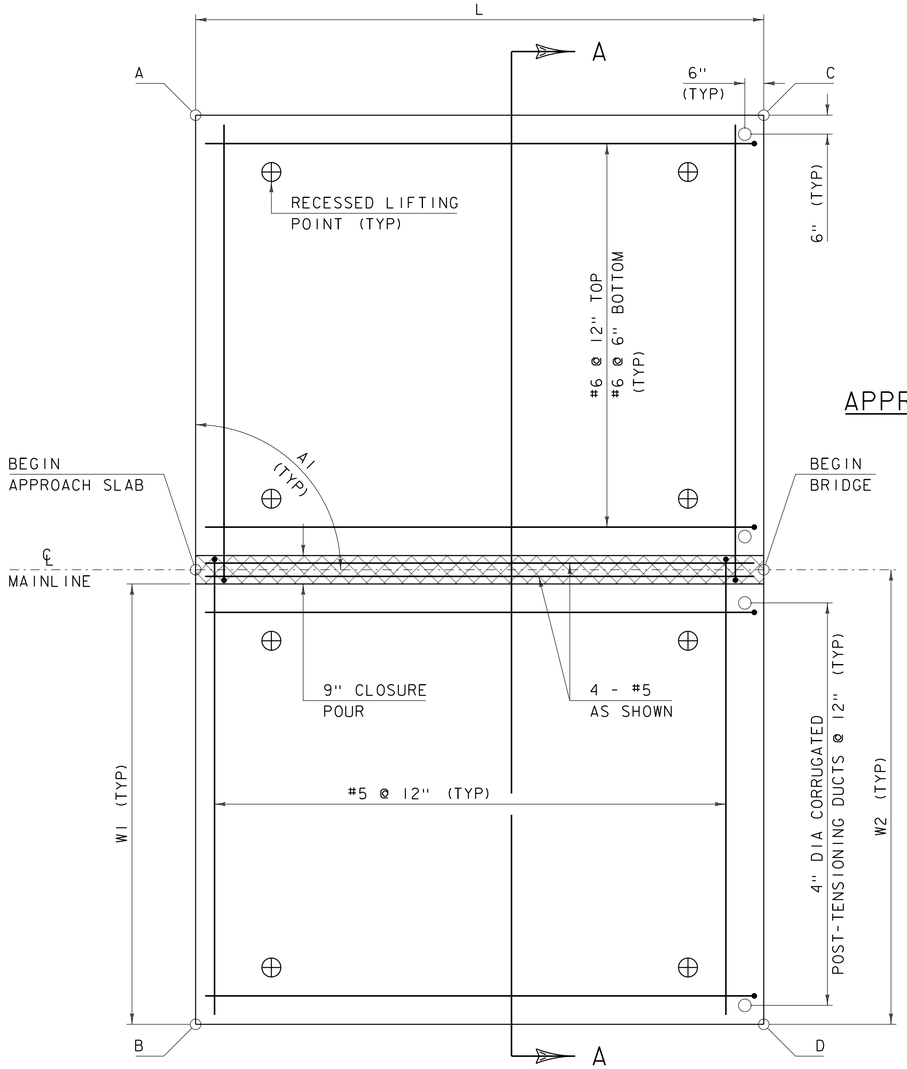

APPROACH SLAB #1 PLAN VIEW

SCALE ½" = 1'-0"

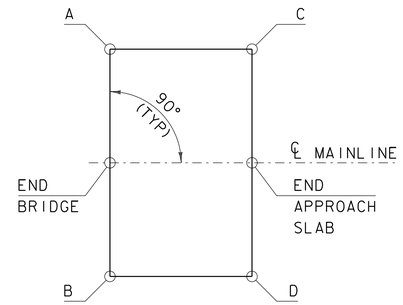

APPROACH SLAB #2 PLAN VIEW

NOT TO SCALE

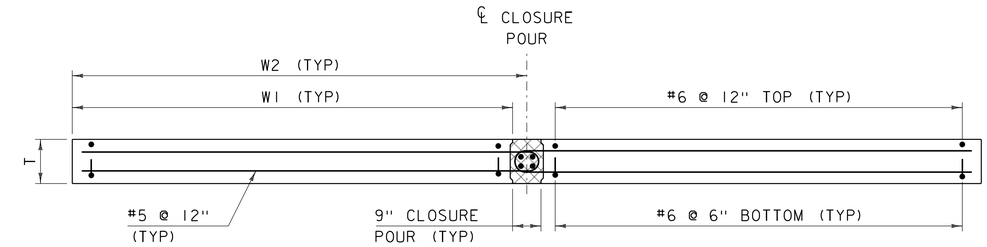

SECTION A-A

SCALE ½" = 1'-0"

T	1'-3"
L	15'-0"
W1	11'-7½"
W2	12'-0"
A1	90°

APPROACH SLAB DIMENSIONS

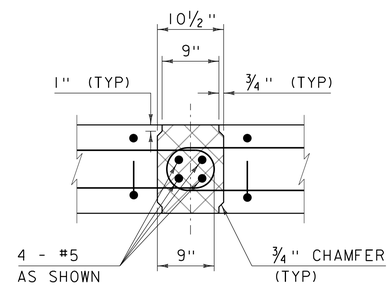

CONNECTION DETAIL SECTION

SCALE 1" = 1'-0"

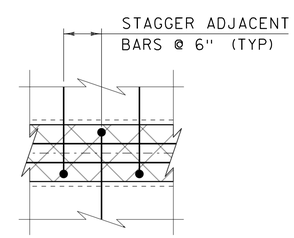

CONNECTION DETAIL PLAN

SCALE 1" = 1'-0"

APPROACH SLAB #1			
	STATION	OFFSET	ELEVATION
1A	16+47.00	-12.00	603.45
BEGIN AS #1	16+47.00	℄	603.69
1B	16+47.00	12.00	603.45
1C	16+62.00	-12.00	603.48
END AS #1	16+62.00	℄	603.72
1D	16+62.00	12.00	603.48

APPROACH SLAB #2			
	STATION	OFFSET	ELEVATION
2A	17+06.00	-12.00	603.40
BEGIN AS #2	17+06.00	℄	603.64
2B	17+06.00	12.00	603.40
2C	17+21.00	-12.00	603.31
END AS #2	17+21.00	℄	603.55
2D	17+21.00	12.00	603.31

APPROACH SLAB ELEVATIONS

ALL ELEVATIONS ARE TOP OF SLAB

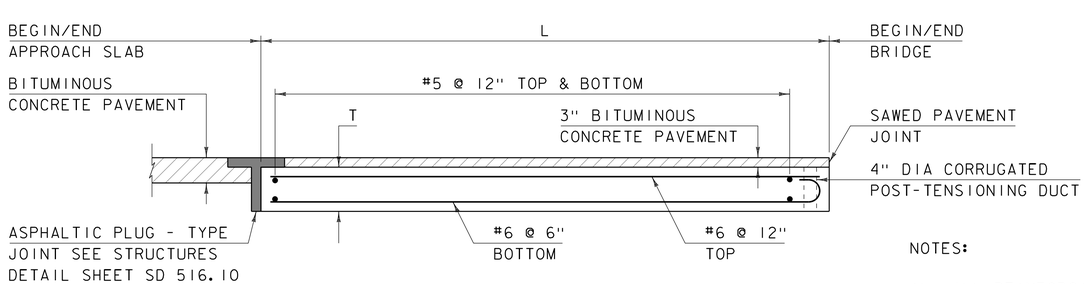

APPROACH SLAB ELEVATION VIEW

SCALE ½" = 1'-0"

NOTES:

1) ALL REINFORCING SHALL BE LEVEL 2 OR HIGHER.

2) LIFTING POINTS SHALL BE DESIGNED BY FABRICATOR AND SUBMITTED WITH CALCULATIONS.

NOTE:

NF = NEAR FACE
FF = FAR FACE
EF = EACH FACE
▲ = CUT TO FIT IN FIELD
3" CLEAR, UNLESS OTHERWISE SPECIFIED ON THE PLANS.
SPLICES NOT DETAILED SHALL BE DESIGNED

PROJECT NAME: FAIRFIELD
PROJECT NUMBER: BRF 028I(25)

FILE NAME: s12j156apslab.dgn
PROJECT LEADER: R. YOUNG
DESIGNED BY: R. KLINEFELTER
APPROACH SLAB DETAILS

PLOT DATE: 10-SEP-2014
DRAWN BY: K. FRIEDLAND
CHECKED BY: J. SALVATORI
SHEET 26 OF 69

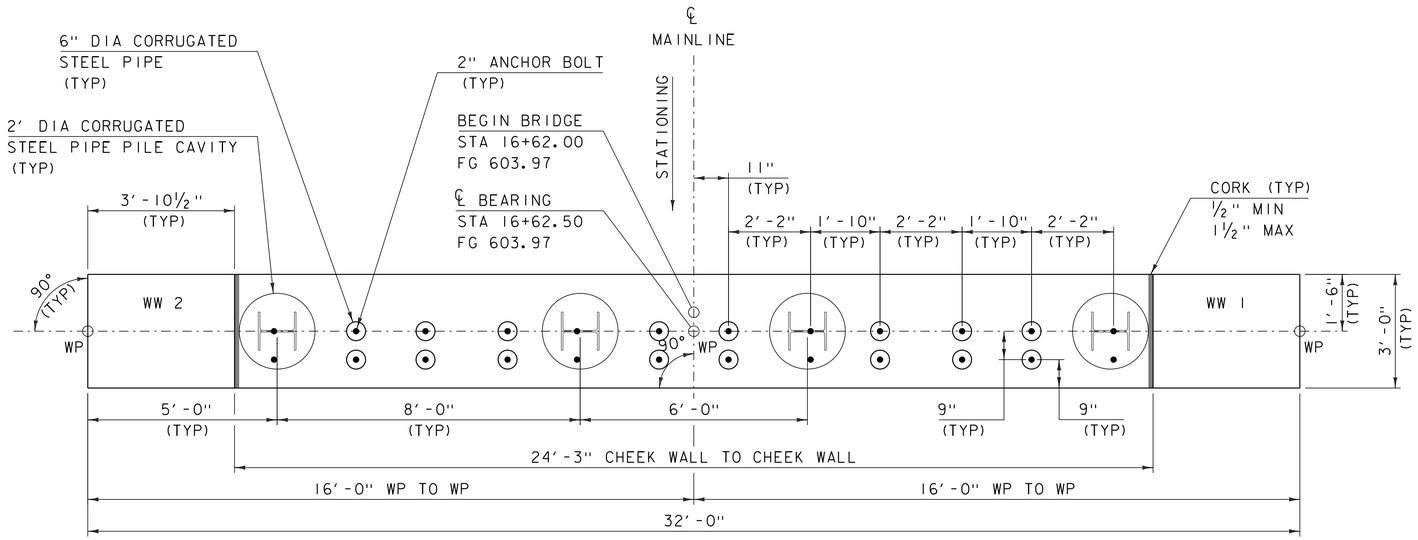

ABUTMENT PLAN (PCU)

SCALE ½" = 1'-0"

PCU 1 ELEVATIONS

ELEV "A"	603.98
ELEV "B"	602.15
ELEV "C"	597.23
ELEV "D"	602.39
ELEV "E"	603.98
ELEV "F"	602.15

PCU 2 ELEVATIONS

ELEV "A"	603.90
ELEV "B"	602.07
ELEV "C"	597.15
ELEV "D"	602.31
ELEV "E"	603.90
ELEV "F"	602.07

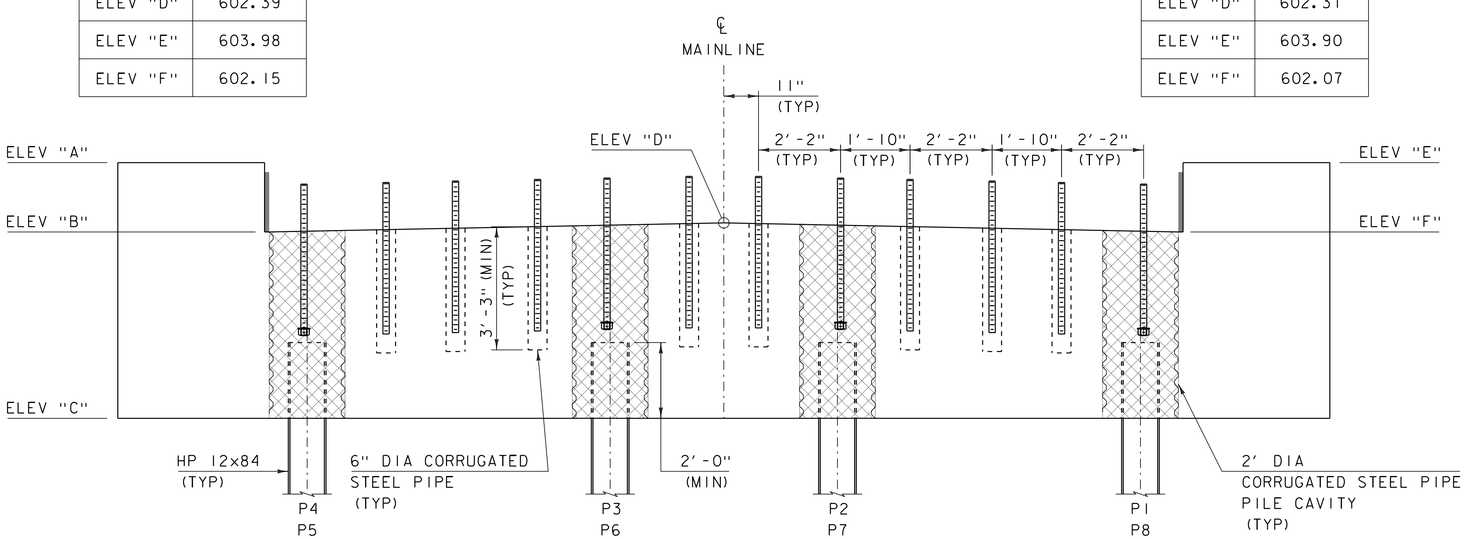

ABUTMENT ELEVATION (PCU)

SCALE ½" = 1'-0"

NOTES:

1) ANCHOR BOLTS SHALL BE ASTM F1554 GRADE 105.

2) ANCHOR BOLTS, NUTS, AND WASHERS SHALL BE GALVANIZED.

3) 6" DIA CORRUGATED STEEL PIPES FOR ANCHOR BOLTS SHALL BE PRECAST INTO THE PILE CAPS. DRILLING AND GROUTING ANCHOR BOLTS WILL NOT BE PERMITTED.

4) ANCHOR BOLTS, NUTS, WASHERS, AND ANCHOR PLATES SHALL BE PAID FOR UNDER ITEM 506.60, STRUCTURAL STEEL (FPQ).

5) GROUT IN 6" DIA CORRUGATED STEEL PIPES FOR ANCHOR BOLTS SHALL HAVE A MINIMUM COMPRESSIVE STRENGTH OF 10 KSI AT 28 DAYS.

6) ANCHOR BOLTS LOCATED IN PILE CAVATIES SHALL HAVE A HEAVY HEX NUT AND HARDENED WASHER ON THE BOTTOM END OF EACH ANCHOR BOLT AND SHALL BE SECURED IN THE FINAL POSITION BEFORE THE PILE CAVITY CONCRETE IS PLACED.

7) A TEMPLATE SHALL BE USED TO LAYOUT ANCHOR BOLT DUCTS IN THE SOLID SLABS. THE SAME TEMPLATE SHALL BE USED TO LAYOUT ANCHOR BOLT DUCTS AND ANCHOR BOLTS IN THE ABUTMENTS.

8) PCU 1 SHOWN, PCU 2 SIMILAR.

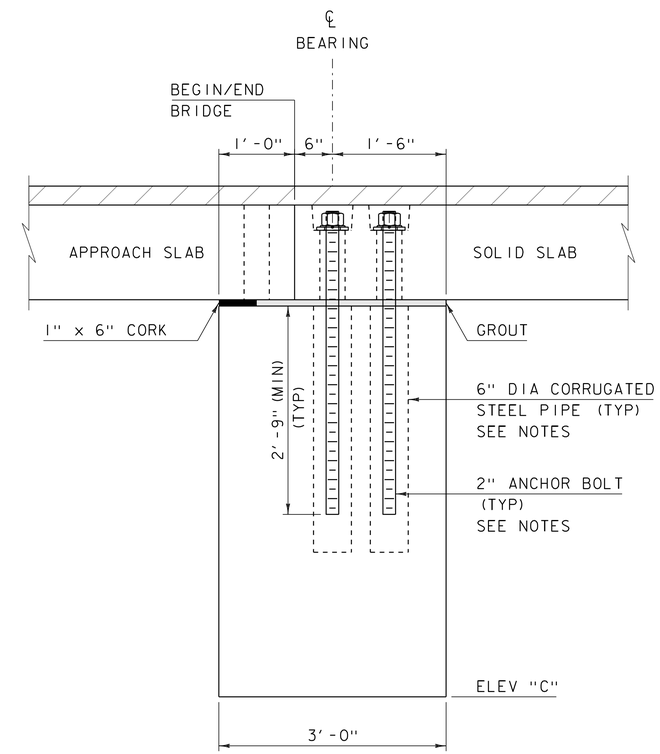

ABUTMENT TYPICAL (PCU)

SCALE 1" = 1'-0"

PROJECT NAME:	FAIRFIELD
PROJECT NUMBER:	BRF 0281(25)

FILE NAME: s12j156sub.dgn	PLOT DATE: 11-SEP-2014
PROJECT LEADER: R. YOUNG	DRAWN BY: K. FRIEDLAND
DESIGNED BY: T. FILLBACH	CHECKED BY: R. KLINEFELTER
ABUTMENT PLAN	SHEET 27 OF 69

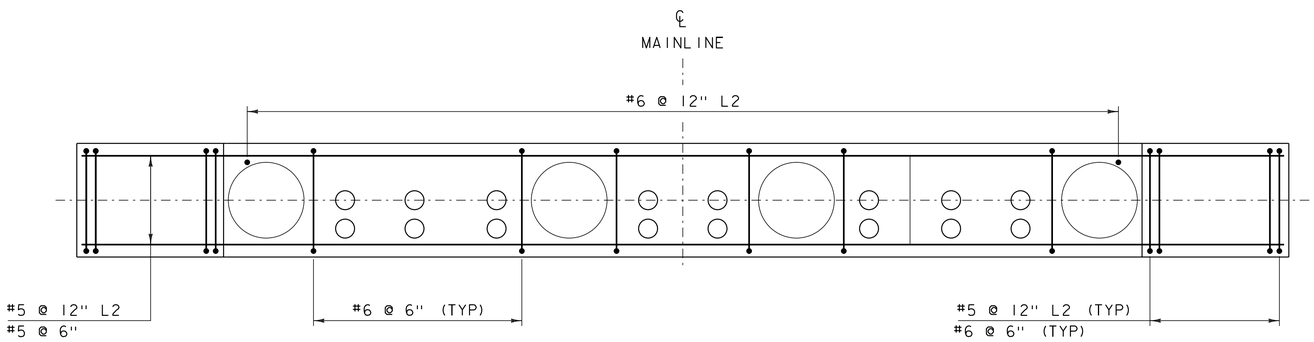

ABUTMENT REINFORCING PLAN (PCU)

SCALE ½" = 1'-0"

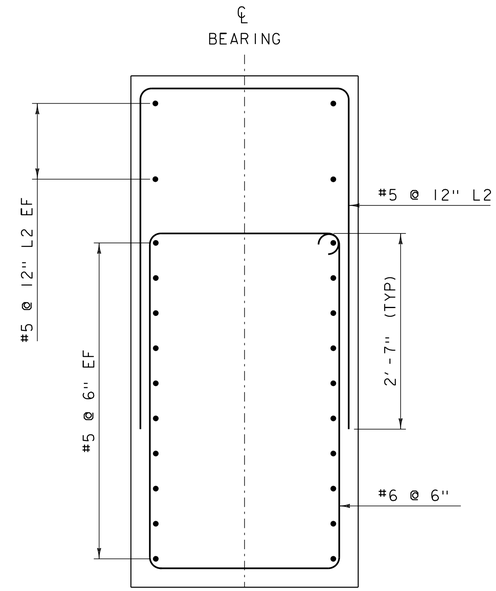

SECTION B-B

SCALE 1" = 1'-0"

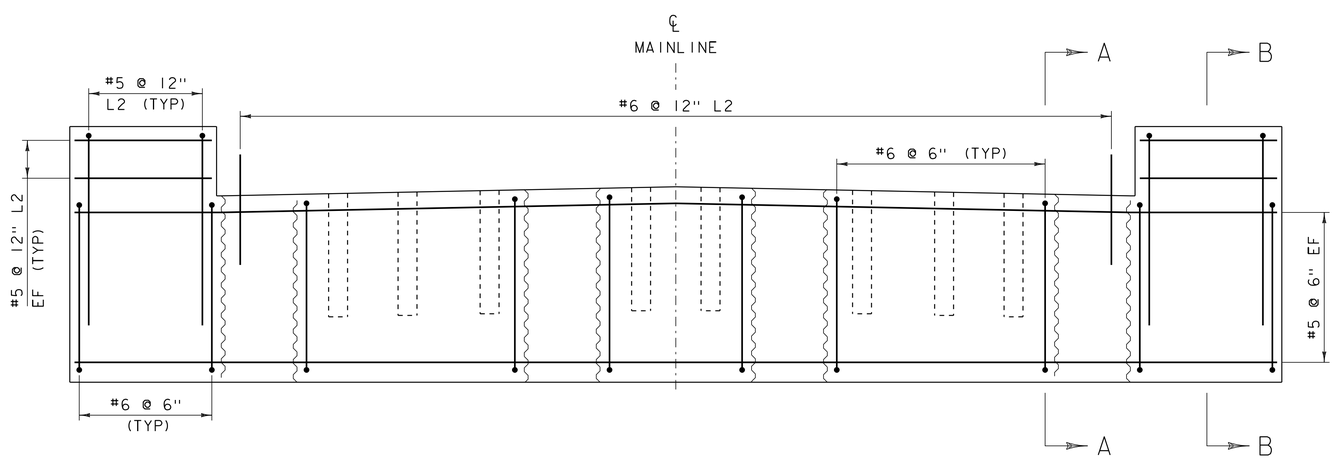

ABUTMENT REINFORCING ELEVATION (PCU)

SCALE ½" = 1'-0"

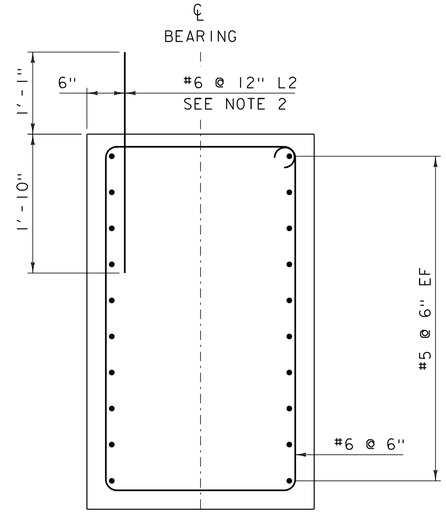

SECTION A-A

SCALE 1" = 1'-0"

NOTES:

1) PCU 1 SHOWN, PCU 2 SIMILAR.

2) A TEMPLATE SHALL BE USED TO LAYOUT DOWEL DUCTS IN THE APPROACH SLABS. THE SAME TEMPLATE SHALL BE USED TO LAYOUT THE #6 @ 12" L2 APPROACH SLAB DOWELS IN THE ABUTMENTS.

NOTE:

L2 = LEVEL II REINFORCING
NF = NEAR FACE
FF = FAR FACE
EF = EACH FACE
▲ = CUT TO FIT IN FIELD
3" CLEAR, UNLESS OTHERWISE SPECIFIED ON THE PLANS.
SPLICES NOT DETAILED SHALL BE DESIGNED

PROJECT NAME: FAIRFIELD	
PROJECT NUMBER: BRF 028I(25)	
FILE NAME: s12jl56sub.dgn	PLOT DATE: 18-AUG-2014
PROJECT LEADER: R. YOUNG	DRAWN BY: K. FRIEDLAND
DESIGNED BY: T. FILLBACH	CHECKED BY: R. KLINEFELTER
ABUTMENT REINFORCING	SHEET 28 OF 69

EPSC PLAN NARRATIVE

1.1 PROJECT DESCRIPTION

THIS PROJECT INVOLVES THE REMOVAL OF BRIDGE 14 IN ITS ENTIRETY. BRIDGE 14 WILL BE REPLACED WITH A NEW STRUCTURE, SPANNING 44 FEET OVER THE FAIRFIELD RIVER, ON NEW ABUTMENTS ALONG THE EXISTING ALIGNMENT. BRIDGE 14 IS LOCATED IN THE TOWN OF FAIRFIELD, ON TOWN HIGHWAY 1, APPROXIMATELY 2.5 MILES SOUTH OF THE INTERSECTION OF VT 36.

NOTE: AREA OF DISTURBANCE INCLUDES LIMITS OF EARTH DISTURBANCE WITHIN THE PROJECT AREA, AS WELL AS WASTE, BORROW AND STAGING AREAS, AND OTHER EARTH DISTURBING ACTIVITIES WITHIN OR DIRECTLY ADJACENT TO THE PROJECT LIMITS AS SHOWN ON THE ATTACHED EPSC PLAN.

TOTAL AREA OF DISTURBANCE AS SHOWN ON THE ATTACHED EPSC PLAN IS APPROXIMATELY 0.24 ACRES.

IT IS ANTICIPATED THAT THIS PROJECT WILL LAST ONE CONSTRUCTION SEASON.

1.2 SITE INVENTORY

1.2.1 TOPOGRAPHY

THE TOPOGRAPHY OF THE AREA IS A FLOODPLAIN AND WETLANDS BUFFERED BY FARMLAND, WITH FORESTED AREAS NEARBY. TOWN HIGHWAY 1 IS THE ONLY ROADWAY WITHIN THE PORJECT SITE. TOWN HIGHWAYS 3, 61, AND 62 ARE ALL NEARBY THE PROJECT SITE. THERE ARE NO RESIDENCES NEAR THE PROJECT.

1.2.2 DRAINAGE, WATERWAYS, BODIES OF WATER, AND PROXIMITY TO NATURAL OR MAN-MADE WATER FEATURES

THE FAIRFIELD RIVER IS THE ONLY WATER SOURCE ON THE PROJECT SITE. THE RIVER IS CLASSIFIED AS INCISED AND ALLUVIAL. THE STREAM BED CONSISTS OF SILT, SAND AND GRAVEL. THE TRIBUTARY AREA AT THE BRIDGE IS 7.9 MILES^2.

1.2.3 VEGETATION

THE VEGETATION IN THE PROJECT AREA CONSISTS OF SOFTWOOD TREES AND UNDERGROWTH AS WELL AS WHATEVER CROP HAS BEEN PLANTED. THE IMPACT TO VEGETATION WILL BE LIMITED TO THAT WHICH IS DIRECTLY AFFECTED BY REPLACEMENT OF THE EXISTING BRIDGE. UPON PROJECT COMPLETION, THE CHANNEL WILL BE ARMORED WITH STONE FILL TYPE 3 AS SPECIFIED ON THE PLANS. DISTURBED VEGETATION WILL BE REESTABLISHED WITH STANDARD SEED AND MULCH PRACTICES.

1.2.4 SOILS

ALL SOIL DATA CAME FROM THE U.S. DEPARTMENT OF AGRICULTURE SOIL CONSERVATION SERVICE FOR THE COUNTY OF FRANKLIN, VERMONT. THE SOIL ON THE PROJECT SITE IS WINOOSKI SILT LOAM, 0% TO 3% SLOPES, “K FACTOR” = 0.49. THE SOIL IS CONSIDERED NOT HIGHLY ERODIBLE. NEAR THE SOUTHERN EDGE OF THE PLAN LIMITS THE SOIL IS WINDSOR LOAMY FINE SAND, 3% TO 8% SLOPES, “K FACTOR” = 0.17. NEAR THE NORTHERN EDGE OF THE PLAN LIMITS THE SOIL IS BINGHAMVILLE SILT LOAM, 0% TO 2% SLOPES, “K FACTOR” = 0.49. BOTH OF THESE SOILS ARE CONSIDERED NOT HIGHLY ERODIBLE.

NOTE: K-VALUES GENERALLY INDICATE THE FOLLOWING:
0.0-0.23 = LOW EROSION POTENTIAL
0.24-0.36 = MODERATE EROSION POTENTIAL
0.37 AND HIGHER = HIGH EROSION POTENTIAL

1.2.5 SENSITIVE RESOURCE AREAS

CRITICAL HABITATS: NO
HISTORICAL OR ARCHEOLOGICAL AREAS: YES, ARCHAEOLOGY TO THE NORTHEAST AND SOUTHEAST OF THE PROJECT.
PRIME AGRICULTURAL LAND: NO
THREATENED AND ENDANGERED SPECIES: NO
WATER RESOURCE: FAIRFIELD RIVER.
WETLANDS: YES, TO THE NORTHEAST AND SOUTHWEST OF THE PROJECT.

1.3 RISK EVALUATION

THIS PROJECT DOES NOT FALL UNDER THE JURISDICTION OF GENERAL PERMIT 3-9020 FOR STORMWATER RUNOFF FROM CONSTRUCTION SITES. SHOULD CHANGES PRIOR TO OR DURING CONSTRUCTION RESULT IN ONE OR MORE ACRES OF EARTH DISTURBANCE OR SHOULD THE PROJECT BECOME PART OF A LARGER PLAN OF DEVELOPMENT, THE CONTRACTOR WILL BE RESPONSIBLE FOR ANY ADDITIONAL PERMITTING.

1.4 EROSION PREVENTION AND SEDIMENT CONTROL

THE EROSION CONTROL PLANS ARE MEANT AS A GUIDELINE FOR PREVENTING EROSION AND CONTROLLING SEDIMENT TRANSPORT. THE PRINCIPLES OUTLINED IN THIS NARRATIVE CONSIST OF APPLYING MEASURES THROUGHOUT CONSTRUCTION OF THE PROJECT IN ORDER TO MINIMIZE SEDIMENT TRANSPORT TO THE RECEIVING WATERS. THE MEASURES INCLUDE STABILIZATION AND STRUCTURAL PRACTICES, STORM WATER CONTROLS AND OTHER POLLUTION PREVENTION PRACTICES. THEY HAVE BEEN PROPOSED BY THE DESIGNER AS A BASIS FOR PROTECTING RESOURCES AND WILL NEED TO BE BUILT UPON BASED ON THE SPECIFIC MEANS AND METHODS OF THE CONTRACTOR. REFER TO THE LOW RISK SITE HANDBOOK AND APPROPRIATE DETAIL SHEETS FOR SPECIFIC GUIDANCE AND CONSTRUCTION DETAILING.

ALL MEASURES SHALL BE REGULARLY MAINTAINED AND SHALL BE CHECKED FOR SEDIMENT BUILD-UP. SEDIMENT SHALL BE DISPOSED OF AT AN APPROVED SITE WHERE IT WILL NOT BE SUBJECT TO EROSION.

1.4.1 MARK SITE BOUNDARIES

SITE BOUNDARIES AND AREAS CONSTRUCTION EQUIPMENT CAN ACCESS SHALL BE DELINEATED.

PROJECT DEMARCATION FENCING (PDF) SHALL BE USED TO PHYSICALLY MARK SITE BOUNDARIES, BARRIER FENCE SHALL BE USED INSTEAD OF PROJECT DEMARCATION FENCE WITHIN 100 FEET OF A WATER RESOURCE (STREAM, BROOK, LAKE, POND, WETLAND, ETC).

1.4.2 LIMIT DISTURBANCE AREA

PREVENTING INITIAL SOIL EROSION BY MINIMIZING THE EXPOSED AREA IS MUCH MORE EFFECTIVE THAN TREATING ERODED SEDIMENT. EARTH DISTURBANCE CAN BE MINIMIZED THROUGH CONSTRUCTION PHASING BY ONLY OPENING UP EARTH AS NECESSARY. THIS CAN LIMIT THE AREA THAT WILL BE DISTURBED AND EXPOSED TO EROSION. EMPLOY TEMPORARY CONSTRUCTION STABILIZATION PRACTICES IN INCREMENTAL STAGES AS PHASES CHANGE. FOR PROJECTS WHICH FALL UNDER THE CONSTRUCTION GENERAL PERMIT, ONLY THE ACREAGE LISTED ON THE PERMIT AUTHORIZATION MAY BE EXPOSED AT ANY GIVEN TIME.

MAINTAINING VEGETATED BUFFERS ALONG STREAM BANKS, WETLANDS OR OTHER SENSITIVE AREAS IS A CRUCIAL EROSION AND SEDIMENT CONTROL MEASURE THAT SHOULD BE ESTABLISHED WHEREVER POSSIBLE.

1.4.3 SITE ENTRANCE/EXIT STABILIZATION

TRACKING OF SEDIMENT ONTO PUBLIC HIGHWAYS SHALL BE MINIMIZED TO REDUCE THE POTENTIAL FOR RUNOFF ENTERING RECEIVING WATERS. INSTALLATION SHALL COINCIDE WITH THE CONTRACTORS PROGRESS SCHEDULE.

STABILIZED CONSTRUCTION ENTRANCES SHALL BE INSTALLED AS PROPOSED ON THE EPSC PLAN AND ANYWHERE EQUIPMENT WILL BE GOING FROM AREAS OF EXPOSED SOILS TO PAVED SURFACES.

1.4.4 INSTALL SEDIMENT BARRIERS

SEDIMENT BARRIERS SHALL BE UTILIZED TO INTERCEPT RUNOFF AND ALLOW SUSPENDED SEDIMENT TO SETTLE OUT. THEY SHALL BE INSTALLED PRIOR TO ANY UP SLOPE WORK.

SILT FENCE WILL BE INSTALLED AS PROPOSED ON THE EPSC PLAN. WOVEN WIRE REINFORCED SILT FENCE SHALL BE USED INSTEAD OF SILT FENCE WITHIN 100 FEET UPSLOPE OF RECEIVING WATERS.

1.4.5 DIVERT UPLAND RUNOFF

DIVERSIONARY MEASURES SHALL BE USED TO INTERCEPT RUNOFF FROM ABOVE THE CONSTRUCTION AND DIRECT IT AROUND THE DISTURBED AREA SO THAT CLEAN WATER DOES NOT BECOME MUDDIED WHILE TRAVELING OVER EXPOSED SOILS ON THE CONSTRUCTION SITE.

THE PROJECT AREA IS RELATIVELY FLAT. THERFORE IT IS NOT ANTICIPATED THAT DIVERSION MEASURES WILL BE NECESSARY.

1.4.6 SLOW DOWN CHANNELIZED RUNOFF

CHECK STRUCTURES SHALL BE UTILIZED TO REDUCE THE VELOCITY, AND THUS THE EROSIVE POTENTIAL, OF CONCENTRATED FLOW IN CHANNELS.

1.4.7 CONSTRUCT PERMANENT CONTROLS

PERMANENT STORMWATER TREATMENT DEVICES SHALL BE INSTALLED AS SHOWN ON THE PLANS AND IN ACCORDANCE WITH PERMIT CONDITIONS.

1.4.8 STABILIZE EXPOSED SOILS DURING CONSTRUCTION

ALL AREAS OF DISTURBANCE MUST HAVE TEMPORARY STABILIZATION IN PLACE WITHIN 48 HOURS OF DISTURBANCE OR IN ACCORDANCE WITH THE CONSTRUCTION GENERAL PERMIT 3-9020 AUTHORIZATION.

SURFACE ROUGHENING OF ALL EXPOSED SLOPES, COMBINED WITH TEMPORARY MULCHING, SHALL BE UTILIZED ON A REGULAR BASIS. BIODEGRADABLE EROSION CONTROL MATTING OR AN EQUIVALENT SHALL BE USED TO STABILIZE ALL SLOPES STEEPER THAN 1:3.

THE FORECAST OF RAINFALL EVENTS SHALL TRIGGER IMMEDIATE PROTECTION OF EXPOSED SOILS.

1.4.9 WINTER STABILIZATION

VARIOUS MEASURES SPECIFIC TO WINTER MAY BE NECESSARY SHOULD THE PROJECT EXTEND INTO WINTER (OCTOBER 15 THROUGH APRIL 15). REFER TO THE LOW RISK SITE HANDBOOK FOR GUIDANCE.

1.4.10 STABILIZE SOIL AT FINAL GRADE

EXPOSED SOIL MUST BE STABILIZED WITHIN 48 HOURS OF REACHING FINAL GRADE.

SEED, MULCH, FERTILIZER AND LIME SHALL BE USED TO ESTABLISH PERMANENT VEGETATION. FOR SLOPES STEEPER THAN 1:3, BIODEGRADABLE EROSION CONTROL MATTING OR AN EQUIVALENT SHALL BE USED INSTEAD OF MULCH.

1.4.11 DE-WATERING ACTIVITIES

DISCHARGE FROM DEWATERING ACTIVITIES THAT FLOWS OFF OF THE CONSTRUCTION SITE MUST NOT CAUSE OR CONTRIBUTE TO A VIOLATION OF THE VERMONT WATER QUALITY STANDARDS.

TREATMENT OF DEWATERING COFFERDAM IS NOT ANTICIPATED.

1.4.12 INSPECT YOUR SITE

INSPECT THE PROJECT SITE BASED ON SPECIAL PROVISION REQUIREMENTS OR CONSTRUCTION GENERAL PERMIT AUTHORIZATION STIPULATIONS.

1.5 SEQUENCE AND STAGING

THIS SECTION WILL BE DEVELOPED BY THE CONTRACTOR USING THE GUIDANCE OUTLINED IN THE VTRANS EPSC PLAN CONTRACTOR CHECKLIST.

1.5.1 CONSTRUCTION SEQUENCE

1.5.2 OFF-SITE ACTIVITIES

IN ADDITION TO THE CONTRACTOR CHECKLIST ANY ACTIVITIES OUTSIDE THE CONSTRUCTION LIMITS SHALL FOLLOW SPECIFICATION 105.25- 105.29 OF THE STANDARD SPECIFICATIONS FOR CONSTRUCTION.

1.5.3 UPDATES

BINGHAMVILLE SILT LOAM
0-2% SLOPE
TYPE C SOIL
K VALUE = 0.49
NOT HIGHLY ERODIBLE

VT STATE PLANE GRID

BEGIN BRIDGE
STA 16+62.00

END BRIDGE
STA 17+06.00

RIPARIAN BUFFER

CLASS II WETLANDS

SOUTH ROAD (TH 1)
TO FLETCHER

SOUTH RD (TH 1)
TO FAIRFIELD

EXISTING ROW

14+00 15+00 16+00 17+00 18+00 19+00 19+50

BEGIN APPROACH
STA 15+25.00
MATCH EXISTING

BEGIN PROJECT
STA 16+00.00

STONE FILL,
TYPE I

STONE FILL,
TYPE III
(TYP)

END PROJECT
STA 17+75.00

END APPROACH
STA 18+50.00
MATCH EXISTING

BENCHMARK 3
RR SPIKE IN TREE
ELEV = 599.89

FAIRFIELD RIVER
FLOW

NOTES:

1. FOR CLARITY, AREAS TO BE SEEDED AND MULCHED HAVE NOT BEEN INDICATED; HOWEVER, ALL DISTURBED AREAS SHALL BE SEEDED AND MULCHED AS APPLICABLE.

2. EXISTING CONTOURS ARE SHOWN. SEE CROSS SECTIONS FOR FINAL CONTOURS.

WINDSOR LOAMY FINE SAND
3-8% SLOPE
TYPE C SOIL
K VALUE = 0.17
NOT HIGHLY ERODIBLE

WINOOSKI SILT LOAM
0-3% SLOPE
TYPE C SOIL
K VALUE = 0.49
NOT HIGHLY ERODIBLE

EPSC PLAN

20 0 20

SCALE: 1" = 20'-0"

PROJECT NAME: FAIRFIELD	
PROJECT NUMBER: BRF 028I(25)	
FILE NAME: s12j156bdr_ero.dgn	PLOT DATE: 18-AUG-2014
PROJECT LEADER: R. YOUNG	DRAWN BY: K. FRIEDLAND
DESIGNED BY: R. KLINEFELTER	CHECKED BY: J. SALVATORI
EPSC PLAN	SHEET 30 OF 69

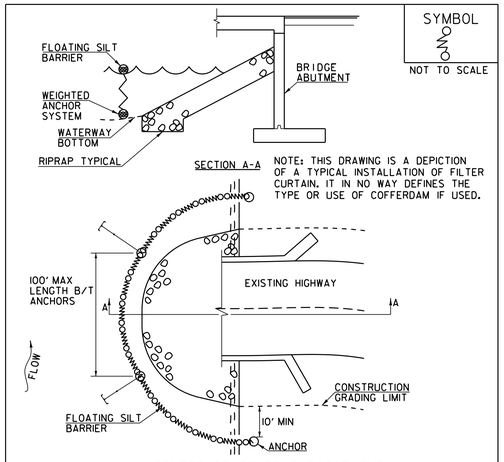

CONSTRUCTION SPECIFICATIONS

1. FILTER CURTAIN SHALL NOT BE PLACED ACROSS A FLOWING WATERWAY, OR IN A WATERWAY WITH STREAM VELOCITIES GREATER THAN 1.5 FEET/SECOND.
2. MAXIMUM 100' LENGTH BETWEEN ANCHORS.
3. LAST SECTION SHALL TERMINATE A MINIMUM OF 10' BEYOND LIMIT OF DISTURBANCE.
4. THE WEIGHTED ANCHOR SYSTEM SHALL BE A TYPE WHICH ALLOWS THE CURTAIN TO CONFORM TO THE BOTTOM OF THE WATERWAY.
5. THE CURTAIN SHALL BE REMOVED BY SLOWLY PULLING TOWARD THE SHORE MINIMIZING THE ESCAPE OF SEDIMENTS INTO WATERWAY.

FILTER CURTAIN

THIS WORK SHALL BE PERFORMED IN ACCORDANCE WITH SECTION 649 FOR GEOTEXTILE FOR FILTER CURTAIN (PAY ITEM 649.61).

REVISIONS	
APRIL 1, 2008	WHF
JANUARY 13, 2009	WHF
SEPTEMBER 4, 2009	WHF

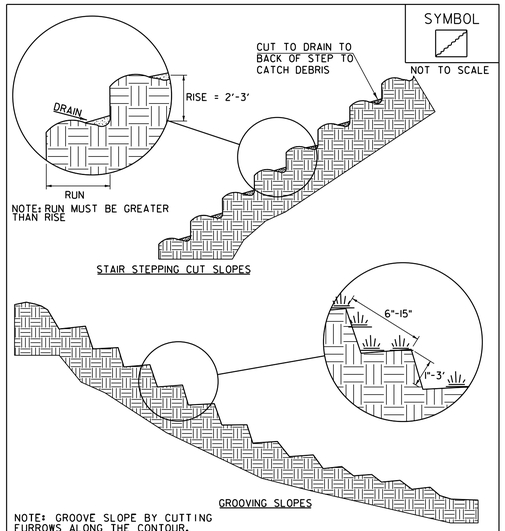

NOTE: GROOVE SLOPE BY CUTTING FURROWS ALONG THE CONTOUR. IRREGULARITIES IN THE SOIL SURFACE CATCH RAINWATER AND RETAIN LIME, FERTILIZER AND SEED.

ADAPTED FROM DETAILS PROVIDED BY: NEW YORK STATE DEC
ORIGINALLY DEVELOPED BY USDA-NRCS
VERMONT DEPARTMENT OF ENVIRONMENTAL CONSERVATION

SURFACE ROUGHENING

NOTES:
REFER TO "THE VERMONT STANDARDS & SPECIFICATIONS FOR EROSION PREVENTION & SEDIMENT CONTROL -2006- " FROM THE VT AGENCY OF NATURAL RESOURCES FOR ADDITIONAL GUIDANCE.

THIS WORK SHALL BE CONSIDERED INCIDENTAL TO THE CONTRACT

REVISIONS	
APRIL 1, 2008	WHF
JANUARY 13, 2009	WHF

VAOT RURAL AREA MIX

% WEIGHT	LBS/AC BROADCAST	LBS/AC HYDROSEED	NAME	GERM %	PURITY %
37.5%	22.5	45	CREEPING RED FESCUE	85%	98%
37.5%	22.5	45	TALL FESCUE	90%	95%
5.0%	3	6	RED TOP	90%	95%
15.0%	9	18	BIRDSFOOT TREFOIL	85%	98%
5.0%	3	6	ANNUAL RYE GRASS	85%	95%
100%	60	120			

VAOT URBAN AREA MIX

% WEIGHT	LBS/AC BROADCAST	LBS/AC HYDROSEED	NAME	GERM %	PURITY %
42.5%	34	68	CREEPING RED FESCUE	85%	98%
10.0%	8	16	PERENNIAL RYE GRASS	90%	95%
42.5%	34	68	KENTUCKY BLUE GRASS	85%	85%
5.0%	4	8	ANNUAL RYE GRASS	85%	95%
100%	80	160			

SOIL AMENDMENT GUIDANCE

FERTILIZER		LIME	
BROADCAST	HYDROSEED	BROADCAST	HYDROSEED
10-20-10	*FOLLOW*	PELLETIZED	*FOLLOW*
500 LBS/AC	*MANUFACTURER*	2 TONS/AC	*MANUFACTURER*

CONSTRUCTION GUIDANCE

1. RURAL SEED MIX: USE AS INDICATED IN THE PLANS AND/OR FOR ALL ESTABLISHED UPLAND (NON WETLAND) AREAS DISTURBED BY THE CONTRACTOR.
2. URBAN SEED MIX: USE AS INDICATED IN THE PLANS AND/OR FOR ALL ESTABLISHED LAWN AREAS DISTURBED BY THE CONTRACTOR.
3. ALL SEED MIXTURES: SHALL NOT HAVE A WEED CONTENT EXCEEDING 0.40% BY WEIGHT AND SHALL BE FREE OF ALL NOXIOUS SEED.
4. FERTILIZER AND LIMESTONE: SHALL FOLLOW RATES SHOWN ON PLAN OR AS DIRECTED BY THE ENGINEER
5. HAY MULCH: TO BE PLACED ON EARTH SLOPES AT THE RATE OF 2 TONS/ACRE, ACHIEVE 90% GROUND COVER OR AS DIRECTED BY THE ENGINEER.
6. TOPSOIL: TO BE USED WITH SEED AS INDICATED ON THE PLANS, OR AS DIRECTED BY THE ENGINEER.
7. HYDROSEEDING: ALTHOUGH GUIDANCE IS GIVEN ABOVE THE SITE CONDITIONS AND THE TYPE OF HYDROSEED WILL ULTIMATELY DICTATE THE AMOUNTS AND TYPES OF SOIL AMENDMENTS TO BE APPLIED
8. TURF ESTABLISHMENT: PLACING SEED, FERTILIZER, LIME AND MULCH PRIOR TO SEPTEMBER 15 AND AFTER APRIL 15 CAN BETTER ENSURE A VIGOROUS GROWTH OF GRASS.

ADAPTED FROM VTRANS TECHNICAL LANDSCAPE MANUAL FOR ROADWAYS AND TRANSPORTATION FACILITIES

TURF ESTABLISHMENT

THIS WORK SHALL BE PERFORMED IN ACCORDANCE WITH SECTION 651 FOR SEED (PAY ITEM 651.15)

REVISIONS	
JUNE 23, 2009	WHF
JANUARY 15, 2010	WHF
FEBRUARY 16, 2011	WHF

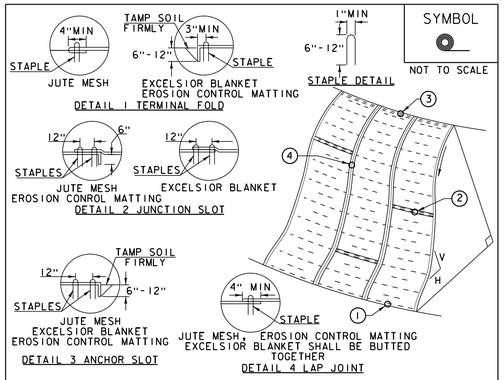

CONSTRUCTION SPECIFICATIONS

1. APPLY TO SLOPES GREATER THAN 3H: 1V OR WHERE NECESSARY TO AID IN ESTABLISHING VEGETATION.
2. APPLY FERTILIZER, LIME SEED PRIOR TO PLACING MATTING.
3. STAPLES ARE TO BE PLACED ALTERNATELY, IN COLUMNS APPROXIMATELY 2' APART AND IN ROWS APPROXIMATELY 3' APART. APPROXIMATELY 175 STAPLES ARE REQUIRED PER 4'X225' ROLL OF MATERIAL AND 125 STAPLES ARE REQUIRED PER 4'X150' ROLL OF MATERIAL.
4. DISTURBED AREAS SHALL BE SMOOTHLY GRADED. EROSION CONTROL MATERIAL SHALL BE PLACED LOOSELY OVER GROUND SURFACE. DO NOT STRETCH.
5. ALL TERMINAL ENDS AND TRANSVERSE LAPS SHALL BE STAPLED AT APPROXIMATELY 12" INTERVALS.

ADAPTED FROM DETAILS PROVIDED BY: NEW YORK STATE DEC
ORIGINALLY DEVELOPED BY USDA-NRCS
VERMONT DEPARTMENT OF ENVIRONMENTAL CONSERVATION

ROLLED EROSION CONTROL PRODUCT (RECP) SIDE SLOPE

NOTES:
REFER TO "THE VERMONT STANDARDS & SPECIFICATIONS FOR EROSION PREVENTION & SEDIMENT CONTROL -2006- " FROM THE VT AGENCY OF NATURAL RESOURCES FOR ADDITIONAL GUIDANCE.
THIS WORK SHALL BE PERFORMED IN ACCORDANCE WITH SECTION 653 AND AS SHOWN IN THE PLANS FOR TEMPORARY EROSION MATTING (PAY ITEM 653.20) ~~OR PERMANENT EROSION MATTING (PAY ITEM 653.21).~~

REVISIONS	
APRIL 16, 2007	JMF
JANUARY 13, 2009	WHF

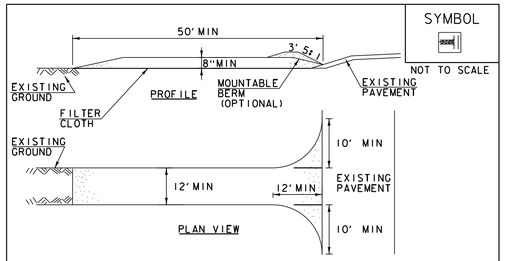

CONSTRUCTION SPECIFICATIONS

1. STONE SIZE- USE 1-4" STONE, RECLAIMED OR RECYCLED CONCRETE EQUIVALENT.
2. LENGTH- NOT LESS THAN 50' (EXCEPT ON A SINGLE RESIDENCE LOT WHERE A 30' MINIMUM LENGTH APPLIES).
3. THICKNESS- NOT LESS THAN 8".
4. WIDTH- 12' MINIMUM, BUT NOT LESS THAN THE FULL WIDTH AT POINTS WHERE INGRESS OR EGRESS OCCURS. 24' IF SINGLE ENTRANCE TO SITE.
5. GEOTEXTILE MUST BE PLACED OVER THE ENTIRE AREA PRIOR TO PLACING STONE.
6. SURFACE WATER- ALL SURFACE WATER FLOWING OR DIVERTED TOWARD CONSTRUCTION ENTRANCES SHALL BE PIPED BENEATH THE ENTRANCE. IF PIPING IS IMPRACTICAL, A MOUNTABLE BERM WITH 5:1 SLOPES WILL BE PERMITTED.
7. MAINTENANCE- THE ENTRANCE SHALL BE MAINTAINED IN A CONDITION WHICH WILL PREVENT TRACKING OR FLOWING OF SEDIMENT ONTO PUBLIC RIGHTS-OF-WAY, ALL SEDIMENT SPILLED, DROPPED, WASHED OR TRACKED ONTO PUBLIC RIGHTS-OF-WAY MUST BE REMOVED IMMEDIATELY.
8. WHEN WASHING IS REQUIRED, IT SHALL BE DONE ON AN AREA STABILIZED WITH STONE AND WHICH DRAINS INTO AN APPROVED SEDIMENT TRAPPING DEVICE.
9. PERIODIC INSPECTION AND NEEDED MAINTENANCE SHALL BE PROVIDED ACCORDING TO PERMIT REQUIREMENTS.

ADAPTED FROM DETAILS PROVIDED BY: NEW YORK STATE DEC
ORIGINALLY DEVELOPED BY USDA-NRCS
VERMONT DEPARTMENT OF ENVIRONMENTAL CONSERVATION

STABILIZED CONSTRUCTION ENTRANCE

NOTES:
REFER TO "THE VERMONT STANDARDS & SPECIFICATIONS FOR EROSION PREVENTION & SEDIMENT CONTROL -2006- " FROM THE VT AGENCY OF NATURAL RESOURCES FOR ADDITIONAL GUIDANCE.

THIS WORK SHALL BE PERFORMED IN ACCORDANCE WITH SECTION 653 FOR VEHICLE TRACKING PAD (PAY ITEM 653.35) OR AS SPECIFIED IN THE CONTRACT.

REVISIONS	
MARCH 24, 2008	WHF
JANUARY 13, 2009	WHF

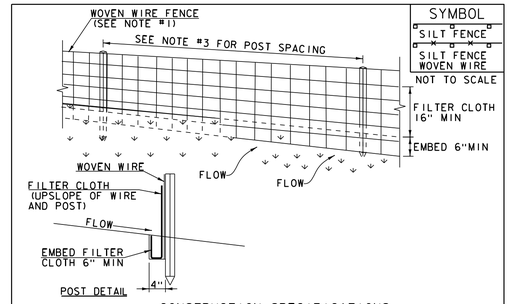

CONSTRUCTION SPECIFICATIONS

1. WOVEN WIRE REINFORCED FENCE IS REQUIRED WITHIN 100' UPSLOPE OF RECEIVING WATERS WHEN THE PROJECT FALLS UNDER A CONSTRUCTION STORMWATER PERMIT. WOVEN WIRE SHALL BE A MIN. 14 GAUGE WITH A 6" MAX. MESH OPENING.
2. FILTER CLOTH SHALL BE EITHER FILTER X, MIRAFI100X, STABILINKA T140N OR APPROVED EQUIVALENT.
3. POST SPACING FOR WIRE-BACKED FENCE SHALL BE 10' MAXIMUM. FOR FILTER-CLOTH FENCE, WHEN ELONGATION IS >50%, POST SPACING SHALL NOT EXCEED 4' AND WHEN ELONGATION IS <50%, POST SPACING SHALL NOT EXCEED 6'.
4. WOVEN WIRE FENCE IS TO BE FASTENED SECURELY TO FENCE POSTS WITH WIRE TIES. FILTER CLOTH IS TO BE FASTENED SECURELY TO WOVEN WIRE FENCE WITH TIES SPACED EVERY 24" AT TOP AND MID SECTION.
5. WHEN TWO SECTIONS OF FILTER CLOTH ADJOIN EACH OTHER THEY SHALL BE OVER-LAPPED BY 6" AND FOLDED.
6. MAINTENANCE SHALL BE PERFORMED AS NEEDED AND MATERIAL REMOVED WHEN SEDIMENT REACHES HALF OF FABRIC HEIGHT.

ADAPTED FROM DETAILS PROVIDED BY: NEW YORK STATE DEC
ORIGINALLY DEVELOPED BY USDA-NRCS
VERMONT DEPARTMENT OF ENVIRONMENTAL CONSERVATION

SILT FENCE

NOTES:
REFER TO "THE VERMONT STANDARDS & SPECIFICATIONS FOR EROSION PREVENTION & SEDIMENT CONTROL -2006- " FROM THE VT AGENCY OF NATURAL RESOURCES FOR ADDITIONAL GUIDANCE.

THIS WORK SHALL BE PERFORMED IN ACCORDANCE WITH SECTION 649 AND AS SHOWN IN THE PLANS FOR GEOTEXTILE FOR SILT FENCE (PAY ITEM 649.51) OR GEOTEXTILE FOR SILT FENCE, WOVEN WIRE REINFORCED (PAY ITEM 649.515).

REVISIONS	
MARCH 21, 2008	WHF
DECEMBER 11, 2008	WHF
JANUARY 13, 2009	WHF

PROJECT NAME: FAIRFIELD
PROJECT NUMBER: BRF 028I(25)

FILE NAME: s12j156erodetails.dgn
PROJECT LEADER: R. YOUNG
DESIGNED BY: R. KLINEFELTER
EPSC DETAILS

PLOT DATE: 18-AUG-2014
DRAWN BY: K. FRIEDLAND
CHECKED BY: J. SALVATORI
SHEET 31 OF 69

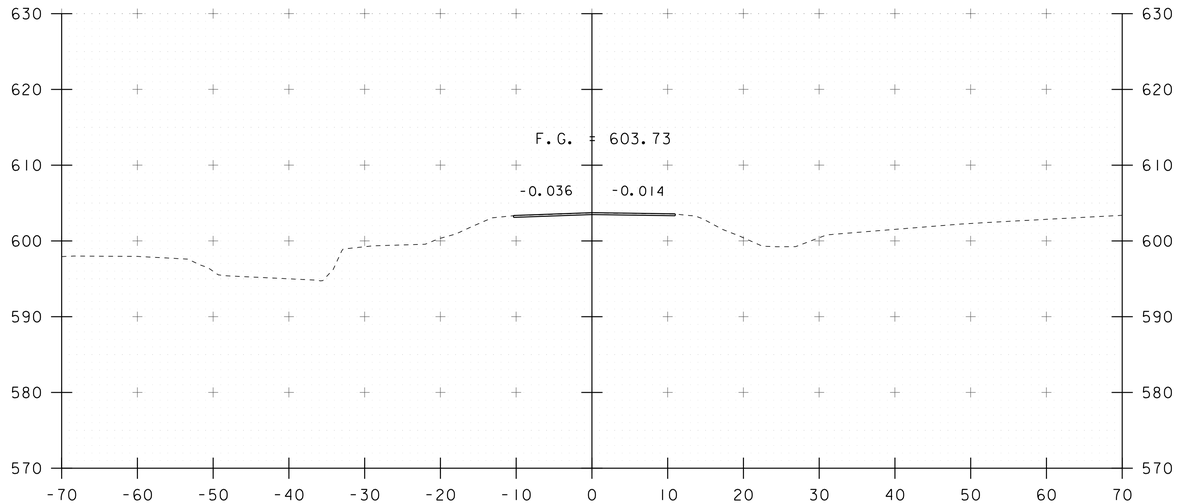

15+50

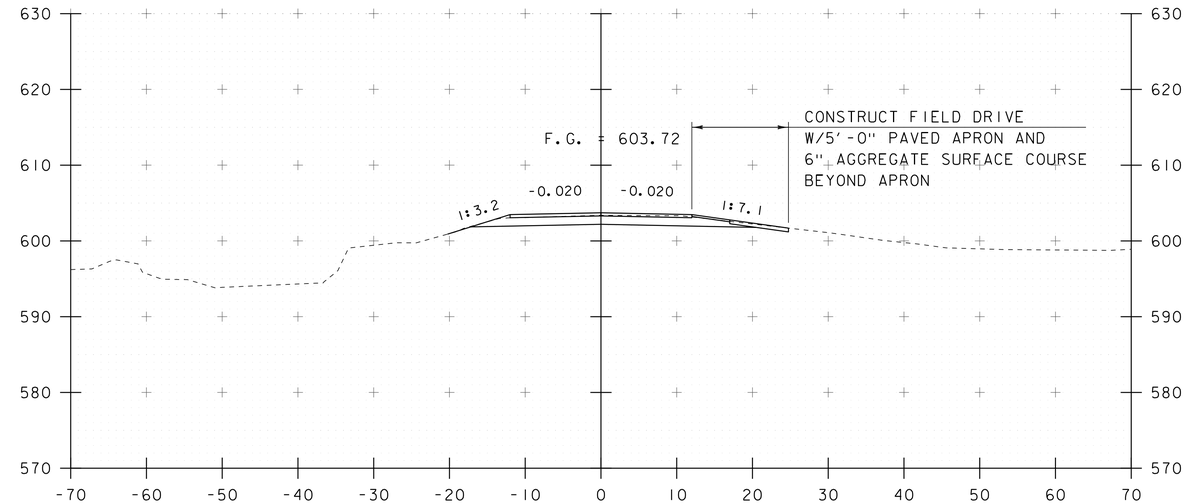

16+00
BEGIN PROJECT

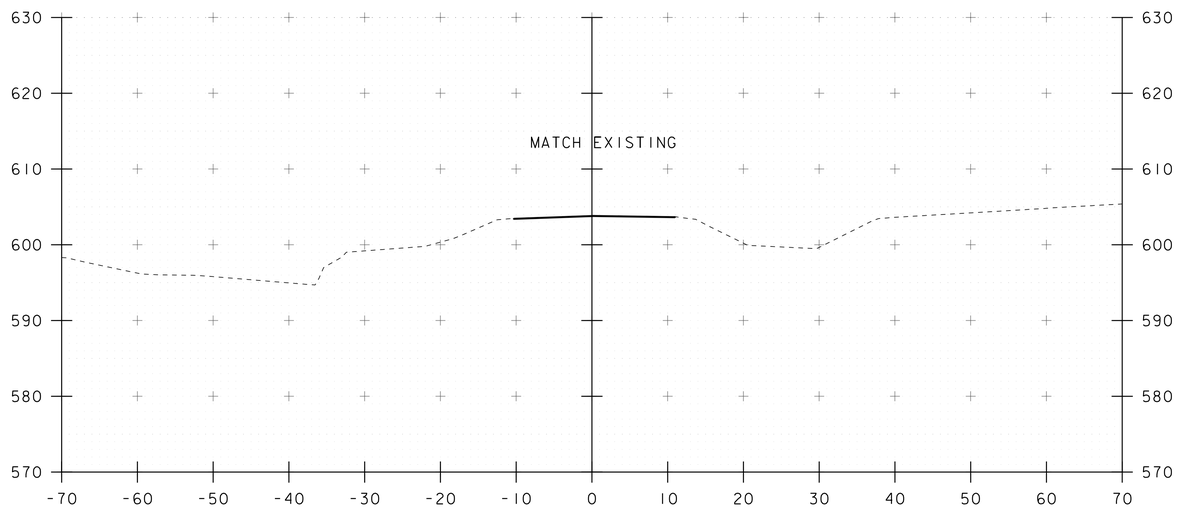

15+25
BEGIN APPROACH

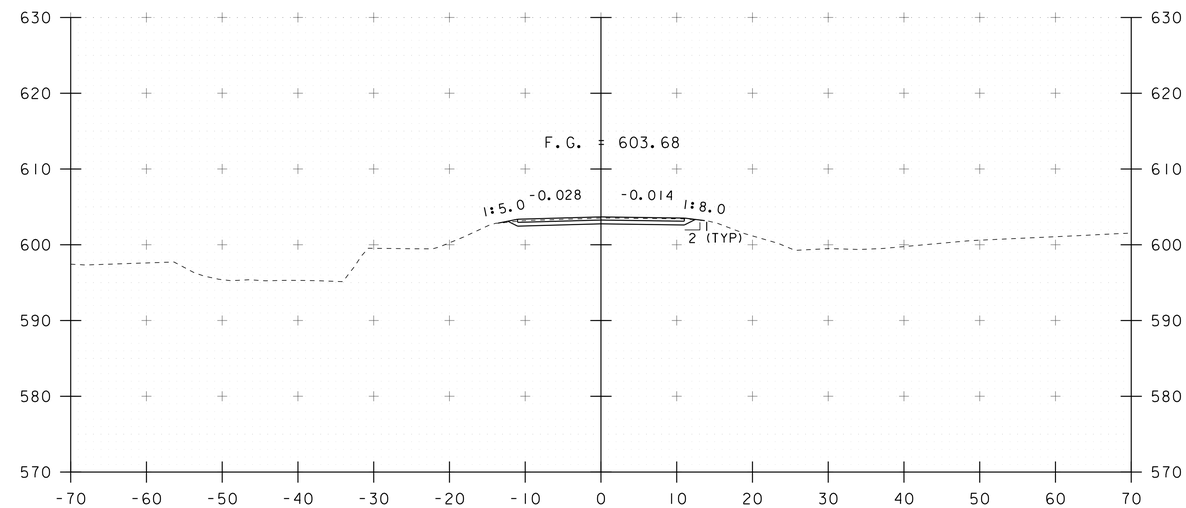

15+75

STA. 15+25 TO STA. 16+00

PROJECT NAME: FAIRFIELD	
PROJECT NUMBER: BRF 028I(25)	
FILE NAME: s12j56xs.dgn	PLOT DATE: 18-AUG-2014
PROJECT LEADER: R. YOUNG	DRAWN BY: R. KLINEFELTER
DESIGNED BY: R. KLINEFELTER	CHECKED BY: J. SALVATORI
MAINLINE SECTIONS	SHEET 32 OF 69

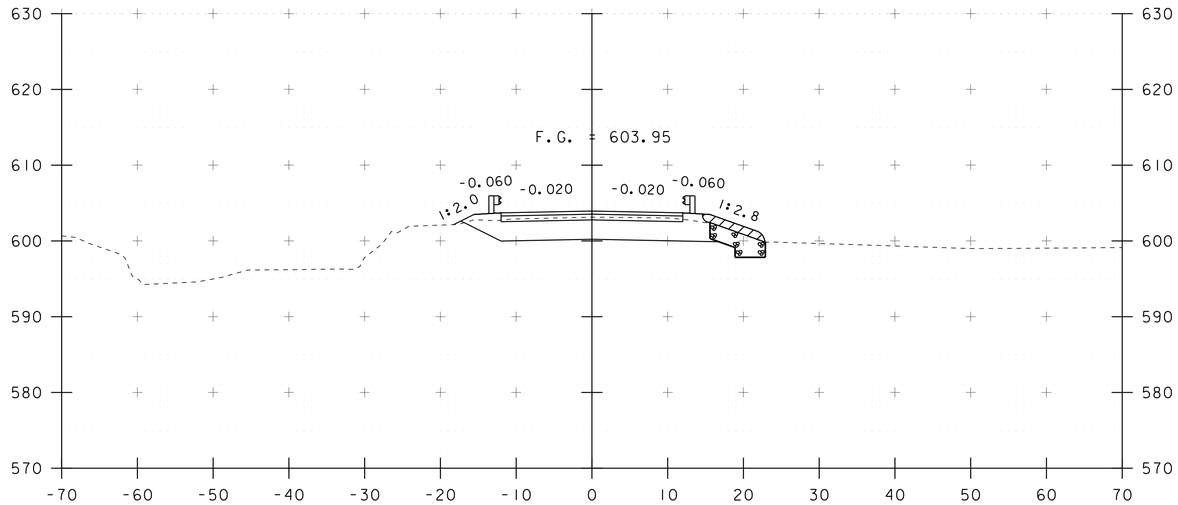

16+50
BEGIN BRIDGE STA 16+62.00

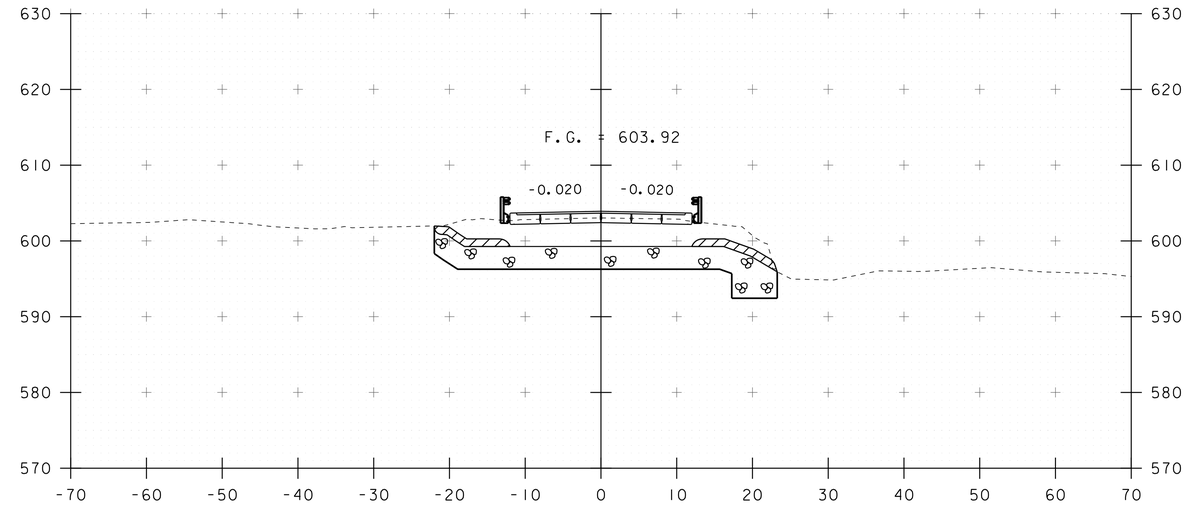

17+00
END BRIDGE STA 17+06.00

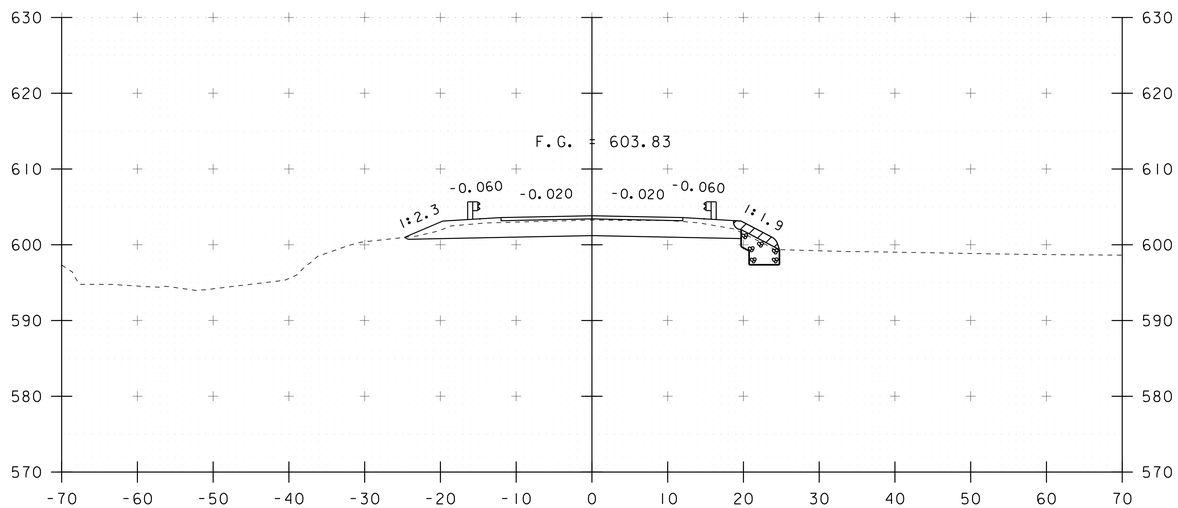

16+25

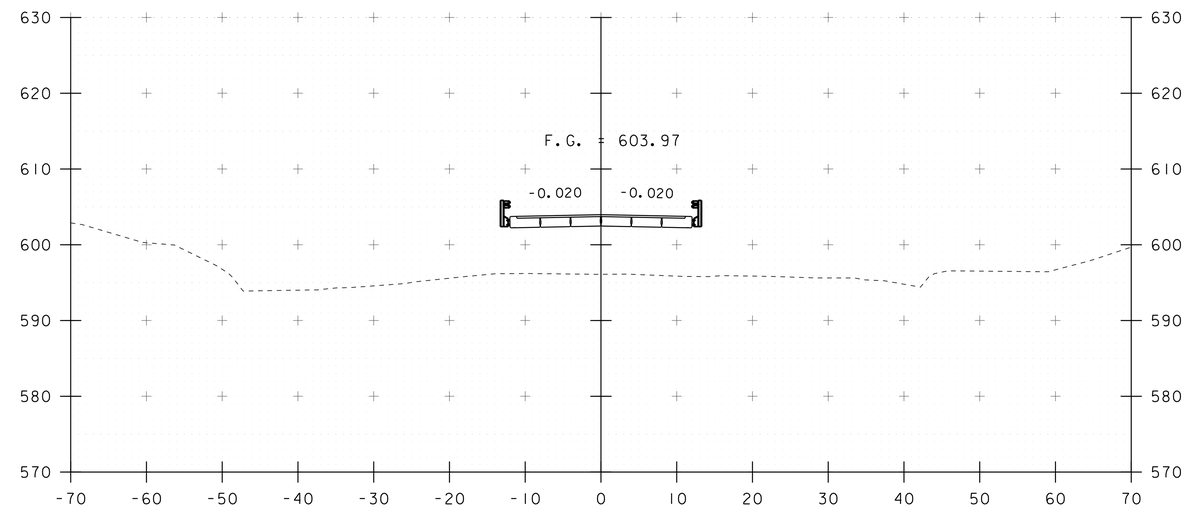

16+75

STA. 16+25 TO STA. 17+00

PROJECT NAME: FAIRFIELD	
PROJECT NUMBER: BRF 0281(25)	
FILE NAME: s12j156xs.dgn	PLOT DATE: 18-AUG-2014
PROJECT LEADER: R. YOUNG	DRAWN BY: R. KLINEFELTER
DESIGNED BY: R. KLINEFELTER	CHECKED BY: J. SALVATORI
MAINLINE SECTIONS	SHEET 33 OF 69

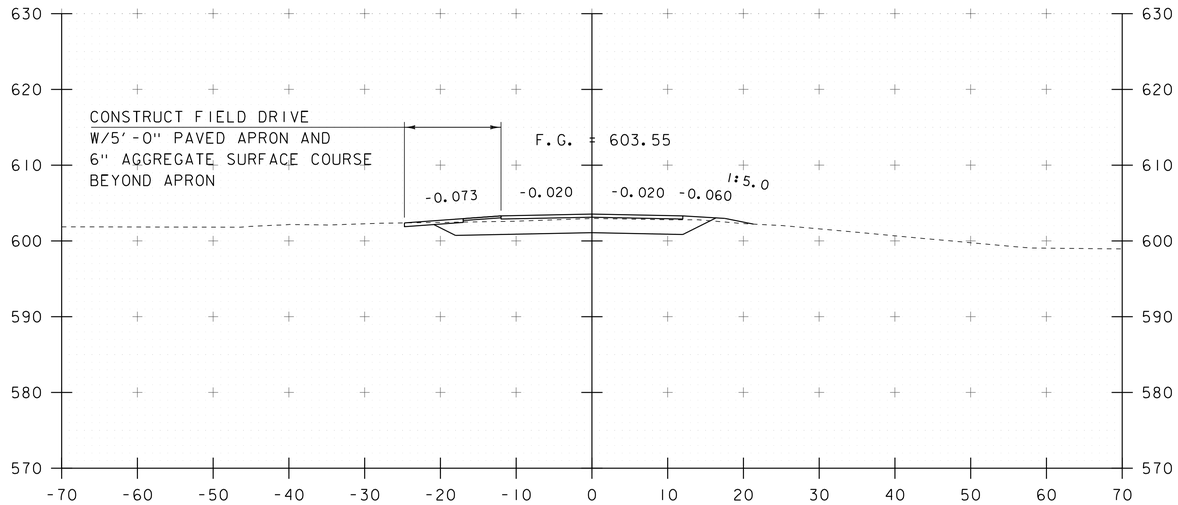

17+50

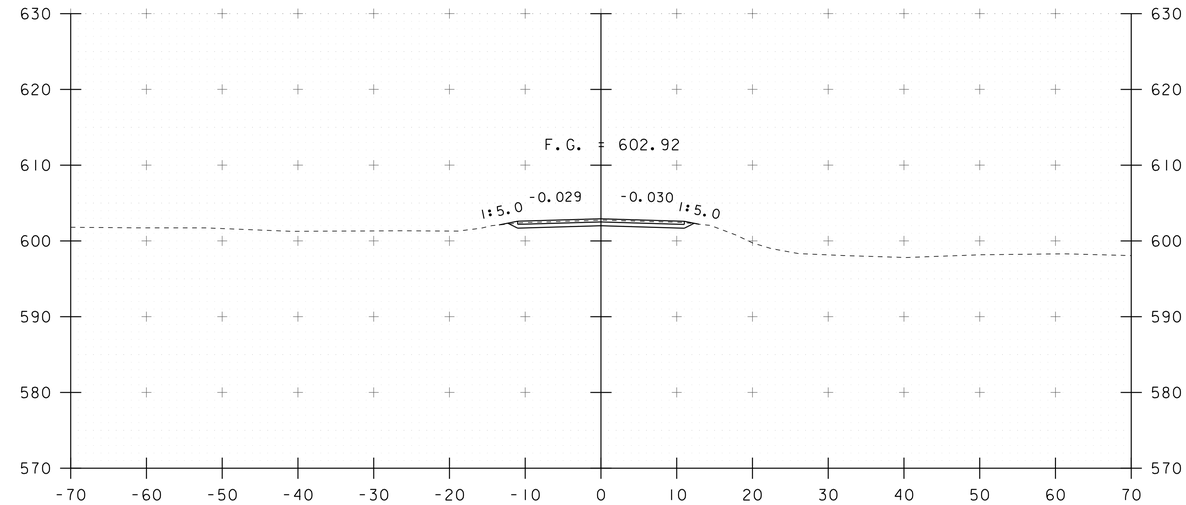

18+00

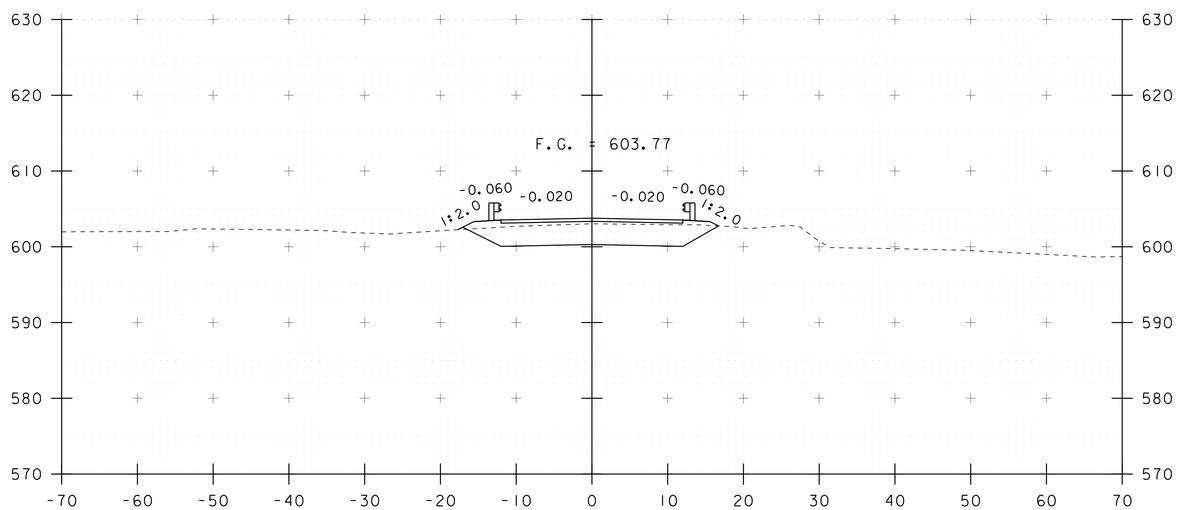

17+25

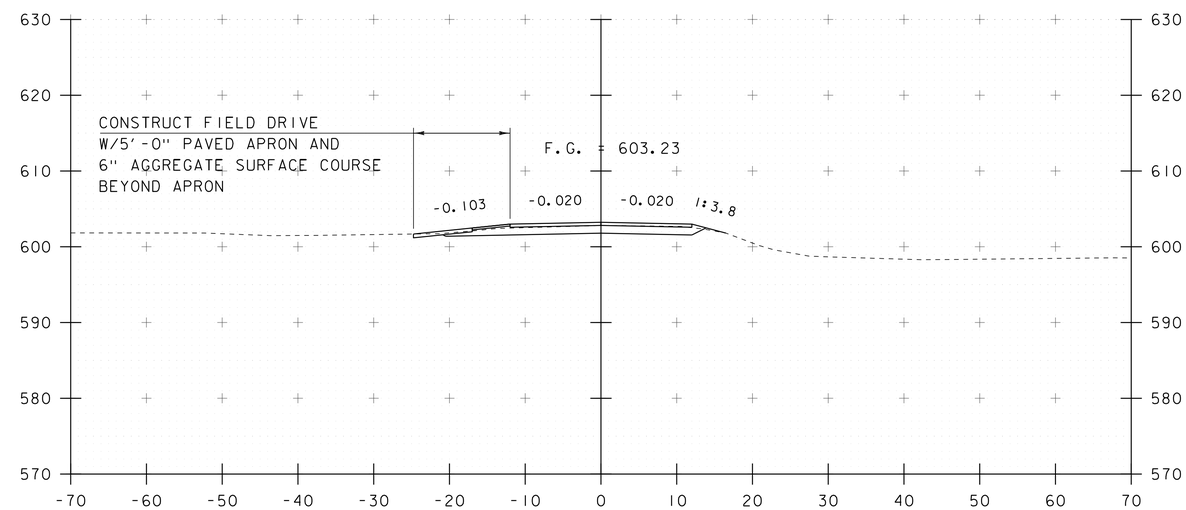

17+75
END PROJECT

STA. 17+25 TO STA. 18+00

PROJECT NAME: FAIRFIELD	
PROJECT NUMBER: BRF 028I(25)	
FILE NAME: s12j56xs.dgn	PLOT DATE: 18-AUG-2014
PROJECT LEADER: R. YOUNG	DRAWN BY: R. KLINEFELTER
DESIGNED BY: R. KLINEFELTER	CHECKED BY: J. SALVATORI
MAINLINE SECTIONS	SHEET 34 OF 69

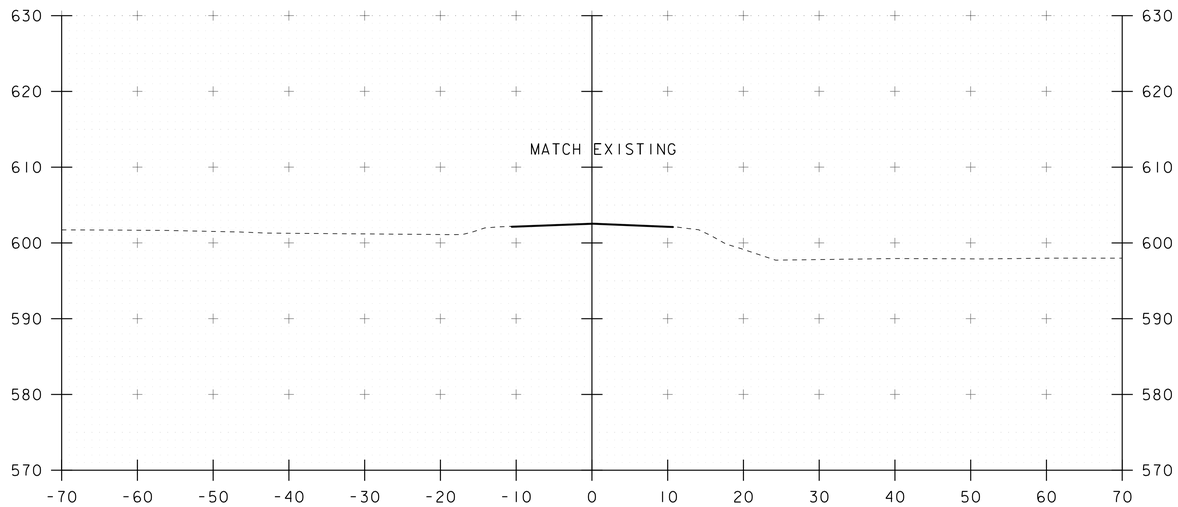

18+50
END APPROACH

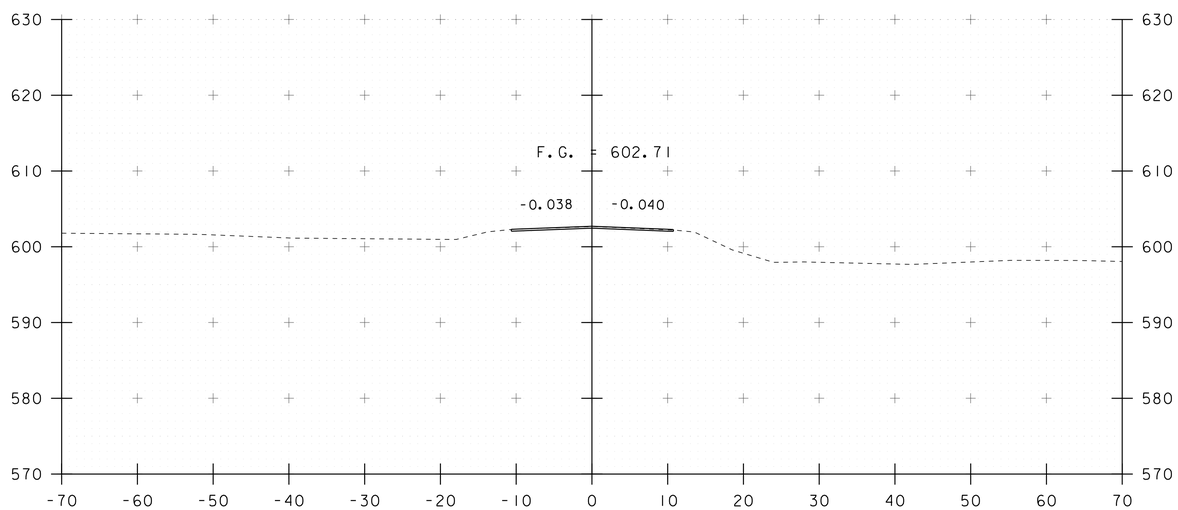

18+25

STA. 18+25 TO STA. 18+50

PROJECT NAME: FAIRFIELD	
PROJECT NUMBER: BRF 0281(25)	
FILE NAME: s12j156xs.dgn	PLOT DATE: 18-AUG-2014
PROJECT LEADER: R. YOUNG	DRAWN BY: R. KLINEFELTER
DESIGNED BY: R. KLINEFELTER	CHECKED BY: J. SALVATORI
MAINLINE SECTIONS	SHEET 35 OF 69

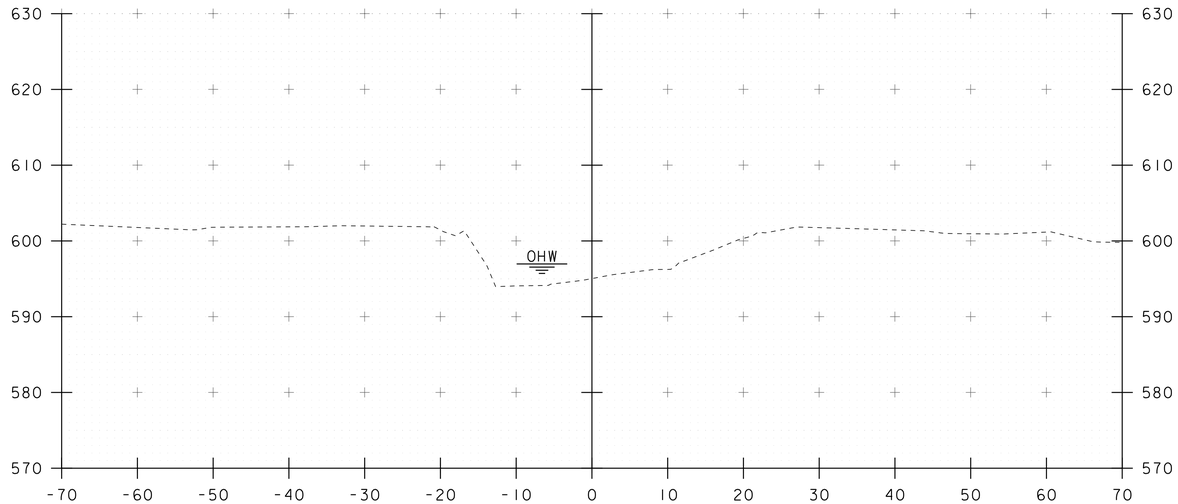

STA 50+78.00 LT AND RT
BEGIN STONE FILL, TYPE III
GEOTEXTILE UNDER STONE FILL
GRUBBING MATERIAL
UNCLASSIFIED CHANNEL EXCAVATION

50+75

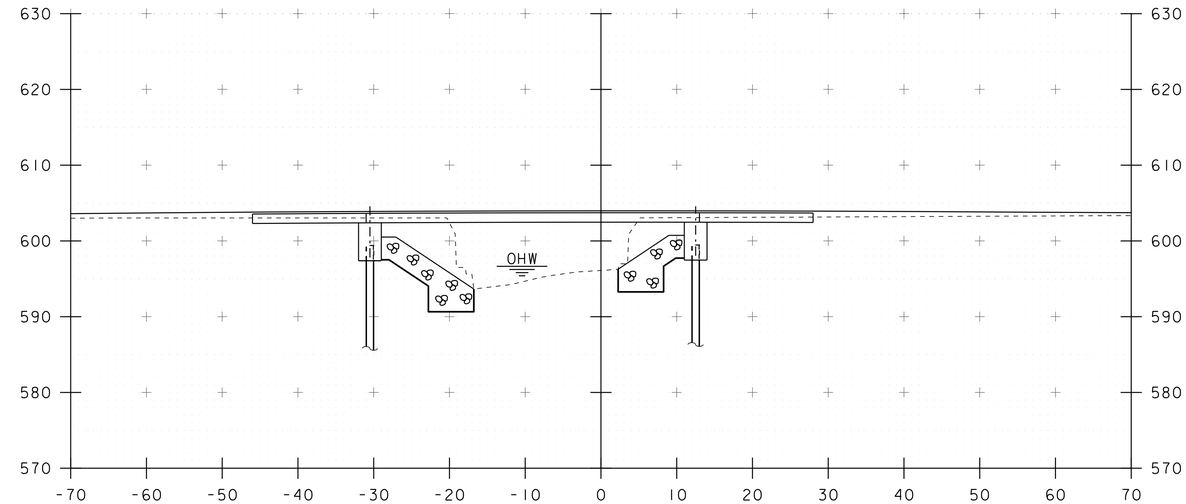

51+00

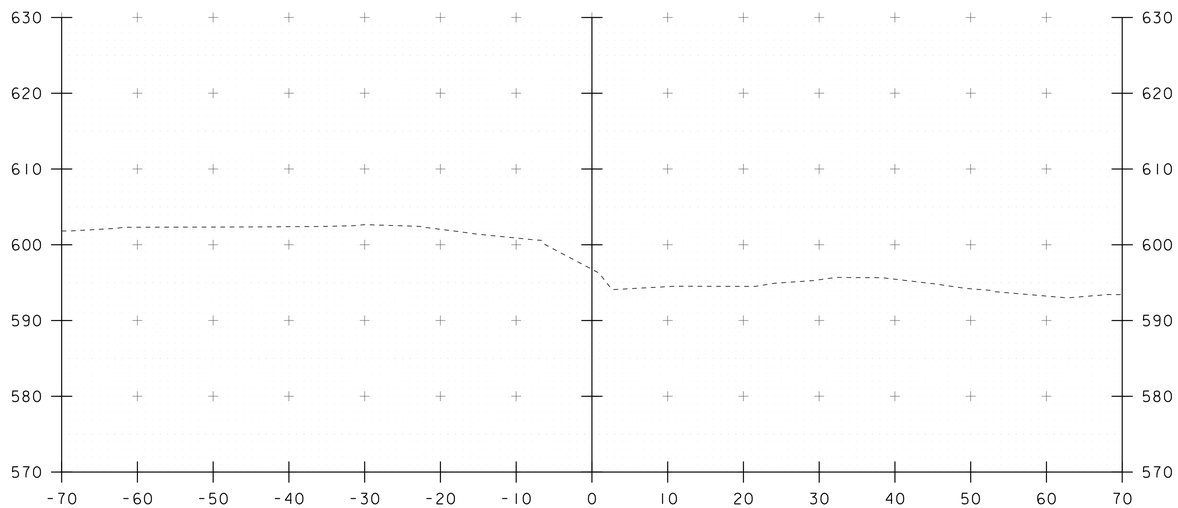

50+50

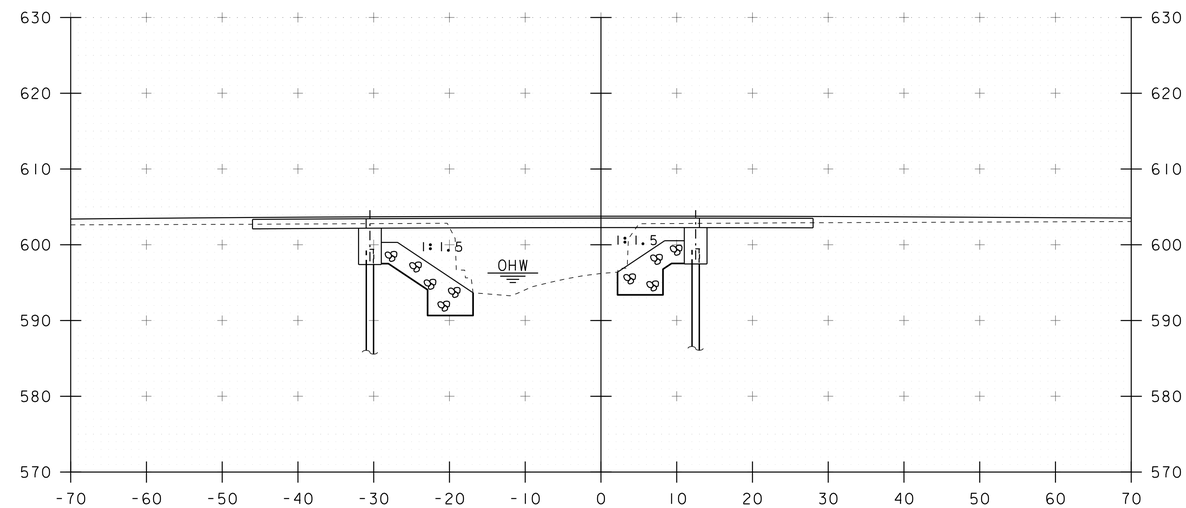

STA 50+85.00 LT AND RT
END GRUBBING MATERIAL

50+90

STA. 50+50 TO STA. 51+00

PROJECT NAME: FAIRFIELD	
PROJECT NUMBER: BRF 0281(25)	
FILE NAME: s12j156xs.dgn	PLOT DATE: 18-AUG-2014
PROJECT LEADER: R. YOUNG	DRAWN BY: R. KLINEFELTER
DESIGNED BY: R. KLINEFELTER	CHECKED BY: J. SALVATORI
CHANNEL SECTIONS	SHEET 36 OF 69

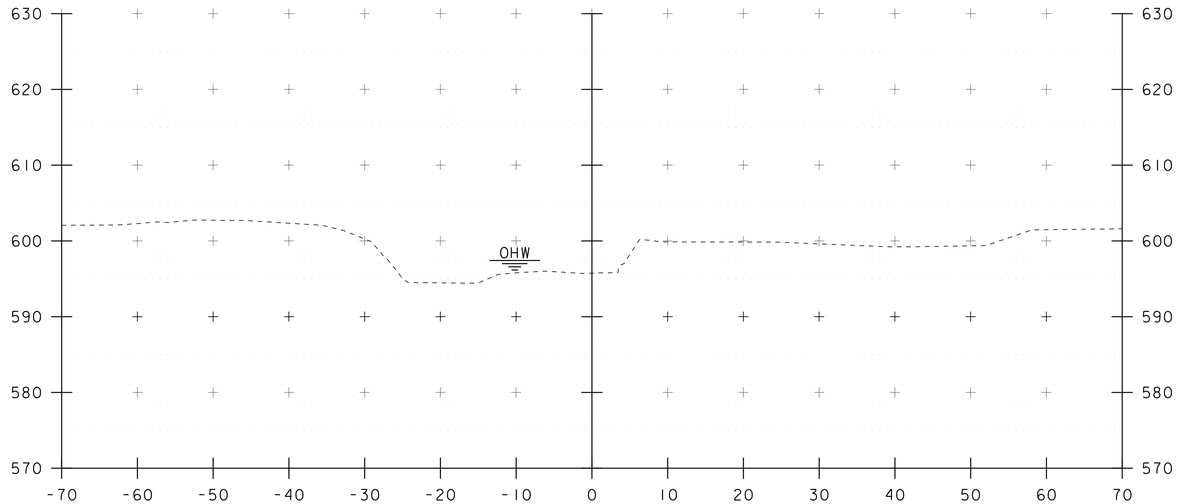

51+25

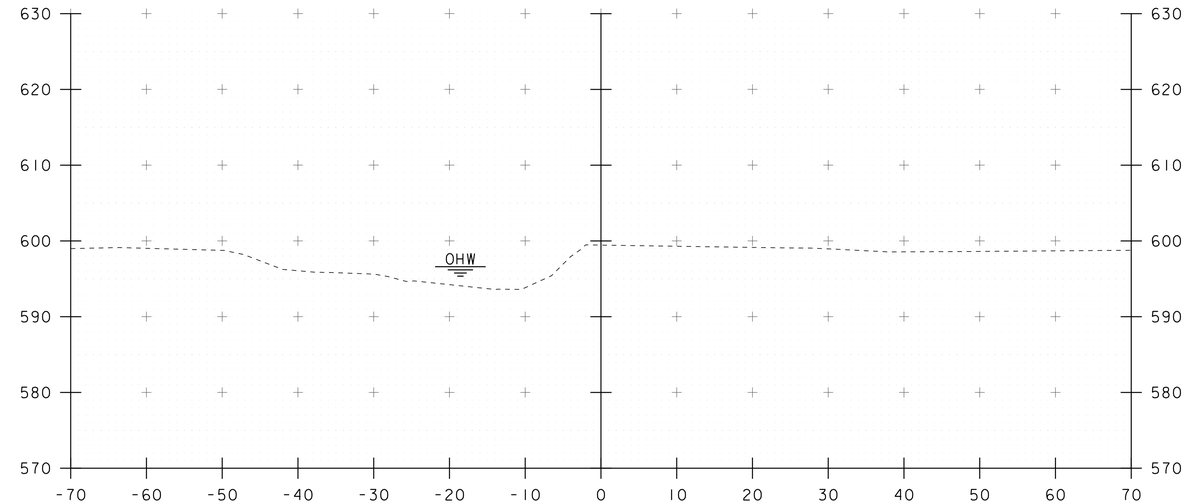

51+75

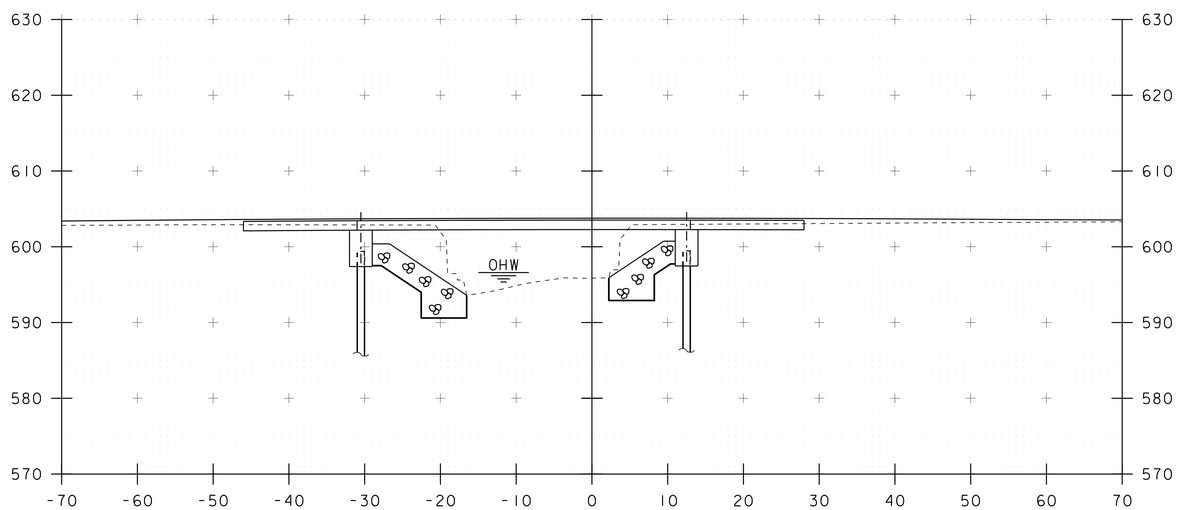

STA 51+22.00 LT AND RT
END STONE FILL, TYPE III
GEOTEXTILE UNDER STONE FILL
GRUBBING MATERIAL
UNCLASSIFIED CHANNEL EXCAVATION

51+10

STA 51+15.00 LT AND RT
BEGIN GRUBBING MATERIAL

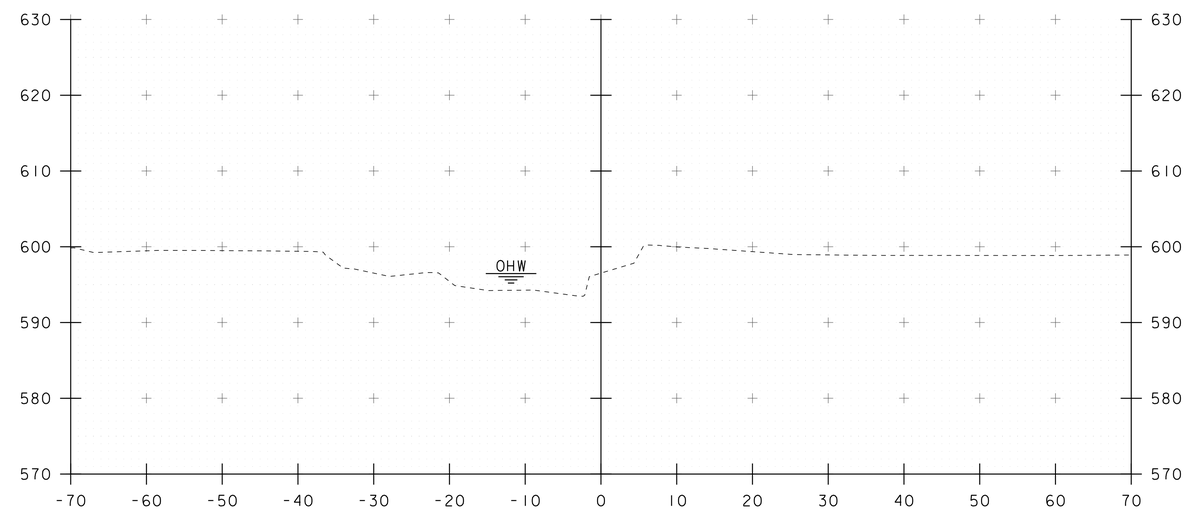

51+50

STA. 51+10 TO STA. 51+75

PROJECT NAME: FAIRFIELD	
PROJECT NUMBER: BRF 028I(25)	
FILE NAME: s12j156xs.dgn	PLOT DATE: 18-AUG-2014
PROJECT LEADER: R. YOUNG	DRAWN BY: R. KLINEFELTER
DESIGNED BY: R. KLINEFELTER	CHECKED BY: J. SALVATORI
CHANNEL SECTIONS	SHEET 37 OF 69

STATE OF VERMONT
AGENCY OF TRANSPORTATION

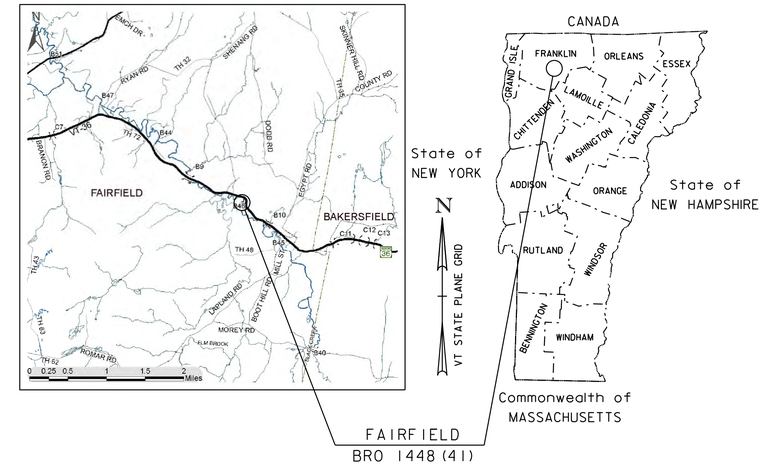

PROPOSED IMPROVEMENT
BRIDGE PROJECT

TOWN OF FAIRFIELD
COUNTY OF FRANKLIN

ROUTE NO : ELM BROOK ROAD, TOWN HIGHWAY 47 (CLASS 3) TOWN BRIDGE NO : 46

PROJECT LOCATION: LOCATED 0.05 MILES WESTERLY OF THE JUNCTION OF TOWN HIGHWAY 47 AND VT ROUTE 36.

PROJECT DESCRIPTION: REPLACEMENT OF EXISTING BRIDGE WITH RELATED ROADWAY APPROACH AND CHANNEL WORK.

LENGTH OF STRUCTURE: 54.00 FEET
LENGTH OF ROADWAY: 21.00 FEET
LENGTH OF PROJECT: 75.00 FEET

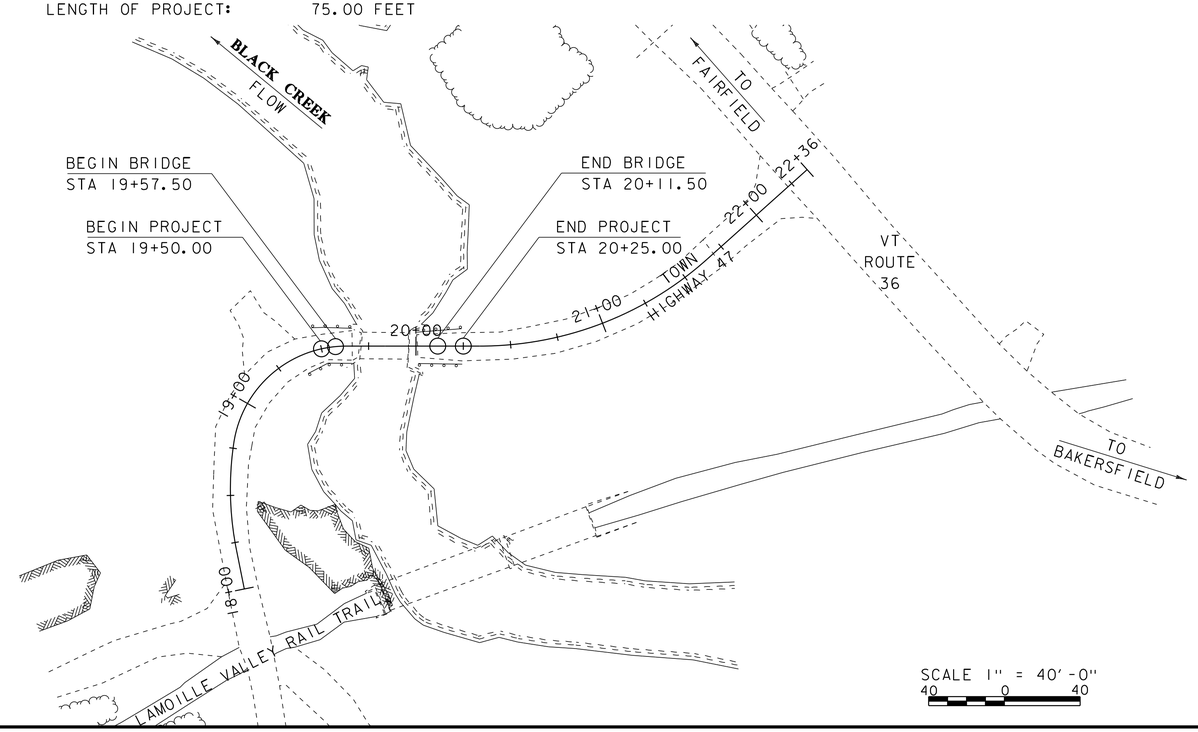

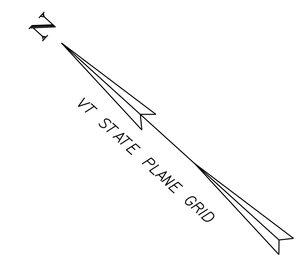

SCALE 1" = 40'-0"
40 0 40

THESE PLANS ARE SUBJECT TO SUCH ENGINEERING CHANGES AS MAY BE REQUIRED BY THE FEDERAL HIGHWAY ADMINISTRATION OR THE DIRECTOR OF PROGRAM DEVELOPMENT.

CONSTRUCTION IS TO BE CARRIED ON IN ACCORDANCE WITH THESE PLANS AND THE STANDARD SPECIFICATIONS FOR CONSTRUCTION DATED 2011, AS APPROVED BY THE FEDERAL HIGHWAY ADMINISTRATION ON JULY 20, 2011 FOR USE ON THIS PROJECT, INCLUDING ALL SUBSEQUENT REVISIONS AND SUCH REVISED SPECIFICATIONS AND SPECIAL PROVISIONS AS ARE INCORPORATED IN THESE PLANS.

QUALITY ASSURANCE PROGRAM : LEVEL 2	
SURVEYED BY :	L. ORVIS
SURVEYED DATE :	3-11-2012
DATUM	
VERTICAL	NAVD88
HORIZONTAL	NAD 83 (07)

PROJECT MANAGER :	R. YOUNG, P.E.
PROJECT NAME :	FAIRFIELD
PROJECT NUMBER :	BRO 1448(41)
SHEET 38 OF 69 SHEETS	

STATE OF VERMONT
AGENCY OF TRANSPORTATION

PRELIMINARY INFORMATION SHEET (BRIDGE)

Version
LRFD

INDEX OF SHEETS

PLAN SHEETS

STANDARDS LIST

FINAL HYDRAULIC REPORT

HYDROLOGIC DATA

Date: February 2013

DRAINAGE AREA : 39.2 sq. mi.
CHARACTER OF TERRAIN : Hilly, rural, mix of forest and meadow
STREAM CHARACTERISTICS : Sinuous, alluvial, incised
NATURE OF STREAMBED : Clay and silt

PEAK FLOW DATA

Q 2.33 =	1750 cfs	Q 50 =	4050 cfs
Q 10 =	2650 cfs	Q 100 =	4740 cfs
Q 25 =	3450 cfs	Q 500 =	6050 cfs

DATE OF FLOOD OF RECORD: Unknown
ESTIMATED DISCHARGE: Unknown
WATER SURFACE ELEV.: Unknown
NATURAL STREAM VELOCITY: @ Q25 = 7.4 cfs
ICE CONDITIONS : Moderate
DEBRIS: Moderate
DOES THE STREAM REACH MAXIMUM HIGHWATER ELEV. RAPIDLY? No
IS ORDINARY RISE RAPID? No
IS STAGE AFFECTED BY UPSTREAM OR DOWNSTREAM CONDITIONS? No
IF YES, DESCRIBE:

WATERSHED STORAGE: <1%
HEADWATERS:
UNIFORM: X
IMMEDIATELY ABOVE SITE:

EXISTING STRUCTURE INFORMATION

STRUCTURE TYPE: Single span rolled beam bridge
YEAR BUILT: 1919
CLEAR SPAN(NORMAL TO STREAM): 27'
VERTICAL CLEARANCE ABOVE STREAMBED: ~11'
WATERWAY OF FULL OPENING: 265 sq. ft.
DISPOSITION OF STRUCTURE: Replace
TYPE OF MATERIAL UNDER SUBSTRUCTURE: See borings

WATER SURFACE ELEVATIONS AT:

Q2.33 =	366.7'	VELOCITY =	9.3 fps
Q10 =	368.9'	"	7.7 fps
Q25 =	369.4'	"	8.8 fps
Q50 =	369.4'	"	8.6 fps
Q100 =	369.4'	"	8.2 fps

LONG TERM STREAMBED CHANGES: None noted

IS THE ROADWAY OVERTOPPED BELOW Q100: Yes
FREQUENCY: Below Q10
RELIEF ELEVATION: 367.0'
DISCHARGE OVER ROAD @Q100: 1010 cfs

UPSTREAM STRUCTURE

TOWN:	Fairfield	DISTANCE:	120'
HIGHWAY # :	Lamoille Valley Rail Trail	STRUCTURE #:	
CLEAR SPAN:	115'	CLEAR HEIGHT:	~14'
YEAR BUILT:		FULL WATERWAY:	1060 sq. ft.
STRUCTURE TYPE:	2-span steel girder		

DOWNSTREAM STRUCTURE

TOWN:	Fairfield	DISTANCE:	5350'
HIGHWAY # :	VT 36	STRUCTURE #:	BR 9
CLEAR SPAN:	80'	CLEAR HEIGHT:	17'
YEAR BUILT:	1983	FULL WATERWAY:	1250 sq. ft.
STRUCTURE TYPE:	Welded Girder		

LRFR LOAD RATING FACTORS

LOADING LEVELS	TRUCK						
	H-20	HL-93	3S2	6 AXLE	3A. STR.	4A. STR.	5A. SEMI
TONNAGE	**20**	**36**	**36**	**66**	**30**	**34.5**	**38**
INVENTORY	1.82	1.04					
POSTING							
OPERATING	2.35	1.35	2.39	1.3	1.7	1.55	1.88
COMMENTS:							

PROPOSED STRUCTURE

STRUCTURE TYPE: Concrete solid slab bridge

CLEAR SPAN(NORMAL TO STREAM): 48'
VERTICAL CLEARANCE ABOVE STREAMBED: ~11'
WATERWAY OF FULL OPENING: 360 sq. ft.

WATER SURFACE ELEVATIONS AT:

Q2.33 =	365.7'	VELOCITY=	8.9 fps
Q10 =	367.6'	"	11.3 fps
Q25 =	369.1'	"	8.1 fps
Q50 =	369.4'	"	8.8 fps
Q100 =	369.4'	"	10.2 fps

IS THE ROADWAY OVERTOPPED BELOW Q100: Yes
FREQUENCY: Below Q10
RELIEF ELEVATION: 366.8'
DISCHARGE OVER ROAD @Q100: 1100 cfs

AVERAGE LOW ELEVATION OF SUPERSTRUCTURE: 367.6'
VERTICAL CLEARANCE: @ Q25 = -1.5'

SCOUR: Contraction scour ~ 6' at Q2.33 and 10' at Q10.

REQUIRED CHANNEL PROTECTION: Stone Fill, Type III

PERMIT INFORMATION

AVERAGE DAILY FLOW:	80 cfs	DEPTH OR ELEVATION:
ORDINARY LOW WATER:	40 cfs	358'
ORDINARY HIGH WATER:	750 cfs	363'

TEMPORARY BRIDGE REQUIREMENTS

STRUCTURE TYPE: None required
CLEAR SPAN (NORMAL TO STREAM):
VERTICAL CLEARANCE ABOVE STREAMBED:
WATERWAY AREA OF FULL OPENING:

ADDITIONAL INFORMATION

TRAFFIC MAINTENANCE NOTES

1. MAINTAIN ONE-WAY TRAFFIC ON THE EXISTING STRUCTURE.
2. TRAFFIC SIGNALS ARE NOT NECESSARY.
3. SIDEWALKS ARE NOT NECESSARY

DESIGN VALUES

1.	DESIGN LIVE LOAD		HL-93
2.	FUTURE PAVEMENT	d_p:	3.0 INCH
3.	DESIGN SPAN	L:	51.00 FT
4.	MIN. MID-SPAN POS. CAMBER @ RELEASE (PRESTRESSED UNITS)	Δ:	- - -
5.	PRESTRESSING STRAND (0.60 INCH DIAMETER - LOW RELAX)	f_y:	270 KSI
6.	PRESTRESSED CONCRETE STRENGTH	f'_c:	8.0 KSI
7.	PRESTRESSED CONCRETE RELEASE STRENGTH	f'_{ci}:	6.0 KSI
8.	CONCRETE, HIGH PERFORMANCE CLASS AA	f'_c:	4.0 KSI
9.	CONCRETE, HIGH PERFORMANCE CLASS A	f'_c:	4.0 KSI
10.	CONCRETE, HIGH PERFORMANCE CLASS B	f'_c:	3.5 KSI
11.	CONCRETE, CLASS C	f'_c:	3.0 KSI
12.	REINFORCING STEEL	f_y:	60 KSI
13.	STRUCTURAL STEEL AASHTO M270	f_y:	- - -
14.	NOMINAL BEARING RESISTANCE OF SOIL	q_n:	4.0 KSF
15.	SOIL BEARING RESISTANCE FACTOR (REFER TO AASHTO LRFD)	ϕ:	- - -
16.	NOMINAL BEARING RESISTANCE OF ROCK	q_n:	10.0 KSF
17.	ROCK BEARING RESISTANCE FACTOR (REFER TO AASHTO LRFD)	ϕ:	- - -
18.	PILE RESISTANCE FACTOR	ϕ:	0.65
19.	LATERAL PILE DEFLECTION	Δ:	0.94 INCH
20.	BASIC WIND SPEED	V_{3s}:	- - -
21.	MINIMUM GROUND SNOW LOAD	p_g:	- - -
22.	SEISMIC DATA PGA: 0.65	S_s:	- - -
		S_1:	- - -
23.			
24.			- - -
25.			- - -
26.			- - -

AS BUILT "REBAR" DETAIL

LEVEL I	LEVEL II	LEVEL III
TYPE:	TYPE:	TYPE:
GRADE:	GRADE:	GRADE:

TRAFFIC DATA

YEAR	ADT	DHV	% D	% T	ADTT
2015	20	5	60	7.8	5
2035	20	5	60	9.6	5

20 year ESAL for flexible pavement from 2015 to 2035 : 4000
40 year ESAL for flexible pavement from 2015 to 2055 : 8000
Design Speed : 15 mph

PROJECT NAME: **FAIRFIELD**
PROJECT NUMBER: **BRO 1448 (41)**

FILE NAME:	s12j170excel.dgn	PLOT DATE:	8/18/2014
PROJECT LEADER:	R. YOUNG	DRAWN BY:	K. FRIEDLAND
DESIGNED BY:	R. KLINEFELTER	CHECKED BY:	J. SALVATORI
PRELIMINARY INFORMATION SHEET		SHEET 39	OF 69

GENERAL

1. ALL MATERIALS AND CONSTRUCTION SHALL CONFORM TO THE VERMONT AGENCY OF TRANSPORTATION 2011 STANDARD SPECIFICATIONS FOR CONSTRUCTION, THE 2012 AASHTO LRFD BRIDGE DESIGN SPECIFICATIONS, AND THEIR LATEST REVISIONS.

2. ALL PRECAST/PRESTRESSED CONCRETE ELEMENTS SHALL BE FABRICATED TO THE SPECIFIED DIMENSIONS AND ERECTED IN THE SPECIFIED LOCATIONS, ALL WITHIN TOLERANCES DEFINED ON THE PLANS AND IN THE PRECAST/PRESTRESSED CONCRETE INSTITUTE TOLERANCE MANUAL FOR PRECAST AND PRESTRESSED CONCRETE CONSTRUCTION, MNL 135-00, AND ITS LATEST REVISIONS.

3. ALL DIMENSIONS ARE HORIZONTAL OR VERTICAL, AND ARE GIVEN AT 68 DEGREES FAHRENHEIT, UNLESS NOTED OTHERWISE.

TRAFFIC CONTROL

4. THE CONTRACTOR SHALL BE RESPONSIBLE FOR SUPPLYING A SITE SPECIFIC TRAFFIC CONTROL PACKAGE IDENTIFYING CONSTRUCTION ACTIVITES BEFORE, DURING, AND AFTER THE BRIDGE CLOSURE PERIOD. THE CONTRACTOR SHALL SUBMIT A DETAILED TRAFFIC CONTROL PLAN TO THE PROJECT MANAGER FOR ALL STAGES OF CONSTRUCTION, FOR APPROVAL PER SUBSECTION 105.03. ALL COSTS SHALL BE INCLUDED IN ITEM 900.645, "SPECIAL PROVISION (TRAFFIC CONTROL, ALL-INCLUSIVE)(BRO 1448(41))". SEE SPECIAL PROVISIONS FOR ADDITIONAL INFORMATION.

5. ALL ITEMS REQUIRED TO IMPLEMENT THE CONTRACTOR'S TRAFFIC CONTROL PLAN WILL NOT BE PAID FOR DIRECTLY BUT WILL BE CONSIDERED INCLUDED IN THE BID PRICE FOR ITEM 900.645, "SPECIAL PROVISION (TRAFFIC CONTROL, ALL-INCLUSIVE)(BRO 1448(41))".

6. THE TOWN OF FAIRFIELD IS RESPONSIBLE FOR PROVIDING MEANS OF ACCESS FOR THE RESIDENTS OF ELM BROOK ROAD DURING THE BRIDGE CLOSURE PERIODS.

7. ALL SIGNING SHALL BE IN ACCORDANCE WITH THE LATEST EDITION OF THE MUTCD. FOR ADDITIONAL SIGNING INSTRUCTIONS SEE THE T SERIES OF THE STANDARDS. WHERE CONFLICTS EXIST, THE MUTCD SHALL GOVERN.

EARTHWORK

8. REMOVAL OF THE EXISTING STRUCTURE SHALL BE PAID FOR UNDER ITEM 529.15, "REMOVAL OF STRUCTURE". THIS WORK SHALL INCLUDE REMOVAL OF ANY PORTIONS OF THE EXISTING ABUTMENTS THAT FALL OUTSIDE THE LIMITS OF STRUCTURE EXCAVATION OR UNCLASSIFIED CHANNEL EXCAVATION.

9. THE "STONE FILL, TYPE III" UNDER THE BRIDGE AS SHOWN IN THE PLANS SHALL BE PLACED BEFORE THE PRESTRESSED SLABS ARE SET.

10. GEOTEXTILE MEETING THE REQUIREMENTS OF ITEM 649.11, "GEOTEXTILE FOR ROADBED SEPARATOR" SHALL BE USED TO WRAP THE GRANULAR BACKFILL FOR STRUCTURES MATERIAL BEHIND ABUTMENT #1 AS SHOWN ON THE PLANS. ALL COSTS ASSOCIATED WITH PLACING THE GEOTEXTILE AND WRAPPING THE BACKFILL MATERIAL SHALL BE INCLUDED IN THE BID PRICE FOR ITEM 649.11, "GEOTEXTILE FOR ROADBED SEPARATOR".

11. IF SHALLOW BEDROCK IS ENCOUNTERED IN FRONT OF ABUTMENT #1 PREVENTING INSTALLATION OF THE STONE FILL KEYWAY AS SHOWN ON THE PLANS, THE CONTRACTOR SHALL CONSTRUCT A STABLE BASE FOR THE STONE FILL SLOPE TO THE SATISFACTION OF THE ENGINEER. RESTACKING STONES FROM THE EXISTING ABUTMENT OR OTHER MEANS MAY BE USED TO PROVIDE A STABLE BASE. ALL COSTS ASSOCIATED WITH CONSTRUCTING A STABLE BASE FOR THE STONE FILL SLOPE, IF NECESSARY, SHALL BE INCLUDED IN THE BID PRICE FOR ITEM 613.12, STONE FILL, TYPE III.

CONCRETE AND REINFORCING STEEL

12. TEST BARS SHALL BE PROVIDED IN ACCORDANCE WITH THE "VERMONT AGENCY OF TRANSPORTATION MATERIAL SAMPLING MANUAL" AVAILABLE ON THE AGENCY WEBSITE. A MINIMUM OF TWO TEST SECTIONS ARE REQUIRED FOR EACH SIZE, BRAND, AND GRADE OR TYPE OF REINFORCING. SEE THE MANUAL FOR ACCEPTABLE DIMENSIONS OF TEST SECTIONS. ALL COSTS ASSOCIATED WITH PROVIDING BARS FOR TESTING SHALL BE INCLUDED IN THE BID PRICE FOR EACH 540.10, 900.640, "SPECIAL PROVISION, (PRESTRESSED CONCRETE SOLID SLABS)(21" x 48")", AND 900.645, "SPECIAL PROVISION, (CONTRACTOR-FABRICATED PRECAST CONCRETE STRUCTURE)" CONTRACT ITEM AS APPROPRIATE.

13. WATER REPELLENT, SILANE SHALL BE FURNISHED IN ACCORDANCE WITH SECTION 514 AND SHALL BE APPLIED TO ALL EXPOSED CONCRETE ON THE BRIDGE SUPERSTRUCTURE AND SUBSTRUCTURE, WITH THE EXCEPTION OF THE BOTTOM OF THE SLABS BETWEEN THE DRIP NOTCHES. ALL COSTS ASSOCIATED WITH APPLYING SILANE SHALL BE INCLUDED IN THE BID PRICE FOR EACH 540.10, 900.640, "SPECIAL PROVISION, (PRESTRESSED CONCRETE SOLID SLABS)(21" x 48")", AND 900.645, "SPECIAL PROVISION, (CONTRACTOR-FABRICATED PRECAST CONCRETE STRUCTURE)" CONTRACT ITEM AS APPROPRIATE.

14. CONCRETE FOR ABUTMENT PILE CAVITIES SHALL MEET THE REQUIREMENTS OF ITEM 900.608, "SPECIAL PROVISION (HIGH PERFORMANCE CONCRETE, RAPID SET)(FPQ)".

15. GROUT FOR SHEAR KEYS BETWEEN THE PRESTRESSED SLABS SHALL BE MORTAR, TYPE IV IN ACCORDANCE WITH SECTION 510 – PRESTRESSED CONCRETE. GROUT FOR ANCHOR BOLTS SHALL BE MORTAR, TYPE IV IN ACCORDANCE WITH SECTION 531 – BRIDGE BEARING DEVICES. THE CONTRACTOR SHALL SUBMIT A GROUTING PROCEDURE PROPOSAL TO THE ENGINEER, INCLUDING A PREMIX NAME BRAND FOR APPROVAL.

16. ALL REINFORCING STEEL SHALL BE DETAILED AND FABRICATED USING PROCEDURES AND TOLERANCES IN ACCORDANCE WITH APPLICABLE PUBLICATIONS OF THE "CONCRETE REINFORCING STEEL INSTITUTE".

17. ALL REINFORCING STEEL IN THE PRESTRESSED SLABS AND ABUTMENTS & WINGWALLS ABOVE THE BRIDGE SEAT SHALL MEET THE REQUIREMENTS FOR LEVEL I (EPOXY COATED) CORROSION RESISTANCE IN ACCORDANCE WITH SECTION 507.

18. REINFORCING STEEL IN THE ABUTMENTS & WINGWALLS BELOW THE BRIDGE SEAT SHALL MEET THE REQUIREMENTS FOR LEVEL I CORROSION RESISTANCE IN ACCORDANCE WITH SECTION 507.

19. CORRUGATED STEEL PIPES IN THE PRECAST ABUTMENTS FOR PILE CAVITIES AND ANCHOR BOLT CAVITIES SHALL MEET THE REQUIREMENTS OF SUBSECTION 711.01, BE COATED IN ACCORDANCE WITH AASHTO M 218, AND BE TYPE 1. ALL COSTS ASSOCIATED WITH PLACING THE CORRUGATED STEEL PIPES SHALL BE INCLUDED IN THE BID PRICE FOR EACH 540.10 AND 900.645, "SPECIAL PROVISION, (CONTRACTOR-FABRICATED PRECAST CONCRETE STRUCTURE)" CONTRACT ITEM AS APPROPRIATE.

20. CORRUGATED POST-TENSIONING DUCTS IN THE PRESTRESSED SLABS FOR ANCHOR BOLT CONNECTIONS SHALL BE CONSTRUCTED FROM EITHER POLYETHYLENE OR POLYPROPYLENE. THE DUCT SHALL HAVE A MINIMUM MATERIAL THICKNESS OF 0.080 IN. +/- 0.010 IN. AND SHALL HAVE A WHITE COATING ON THE OUTSIDE OR SHALL BE OF WHITE MATERIAL WITH ULTRAVIOLET STABILIZERS ADDED. POLYETHYLENE DUCT SHALL BE FABRICATED FROM RESINS MEETING OR EXCEEDING THE REQUIREMENTS OF ASTM D 3350 WITH A CELL CLASSIFICATION OF 345464A. POLY PROPYLENE DUCT SHALL BE FABRICATED FROM RESINS MEETING OR EXCEEDING THE REQUIREMENTS OF ASTM D 4101 WITH A CELL CLASSIFICATION RANGE OF PP0340B44544 TO PP0340B65884. ALL COSTS ASSOCIATED WITH PLACING THE DUCTS SHALL BE INCLUDED IN THE BID PRICE FOR ITEM 900.640, "SPECIAL PROVISION, (PRESTRESSED CONCRETE SOLID SLABS)(21" x 48")" AS APPROPRIATE.

PRECAST ABUTMENTS

21. CONCRETE COMPRESSIVE STRENGTH: f'c = 5 KSI.

22. THE CONTRACTOR IS ADVISED THAT ABUTMENT #1 MAY BE UNSTABLE UNTIL THE CONNECTIONS BETWEEN THE ABUTMENT AND PRESTRESSED SLABS ARE COMPLETE. IF ANY BACKFILL WILL BE PLACED ABOVE THE BOTTOM OF ABUTMENT BEFORE THE CONNECTIONS ARE COMPLETE, THE CONTRACTOR SHALL SUBMIT A SHORING PLAN FOR ABUTMENT #1 TO THE PROJECT MANAGER FOR APPROVAL. THE SHORING PLAN SHALL INCLUDE ASSOCIATED DETAILS, PROCEDURES, AND CALCULATIONS PREPARED, STAMPED, AND SIGNED BY A QUALIFIED LICENSED PROFESSIONAL ENGINEER. ALL COSTS ASSOCIATED WITH SHORING ABUTMENT #1, IF APPLICABLE, SHALL BE INCLUDED IN THE BID PRICE FOR ITEM 540.10, "PRECAST CONCRETE STRUCTURE (ABUTMENT#1)(BRO 1448(41))" AND 900.645, "SPECIAL PROVISION, (CONTRACTOR-FABRICATED PRECAST CONCRETE STRUCTURE)(ABUTMENT#1)(BRO 1448(41))".

23. PROPOSED SEQUENCE OF SUBSTRUCTURE CONSTRUCTION:
    a. DAILY BRIDGE CLOSURES:
        i. PRE-EXCAVATE HOLES FOR PILES.
        ii. BACKFILL HOLES WITH SAND.
    b. BRIDGE CLOSURE PERIOD:
        i. PREPARE AND GRADE FOUNDATION TO REQUIRED ELEVATION.
        ii. DRIVE PILES.
        iii. PLACE PRECAST ABUTMENTS.
        iv. INSTALL ANCHOR BOLTS AND SECURE IN FINAL POSITION.
        v. FILL ABUTMENT PILE CAVITIES WITH ITEM 900.608, "SPECIAL PROVISION (HIGH PERFORMANCE CONCRETE, RAPID SET)(FPQ)".
        vi. GROUT ANCHOR BOLTS IN ABUTMENT ANCHOR BOLT CAVITIES.
        vii. INSTALL TEMPORARY SHORING FOR ABUTMENT #1 BEFORE BACKFILLING (IF APPLICABLE).
        viii. THE PILE CAVITY CONCRETE SHALL ATTAIN A MINIMUM COMPRESSIVE STRENGTH OF 3.5 KSI BEFORE ABUTMENT #2 BACKFILL IS PLACED AND PRESTRESSED SLABS ARE ERECTED. SHORED ABUTMENTS MAY BE BACKFILLED IMMEDIATELY FOLLOWING PILE CAVITY CONCRETE PLACEMENT IF SHORING DESIGN ALLOWS.

24. ALTERNATE SEQUENCE OF CONSTRUCTION MAY BE SUBMITTED FOR APPROVAL BY THE PROJECT MANAGER.

PRESTRESSED SOLID SLABS

25. DESIGN VALUES:
    a. CONCRETE COMPRESSIVE STRENGTH: f'c = 8 KSI
    b. CONCRETE COMPRESSIVE STRENGTH AT RELEASE: f'ci = 6 KSI
    c. PRESTRESSING STRANDS: 0.6 INCH DIAMETER, 270 KSI, LOW-RELAXATION 7-WIRE STRANDS
    d. JACKING FORCE PER PRESTRESSING STRAND = 44 KIPS
    e. POST-TENSIONING STRANDS: 0.6 INCH DIAMETER, 270 KSI, LOW RELAXATION 7-WIRE STRANDS
    f. JACKING FORCE PER POST-TENSIONING STRAND = 47 KIPS
    g. THERE SHALL BE 2 STRANDS PER POST-TENSIONING DUCT.
    h. ASSUMED MODULUS OF ELASTICITY FOR THE STRAND IS 28,500 KSI.

26. DUE TO STABILITY CONCERNS AT THE ABUTMENTS DURING THE ERECTION OF THE SUPERSTRUCTURE, THE CONTRACTOR SHALL SUBMIT THE ERECTION PLAN A MINIMUM OF 30 WORKING DAYS PRIOR TO THE BRIDGE CLOSURE PERIOD. UNDER NO CIRCUMSTANCES SHALL A BRIDGE CLOSURE PERIOD BEGIN PRIOR TO HAVING AN ACCEPTED ERECTION PLAN.

27. THE METHOD OF FORMING FOR SUBSEQUENT POURS AFTER PLACING PRECAST/PRESTRESSED SUPERSTRUCTURE UNITS SHALL BE DETERMINED BY THE CONTRACTOR. THE CONTRACTOR IS ENCOURAGED TO WORK WITH THE FABRICATOR IF ADDITIONAL SUPPORTS MAY BE REQUIRED. IN NO CASE SHALL THE CONTRACTOR ATTACH ADDITIONAL FORM OR SCREED SUPPORTS BY DRILLING OR SIMILAR MEANS INTO ANY PRECAST/PRESTRESSED SUPERSTRUCTURE UNIT.

28. ALL POST-TENSIONING STRAND SHALL CONFORM TO THE REQUIREMENTS OF SECTION 510 – PRESTRESSED CONCRETE. PAYMENT FOR GALVANIZED ANCHOR ASSEMBLIES, DUCTS, AND POST-TENSIONING STRANDS SHALL BE INCLUDED UNDER ITEM 900.640, "SPECIAL PROVISION, (PRESTRESSED CONCRETE SOLID SLABS)(21" x 48")".

29. PROPOSED SEQUENCE OF SUPERSTRUCTURE CONSTRUCTION:
    a. LAY OUT WORKING LINES THE ENTIRE WIDTH OF THE BRIDGE ALONG CENTERLINE OF BEARING, MEASURED FROM A SINGLE WORKING POINT. THE WORKING LINES SHALL BE BASED ON THE NOMINAL PRESTRESSED SLAB WIDTHS.
    b. VERIFY THE BRIDGE SEAT ELEVATIONS AND TAKE CORRECTIVE ACTION IF NECESSARY.
    c. POWER WASH ALL SURFACES THAT WILL BE IN CONTACT WITH GROUT.
    d. INSTALL BEARINGS.
    e. ERECT THE PRESTRESSED SLABS TO FIT WITHIN THE WORKING LINES.
    f. ADJUST THE EXTERIOR SLAB SO THAT THE FASCIA FITS SNUG AGAINST THE CORK ON INTERIOR OF CHEEK WALL.
    g. INSTALL HARDWOOD WEDGES BETWEEN ADJACENT SLABS TO MAINTAIN PROPER JOINT OPENING (A MINIMUM OF ONE WEDGE AT EACH TRANSVERSE POST-TENSIONING LOCATION).
    h. INSTALL BACKER ROD BELOW THE BOTTOM OF THE KEYWAY.
    i. INSTALL POST-TENSIONING STRANDS AND TENSION TO 3 KIPS TO REMOVE SAG AND SEAT CHUCK.
    j. PUMP GROUT FROM LOW END OF BRIDGE SEAT THROUGH ANCHOR BOLT DUCTS CLOSEST TO THE FASCIA TO FILL VOID BETWEEN BRIDGE SEAT AND BOTTOM OF PRESTRESSED SLABS. PUMP GROUT UNTIL ALL ANCHOR BOLT DUCTS ARE FULL.
    k. INSTALL ANCHOR PLATES, WASHERS AND NUTS FOR ANCHOR BOLTS.
    l. GROUT SHEAR KEYS.
    m. FULLY TENSION TRANSVERSE TENDONS. POST-TENSIONING OF TRANSVERSE TENDONS WILL BE PERMITTED ONCE SHEAR KEY GROUT HAS REACHED A MINIMUM COMPRESSIVE STRENGTH OF 600 PSI. THE GROUT NEED NOT BE CURED FOR THREE DAYS PRIOR TO COMMENCING OF POST-TENSIONING. THE CONTRACTOR SHALL MOLD AND CURE A SUFFICIENT NUMBER OF CUBES DURING THE GROUT PLACEMENT FOR TESTING.

30. ALTERNATE SEQUENCE OF CONSTRUCTION MAY BE SUBMITTED FOR APPROVAL BY THE PROJECT MANAGER.

H-PILES

31. THE PILES SHALL BE HP 12x84.

32. TO PREVENT DAMAGE TO THE PILES, PILE SHOES ARE REQUIRED AND SHALL CONFORM TO SUBSECTION 505.04 (f).

33. ALL PILE LOCATIONS SHALL BE PRE-EXCAVATED WITH A MINIMUM PENETRATION OF 3 FEET INTO COMPETENT BEDROCK. THIS WORK SHALL BE DONE DURING DAILY BRIDGE CLOSURES IN A 14 DAY PERIOD PRIOR TO THE BRIDGE CLOSURE PERIOD.

34. IN ORDER TO BE CONSIDERED PART OF THE 3 FOOT PENETRATION INTO COMPETENT BEDROCK, THE HOLES SHALL BE BETWEEN 24 AND 30 INCHES IN DIAMETER. THE ENTIRE PRE-EXCAVATED HOLE SHALL BE BACKFILLED WITH SAND CONFORMING TO THE REQUIREMENTS OF SUBSECTION 703.03.

35. THE PILES SHALL BE DRIVEN TO A NOMINAL AXIAL RESISTANCE OF 253 KIPS. DYNAMIC PILE LOADING TESTS ARE NOT REQUIRED.

36. THE TOPS OF THE PILES AFTER DRIVING SHALL NOT VARY FROM THE POSITION SHOWN ON THE PLANS BY MORE THAN 3 INCHES. THE PILE ORIENTATION SHALL NOT VARY BY MORE THAN 5 DEGREES. THE CONTRACTOR SHALL DEMONSTRATE TO THE SATISFACTION OF THE ENGINEER HOW THE TOLERANCES WILL BE MET. THESE MEASURES SHALL BE DEMONSTRATED IN A SUBMITTAL TO BE ACCEPTED BEFORE PILE DRIVING COMMENCES.

37. FOR ESTIMATING PURPOSES, THE PILE TIP ELEVATIONS WERE ASSUMED AS SHOWN ON THE BORING LOGS. THE ACTUAL IN PLACE LENGTHS MAY VARY.

MISCELLANEOUS

38. EXISTING CONDITIONS SHEET HAS BEEN INCLUDED FOR THE CONTRACTOR TO USE FOR SUBMITTALS.

STATE OF VERMONT
AGENCY OF TRANSPORTATION

QUANTITY SHEET 1

SUMMARY OF ESTIMATED QUANTITIES					TOTALS		DESCRIPTIONS			
ROADWAY	EROSION CONTROL	BRIDGE	FULL C.E. ITEMS		GRAND TOTAL	FINAL	UNIT	ITEMS	ITEM NUMBER	ROUND
1					1		LS	CLEARING AND GRUBBING, INCLUDING INDIVIDUAL TREES AND STUMPS (BRO 1448(41))	201.10	
250					250		CY	COMMON EXCAVATION	203.15	
		5			5		CY	SOLID ROCK EXCAVATION	203.16	
		340			340		CY	UNCLASSIFIED CHANNEL EXCAVATION	203.27	
1					1		CY	TRENCH EXCAVATION OF EARTH, EXPLORATORY (N.A.B.I.)	204.22	
		100			100		CY	STRUCTURE EXCAVATION	204.25	
		60			60		CY	GRANULAR BACKFILL FOR STRUCTURES	204.30	
180					180		CY	SUBBASE OF CRUSHED GRAVEL, COARSE GRADED	301.25	
90					90		CY	AGGREGATE SURFACE COURSE	401.10	
		1			1		LS	FURNISHING EQUIPMENT FOR DRIVING PILING (BRO 1448(41))	504.10	
		100			100		LF	STEEL PILING, HP 12 X 84	505.165	
		1800			1800		LB	STRUCTURAL STEEL (FPQ)	506.60	
		162			162		LF	GROUTING SHEAR KEYS	510.24	
		112.5			112.5		LF	BRIDGE RAILING, GALVANIZED HDSB/FASCIA MOUNTED/STEEL TUBING	525.44	
		1			1		EACH	REMOVAL OF STRUCTURE (705 SF - EST.)	529.15	
		16			16		EACH	BEARING DEVICE ASSEMBLY, PLAIN ELASTOMERIC PAD	531.16	
								BEGIN OPTION BB		
		1			1		LS	PRECAST CONCRETE STRUCTURE (ABUTMENT #1)(BRO 1448(41))	540.10	
		1			1		LS	SPECIAL PROVISION (CONTRACTOR-FABRICATED PRECAST CONCRETE STRUCTURE)(ABUTMENT #1)(BRO 1448(41))	900.645	
								END OPTION BB		
								BEGIN OPTION DD		
		1			1		LS	PRECAST CONCRETE STRUCTURE (ABUTMENT #2)(BRO 1448(41))	540.10	
		1			1		LS	SPECIAL PROVISION (CONTRACTOR-FABRICATED PRECAST CONCRETE STRUCTURE)(ABUTMENT #2)(BRO 1448(41))	900.645	
								END OPTION DD		
	1				1		TON	DUST AND ICE CONTROL WITH CALCIUM CHLORIDE	609.15	
		230			230		CY	STONE FILL, TYPE III	613.12	
58					58		LF	STEEL BEAM GUARDRAIL, GALVANIZED	621.20	
4					4		EACH	ANCHOR FOR STEEL BEAM RAIL	621.60	
4					4		EACH	GUARDRAIL APPROACH SECTION, GALV HD STEEL BEAM	621.737	
93					93		LF	REMOVAL AND DISPOSAL OF GUARDRAIL	621.80	
			0.5		0.5		LS	FIELD OFFICE, ENGINEERS	631.10	
			0.5		0.5		LS	TESTING EQUIPMENT, CONCRETE	631.16	
			1500		1500		DL	FIELD OFFICE TELEPHONE (N.A.B.I.)	631.26	
0.5					0.5		LS	MOBILIZATION/DEMOBILIZATION	635.11	
160					160		SY	GEOTEXTILE FOR ROADBED SEPARATOR	649.11	
		280			280		SY	GEOTEXTILE UNDER STONE FILL	649.31	
	180				180		SY	GEOTEXTILE FOR SILT FENCE, WOVEN WIRE REINFORCED	649.515	
	80				80		SY	GEOTEXTILE FOR FILTER CURTAIN	649.61	
	5				5		LB	SEED	651.15	

DETAILED SUMMARY OF QUANTITIES

QUANTITIES	UNIT	ITEMS
		EARTHWORK SUMMARY
250	CY	COMMON EXCAVATION (250*1.0)
255	CY	UNCLASSIFIED EXCAVATION (340*0.75)
75	CY	STRUCTURE EXCAVATION (100*0.75)
580	CY	SUBTOTAL
20	CY	ROUNDING
600	CY	TOTAL FILL AVAILABLE
0	CY	TOTAL FILL REQUIRED
600	CY	TOTAL WASTE

PROJECT NAME: FAIRFIELD
PROJECT NUMBER: BRO 1448(41)

FILE NAME: s12j170qs.dgn
PROJECT LEADER: R. YOUNG
DESIGNED BY: R. KLINEFELTER
QUANTITY SHEET 1

PLOT DATE: 11-SEP-2014
DRAWN BY: K. FRIEDLAND
CHECKED BY: J. SALVATORI
SHEET 41 OF 69

STATE OF VERMONT
AGENCY OF TRANSPORTATION

QUANTITY SHEET 2

SUMMARY OF ESTIMATED QUANTITIES / TOTALS / DESCRIPTIONS

ROADWAY	EROSION CONTROL	BRIDGE	FULL C.E. ITEMS	GRAND TOTAL	FINAL	UNIT	ITEMS	ITEM NUMBER	ROUND
	30			30		LB	FERTILIZER	651.18	
	1			1		TON	AGRICULTURAL LIMESTONE	651.20	
	1			1		TON	HAY MULCH	651.25	
	25			25		CY	TOPSOIL	651.35	
		70		70		SY	GRUBBING MATERIAL	651.40	
	1			1		LS	EPSC PLAN (BRO 1448(41))	652.10	
	20			20		HR	MONITORING EPSC PLAN	652.20	
	1			1		LU	MAINTENANCE OF EPSC PLAN (N.A.B.I.) (BRO 1448(41))	652.30	
	18			18		CY	VEHICLE TRACKING PAD	653.35	
	480			480		LF	BARRIER FENCE	653.50	
0.66				0.66		SF	TRAFFIC SIGNS, TYPE A	675.20	
30				30		LF	SQUARE TUBE SIGN POST AND ANCHOR	675.341	
2				2		EACH	REMOVING SIGNS	675.50	
2				2		EACH	ERECTING SALVAGED SIGNS	675.60	
4				4		EACH	DELINEATOR WITH STEEL POST	676.10	
		4		4		CY	SPECIAL PROVISION (HIGH PERFORMANCE CONCRETE, RAPID SET)(FPQ)	900.608	
		50		50		LF	SPECIAL PROVISION (PRE-EXCAVATION OF INTEGRAL ABUTMENT PILES, EARTH)	900.640	
		30		30		LF	SPECIAL PROVISION (PRE-EXCAVATION OF INTEGRAL ABUTMENT PILES, ROCK)	900.640	
		216		216		LF	SPECIAL PROVISION (PRESTRESSED CONCRETE SOLID SLABS)(21" x 48")	900.640	
0.5				0.5		LS	SPECIAL PROVISION (CPM SCHEDULE)	900.645	
1				1		LS	SPECIAL PROVISION (TRAFFIC CONTROL, ALL-INCLUSIVE)(BRO 1448(41))	900.645	

DETAILED SUMMARY OF QUANTITIES

QUANTITIES	UNIT	ITEMS

PROJECT NAME: FAIRFIELD
PROJECT NUMBER: BRO 1448(41)

FILE NAME: s12j170qs.dgn
PROJECT LEADER: R. YOUNG
DESIGNED BY: R. KLINEFELTER
QUANTITY SHEET 2

PLOT DATE: 18-AUG-2014
DRAWN BY: K. FRIEDLAND
CHECKED BY: J. SALVATORI

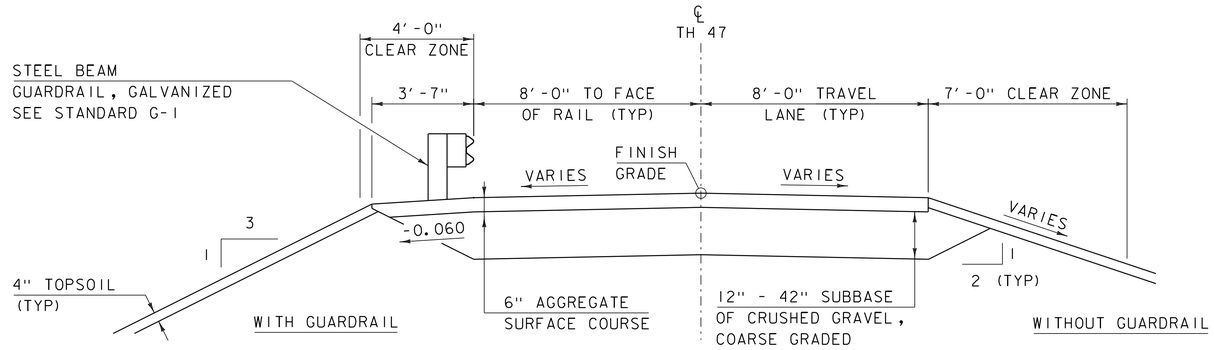

ROADWAY TYPICAL SECTION

SCALE 3/8" = 1'-0"

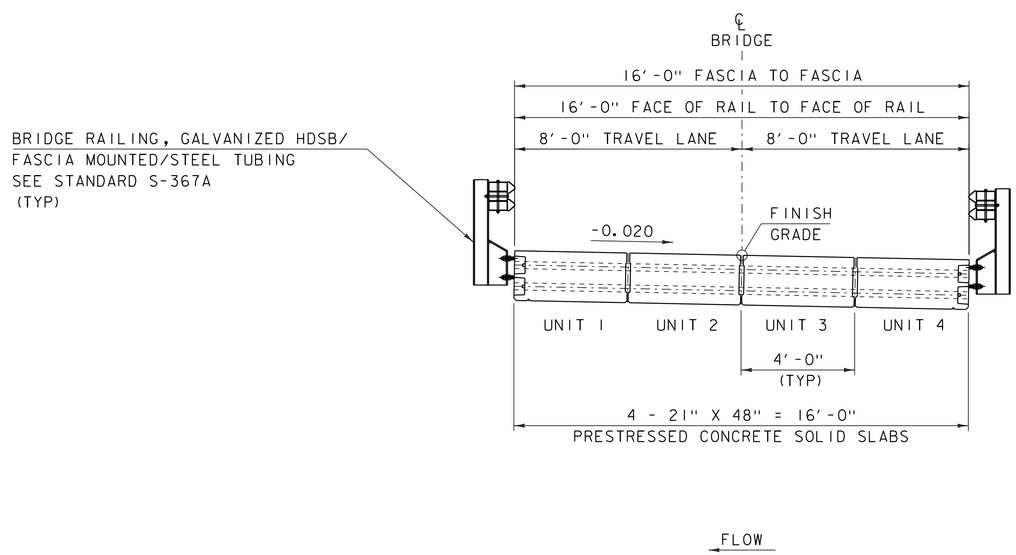

BRIDGE TYPICAL SECTION

SCALE 3/8" = 1'-0"

MATERIAL TOLERANCES
(IF USED ON PROJECT)

SURFACE	
- PAVEMENT (TOTAL THICKNESS)	+/- 1/4"
- AGGREGATE SURFACE COURSE	+/- 1/2"
SUBBASE	+/- 1"
SAND BORROWS	+/- 1"

PROJECT NAME: FAIRFIELD
PROJECT NUMBER: BRO 1448(41)

FILE NAME: s12j170typ.dgn
PROJECT LEADER: R. YOUNG
DESIGNED BY: R. KLINEFELTER
TYPICAL SECTIONS 1

PLOT DATE: 18-AUG-2014
DRAWN BY: K. FRIEDLAND
CHECKED BY: J. SALVATORI
SHEET 43 OF 69

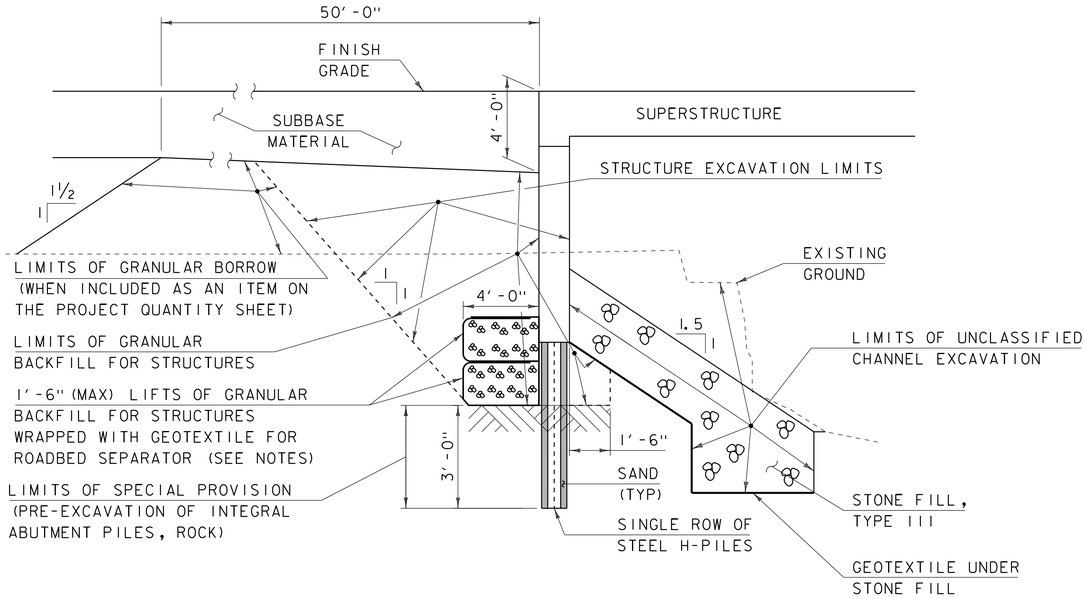

NOTES:

1) WRAPPED MATERIAL BEHIND ABUTMENT SHALL REST ON BEDROCK AND BE PLACED IN LEVEL LIFTS. IF SLOPING BEDROCK IS ENCOUNTERED, LIFTS SHALL BE STEPPED AS NEEDED.

2) WRAPPED MATERIAL SHALL EXTEND A MINIMUM OF 1'-0" ABOVE THE BOTTOM OF ABUTMENT AND EXTEND THE FULL WIDTH OF THE ABUTMENT.

ABUTMENT 1 TYPICAL INTEGRAL ABUTMENT SECTION

(NOT TO SCALE)

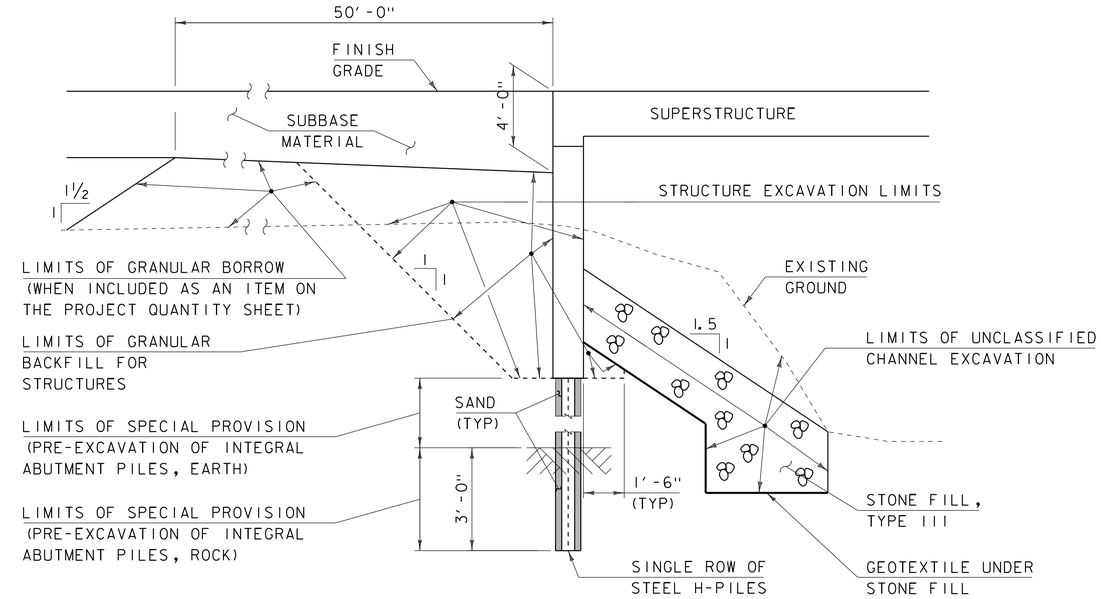

ABUTMENT 2 TYPICAL INTEGRAL ABUTMENT SECTION

(NOT TO SCALE)

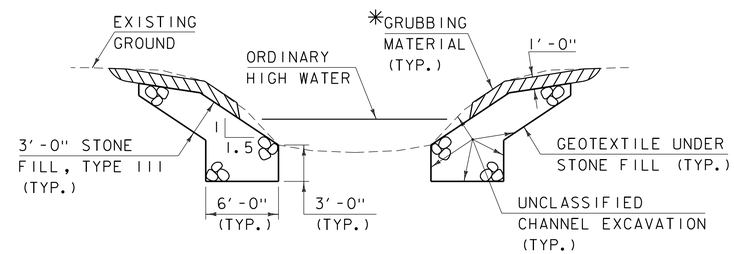

TYPICAL CHANNEL SECTION

(NOT TO SCALE)

*GRUBBING MATERIAL SHALL NOT BE PLACED ON THE STONE FILL IN THE AREA UNDER THE BRIDGE. WHENEVER CHANNEL SLOPE INTERSECTS ROADWAY SUBBASE, GRUBBING MATERIAL SHALL BEGIN AT THE BOTTOM OF SUBBASE.

PROJECT NAME: FAIRFIELD	
PROJECT NUMBER: BRO 1448(41)	
FILE NAME: s12j170typ.dgn	PLOT DATE: 10-SEP-2014
PROJECT LEADER: R. YOUNG	DRAWN BY: K. FRIEDLAND
DESIGNED BY: R. KLINEFELTER	CHECKED BY: J. SALVATORI
TYPICAL SECTIONS 2	SHEET 44 OF 69

GPS CONTROL POINTS

HVCTRL #1

ELM BROOK
NORTH = 835145.869
EAST = 1543642.073
ELEV. = 402.610

GENERAL LOCATION, FAIRFIELD, VT., IN EAST FAIRFIELD. TO REACH FROM THE INTERSECTION VT ROUTE 36 AND VT ROUTE 108 IN BAKERSFIELD, GO WEST ALONG VT ROUTE 36 FOR 3.0 MI TO THE INTERSECTION OF MILL STREET LEFT. CONTINUE STRAIGHT AHEAD AND GO NORTHWEST ALONG VT ROUTE 36 FOR 0.7 MI TO THE INTERSECTION OF ELM BROOK ROAD LEFT. TURN LEFT AND GO NORTHWEST AND THEN SOUTHWEST ALONG ELM BROOK ROAD FOR 0.2 MI TO THE SITE OF THE MARK ON THE LEFT. THE MARK IS SET 2 CM BELOW GROUND SURFACE IN THE TOP OF A 30 CM DIAMETER CONCRETE MONUMENT POURED 1.2 M DEEP. IT IS 3.4 M EAST OF AND ABOUT 0.2 M LOWER THAN THE CENTERLINE OF ELM BROOK ROAD, 38.7 M SOUTH SOUTHWEST OF POLE NO 201/1, AND 31.0 M NORTH NORTHWEST OF POLE NO 2 AND A FIBERGLASS WITNESS POST.

HVCTRL #2

ELMBROOK AZ MK
NORTH = 833823.024
EAST = 1546286.569
ELEV. = 398.720

GENERAL LOCATION, FAIRFIELD, VT., IN EAST FAIRFIELD. OWNERSHIP, SHANNON MITCHELL, 9240 VT ROUTE 36, EAST FAIRFIELD, VT 05448. TO REACH FROM THE INTERSECTION VT ROUTE 36 AND VT ROUTE 108 IN BAKERSFIELD, GO WEST ALONG VT ROUTE 36 FOR 3.0 MI TO THE INTERSECTION OF MILL STREET LEFT. CONTINUE STRAIGHT AHEAD AND GO NORTHWEST ALONG VT ROUTE 36 FOR 0.15 MI TO THE SITE OF THE MARK ON THE LEFT. THE MARK IS SET IN THE TOP OF A MASSIVE ROCK OUTCROP JUST NORTHWEST OF HOUSE NO 9240. IT IS 14.7 M SOUTHWEST OF AND ABOUT 4 M HIGHER THAN THE CENTERLINE OF VT ROUTE 36, 10.9 M NORTHWEST OF THE NORTH CORNER OF HOUSE NO 9240, 12.0 M NORTH OF THE WEST CORNER OF THE HOUSE, 2.1 M NORTH NORTHEAST OF A 14 MM DIAMETER STEEL BOLT WITH SQUARE NUT SET IN THE TOP OF THE OUTCROP, AND 3.6 M WEST SOUTHWEST OF THE WEST CORNER OF A GARDEN SHED.

TRAVERSE TIES

HVCTRL #3

NORTH = 835608.228
EAST = 1544118.760
ELEV. = 378.248

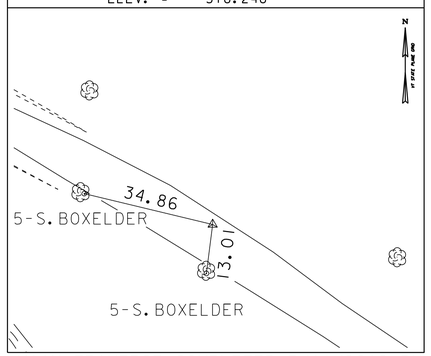

HVCTRL #4

NORTH = 835545.864
EAST = 1543760.945
ELEV. = 393.952

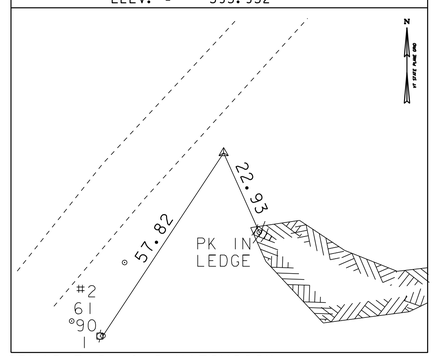

*MAIN TRAVERSE COMPLETED 3/11/2012 BY L. ORVIS P.C. & G. HITCHCOCK

NORTH =	
EAST =	
ELEV. =	

NORTH =	
EAST =	
ELEV. =	

NORTH =	
EAST =	
ELEV. =	

DATUM	
VERTICAL	NAVD 88
HORIZONTAL	NAD 83 (07)
ADJUSTMENT	COMPASS

PROJECT NAME: FAIRFIELD
PROJECT NUMBER: BRO 1448 (41)

FILE NAME: x12j170ti.dgn
PROJECT LEADER: R. YOUNG
DESIGNED BY: R. KLINEFELTER
TIE SHEET

PLOT DATE: 18-AUG-2014
DRAWN BY: K. FRIEDLAND
CHECKED BY: R. KLINEFELTER
SHEET 45 OF 69

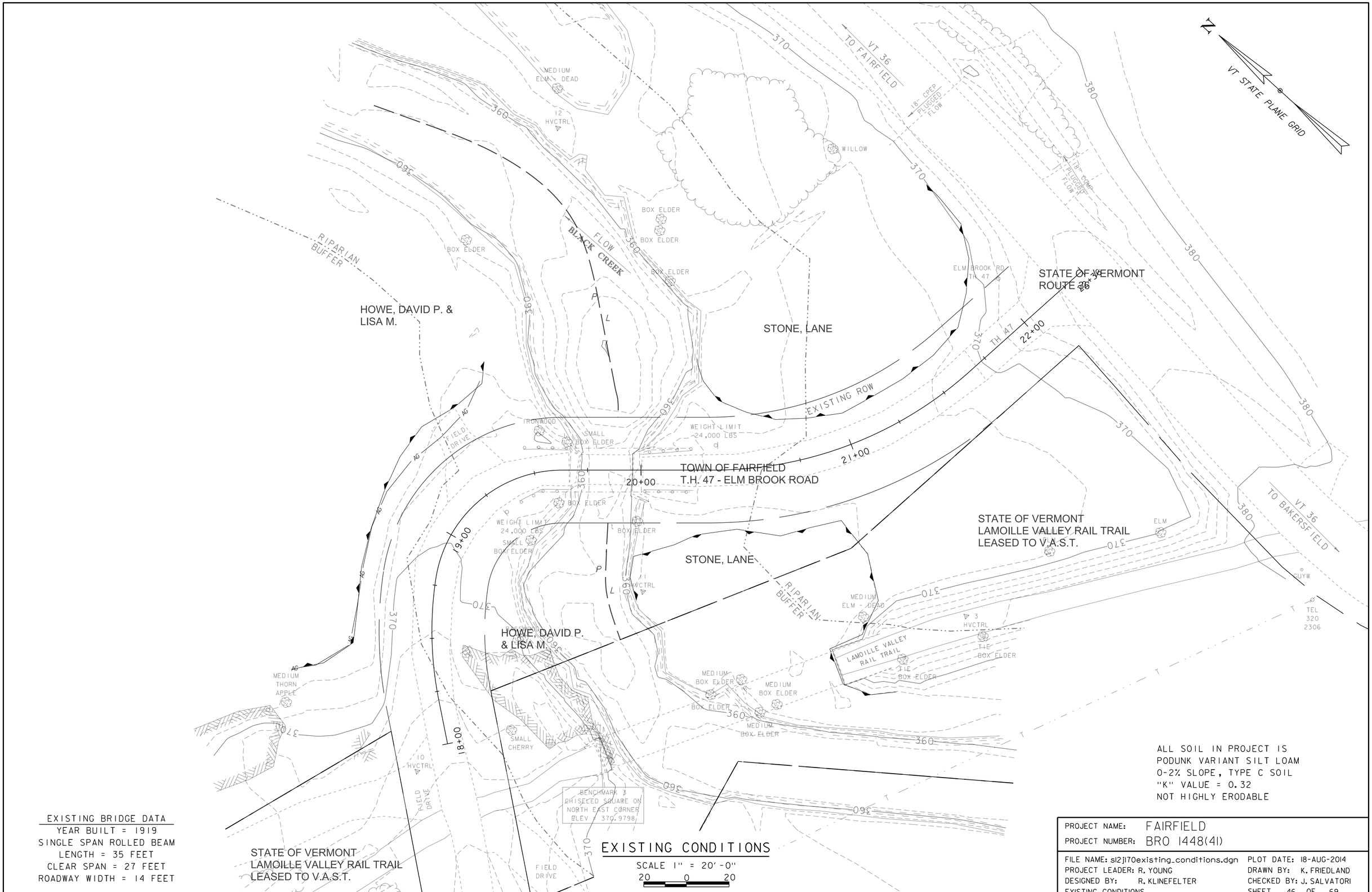

ALL SOIL IN PROJECT IS
PODUNK VARIANT SILT LOAM
0-2% SLOPE, TYPE C SOIL
"K" VALUE = 0.32
NOT HIGHLY ERODABLE

EXISTING BRIDGE DATA
YEAR BUILT = 1919
SINGLE SPAN ROLLED BEAM
LENGTH = 35 FEET
CLEAR SPAN = 27 FEET
ROADWAY WIDTH = 14 FEET

EXISTING CONDITIONS

SCALE 1" = 20'-0"
20 0 20

PROJECT NAME: FAIRFIELD	
PROJECT NUMBER: BRO 1448(41)	
FILE NAME: s12j170existing_conditions.dgn	PLOT DATE: 18-AUG-2014
PROJECT LEADER: R. YOUNG	DRAWN BY: K. FRIEDLAND
DESIGNED BY: R. KLINEFELTER	CHECKED BY: J. SALVATORI
EXISTING CONDITIONS	SHEET 46 OF 69

MILEMARKER, STATION, OR SIGN NUMBER	SIGN LEGEND	SIGN DIMENSIONS WIDTH (in)	SIGN DIMENSIONS HEIGHT (in)	NEW SIGN "A"	EXIST POST RETAIN	EXIST POST SALVAGE	NEW SIGN POSTS NO. OF POSTS	SQUARE STEEL (in) 1.75 lb/ft 1.88	2.0 lb/ft 2.42	2.5 lb/ft 3.35	ANCHOR	SLEEVE	REMARKS	SIGN DETAIL DETAIL ON SHEET NUMBER	SIGN DETAIL STD. SHEET NUMBER
19+50.00 RT	BRIDGE 46	6	8	0.33			1		15		X		VD-701		T-42
20+20.00 LT	BRIDGE 46	6	8	0.33			1		15		X		VD-701		T-42
								FT	FT 30	FT		EA			
FINAL POST LENGTHS ARE TO BE DETERMINED IN THE FIELD. POST SIZES ARE COMPUTED BASED ON INFORMATION FURNISHED ON THE STANDARD SHEETS AND THE VTRANS "SIGN POST DESIGN GUIDELINE."		TOTALS		SF 0.66				FT 30					N = NEW R = REMOVE & SALVAGE SHS = STANDARD HIGHWAY SIGNS (MUTCD)		

NOTE:

1) BRIDGE NUMBER PLAQUE AND LEGAL LOAD LIMIT SIGN SHALL BE MOUNTED ON THE SAME POST.

CURVE (1)
DELTA = 19°50′18″
D = 34°56′11″
R = 164.00′
T = 28.68′
L = 56.78′
E = 2.49′

CURVE (2)
DELTA = 81°30′38″
D = 95°29′35″
R = 60.00′
T = 51.71′
L = 85.36′
E = 19.21′

CURVE (3)
DELTA = 41°49′53″
D = 31°49′52″
R = 180.00′
T = 68.79′
L = 131.42′
E = 12.70′

CONSTRUCT DRIVE
STA 19+05.00 LT - 19+46.00 LT
REMOVAL AND DISPOSAL OF GUARDRAIL
STA 19+48.00 LT - 19+66.00 LT
STA 19+38.00 RT - 19+66.00 RT
STA 20+00.00 LT - 20+24.00 LT
STA 20+01.00 RT - 20+24.00 RT
REMOVING SIGNS
STA 19+29.00 RT
STA 20+35.00 LT
ERECTING SALVAGED SIGNS
STA 19+50.00 RT
STA 20+20.00 LT

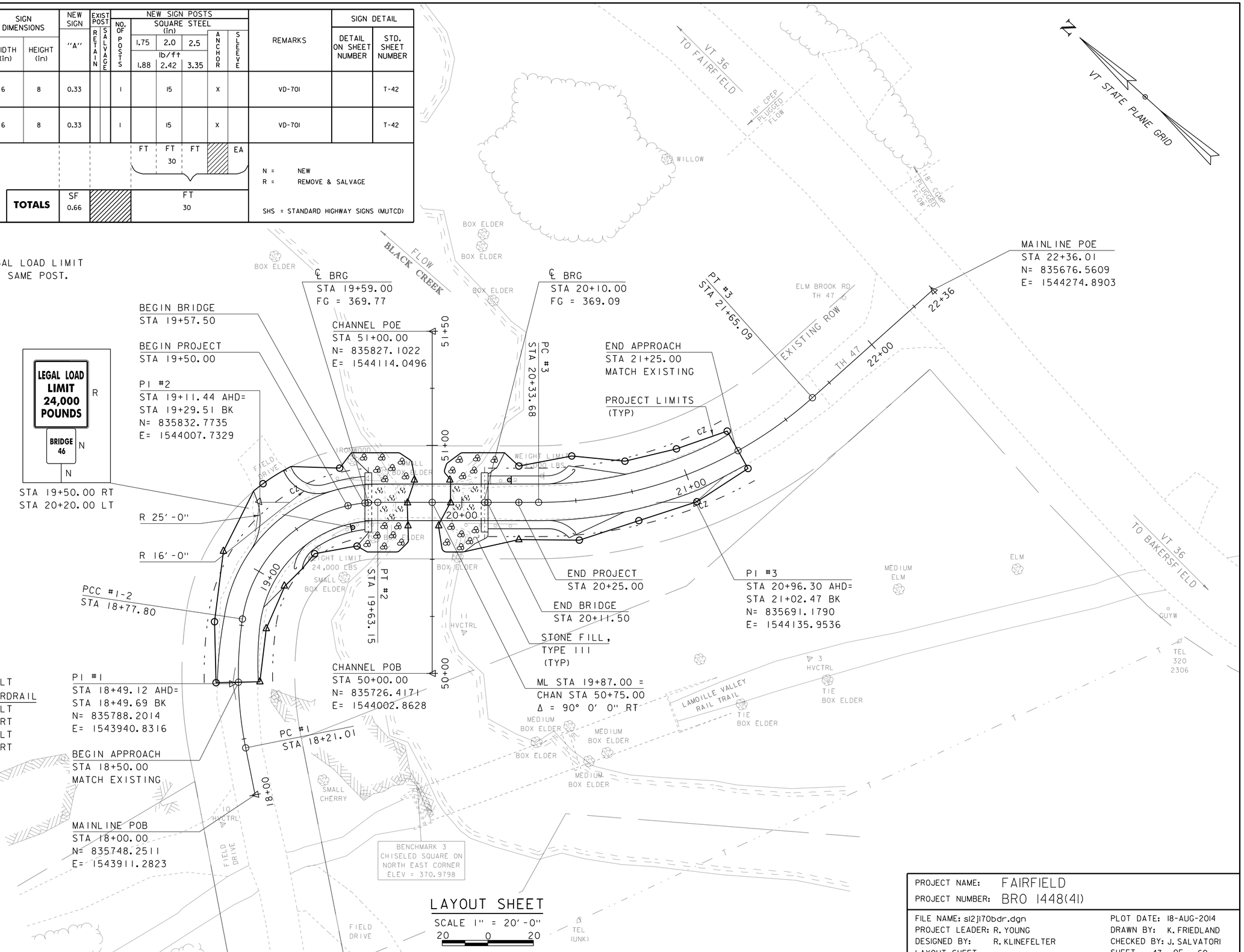

LAYOUT SHEET
SCALE 1" = 20′-0"
20 0 20

PROJECT NAME: FAIRFIELD	
PROJECT NUMBER: BRO 1448(41)	
FILE NAME: s121170bdr.dgn	PLOT DATE: 18-AUG-2014
PROJECT LEADER: R. YOUNG	DRAWN BY: K. FRIEDLAND
DESIGNED BY: R. KLINEFELTER	CHECKED BY: J. SALVATORI
LAYOUT SHEET	SHEET 47 OF 69

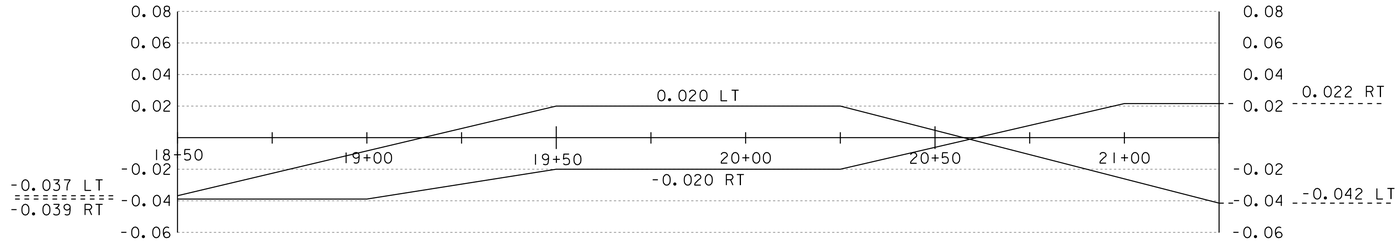

BANKING DIAGRAM

HORIZONTAL SCALE: 1" = 20'-0"
VERTICAL SCALE: NOT TO SCALE

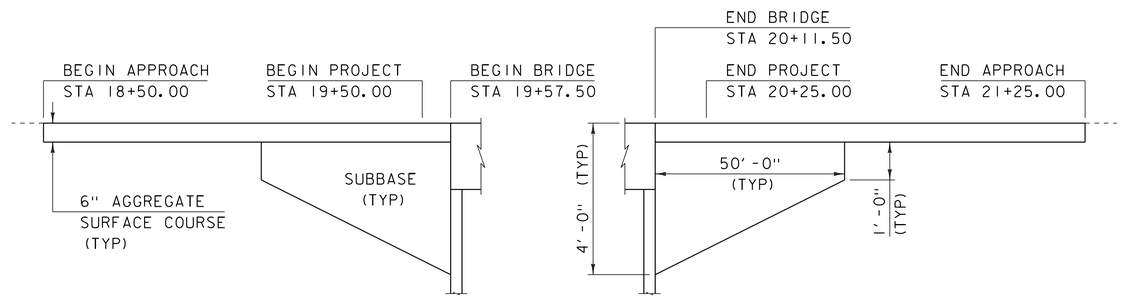

MATERIAL TRANSITION

HORIZONTAL SCALE 1"=20'
NO VERTICAL SCALE

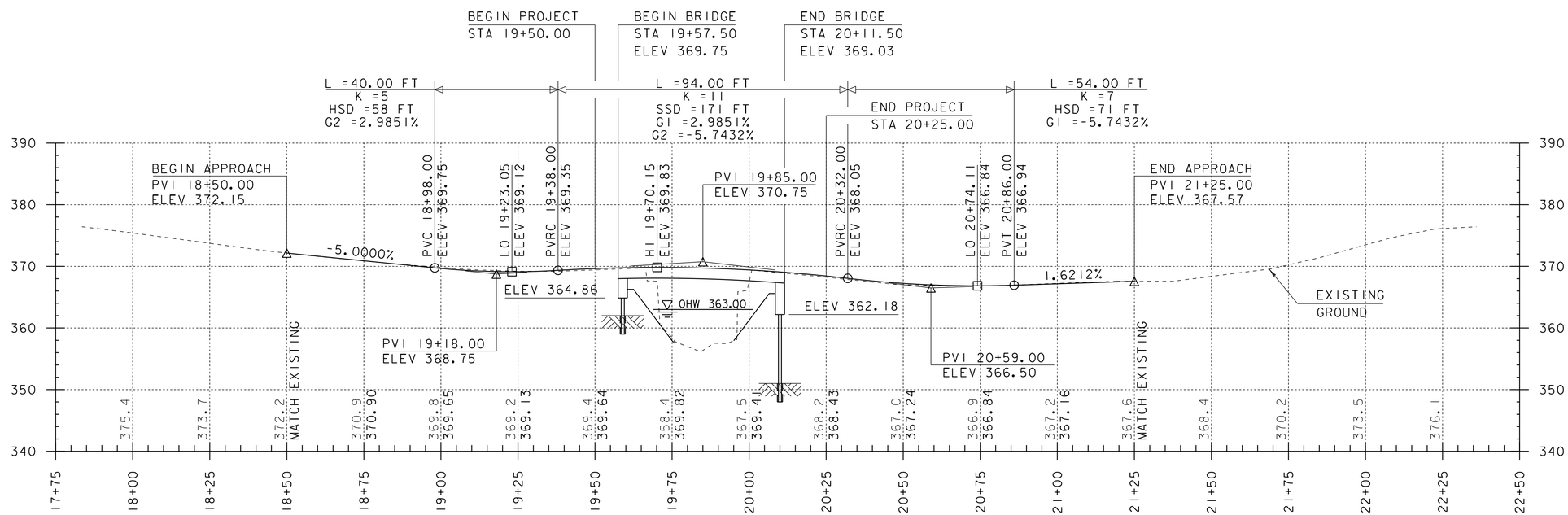

TH 47 PROFILE

HORIZONTAL SCALE 1"=20'
VERTICAL SCALE 1"=10'

THE GRADES SHOWN TO THE NEAREST TENTH ARE THE ORIGINAL GROUND ELEVATIONS ALONG THE PROPOSED ALIGNMENT.

THE GRADES SHOWN TO THE NEAREST HUNDREDTH ARE THE FINISH GRADES ALONG THE PROPOSED ALIGNMENT.

PROJECT NAME: FAIRFIELD	
PROJECT NUMBER: BRO 1448(41)	
FILE NAME: s12j170pro.dgn	PLOT DATE: 18-AUG-2014
PROJECT LEADER: R. YOUNG	DRAWN BY: K. FRIEDLAND
DESIGNED BY: R. KLINEFELTER	CHECKED BY: J. SALVATORI
MAINLINE PROFILE AND BANKING DIAGRAM	SHEET 48 OF 69

NOTES:

1. THE CONTRACTOR SHALL BE RESPONSIBLE FOR SIGNS AND BARRICADES SHOWN ON THIS SHEET AND SIDE ROAD APPROACH SIGNING ON VT ROUTE 36. THEY SHALL BE PAID FOR UNDER ITEM 900.645, "SPECIAL PROVISION (TRAFFIC CONTROL, ALL-INCLUSIVE)".

2. TEMPORARY TRAFFIC BARRIER AT EACH END OF THE PROJECT SHALL BE FURNISHED IN ACCORDANCE WITH SECTION 621 AND PAYMENT SHALL BE CONSIDERED INCIDENTAL TO PAY ITEM 900.645, "SPECIAL PROVISION (TRAFFIC CONTROL, ALL-INCLUSIVE)".

3. SIDE ROAD APPROACH SIGNING SHALL BE INSTALLED ON VT 36 IN ACCORDANCE WITH STANDARD T-10.

* = OMIT SIGNS BETWEEN BRIDGE AND VT 36.

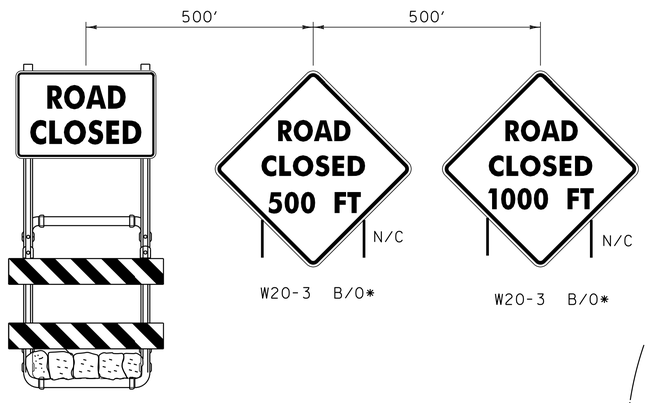

W20-3 B/O*

W20-3 B/O*

R11-2D B/W SIGN MOUNTED ON TYPE III BARRICADE (MODIFIED)

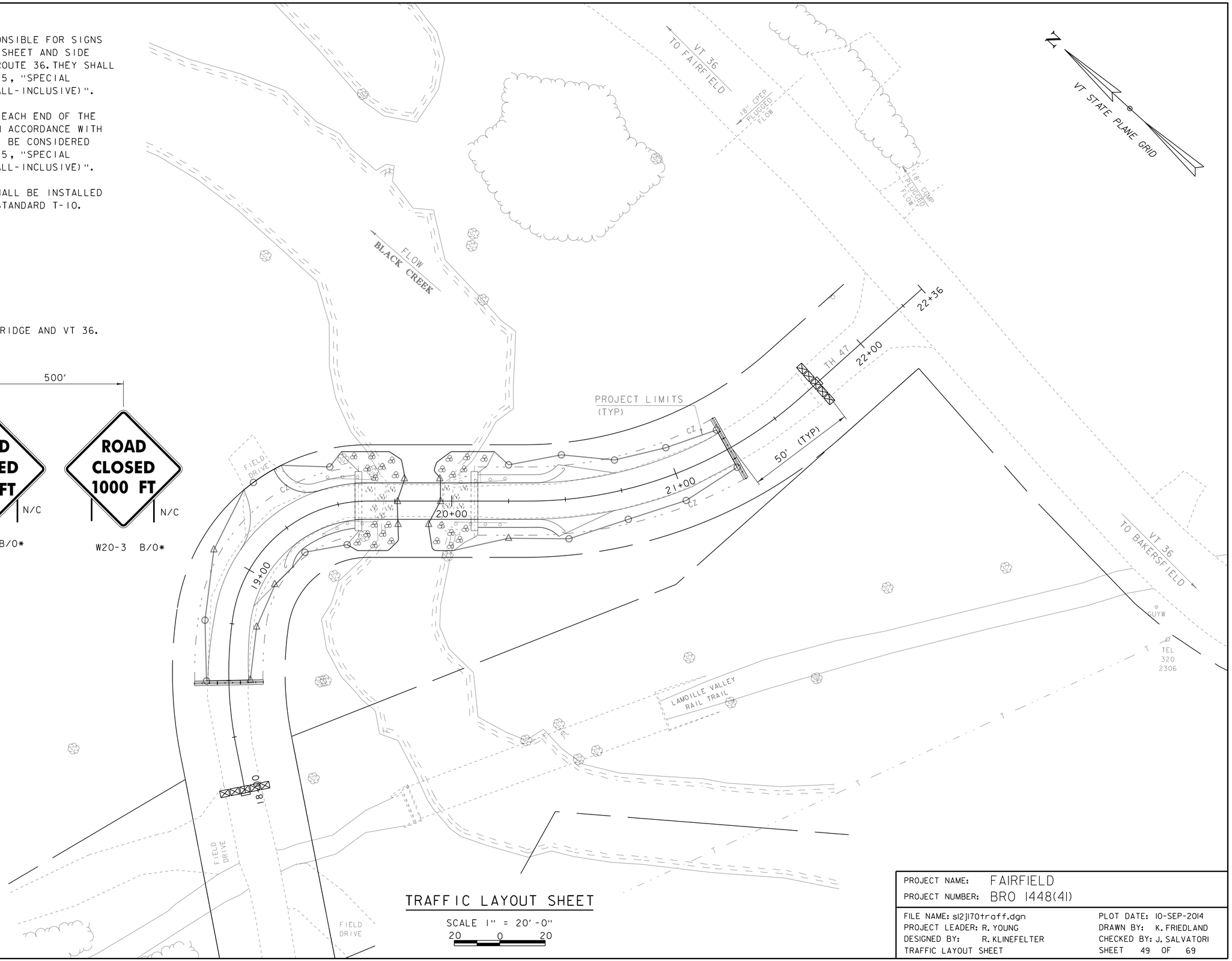

LEGEND
N/C - NEW/CONSTRUCTION ONLY
B/O - BLACK/ORANGE
B/W - BLACK/WHITE
☒ - TYPE III BARRICADE
⊠ - TYPE III BARRICADE (MOD.)
═ TEMPORARY TRAFFIC BARRIER

TRAFFIC LAYOUT SHEET

SCALE 1" = 20'-0"

20 0 20

PROJECT NAME: FAIRFIELD	
PROJECT NUMBER: BRO 1448(41)	
FILE NAME: s12j170traff.dgn	PLOT DATE: 10-SEP-2014
PROJECT LEADER: R. YOUNG	DRAWN BY: K. FRIEDLAND
DESIGNED BY: R. KLINEFELTER	CHECKED BY: J. SALVATORI
TRAFFIC LAYOUT SHEET	SHEET 49 OF 69

DELINEATOR W/STEEL POST
STA 19+31.90 LT (GREEN)
STA 19+10.30 RT (BLUE)
STA 20+51.80 LT (GREEN)
STA 20+49.60 RT (BLUE)

ANCHOR FOR STEEL BEAM RAIL
STA 19+35.50 LT
STA 19+25.00 RT
STA 20+38.50 LT
STA 20+38.50 RT

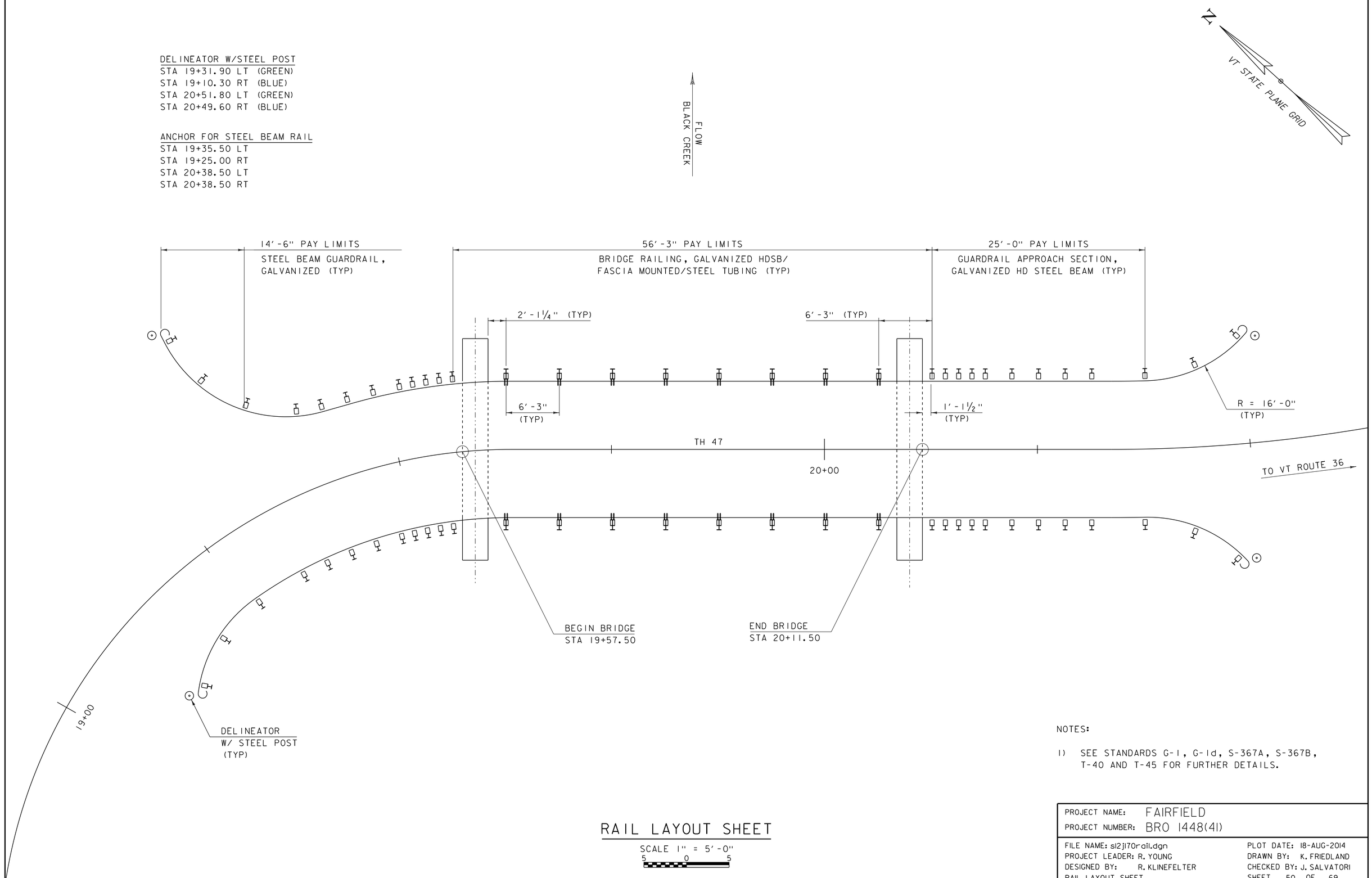

NOTES:

1) SEE STANDARDS G-1, G-1d, S-367A, S-367B, T-40 AND T-45 FOR FURTHER DETAILS.

RAIL LAYOUT SHEET

SCALE 1" = 5'-0"
5 0 5

PROJECT NAME: FAIRFIELD	
PROJECT NUMBER: BRO 1448(41)	
FILE NAME: s121170rail.dgn	PLOT DATE: 18-AUG-2014
PROJECT LEADER: R. YOUNG	DRAWN BY: K. FRIEDLAND
DESIGNED BY: R. KLINEFELTER	CHECKED BY: J. SALVATORI
RAIL LAYOUT SHEET	SHEET 50 OF 69

SOIL CLASSIFICATION

AASHTO

A1	Gravel and Sand
A3	Fine Sand
A2	Silty or Clayey Gravel and Sand
A4	Silty Soil - Low Compressibility
A5	Silty Soil - Highly Compressible
A6	Clayey Soil - Low Compressibility
A7	Clayey Soil - Highly Compressible

ROCK QUALITY DESIGNATION

R.Q.D. (%)	ROCK DESCRIPTION
<25	Very Poor
25 to 50	Poor
51 to 75	Fair
76 to 90	Good
>90	Excellent

SHEAR STRENGTH

UNDRAINED SHEAR STRENGTH IN P.S.F.	CONSISTENCY
<250	Very Soft
250-500	Soft
500-1000	Med. Stiff
1000-2000	Stiff
2000-4000	Very Stiff
>4000	Hard

CORRELATION GUIDE OF "N" TO DENSITY/CONSISTENCY

DENSITY (GRANULAR SOILS)

N	DESCRIPTIVE TERM
<5	Very Loose
5-10	Loose
11-24	Med. Dense
25-50	Dense
>50	Very Dense

CONSISTENCY (COHESIVE SOILS)

N	DESCRIPTIVE TERM
<2	Very Soft
2-4	Soft
5-8	Med. Stiff
9-15	Stiff
16-30	Very Stiff
31-60	Hard
>60	Very Hard

COMMONLY USED SYMBOLS

▼	Water Elevation
⊗	Standard Penetration Boring
⊕	Auger Boring
⊙	Rod Sounding
S	Sample
N	Standard Penetration Test Blow Count Per Foot For: 2" O.D. Sampler 1 3/8" I.D. Sampler Hammer Weight Of 140 Lbs. Hammer Fall Of 30"
VS	Field Vane Shear Test
US	Undisturbed Soil Sample
B	Blast
DC	Diamond Core
MD	Mud Drill
WA	Wash Ahead
HSA	Hollow Stem Auger
AX	Core Size 1 1/8"
BX	Core Size 1 5/8"
NX	Core Size 2 1/8"
M	Double Tube Core Barrel Used
LL	Liquid Limit
PL	Plastic Limit
PI	Plasticity Index
NP	Non Plastic
w	Moisture Content (Dry Wgt. Basis)
D	Dry
M	Moist
MTW	Moist To Wet
W	Wet
Sat	Saturated
Bo	Boulder
Gr	Gravel
Sa	Sand
Si	Silt
Cl	Clay
HP	Hardpan
Le	Ledge
NLTD	No Ledge To Depth
CNPF	Can Not Penetrate Further
TLOB	Top of Ledge Or Boulder
NR	No Recovery
Rec.	Recovery
%Rec.	Percent Recovery
RQD	Rock Quality Designation
CBR	California Bearing Ratio
<	Less Than
>	Greater Than
R	Refusal (N > 100)
VTSPG	NAD83 - See Note 7

COLOR

blk	Black	pnk	Pink
bl	Blue	pu	Purple
brn	Brown	rd	Red
dk	Dark	tn	Tan
gry	Gray	wh	White
gn	Green	yel	Yellow
lt	Light	mltc	Multicolored
or	Orange		

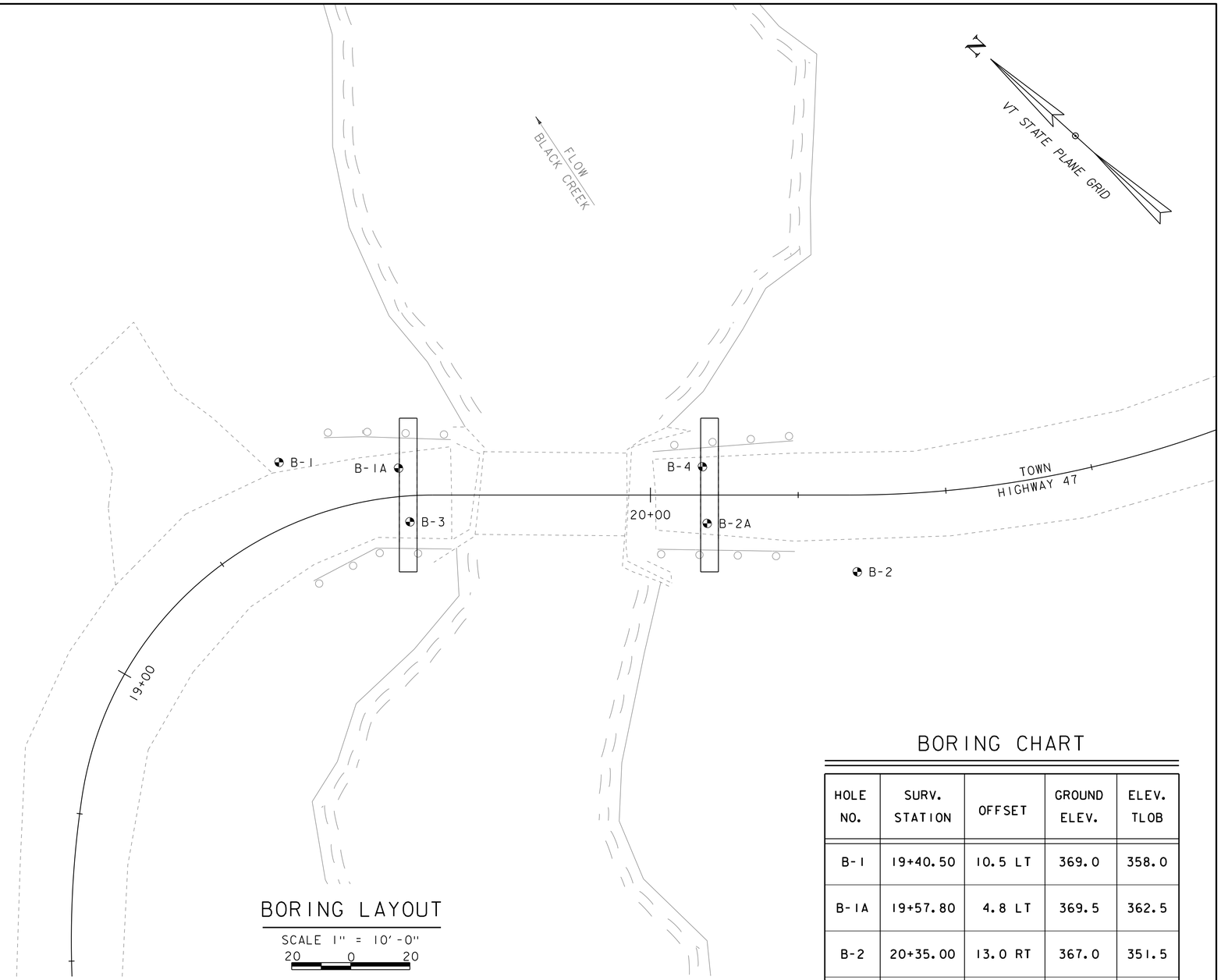

BORING LAYOUT

SCALE 1" = 10'-0"

20 0 20

BORING CHART

HOLE NO.	SURV. STATION	OFFSET	GROUND ELEV.	ELEV. TLOB
B-1	19+40.50	10.5 LT	369.0	358.0
B-1A	19+57.80	4.8 LT	369.5	362.5
B-2	20+35.00	13.0 RT	367.0	351.5
B-2A	20+09.60	4.8 RT	369.0	350.5
B-3	19+59.00	4.4 RT	369.5	361.5
B-4	20+08.80	4.8 LT	369.0	351.5

DEFINITIONS (AASHTO)

BEDROCK (LEDGE) - Rock in its native location of indefinite thickness.

BOULDER - A rock fragment with an average dimension > 12 inches.

COBBLE - Rock fragments with an average dimension between 3 and 12 inches.

GRAVEL - Rounded particles of rock < 3" and > 0.0787" (#10 sieve).

SAND - Particles of rock < 0.0787" (#10 sieve) and > 0.0029" (#200 sieve).

SILT - Soil < 0.0029" (#200 sieve), non or slightly plastic and exhibits no strength when air-dried.

CLAY - Fine grained soil, exhibits plasticity when moist and considerable strength when air-dried.

VARVED - Alternate layers of silt and clay.

HARDPAN - Extremely dense soil, cemented layer, not softened when wet.

MUCK - Soft organic soil (containing > 10% organic material.

MOISTURE CONTENT - Weight of water divided by dry weight of soil.

FLOWING SAND - Granular soil so saturated (loose) that it flows into drill casing during extraction of wash rod.

STRIKE - Angle from magnetic north to line of intersection of bed with a horizontal plane.

DIP - Inclination of bed with a horizontal plane.

GENERAL NOTES

1. The subsurface explorations shown herein were made between 2-14-13 and 4-30-13 by the CHA/New Hampshire Boring, INC.
2. Soil and rock classifications, properties and descriptions are based on engineering interpretation from available subsurface information by the Agency and may not necessarily reflect actual variations in subsurface conditions that may be encountered between individual boring or sample locations.
3. Observed water levels and/or conditions indicated are as recorded at the time of exploration and may vary according to the prevailing rainfall, methods of exploration and other factors.
4. Engineering judgment was exercised in preparing the subsurface information presented herein. Analysis and interpretation of subsurface data was performed and interpreted for Agency design and estimating purposes. Presentation of the information in the Contract is intended to provide the Contractor access to the same data available to the Agency. The subsurface information is presented in good faith and is not intended as a substitute for personal investigation, independent interpretation, independent analysis or judgment by the Contractor.
5. Pictorial structure details shown on the boring plan layout or soils profile are for illustrative purposes only and may not accurately portray final contract details.
6. Terminology used on boring logs to describe the hardness, degree of weathering, and spacing of fractures, joints and other discontinuities in the bedrock is defined in the AASHTO Manual on Subsurface Investigations, 1988.
7. Northing and Easting coordinates are shown in Vermont State Plane Grid North American Datum 1983 in meters and survey feet.

PROJECT NAME: FAIRFIELD
PROJECT NUMBER: BRO 1448(41)

FILE NAME: s12j170bor.dgn
PROJECT LEADER: R. YOUNG
DESIGNED BY: R. KLINEFELTER
BORING LAYOUT

PLOT DATE: 18-AUG-2014
DRAWN BY: K. FRIEDLAND
CHECKED BY: J. SALVATORI
SHEET 51 OF 69

STATE OF VERMONT
AGENCY OF TRANSPORTATION
MATERIALS & RESEARCH SECTION
SUBSURFACE INFORMATION

BORING LOG

FAIRFIELD
BRO 1448(41)
Elm Brook Road, Fairfield, VT

Boring No.: **B-1**
Page No.: 1 of 1
Pin No.: 12J170
Checked By: J. MacGregor

Boring Crew: P. Schofield, K. Owens
Date Started: 2/14/13 Date Finished: 2/14/12
VTSPG NAD83: N 835816.59 ft E 1544031.13 ft
Station: 19+40.5 Offset: 10.5L
Ground Elevation: 369.0 ft

	Casing	Sampler
Type:	WB	SS
I.D.:	4 in	1.38 in
Hammer Wt:	300 lb.	140 lb.
Hammer Fall:	30 in.	30 in.
Hammer/Rod Type:	Manual/NW	
Rig:	TRUCK D50	C_E = 1.0

Groundwater Observations

Date	Depth (ft)	Notes
02/14/13	6.0	

Depth (ft)	Strata (1)	CLASSIFICATION OF MATERIALS (Description)	Run (Dip deg.)	Core Rec. % (RQD %)	Drill Rate minutes/ft	Blows/6" (N Value)	Moisture Content %	Gravel %	Sand %	Fines %	LL %	PI %
		A-1-a, **f.c. SAND**. Some f.c. Gravel, trace silt, trace organics, very compact, brown, Moist, Rec. = 0.6 ft, (FILL) Rollerbit through frost layer.				38-50/4" (R)						
		A-2-4										
5		A-2-4, **f.c. SAND**, AND SILT, trace organics, loose, brown, Moist, Rec. = 1.7 ft				3-3-2-1 (5)			59.8	40.2		
		A-2-4, **f. SAND**.Some Silt, trace organics, very loose, red-brn, Wet, Rec. = 1.5 ft				1-1-0-1 (1)						
		A-4, **Clayey SILT**, AND f. SAND, trace organics, very soft, brown, Wet										
10		A-4, Rec. = 1.6 ft, Becomes soft				2-2-1-4 (3)	24.8		20.0	80.0	18	1
		Not Sampled, Advanced rollerbit 11.0 ft to 12.5 ft. Rock coring started at 12.5 ft.					Top of Bedrock @ 11.0 ft					
15		12.5 ft - 17.5 ft, Greenish gray, Schist, Medium close fracture spacing, near vertical bedding. Hard, Slightly to moderately weathered, NXDC, Excellent RQD. Zones of white-pink quartz embedded within rock core.	R-1	96 (90)	12							
20		17.5 ft - 22.5 ft, Similar Rock. NXDC	R-2	100 (94)	12							
		Hole stopped @ 22.5 ft										
25		Remarks: Project performed under CHA project No. 25043.										

Notes:
1. Stratification lines represent approximate boundary between material types. Transition may be gradual.
2. N Values have not been corrected for hammer energy. C_E is the hammer energy correction factor.
3. Water level readings have been made at times and under conditions stated. Fluctuations of groundwater may occur due to other factors than those present at the time measurements were made.

BORING LOG 25043_BRO1448_LOGS.GPJ VERMONT AOT.GDT 5/7/13

STATE OF VERMONT
AGENCY OF TRANSPORTATION
MATERIALS & RESEARCH SECTION
SUBSURFACE INFORMATION

BORING LOG

FAIRFIELD
BRO 1448(41)
Elm Brook Road, Fairfield, VT

Boring No.: **B-1A**
Page No.: 1 of 1
Pin No.: 12J170
Checked By: K. Adnams

Boring Crew: P. LaVossiere, K. Owens
Date Started: 4/29/13 Date Finished: 4/29/13
VTSPG NAD83: N 835801.89 ft E 1544041.49 ft
Station: 19+57.8 Offset: 4.8L
Ground Elevation: 369.5 ft

	Casing	Sampler
Type:	WB	SS
I.D.:	4 in	1.38 in
Hammer Wt:	300 lb.	140 lb.
Hammer Fall:	30 in.	30 in.
Hammer/Rod Type:	Manual/NW	
Rig:	TRUCK MOBILE B-47	C_E = 1.0

Groundwater Observations

Date	Depth (ft)	Notes
04/29/13	9.0	

Depth (ft)	Strata (1)	CLASSIFICATION OF MATERIALS (Description)	Run (Dip deg.)	Core Rec. % (RQD %)	Drill Rate minutes/ft	Blows/6" (N Value)	Moisture Content %	Gravel %	Sand %	Fines %
		A-1-b, **f.c. GRAVEL**, Some f.c. Sand, little silt, medium compact, brown, Moist, Rec. = 0.9 ft, (FILL)				15-13-9-5 (22)				
		A-1-b, **Similar Soil**, Rec. = 0.9 ft, (FILL)				4-13-10-13 (23)				
5		A-4, **Clayey SILT**, little f.c. gravel, hard, brown, Moist, Rec. = 0.3 ft, Cobble/boulder fragments recovered in shoe of spoon.				12-50/3" (R)				
		No Recovery, Rec. = 0.0 ft, Casing refusal at 7.0 ft, interpreted as top of compentent bedrock surface.				7-50/2" (R)				
		Not Sampled, Advanced rollerbit 7.0 ft to 9.0 ft. Rock coring started at 9.0 ft.				Top of Bedrock @ 7.0 ft				
10		9.0 ft - 14.0 ft, Gray, Schist, Very close fracture spacing. Moderately hard to hard, Moderately to severely weathered, NXDC, Poor RQD. Seams of quartz embedded within rock core.	R-1	100 (28)	4.2					
15		14.0 ft - 19.0 ft, Similar Rock. NXDC	R-2	100 (40)	4.81					
		Hole stopped @ 19.0 ft								
20		Remarks: Project performed under CHA project No. 25043.								
25										

Notes:
1. Stratification lines represent approximate boundary between material types. Transition may be gradual.
2. N Values have not been corrected for hammer energy. C_E is the hammer energy correction factor.
3. Water level readings have been made at times and under conditions stated. Fluctuations of groundwater may occur due to other factors than those present at the time measurements were made.

BORING LOG 25043_BRO1448_LOGS.GPJ VERMONT AOT.GDT 5/7/13

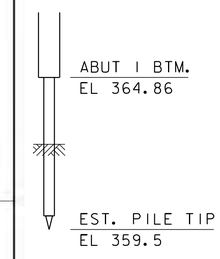

PROJECT NAME: FAIRFIELD
PROJECT NUMBER: BRO 1448(41)

FILE NAME: s12j170bor.dgn
PROJECT LEADER: R. YOUNG
DESIGNED BY: R. KLINEFELTER
BORING LOGS 1

PLOT DATE: 18-AUG-2014
DRAWN BY: K. FRIEDLAND
CHECKED BY: J. SALVATORI
SHEET 52 OF 69

STATE OF VERMONT
AGENCY OF TRANSPORTATION
MATERIALS & RESEARCH SECTION
SUBSURFACE INFORMATION

BORING LOG

FAIRFIELD
BRO 1448(41)
Elm Brook Road, Fairfield, VT

Boring No.: **B-2**
Page No.: 1 of 1
Pin No.: 12J170
Checked By: J. MacGregor

Boring Crew: P. Schofield, K. Owens
Date Started: 2/15/13 Date Finished: 2/15/13
VTSPG NAD83: N 835730.62 ft E 1544081.80 ft
Station: 20+35.0 Offset: 13.0R
Ground Elevation: 367.0 ft

	Casing	Sampler
Type:	WB	SS
I.D.:	4 in	1.38 in
Hammer Wt:	300 lb.	140 lb.
Hammer Fall:	30 in.	30 in.
Hammer/Rod Type:	Manual/NW	
Rig:	TRUCK D50	C_E = 1.0

Groundwater Observations

Date	Depth (ft)	Notes
02/15/13	6.0	

Depth (ft)	Strata (1)	CLASSIFICATION OF MATERIALS (Description)	Run (Dip deg.)	Core Rec. % (RQD %)	Drill Rate minutes/ft	Blows/6" (N Value)	Moisture Content %	Gravel %	Sand %	Fines %
		A-1-b, **f.m.c. GRAVEL**, Some Silt, little f.c. sand, trace organics, very compact, brown, Moist, Rec. = 0.6 ft, (FILL) Advanced rollerbit to 4 feet through frost layer.				37-45-50/2" (R)				
		A-4								
5		A-4, **Clayey SILT**, little f. sand, little f.c. gravel. medium stiff, brn-gry, Moist, Rec. = 0.3 ft				15-4-1-1 (5)				
		A-2-4, **f. SAND**. Some clayey Silt, very loose, red-brn, Wet, Rec. = 1.4 ft				1-1-1-1 (2)				
		A-4, **Clayey SILT**, AND f. SAND, little organics, soft, red-brn, Moist, Moderate organic odor observed in sample from 7 to 9.3 feet.								
10		A-4, Rec. = 1.0 ft, Becomes medium stiff A-2-4, **f. SAND**. Some clayey Silt, loose, gray, Wet				4-2-3-4 (5)				
		A-4								
15		A-4, **Clayey SILT**, Some f.c. Gravel, little f.c. sand, hard, gray, Moist, Rec. = 0.8 ft, (TILL)				9-17-50/6" (R)				
		Not Sampled, Advanced rollerbit 15.5 ft to 16 ft. Rock coring started at 16 ft.				Top of Bedrock @ 15.5 ft				
		16.0 ft - 21.0 ft, Greenish gray, Schist, Medium close fracture spacing, near vertical bedding. Moderately hard, Slightly weathered, NXDC, Excellent RQD	R-1	100 (100)	6					
20		21.0 ft - 26.0 ft, NXDC, Similar Rock	R-2	98 (98)	6					
25										
		Hole stopped @ 26.0 ft								

Remarks:
Project performed under CHA project No. 25043.

Notes:
1. Stratification lines represent approximate boundary between material types. Transition may be gradual.
2. N Values have not been corrected for hammer energy. C_E is the hammer energy correction factor.
3. Water level readings have been made at times and under conditions stated. Fluctuations of groundwater may occur due to other factors than those present at the time measurements were made.

BORING LOG 25043_BRO1448_LOGS.GPJ VERMONT AOT.GDT 5/7/13

STATE OF VERMONT
AGENCY OF TRANSPORTATION
MATERIALS & RESEARCH SECTION
SUBSURFACE INFORMATION

BORING LOG

FAIRFIELD
BRO 1448(41)
Elm Brook Road, Fairfield, VT

Boring No.: **B-2A**
Page No.: 1 of 2
Pin No.: 12J170
Checked By: K. Adnams

Boring Crew: P. LaVossiere, K. Owens
Date Started: 4/29/13 Date Finished: 4/29/13
VTSPG NAD83: N 835756.72 ft E 1544070.03 ft
Station: 20+9.6 Offset: 4.8R
Ground Elevation: 369.0 ft

	Casing	Sampler
Type:	WB	SS
I.D.:	4 in	1.38 in
Hammer Wt:	300 lb.	140 lb.
Hammer Fall:	30 in.	30 in.
Hammer/Rod Type:	Manual/NW	
Rig:	TRUCK MOBILE B-47	C_E = 1.0

Groundwater Observations

Date	Depth (ft)	Notes
04/29/13	10.0	

Depth (ft)	Strata (1)	CLASSIFICATION OF MATERIALS (Description)	Run (Dip deg.)	Core Rec. % (RQD %)	Drill Rate minutes/ft	Blows/6" (N Value)	Moisture Content %	Gravel %	Sand %	Fines %
		A-1-a, **f.c. GRAVEL**, AND f.c. SAND, trace silt, trace brick, compact, brown, Moist, Rec. = 1.2 ft, (FILL)				19-22-26-15 (48)				
		A-1-b, **f.c. GRAVEL**, Some Silt, Some f.c. Sand, medium compact, gray, Moist, Rec. = 0.4 ft, (FILL)				47-22-8-10 (30)				
5		A-2-4, **f.c. SAND**, little silt, medium compact, brown, Moist, Rec. = 0.7 ft				8-6-5-4 (11)				
		A-2-4, Rec. = 1.0 ft, becomes loose				4-3-5-4 (8)				
		A-1-b, **f.c. SAND**, trace silt, very loose, brown, Wet, Rec. = 1.4 ft				3-1-2-1 (3)				
10		A-1-b, Rec. = 1.1 ft, turns gray, becomes loose				3-4-4-6 (8)				
		A-1-b, **f.c. SAND**,little organics, trace silt, compact, gray, Wet, Rec. = 1.0 ft, Portion of tree branch recovered in sample spoon.				6-5-33-34 (38)				
15		A-1-b, Rec. = 0.3 ft, becomes loose				5-4-5-4 (9)				
		A-1-b, Rec. = 1.4 ft, turns dark gray				4-4-3-5 (7)				
		Not Sampled, Advanced rollerbit 18.5 ft to 19.0 ft. Rock core started at 19.0 ft.				Top of Bedrock @ 18.5 ft				
20		19.0 ft - 24.0 ft, Gray, Schist, Close fracture spacing. Moderately hard to hard, Slightly weathered, NXDC, Excellent RQD	R-1	100 (90)	3.4					
25		24.0 ft - 29.0 ft, Gray, Schist, Medium close fracture spacing. Moderately hard to hard, Slightly weathered, NXDC, Good RQD	R-2	96 (82)	3.6					
		Hole stopped @ 29.0 ft								

Notes:
1. Stratification lines represent approximate boundary between material types. Transition may be gradual.
2. N Values have not been corrected for hammer energy. C_E is the hammer energy correction factor.
3. Water level readings have been made at times and under conditions stated. Fluctuations of groundwater may occur due to other factors than those present at the time measurements were made.

BORING LOG 25043_BRO1448_LOGS.GPJ VERMONT AOT.GDT 5/7/13

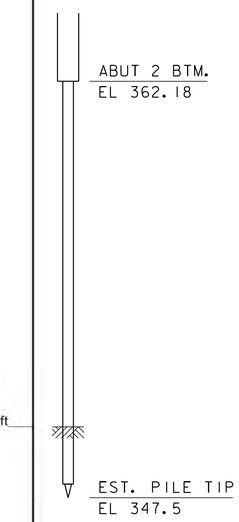

PROJECT NAME: FAIRFIELD
PROJECT NUMBER: BRO 1448(41)

FILE NAME: s12j170bor.dgn
PROJECT LEADER: R. YOUNG
DESIGNED BY: R. KLINEFELTER
BORING LOGS 2
PLOT DATE: 18-AUG-2014
DRAWN BY: K. FRIEDLAND
CHECKED BY: J. SALVATORI
SHEET 53 OF 69

STATE OF VERMONT
AGENCY OF TRANSPORTATION
MATERIALS & RESEARCH SECTION
SUBSURFACE INFORMATION

BORING LOG

FAIRFIELD
BRO 1448(41)
Elm Brook Road, Fairfield, VT

Boring No.: **B-3**
Page No.: 1 of 1
Pin No.: 12J170
Checked By: K. Adnams

Boring Crew: P. LaVossiere, K. Owens
Date Started: 4/30/13 Date Finished: 4/30/13
VTSPG NAD83: N 835792.41 ft E 1544036.42 ft
Station: 19+59.0 Offset: 4.4R
Ground Elevation: 369.5 ft

	Casing	Sampler
Type:	WB	N/A
I.D.:	4 in	1.38 in
Hammer Wt:	300 lb.	140 lb.
Hammer Fall:	30 in.	30 in.
Hammer/Rod Type:	Manual/NW	
Rig: TRUCK MOBILE B-47	C_E = 1.0	

Groundwater Observations

Date	Depth (ft)	Notes
04/30/13		None obs.

ABUT 1 BTM.
EL 364.86

EST. PILE TIP
EL 358.5

Depth (ft)	Strata (1)	CLASSIFICATION OF MATERIALS (Description)	Run (Dip deg.)	Core Rec. % (RQD %)	Drill Rate minutes/ft	Blows/6" (N Value)	Moisture Content %	Gravel %	Sand %	Fines %
		Not Sampled, Advanced boring to top of bedrock without soil sampling.								
5										
		Not Sampled, Casing refusal at 8.0 ft. Advanced roller bit 8.0 ft to 9.0 ft. Rock coring started at 9.0 ft.				Top of Bedrock @ 8.0 ft				
10		9.0 ft - 12.0 ft, Gry-white, Schist, Very close fracture spacing. Medium hard, Severely weathered, NXDC, Poor RQD. Quartz seams embedded within rock core. Core barrel jammed at 12'.	R-1	100 (47)	5.99					
		12.0 ft - 14.0 ft, NXDC, Similar Rock	R-2	100 (35)	6.99					
15		Hole stopped @ 14.0 ft								
		Remarks: Project performed under CHA project No. 25043.								
20										
25										

Notes:
1. Stratification lines represent approximate boundary between material types. Transition may be gradual.
2. N Values have not been corrected for hammer energy. C_E is the hammer energy correction factor.
3. Water level readings have been made at times and under conditions stated. Fluctuations of groundwater may occur due to other factors than those present at the time measurements were made.

BORING LOG 25043_BRO1448_LOGS.GPJ VERMONT AOT.GDT 5/7/13

STATE OF VERMONT
AGENCY OF TRANSPORTATION
MATERIALS & RESEARCH SECTION
SUBSURFACE INFORMATION

BORING LOG

FAIRFIELD
BRO 1448(41)
Elm Brook Road, Fairfield, VT

Boring No.: **B-4**
Page No.: 1 of 1
Pin No.: 12J170
Checked By: K. Adnams

Boring Crew: P. LaVossiere, K. Owens
Date Started: 4/30/13 Date Finished: 4/30/13
VTSPG NAD83: N 835763.81 ft E 1544076.93 ft
Station: 20+8.8 Offset: 4.8L
Ground Elevation: 369.0 ft

	Casing	Sampler
Type:	WB	N/A
I.D.:	4 in	1.38 in
Hammer Wt:	300 lb.	140 lb.
Hammer Fall:	30 in.	30 in.
Hammer/Rod Type:	Manual/NW	
Rig: TRUCK MOBILE B-47	C_E = 1.0	

Groundwater Observations

Date	Depth (ft)	Notes
04/30/13		None obs.

ABUT 2 BTM.
EL 362.18

EST. PILE TIP
EL 348.5

Depth (ft)	Strata (1)	CLASSIFICATION OF MATERIALS (Description)	Run (Dip deg.)	Core Rec. % (RQD %)	Drill Rate minutes/ft	Blows/6" (N Value)	Moisture Content %	Gravel %	Sand %	Fines %
		Not Sampled, Advanced boring to top of bedrock without soil sampling.								
5										
10										
15										
		Not Sampled, Casing refusal at 17.5 ft. Advanced roller bit 17.5 ft to 19.0 ft. Rock coring started at 19.0 ft.				Top of Bedrock @ 17.5 ft				
20		19.0 ft - 24.0 ft, Gray, Schist, Medium close fracture spacing. Medium hard, Slightly weathered, NXDC, Excellent RQD. Quartz seams embedded within rock core.	R-1	92 (92)	5.21					
25		Hole stopped @ 24.0 ft								
		Remarks: Project performed under CHA project No. 25043.								

Notes:
1. Stratification lines represent approximate boundary between material types. Transition may be gradual.
2. N Values have not been corrected for hammer energy. C_E is the hammer energy correction factor.
3. Water level readings have been made at times and under conditions stated. Fluctuations of groundwater may occur due to other factors than those present at the time measurements were made.

BORING LOG 25043_BRO1448_LOGS.GPJ VERMONT AOT.GDT 5/7/13

PROJECT NAME: FAIRFIELD
PROJECT NUMBER: BRO 1448(41)

FILE NAME: s12j170bor.dgn
PROJECT LEADER: R. YOUNG
DESIGNED BY: R. KLINEFELTER
BORING LOGS 3

PLOT DATE: 18-AUG-2014
DRAWN BY: K. FRIEDLAND
CHECKED BY: J. SALVATORI
SHEET 54 OF 69

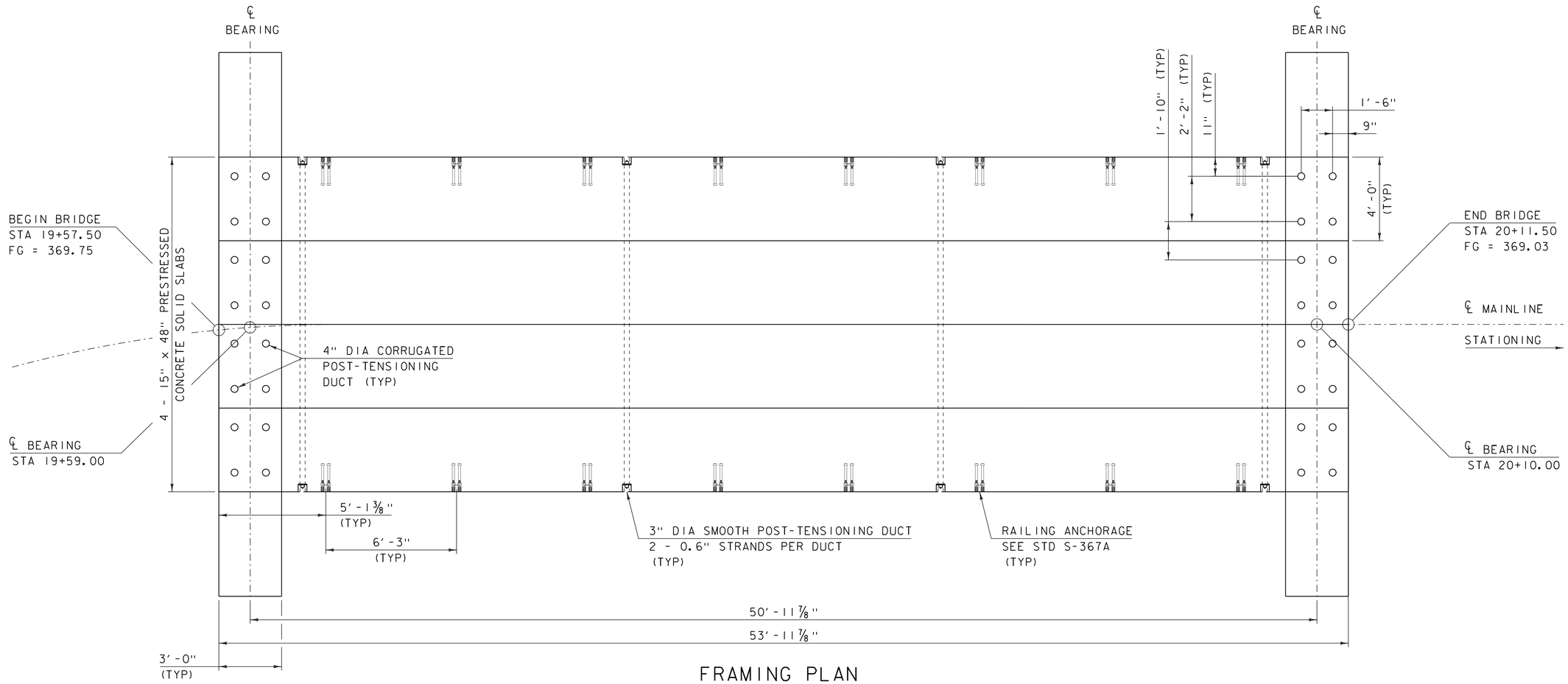

FRAMING PLAN

SCALE 3/8" = 1'-0"

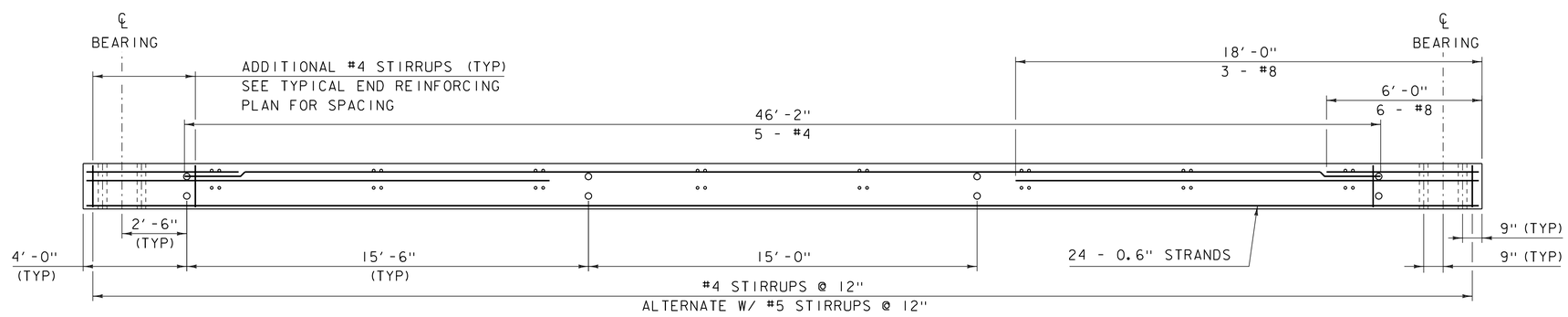

SLAB ELEVATION

SCALE 3/8" = 1'-0"

NOTES:

1) ALL REINFORCING SHALL BE LEVEL 2 OR HIGHER.

PROJECT NAME: FAIRFIELD	
PROJECT NUMBER: BRO 1448 (41)	
FILE NAME: s12j170sup.dgn	PLOT DATE: 18-AUG-2014
PROJECT LEADER: R. YOUNG	DRAWN BY: K. FRIEDLAND
DESIGNED BY: T. FILLBACH	CHECKED BY: R. KLINEFELTER
FRAMING PLAN	SHEET 55 OF 69

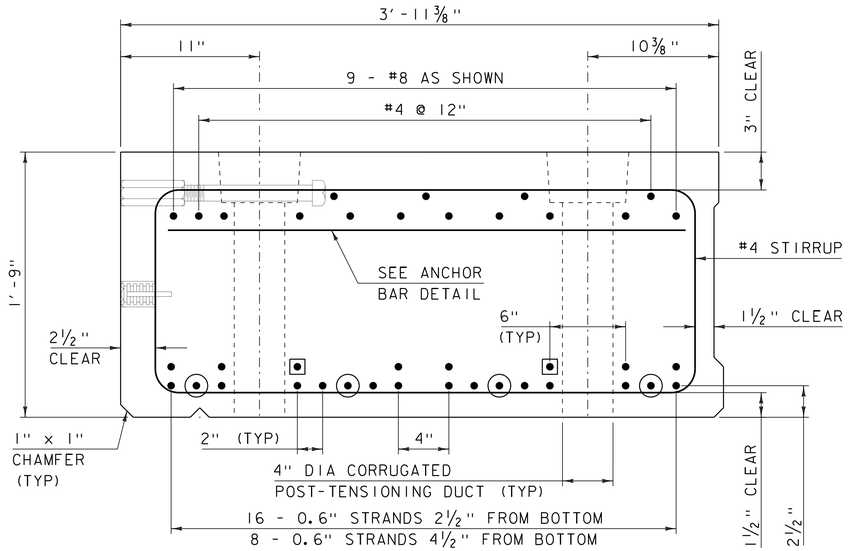

TYPICAL EXTERIOR SECTION

SCALE 2" = 1'-0"

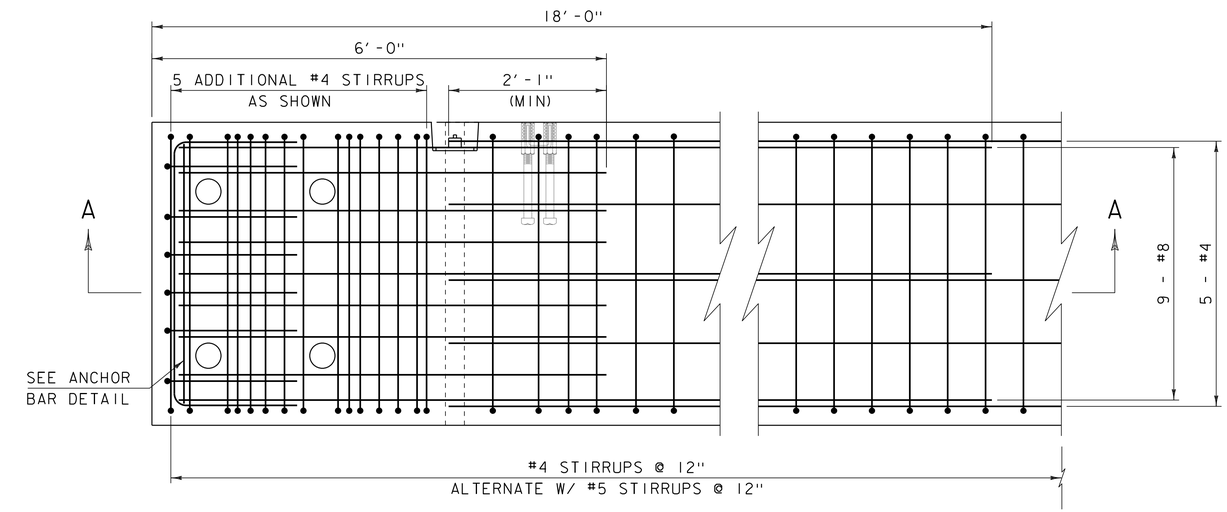

TYPICAL END REINFORCING PLAN

SCALE 1" = 1'-0"

NOTES:

1) EXTERIOR SLAB SHOWN, INTERIOR SLAB SIMILAR.

○ - 8'-0" DEBOND EACH END

□ - 6'-0" DEBOND EACH END

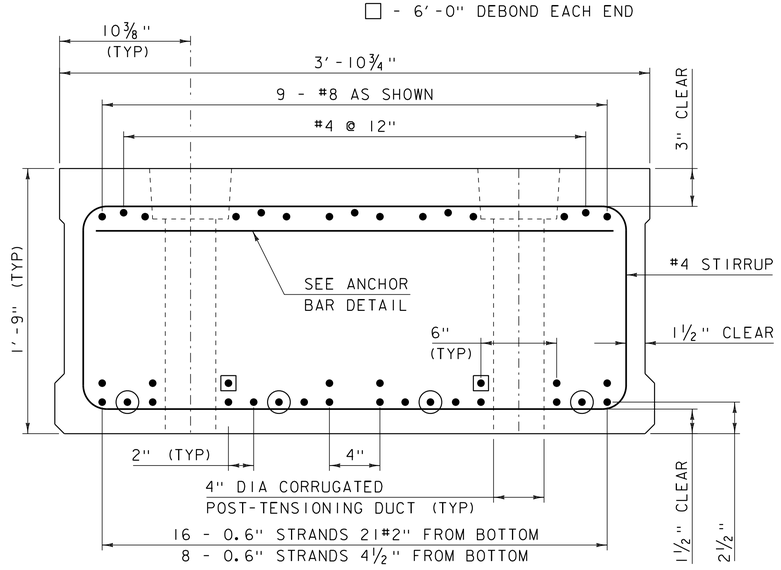

TYPICAL INTERIOR SECTION

SCALE 2" = 1'-0"

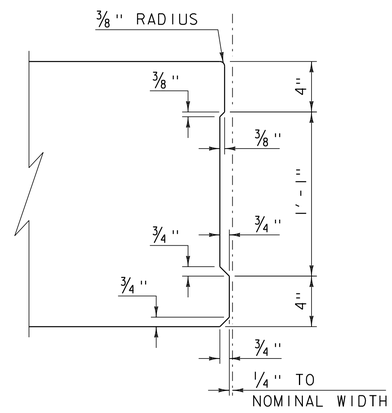

SHEAR KEY DETAIL

SCALE 2" = 1'-0"

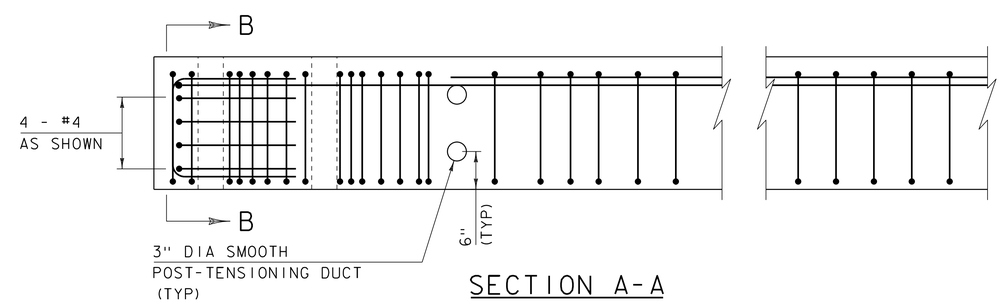

SECTION A-A

SCALE 1" = 1'-0"

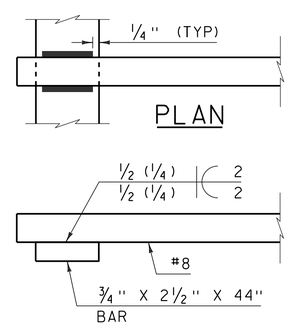

ELEVATION
ANCHOR BAR DETAILS
OPTION "A"

NOT TO SCALE

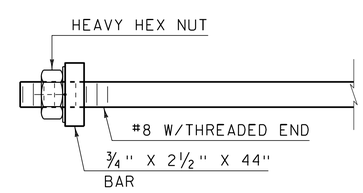

ANCHOR BAR DETAILS
OPTION "B"

NOT TO SCALE

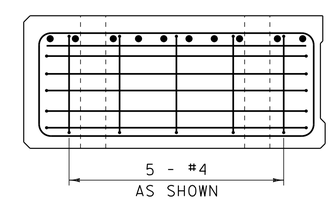

SECTION B-B

SCALE 1" = 1'-0"

NOTES:

1) ALL REINFORCING SHALL BE LEVEL 1 (EPOXY COATED) OR HIGHER.

2) ANCHOR BAR SHALL BE ASTM A36 AND SHALL BE GALVANIZED IN ACCORDANCE WITH AASHTO M 111M/M 111.

3) DAMAGED GALVANIZING OR REINFORCEMENT COATING ON THE ANCHOR BAR ASSEMBLY SHALL BE REPAIRED BY AN APPROVED METHOD.

PROJECT NAME: FAIRFIELD	
PROJECT NUMBER: BRO 1448 (41)	
FILE NAME: s12j170sup.dgn	PLOT DATE: 18-AUG-2014
PROJECT LEADER: R. YOUNG	DRAWN BY: K. FRIEDLAND
DESIGNED BY: T. FILLBACH	CHECKED BY: R. KLINEFELTER
SUPERSTRUCTURE DETAILS 1	SHEET 56 OF 69

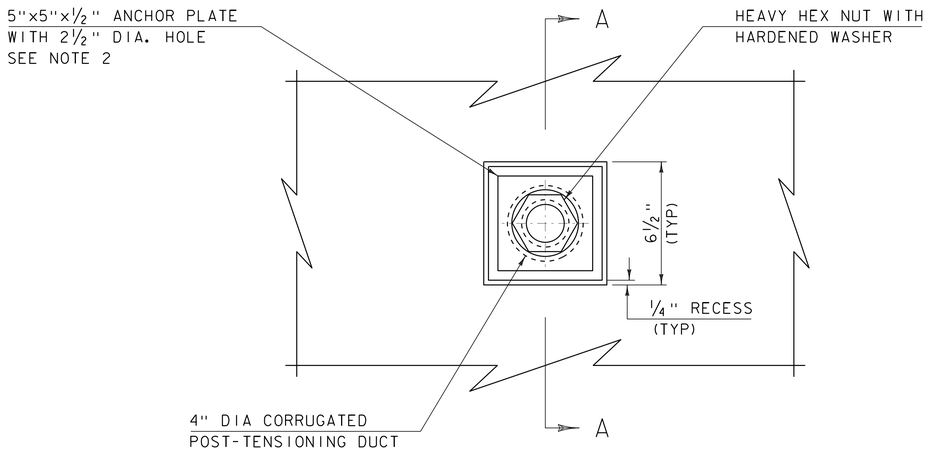

ANCHOR BOLT DETAIL
PLAN

SCALE 3" = 1'-0"

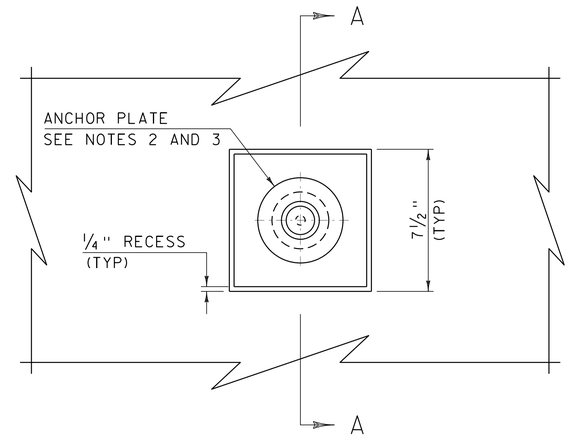

TRANSVERSE POST-TENSIONING DETAIL
ELEVATION

SCALE 3" = 1'-0"

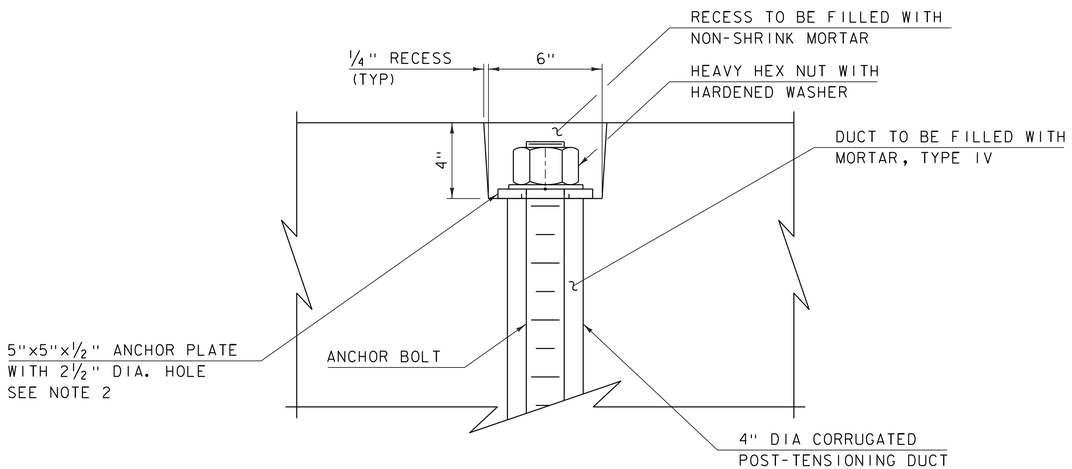

ANCHOR BOLT DETAIL
SECTION A-A

SCALE 3" = 1'-0"

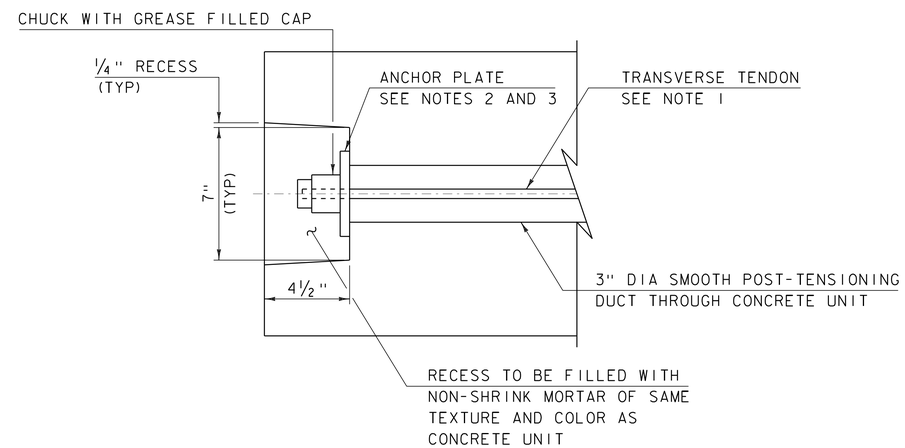

TRANSVERSE POST-TENSIONING DETAIL
SECTION A-A

SCALE 3" = 1'-0"

NOTES:

1) TRANSVERSE TENDONS SHALL BE COVERED BY SEAMLESS POLYPROPYLENE SHEATH (WITH CORROSION INHIBITER GREASE BETWEEN SHEATH AND STRAND) FOR THE LENGTH OF STRAND, EXCEPT AT ANCHORAGE LOCATIONS. EACH STRAND SHALL BE TENSIONED TO 33 KIPS FOR 0.5" DIA STRAND AND TO 47 KIPS FOR 0.6" DIA STRAND.

2) ANCHOR PLATES SHALL CONFORM TO AASHTO M 270M/M 270, GRADE 345 (GRADE 50) AND BE GALVANIZED IN CONFORMANCE WITH AASHTO M 111M/M 111.

3) ANCHOR PLATES FOR TRANSVERSE POST-TENSIONING ARE TO BE DESIGNED BY THE FABRICATOR FOR THE SPECIFIC POST-TENSIONING SYSTEM USED. DETAILS FOR THE ANCHOR PLATE SHALL BE PROVIDED ON THE FABRICATION DRAWINGS.

PROJECT NAME: FAIRFIELD	
PROJECT NUMBER: BRO 1448 (41)	
FILE NAME: s121170sup.dgn	PLOT DATE: 18-AUG-2014
PROJECT LEADER: R. YOUNG	DRAWN BY: K. FRIEDLAND
DESIGNED BY: T. FILLBACH	CHECKED BY: R. KLINEFELTER
SUPERSTRUCTURE DETAILS 2	SHEET 57 OF 69

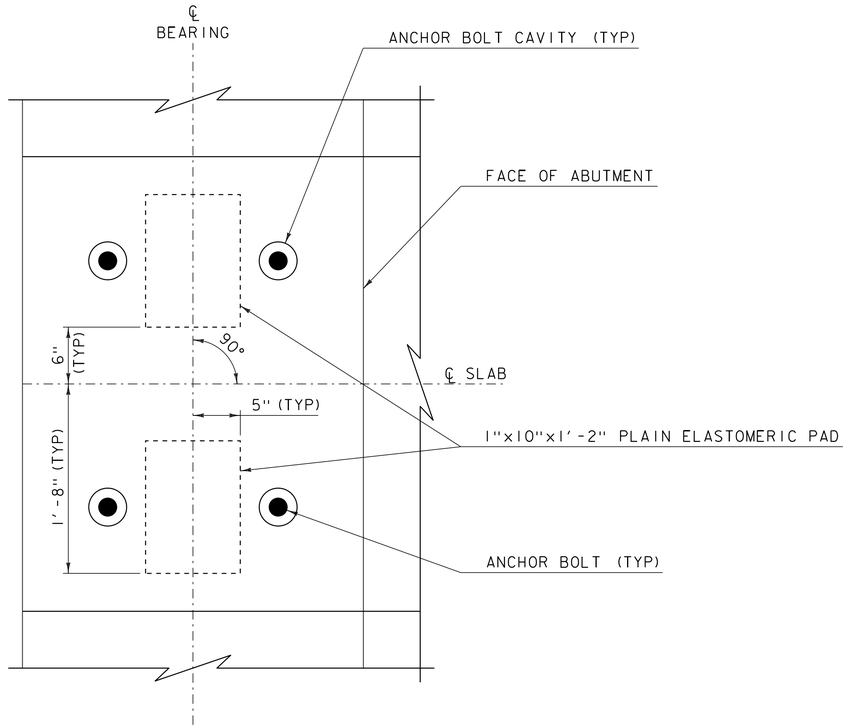

BEARING LAYOUT

SCALE 1½" = 1'-0"

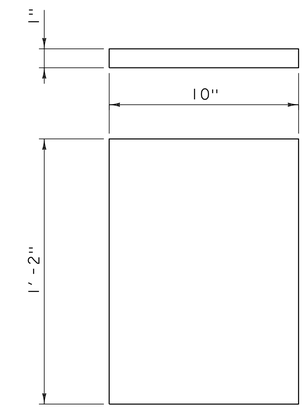

BEARING DETAIL

SCALE 3" = 1'-0"

BEARING NOTES:

1. BEARINGS SHALL CONFORM TO THE APPLICABLE SUBSECTIONS OF SECTIONS 531 AND 731.

2. THE ELASTOMER WAS DESIGNED WITH A SHEAR MODULUS OF 110 PSI +/- 15%.

3. THE CONTRACTOR IS ADVISED TO HAVE A MINIMUM OF 16 - ¼"x10"x1'-2" GALVANIZED STEEL SHIMS AVAILABLE FOR USE FOR ELEVATION ADJUSTMENTS UPON THE SETTING OF THE SUPERSTRUCTURE UNITS. THE SHIMS SHALL BE FABRICATED ACCORDING TO SECTION 531 AND SHALL BE INCLUDED UNDER ITEM 531.16,"BEARING DEVICE ASSEMBLY, PLAIN ELASTOMERIC PAD".

PROJECT NAME: FAIRFIELD	
PROJECT NUMBER: BRO 1448 (41)	
FILE NAME: s12j170sup.dgn	PLOT DATE: 18-AUG-2014
PROJECT LEADER: R. YOUNG	DRAWN BY: R. KLINEFELTER
DESIGNED BY: R. KLINEFELTER	CHECKED BY: J. SALVATORI
BEARING DETAILS	SHEET 58 OF 69

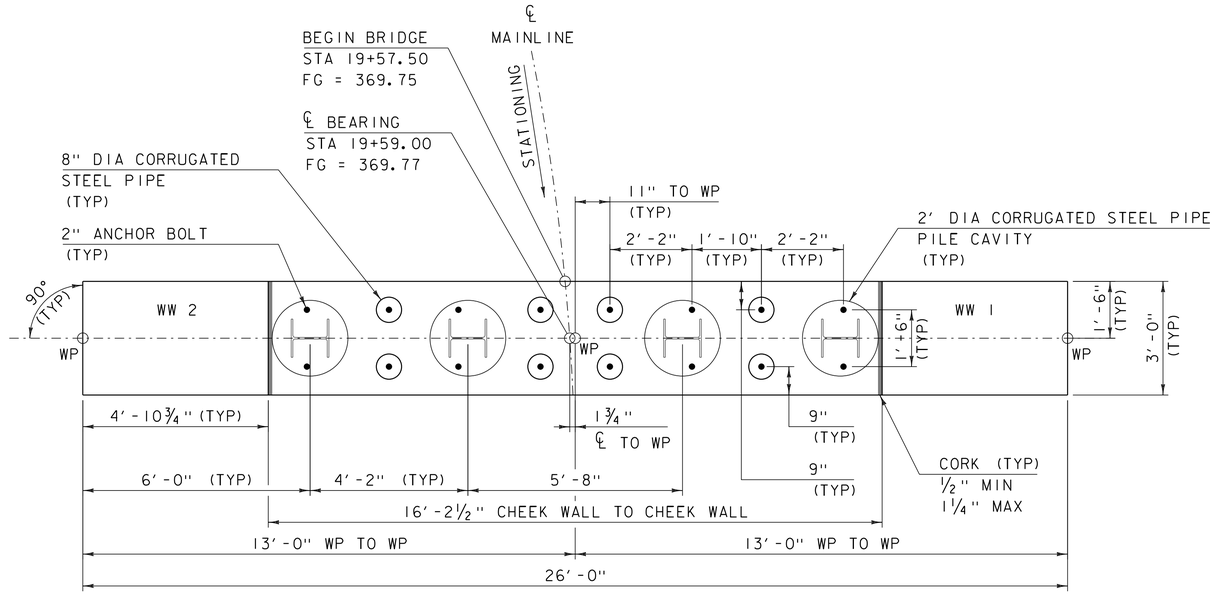

ABUTMENT PLAN (PCU)

SCALE ½" = 1'-0"

NOTES:

1) ANCHOR BOLTS SHALL BE ASTM F1554 GRADE 105.

2) ANCHOR BOLTS, NUTS, AND WASHERS SHALL BE GALVANIZED.

3) 8" DIA CORRUGATED STEEL PIPES FOR ANCHOR BOLTS SHALL BE PRECAST INTO THE PILE CAPS. DRILLING AND GROUTING ANCHOR BOLTS WILL NOT BE PERMITTED.

4) ANCHOR BOLTS, NUTS, WASHERS, AND ANCHOR PLATES SHALL BE PAID FOR UNDER ITEM 506.60, STRUCTURAL STEEL (FPQ).

5) GROUT IN 8" DIA CORRUGATED STEEL PIPES FOR ANCHOR BOLTS SHALL HAVE A MINIMUM COMPRESSIVE STRENGTH OF 10 KSI AT 28 DAYS.

6) ANCHOR BOLTS LOCATED IN PILE CAVATIES SHALL HAVE A HEAVY HEX NUT AND HARDENED WASHER ON THE BOTTOM END OF EACH ANCHOR BOLT AND SHALL BE SECURED IN THE FINAL POSITION BEFORE THE PILE CAVITY CONCRETE IS PLACED.

7) A TEMPLATE SHALL BE USED TO LAYOUT ANCHOR BOLT DUCTS IN THE SOLID SLABS. THE SAME TEMPLATE SHALL BE USED TO LAYOUT ANCHOR BOLT DUCTS AND ANCHOR BOLTS IN THE ABUTMENTS.

8) ALL COSTS ASSOCIATED WITH FURNISHING AND INSTALLING SHEET MEMBRANE WATERPROOFING SHALL BE CONSIDERED INCIDENTAL TO THE WORK FOR PRECAST CONCRETE STRUCTURE.

9) PCU 1 SHOWN, PCU 2 SIMILAR.

PCU 1 ELEVATIONS

ELEV "A"	369.86
ELEV "B"	367.78
ELEV "C"	364.86
ELEV "D"	367.94
ELEV "E"	370.18
ELEV "F"	368.10

PCU 2 ELEVATIONS

ELEV "A"	369.50
ELEV "B"	367.42
ELEV "C"	362.18
ELEV "D"	367.26
ELEV "E"	369.18
ELEV "F"	367.10

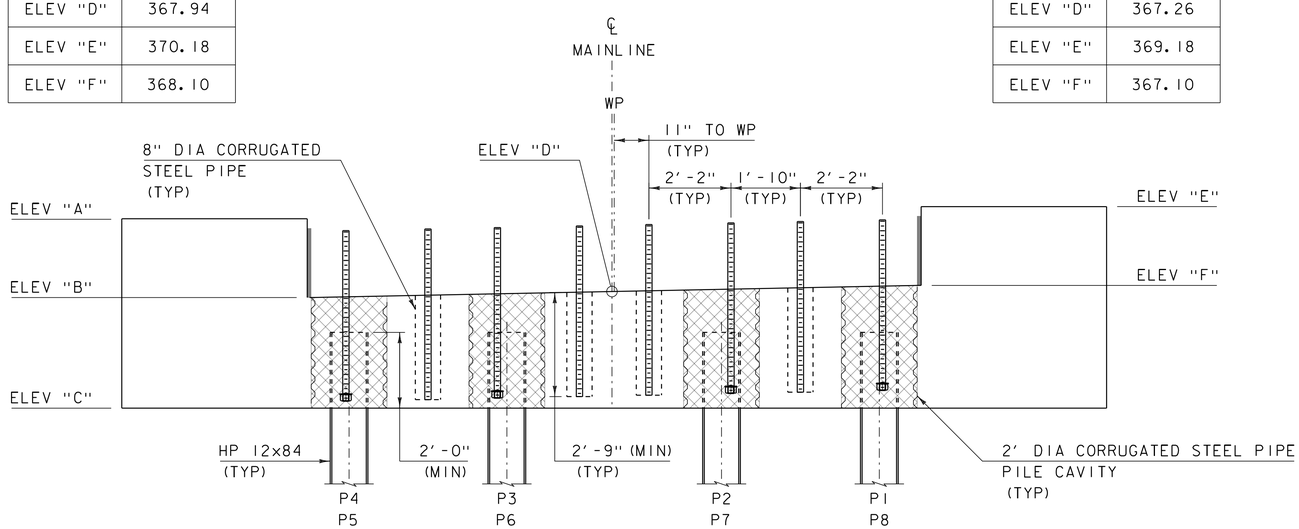

ABUTMENT ELEVATION (PCU)

SCALE ½" = 1'-0"

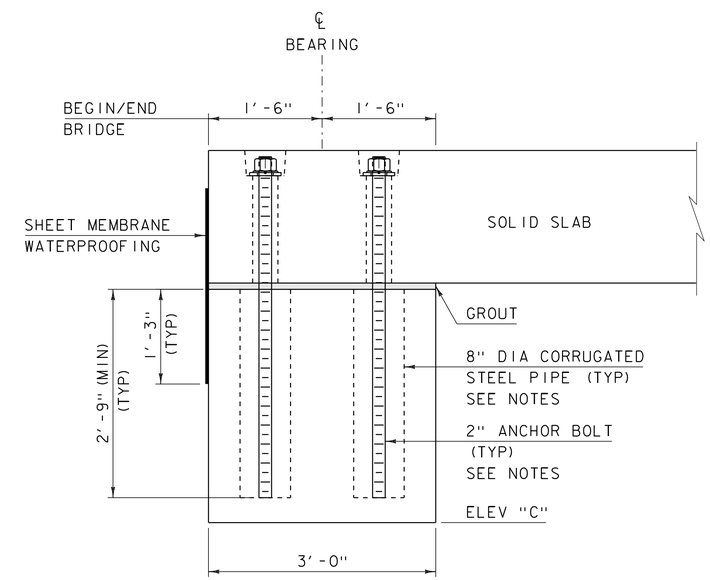

ABUTMENT TYPICAL (PCU)

SCALE 1" = 1'-0"

PROJECT NAME:	FAIRFIELD
PROJECT NUMBER:	BRO 1448 (41)

FILE NAME: s12j170sub.dgn	PLOT DATE: 11-SEP-2014
PROJECT LEADER: R. YOUNG	DRAWN BY: K. FRIEDLAND
DESIGNED BY: T. FILLBACH	CHECKED BY: R. KLINEFELTER
ABUTMENT PLAN	SHEET 59 OF 69

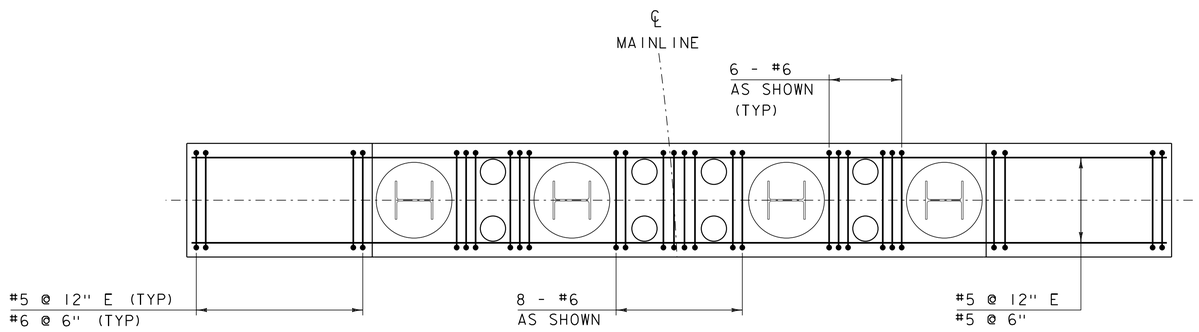

ABUTMENT REINFORCING PLAN (PCU)

SCALE 1/2" = 1'-0"

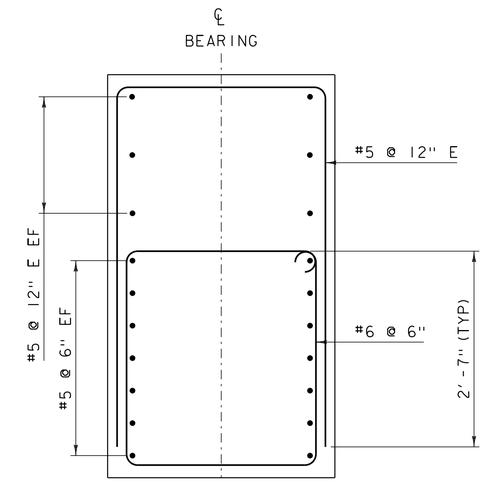

SECTION B-B

SCALE 1" = 1'-0"

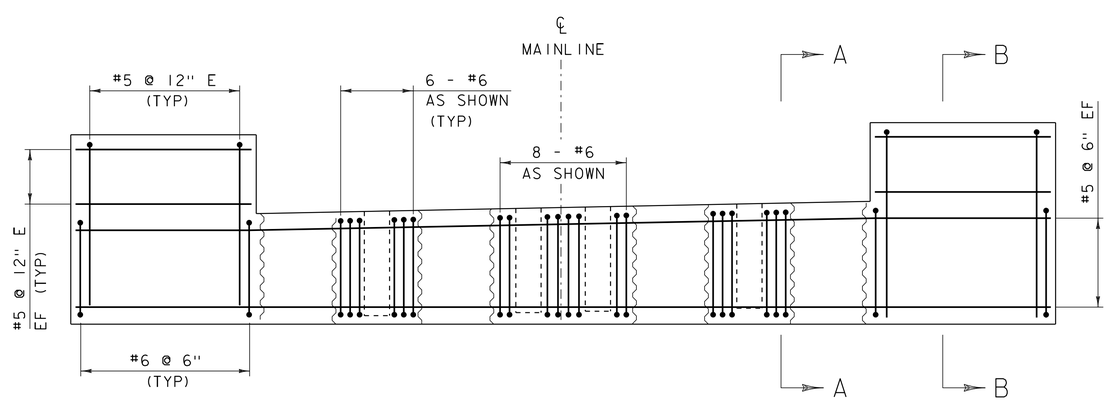

ABUTMENT REINFORCING ELEVATION (PCU)

SCALE 1/2" = 1'-0"

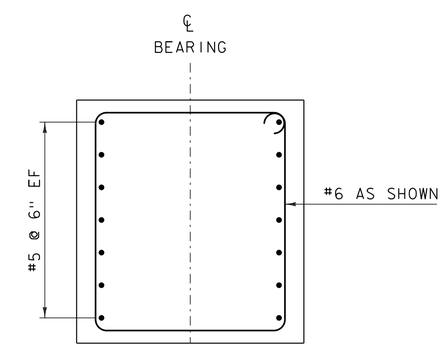

SECTION A-A

SCALE 1" = 1'-0"

NOTE:

E = LEVEL 1 (EPOXY) REINFORCING
NF = NEAR FACE
FF = FAR FACE
EF = EACH FACE
▲ = CUT TO FIT IN FIELD
3" CLEAR, UNLESS OTHERWISE SPECIFIED ON THE PLANS.
SPLICES NOT DETAILED SHALL BE DESIGNED

NOTES:

1) PCU 1 SHOWN, PCU 2 SIMILAR.

PROJECT NAME: FAIRFIELD	
PROJECT NUMBER: BRO 1448 (41)	
FILE NAME: s12j170sub.dgn	PLOT DATE: 18-AUG-2014
PROJECT LEADER: R. YOUNG	DRAWN BY: K. FRIEDLAND
DESIGNED BY: T. FILLBACH	CHECKED BY: R. KLINEFELTER
ABUTMENT REINFORCING	SHEET 60 OF 69

EPSC PLAN NARRATIVE

1.1 PROJECT DESCRIPTION

THIS PROJECT INVOLVES THE REMOVAL OF BRIDGE 46 IN ITS ENTIRETY. BRIDGE 46 WILL BE REPLACED WITH A NEW STRUCTURE, SPANNING 51 FEET OVER BLACK CREEK, ON NEW ABUTMENTS ALONG THE SAME ALIGNMENT. BRIDGE 46 IS LOCATED IN THE TOWN OF FAIRFIELD, ON TOWN HIGHWAY 47, APPROXIMATELY 250 FEET FROM THE INTERSECTION OF VT ROUTE 36 AND TOWN HIGHWAY 47.

NOTE: AREA OF DISTURBANCE INCLUDES LIMITS OF EARTH DISTURBANCE WITHIN THE PROJECT AREA, AS WELL AS WASTE, BORROW AND STAGING AREAS, AND OTHER EARTH DISTURBING ACTIVITIES WITHIN OR DIRECTLY ADJACENT TO THE PROJECT LIMITS AS SHOWN ON THE ATTACHED EPSC PLAN.

TOTAL AREA OF DISTURBANCE AS SHOWN ON THE ATTACHED EPSC PLAN IS APPROXIMATELY 0.27 ACRES.

IT IS ANTICIPATED THAT THIS PROJECT WILL LAST ONE CONSTRUCTION SEASON.

1.2 SITE INVENTORY

1.2.1 TOPOGRAPHY

THE TOPOGRAPHY OF THE AREA IS A FLOODPLAIN AND WETLANDS THAT IS BUFFER FARMLAND WITH FOREST UPSLOPE. TOWN HIGHWAY 47 IS THE ONLY ROADWAY WITHIN THE PROJECT SITE, VT ROUTE 36 IS NOT WITHIN THE PROJECT SITE, BUT IS NEARBY. THERE ARE NO RESIDENCES NEAR THE PROJECT.

1.2.2 DRAINAGE, WATERWAYS, BODIES OF WATER, AND PROXIMITY TO NATURAL OR MAN-MADE WATER FEATURES

BLACK CREEK IS THE ONLY WATER SOURCE ON THE PROJECT SITE. THE CREEK IS CLASSIFIED AS SINUOUS, AND ALLUVIAL WITH AN INCISED CHANNEL AT THE SITE. THE STREAM BED CONSISTS OF CLAY AND SILT. THE TRIBUTARY AREA AT THE BRIDGE CROSSING IS 39.2 MILES^2. DUE TO THE NATURE OF THE SURROUNDING TERRAIN THE PROJECT SITE COULD RECEIVE RUNOFF WATER FROM A FEW NEARBY SLOPES. THERE IS AN OLD RAIL BRIDGE JUST UPSTREAM THAT IS PART OF A RAIL-TRAIL.

1.2.3 VEGETATION

THE VEGETATION IN THE PROJECT AREA CONSISTS OF SCRUB TREES, UNDERGROWTH, AND WHATEVER CROP HAS BEEN PLANTED. THE IMPACT TO VEGETATION WILL BE LIMITED TO THAT WHICH IS DIRECTLY AFFECTED BY REPLACEMENT OF THE EXISTING BRIDGE. UPON PROJECT COMPLETION, THE CHANNEL WILL BE ARMORED WITH STONE FILL TYPE III AS SPECIFIED ON THE PLANS. DISTURBED VEGETATION WILL BE REESTABLISHED WITH STANDARD SEED AND MULCH PRACTICES.

1.2.4 SOILS

ALL SOIL DATA CAME FROM THE U.S. DEPARTMENT OF AGRICULTURE SOIL CONSERVATION SERVICE FOR THE COUNTY OF FRANKLIN, VERMONT. SOIL ON THE PROJECT SITE IS PODUNK VARIANT SILT LOAM, 0% TO 2% SLOPES, "K FACTOR" = 0.32. THE SOIL IS CONSIDERED NOT HIGHLY ERODIBLE.

NOTE: K-VALUES GENERALLY INDICATE THE FOLLOWING:
0.0-0.23 = LOW EROSION POTENTIAL
0.24-0.36 = MODERATE EROSION POTENTIAL
0.37 AND HIGHER = HIGH EROSION POTENTIAL

1.2.5 SENSITIVE RESOURCE AREAS

CRITICAL HABITATS: NO
HISTORICAL OR ARCHEOLOGICAL AREAS: NO
PRIME AGRICULTURAL LAND: YES, TO THE EAST OF THE STRUCTURE
THREATENED AND ENDANGERED SPECIES: NO
WATER RESOURCE: BLACK CREEK
WETLANDS: YES, MOST OF THE SURROUNDING AREA IS WETLANDS.

1.3 RISK EVALUATION

THIS PROJECT DOES NOT FALL UNDER THE JURISDICTION OF GENERAL PERMIT 3-9020 FOR STORMWATER RUNOFF FROM CONSTRUCTION SITES. SHOULD CHANGES PRIOR TO OR DURING CONSTRUCTION RESULT IN ONE OR MORE ACRES OF EARTH DISTURBANCE OR SHOULD THE PROJECT BECOME PART OF A LARGER PLAN OF DEVELOPMENT, THE CONTRACTOR WILL BE RESPONSIBLE FOR ANY ADDITIONAL PERMITTING.

1.4 EROSION PREVENTION AND SEDIMENT CONTROL

THE EROSION CONTROL PLANS ARE MEANT AS A GUIDELINE FOR PREVENTING EROSION AND CONTROLLING SEDIMENT TRANSPORT. THE PRINCIPLES OUTLINED IN THIS NARRATIVE CONSIST OF APPLYING MEASURES THROUGHOUT CONSTRUCTION OF THE PROJECT IN ORDER TO MINIMIZE SEDIMENT TRANSPORT TO THE RECEIVING WATERS. THE MEASURES INCLUDE STABILIZATION AND STRUCTURAL PRACTICES, STORM WATER CONTROLS AND OTHER POLLUTION PREVENTION PRACTICES. THEY HAVE BEEN PROPOSED BY THE DESIGNER AS A BASIS FOR PROTECTING RESOURCES AND WILL NEED TO BE BUILT UPON BASED ON THE SPECIFIC MEANS AND METHODS OF THE CONTRACTOR. REFER TO THE LOW RISK SITE HANDBOOK AND APPROPRIATE DETAIL SHEETS FOR SPECIFIC GUIDANCE AND CONSTRUCTION DETAILING.

ALL MEASURES SHALL BE REGULARLY MAINTAINED AND SHALL BE CHECKED FOR SEDIMENT BUILD-UP. SEDIMENT SHALL BE DISPOSED OF AT AN APPROVED SITE WHERE IT WILL NOT BE SUBJECT TO EROSION.

1.4.1 MARK SITE BOUNDARIES

SITE BOUNDARIES AND AREAS CONSTRUCTION EQUIPMENT CAN ACCESS SHALL BE DELINEATED.

PROJECT DEMARCATION FENCING (PDF) SHALL BE USED TO PHYSICALLY MARK SITE BOUNDARIES, BARRIER FENCE SHALL BE USED INSTEAD OF PROJECT DEMARCATION FENCE WITHIN 100 FEET OF A WATER RESOURCE (STREAM, BROOK, LAKE, POND, WETLAND, ETC).

1.4.2 LIMIT DISTURBANCE AREA

PREVENTING INITIAL SOIL EROSION BY MINIMIZING THE EXPOSED AREA IS MUCH MORE EFFECTIVE THAN TREATING ERODED SEDIMENT. EARTH DISTURBANCE CAN BE MINIMIZED THROUGH CONSTRUCTION PHASING BY ONLY OPENING UP EARTH AS NECESSARY. THIS CAN LIMIT THE AREA THAT WILL BE DISTURBED AND EXPOSED TO EROSION. EMPLOY TEMPORARY CONSTRUCTION STABILIZATION PRACTICES IN INCREMENTAL STAGES AS PHASES CHANGE. FOR PROJECTS WHICH FALL UNDER THE CONSTRUCTION GENERAL PERMIT, ONLY THE ACREAGE LISTED ON THE PERMIT AUTHORIZATION MAY BE EXPOSED AT ANY GIVEN TIME.

MAINTAINING VEGETATED BUFFERS ALONG STREAM BANKS, WETLANDS OR OTHER SENSITIVE AREAS IS A CRUCIAL EROSION AND SEDIMENT CONTROL MEASURE THAT SHOULD BE ESTABLISHED WHEREVER POSSIBLE.

1.4.3 SITE ENTRANCE/EXIT STABILIZATION

TRACKING OF SEDIMENT ONTO PUBLIC HIGHWAYS SHALL BE MINIMIZED TO REDUCE THE POTENTIAL FOR RUNOFF ENTERING RECEIVING WATERS. INSTALLATION SHALL COINCIDE WITH THE CONTRACTORS PROGRESS SCHEDULE.

STABILIZED CONSTRUCTION ENTRANCES SHALL BE INSTALLED AS PROPOSED ON THE EPSC PLAN AND ANYWHERE EQUIPMENT WILL BE GOING FROM AREAS OF EXPOSED SOILS TO PAVED SURFACES.

1.4.4 INSTALL SEDIMENT BARRIERS

SEDIMENT BARRIERS SHALL BE UTILIZED TO INTERCEPT RUNOFF AND ALLOW SUSPENDED SEDIMENT TO SETTLE OUT. THEY SHALL BE INSTALLED PRIOR TO ANY UP SLOPE WORK.

FILTER CURTAIN SHALL BE INSTALLED AS PROPOSED ON THE EPSC PLANS PRIOR TO ANY CHANNEL WORK.

SILT FENCE WILL BE INSTALLED AS PROPOSED ON THE EPSC PLAN, WOVEN WIRE REINFORCED SILT FENCE SHALL BE USED INSTEAD OF SILT FENCE WITHIN 100 FEET UPSLOPE OF RECEIVING WATERS.

1.4.5 DIVERT UPLAND RUNOFF

DIVERSIONARY MEASURES SHALL BE USED TO INTERCEPT RUNOFF FROM ABOVE THE CONSTRUCTION AND DIRECT IT AROUND THE DISTURBED AREA SO THAT CLEAN WATER DOES NOT BECOME MUDDIED WHILE TRAVELING OVER EXPOSED SOILS ON THE CONSTRUCTION SITE.

THE PROJECT AREA IS RELATIVELY FLAT. THEREFORE IT IS NOT ANTICIPATED THAT DIVERSION MEASURES WILL BE NECESSARY.

1.4.6 SLOW DOWN CHANNELIZED RUNOFF

CHECK STRUCTURES SHALL BE UTILIZED TO REDUCE THE VELOCITY, AND THUS THE EROSIVE POTENTIAL, OF CONCENTRATED FLOW IN CHANNELS.

THE USE OF STONE CHECK DAMS IS NOT ANTICIPATED FOR THIS PROJECT.

1.4.7 CONSTRUCT PERMANENT CONTROLS

PERMANENT STORMWATER TREATMENT DEVICES SHALL BE INSTALLED AS SHOWN ON THE PLANS AND IN ACCORDANCE WITH PERMIT CONDITIONS.

1.4.8 STABILIZE EXPOSED SOILS DURING CONSTRUCTION

ALL AREAS OF DISTURBANCE MUST HAVE TEMPORARY STABILIZATION IN PLACE WITHIN 48 HOURS OF DISTURBANCE OR IN ACCORDANCE WITH THE CONSTRUCTION GENERAL PERMIT 3-9020 AUTHORIZATION.

SURFACE ROUGHENING OF ALL EXPOSED SLOPES, COMBINED WITH TEMPORARY MULCHING, SHALL BE UTILIZED ON A REGULAR BASIS. BIODEGRADABLE EROSION CONTROL MATTING OR AN EQUIVALENT SHALL BE USED TO STABILIZE ALL SLOPES STEEPER THAN 1:3.

THE FORECAST OF RAINFALL EVENTS SHALL TRIGGER IMMEDIATE PROTECTION OF EXPOSED SOILS.

1.4.9 WINTER STABILIZATION

VARIOUS MEASURES SPECIFIC TO WINTER MAY BE NECESSARY SHOULD THE PROJECT EXTEND INTO WINTER (OCTOBER 15 THROUGH APRIL 15). REFER TO THE LOW RISK SITE HANDBOOK FOR GUIDANCE.

1.4.10 STABILIZE SOIL AT FINAL GRADE

EXPOSED SOIL MUST BE STABILIZED WITHIN 48 HOURS OF REACHING FINAL GRADE.

SEED, MULCH, FERTILIZER AND LIME SHALL BE USED TO ESTABLISH PERMANENT VEGETATION. FOR SLOPES STEEPER THAN 1:3, BIODEGRADABLE EROSION CONTROL MATTING OR AN EQUIVALENT SHALL BE USED INSTEAD OF MULCH.

1.4.11 DE-WATERING ACTIVITIES

DISCHARGE FROM DEWATERING ACTIVITIES THAT FLOWS OFF OF THE CONSTRUCTION SITE MUST NOT CAUSE OR CONTRIBUTE TO A VIOLATION OF THE VERMONT WATER QUALITY STANDARDS.

TREATMENT OF DEWATERING COFFERDAM IS NOT ANTICIPATED.

1.4.12 INSPECT YOUR SITE

INSPECT THE PROJECT SITE BASED ON SPECIAL PROVISION REQUIREMENTS OR CONSTRUCTION GENERAL PERMIT AUTHORIZATION STIPULATIONS.

1.5 SEQUENCE AND STAGING

THIS SECTION WILL BE DEVELOPED BY THE CONTRACTOR USING THE GUIDANCE OUTLINED IN THE VTRANS EPSC PLAN CONTRACTOR CHECKLIST.

1.5.1 CONSTRUCTION SEQUENCE

1.5.2 OFF-SITE ACTIVITIES

IN ADDITION TO THE CONTRACTOR CHECKLIST ANY ACTIVITIES OUTSIDE THE CONSTRUCTION LIMITS SHALL FOLLOW SPECIFICATION 105.25- 105.29 OF THE STANDARD SPECIFICATIONS FOR CONSTRUCTION.

1.5.3 UPDATES

NOTES:

1. FOR CLARITY, AREAS TO BE SEEDED AND MULCHED HAVE NOT BEEN INDICATED. HOWEVER, ALL DISTURBED AREAS SHALL BE SEEDED AND MULCHED AS APPLICABLE.

2. EXISTING CONTOURS SHOWN. SEE CROSS SECTIONS FOR FINAL CONTOURS.

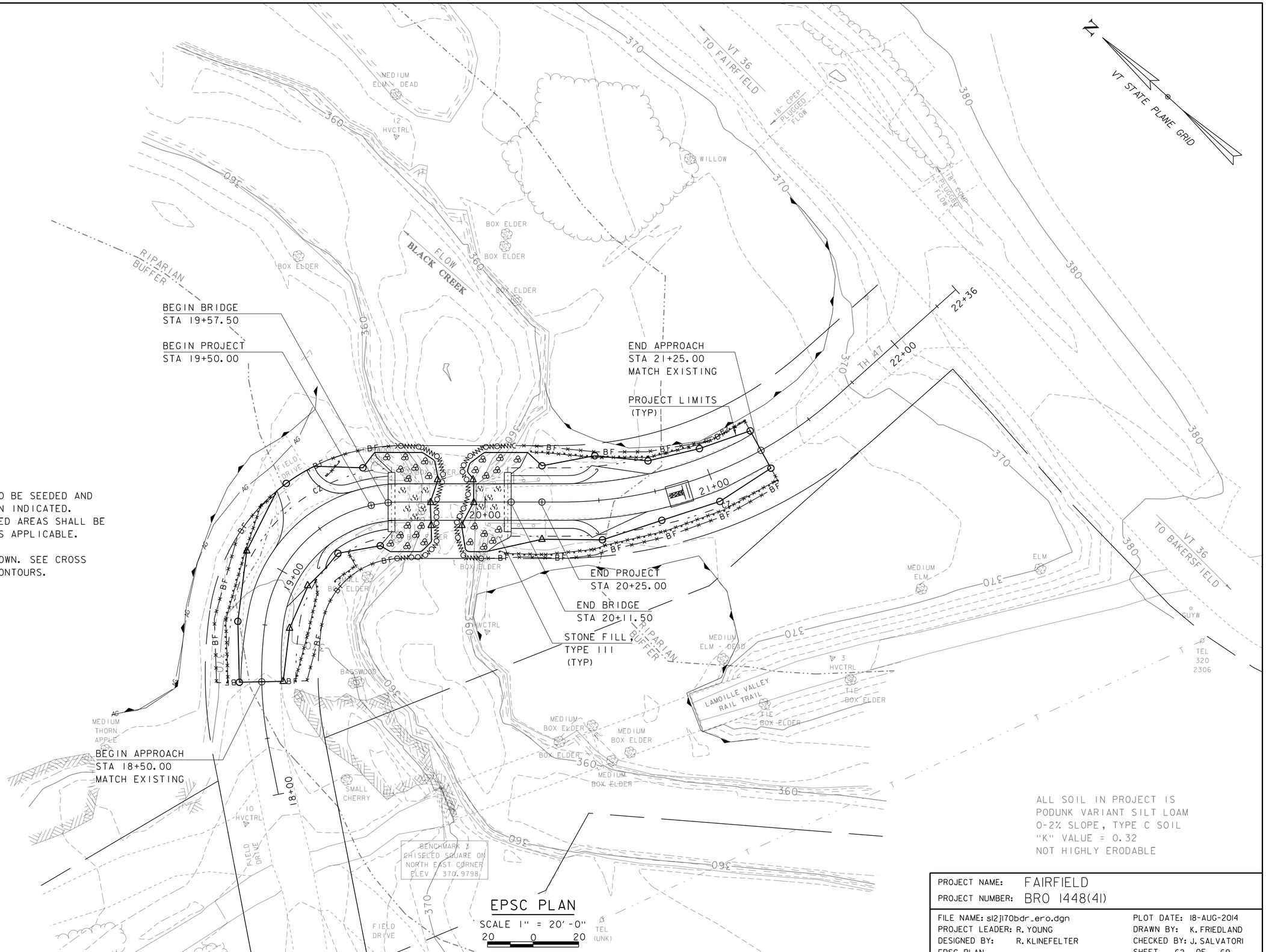

ALL SOIL IN PROJECT IS
PODUNK VARIANT SILT LOAM
0-2% SLOPE, TYPE C SOIL
"K" VALUE = 0.32
NOT HIGHLY ERODABLE

EPSC PLAN

SCALE 1" = 20'-0"
20 0 20

PROJECT NAME: FAIRFIELD	
PROJECT NUMBER: BRO 1448(41)	
FILE NAME: s12j170bdr_ero.dgn	PLOT DATE: 18-AUG-2014
PROJECT LEADER: R. YOUNG	DRAWN BY: K. FRIEDLAND
DESIGNED BY: R. KLINEFELTER	CHECKED BY: J. SALVATORI
EPSC PLAN	SHEET 62 OF 69

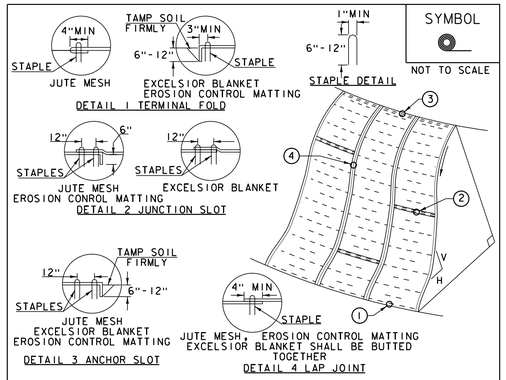

CONSTRUCTION SPECIFICATIONS

1. APPLY TO SLOPES GREATER THAN 3H: 1V OR WHERE NECESSARY TO AID IN ESTABLISHING VEGETATION.
2. APPLY FERTILIZER, LIME SEED PRIOR TO PLACING MATTING.
3. STAPLES ARE TO BE PLACED ALTERNATELY, IN COLUMNS APPROXIMATELY 2' APART AND IN ROWS APPROXIMATELY 3' APART. APPROXIMATELY 175 STAPLES ARE REQUIRED PER 4'X225' ROLL OF MATERIAL AND 125 STAPLES ARE REQUIRED PER 4'X150' ROLL OF MATERIAL.
4. DISTURBED AREAS SHALL BE SMOOTHLY GRADED. EROSION CONTROL MATERIAL SHALL BE PLACED LOOSELY OVER GROUND SURFACE. DO NOT STRETCH.
5. ALL TERMINAL ENDS AND TRANSVERSE LAPS SHALL BE STAPLED AT APPROXIMATELY 12" INTERVALS.

ADAPTED FROM DETAILS PROVIDED BY: NEW YORK STATE DEC
ORIGINALLY DEVELOPED BY USDA-NRCS
VERMONT DEPARTMENT OF ENVIRONMENTAL CONSERVATION

ROLLED EROSION CONTROL PRODUCT (RECP) SIDE SLOPE

NOTES:
REFER TO "THE VERMONT STANDARDS & SPECIFICATIONS FOR EROSION PREVENTION & SEDIMENT CONTROL -2006- "FROM THE VT AGENCY OF NATURAL RESOURCES FOR ADDITIONAL GUIDANCE.
THIS WORK SHALL BE PERFORMED IN ACCORDANCE WITH SECTION 653 AND AS SHOWN IN THE PLANS FOR TEMPORARY EROSION MATTING (PAY ITEM 653.20) OR PERMANENT EROSION MATTING (PAY ITEM 653.21).

REVISIONS	
APRIL 16, 2007	JMF
JANUARY 13, 2009	WHF

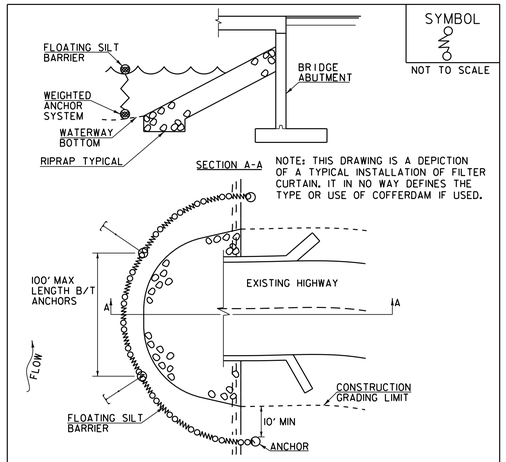

CONSTRUCTION SPECIFICATIONS

1. FILTER CURTAIN SHALL NOT BE PLACED ACROSS A FLOWING WATERWAY, OR IN A WATERWAY WITH STREAM VELOCITIES GREATER THAN 1.5 FEET/SECOND.
2. MAXIMUM 100' LENGTH BETWEEN ANCHORS.
3. LAST SECTION SHALL TERMINATE A MINIMUM OF 10' BEYOND LIMIT OF DISTURBANCE.
4. THE WEIGHTED ANCHOR SYSTEM SHALL BE A TYPE WHICH ALLOWS THE CURTAIN TO CONFORM TO THE BOTTOM OF THE WATERWAY.
5. THE CURTAIN SHALL BE REMOVED BY SLOWLY PULLING TOWARD THE SHORE MINIMIZING THE ESCAPE OF SEDIMENTS INTO WATERWAY.

FILTER CURTAIN

THIS WORK SHALL BE PERFORMED IN ACCORDANCE WITH SECTION 649 FOR GEOTEXTILE FOR FILTER CURTAIN (PAY ITEM 649.61).

REVISIONS	
APRIL 1, 2008	WHF
JANUARY 13, 2009	WHF
SEPTEMBER 4, 2009	WHF

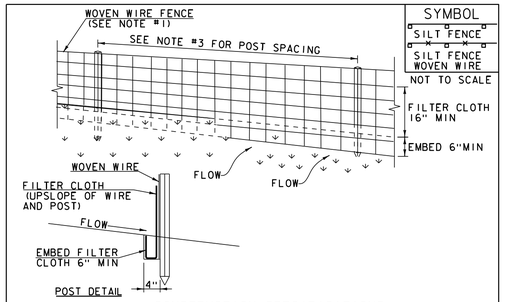

CONSTRUCTION SPECIFICATIONS

1. WOVEN WIRE REINFORCED FENCE IS REQUIRED WITHIN 100' UPSLOPE OF RECEIVING WATERS WHEN THE PROJECT FALLS UNDER A CONSTRUCTION STORMWATER PERMIT. WOVEN WIRE SHALL BE A MIN. 14 GAUGE WITH A 6" MAX. MESH OPENING.
2. FILTER CLOTH SHALL BE EITHER FILTER X, MIRAFI 1100X, STABILINKA T140N OR APPROVED EQUIVALENT.
3. POST SPACING FOR WIRE-BACKED FENCE SHALL BE 10' MAXIMUM. FOR FILTER-CLOTH FENCE, WHEN ELONGATION IS >50%, POST SPACING SHALL NOT EXCEED 4' AND WHEN ELONGATION IS <50%, POST SPACING SHALL NOT EXCEED 6'.
4. WOVEN WIRE FENCE IS TO BE FASTENED SECURELY TO FENCE POSTS WITH WIRE TIES. FILTER CLOTH IS TO BE FASTENED SECURELY TO WOVEN WIRE FENCE WITH TIES SPACED EVERY 24" AT TOP AND MID SECTION.
5. WHEN TWO SECTIONS OF FILTER CLOTH ADJOIN EACH OTHER THEY SHALL BE OVER-LAPPED BY 6" AND FOLDED.
6. MAINTENANCE SHALL BE PERFORMED AS NEEDED AND MATERIAL REMOVED WHEN SEDIMENT REACHES HALF OF FABRIC HEIGHT.

ADAPTED FROM DETAILS PROVIDED BY: NEW YORK STATE DEC
ORIGINALLY DEVELOPED BY USDA-NRCS
VERMONT DEPARTMENT OF ENVIRONMENTAL CONSERVATION

SILT FENCE

NOTES:
REFER TO "THE VERMONT STANDARDS & SPECIFICATIONS FOR EROSION PREVENTION & SEDIMENT CONTROL -2006- "FROM THE VT AGENCY OF NATURAL RESOURCES FOR ADDITIONAL GUIDANCE.

THIS WORK SHALL BE PERFORMED IN ACCORDANCE WITH SECTION 649 AND AS SHOWN IN THE PLANS FOR GEOTEXTILE FOR SILT FENCE (PAY ITEM 649.51) OR GEOTEXTILE FOR SILT FENCE, WOVEN WIRE REINFORCED (PAY ITEM 649.515).

REVISIONS	
MARCH 21, 2008	WHF
DECEMBER 11, 2008	WHF
JANUARY 13, 2009	WHF

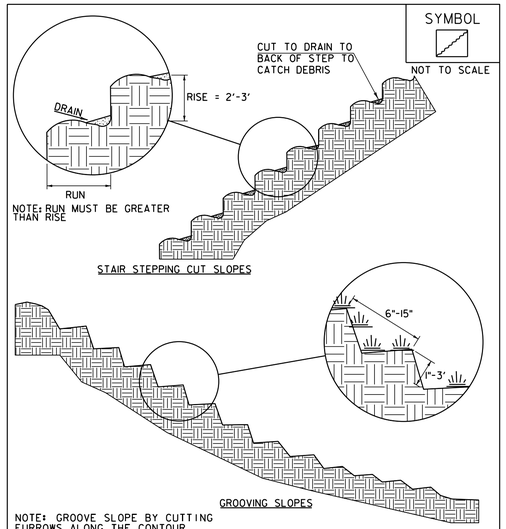

NOTE: GROOVE SLOPE BY CUTTING FURROWS ALONG THE CONTOUR. IRREGULARITIES IN THE SOIL SURFACE CATCH RAINWATER AND RETAIN LIME, FERTILIZER AND SEED.

ADAPTED FROM DETAILS PROVIDED BY: NEW YORK STATE DEC
ORIGINALLY DEVELOPED BY USDA-NRCS
VERMONT DEPARTMENT OF ENVIRONMENTAL CONSERVATION

SURFACE ROUGHENING

NOTES:
REFER TO "THE VERMONT STANDARDS & SPECIFICATIONS FOR EROSION PREVENTION & SEDIMENT CONTROL -2006- "FROM THE VT AGENCY OF NATURAL RESOURCES FOR ADDITIONAL GUIDANCE.

THIS WORK SHALL BE CONSIDERED INCIDENTAL TO THE CONTRACT

REVISIONS	
APRIL 1, 2008	WHF
JANUARY 13, 2009	WHF

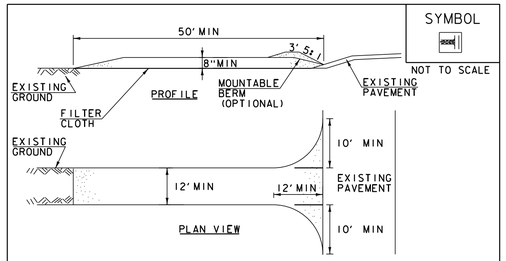

CONSTRUCTION SPECIFICATIONS

1. STONE SIZE- USE 1-4" STONE, RECLAIMED OR RECYCLED CONCRETE EQUIVALENT.
2. LENGTH- NOT LESS THAN 50' (EXCEPT ON A SINGLE RESIDENCE LOT WHERE A 30' MINIMUM LENGTH APPLIES).
3. THICKNESS- NOT LESS THAN 8".
4. WIDTH- 12' MINIMUM, BUT NOT LESS THAN THE FULL WIDTH AT POINTS WHERE INGRESS OR EGRESS OCCURS. 24' IF SINGLE ENTRANCE TO SITE.
5. GEOTEXTILE MUST BE PLACED OVER THE ENTIRE AREA PRIOR TO PLACING STONE.
6. SURFACE WATER- ALL SURFACE WATER FLOWING OR DIVERTED TOWARD CONSTRUCTION ENTRANCES SHALL BE PIPED BENEATH THE ENTRANCE. IF PIPING IS IMPRACTICAL, A MOUNTABLE BERM WITH 5:1 SLOPES WILL BE PERMITTED.
7. MAINTENANCE- THE ENTRANCE SHALL BE MAINTAINED IN A CONDITION WHICH WILL PREVENT TRACKING OR FLOWING OF SEDIMENT ONTO PUBLIC RIGHTS-OF-WAY, ALL SEDIMENT SPILLED, DROPPED, WASHED OR TRACKED ONTO PUBLIC RIGHTS-OF-WAY MUST BE REMOVED IMMEDIATELY.
8. WHEN WASHING IS REQUIRED, IT SHALL BE DONE ON AN AREA STABILIZED WITH STONE AND WHICH DRAINS INTO AN APPROVED SEDIMENT TRAPPING DEVICE.
9. PERIODIC INSPECTION AND NEEDED MAINTENANCE SHALL BE PROVIDED ACCORDING TO PERMIT REQUIREMENTS.

ADAPTED FROM DETAILS PROVIDED BY: NEW YORK STATE DEC
ORIGINALLY DEVELOPED BY USDA-NRCS
VERMONT DEPARTMENT OF ENVIRONMENTAL CONSERVATION

STABILIZED CONSTRUCTION ENTRANCE

NOTES:
REFER TO "THE VERMONT STANDARDS & SPECIFICATIONS FOR EROSION PREVENTION & SEDIMENT CONTROL -2006- "FROM THE VT AGENCY OF NATURAL RESOURCES FOR ADDITIONAL GUIDANCE.

THIS WORK SHALL BE PERFORMED IN ACCORDANCE WITH SECTION 653 FOR VEHICLE TRACKING PAD (PAY ITEM 653.35) OR AS SPECIFIED IN THE CONTRACT.

REVISIONS	
MARCH 24, 2008	WHF
JANUARY 13, 2009	WHF

VAOT RURAL AREA MIX

% WEIGHT	LBS/AC BROADCAST	LBS/AC HYDROSEED	NAME	GERM %	PURITY %
37.5%	22.5	45	CREEPING RED FESCUE	85%	98%
37.5%	22.5	45	TALL FESCUE	90%	95%
5.0%	3	6	RED TOP	90%	95%
15.0%	9	18	BIRDSFOOT TREFOIL	85%	98%
5.0%	3	6	ANNUAL RYE GRASS	85%	95%
100%	60	120			

VAOT URBAN AREA MIX

% WEIGHT	LBS/AC BROADCAST	LBS/AC HYDROSEED	NAME	GERM %	PURITY %
42.5%	34	68	CREEPING RED FESCUE	85%	98%
10.0%	8	16	PERENNIAL RYE GRASS	90%	95%
42.5%	34	68	KENTUCKY BLUE GRASS	85%	85%
5.0%	4	8	ANNUAL RYE GRASS	85%	95%
100%	80	160			

SOIL AMENDMENT GUIDANCE

FERTILIZER		LIME	
BROADCAST	HYDROSEED	BROADCAST	HYDROSEED
10-20-10	*FOLLOW*	PELLETIZED	*FOLLOW*
500 LBS/AC	*MANUFACTURER*	2 TONS/AC	*MANUFACTURER*

CONSTRUCTION GUIDANCE

1. RURAL SEED MIX: USE AS INDICATED IN THE PLANS AND/OR FOR ALL ESTABLISHED UPLAND (NON WETLAND) AREAS DISTURBED BY THE CONTRACTOR.
2. URBAN SEED MIX: USE AS INDICATED IN THE PLANS AND/OR FOR ALL ESTABLISHED LAWN AREAS DISTURBED BY THE CONTRACTOR.
3. ALL SEED MIXTURES: SHALL NOT HAVE A WEED CONTENT EXCEEDING 0.40% BY WEIGHT AND SHALL BE FREE OF ALL NOXIOUS SEED.
4. FERTILIZER AND LIMESTONE: SHALL FOLLOW RATES SHOWN ON PLAN OR AS DIRECTED BY THE ENGINEER
5. HAY MULCH: TO BE PLACED ON EARTH SLOPES AT THE RATE OF 2 TONS/ACRE, ACHIEVE 90% GROUND COVER OR AS DIRECTED BY THE ENGINEER.
6. TOPSOIL: TO BE USED WITH SEED AS INDICATED ON THE PLANS, OR AS DIRECTED BY THE ENGINEER.
7. HYDROSEEDING: ALTHOUGH GUIDANCE IS GIVEN ABOVE THE SITE CONDITIONS AND THE TYPE OF HYDROSEED WILL ULTIMATELY DICTATE THE AMOUNTS AND TYPES OF SOIL AMENDMENTS TO BE APPLIED
8. TURF ESTABLISHMENT: PLACING SEED, FERTILIZER, LIME AND MULCH PRIOR TO SEPTEMBER 15 AND AFTER APRIL 15 CAN BETTER ENSURE A VIGOROUS GROWTH OF GRASS.

ADAPTED FROM VTRANS TECHNICAL LANDSCAPE MANUAL FOR ROADWAYS AND TRANSPORTATION FACILITIES

TURF ESTABLISHMENT

THIS WORK SHALL BE PERFORMED IN ACCORDANCE WITH SECTION 651 FOR SEED (PAY ITEM 651.15)

REVISIONS	
JUNE 23, 2009	WHF
JANUARY 15, 2010	WHF
FEBRUARY 16, 2011	WHF

PROJECT NAME: FAIRFIELD
PROJECT NUMBER: BRO 1448(41)

FILE NAME: s12j170erodetails.dgn
PROJECT LEADER: R. YOUNG
DESIGNED BY: R. KLINEFELTER
EPSC DETAILS

PLOT DATE: 18-AUG-2014
DRAWN BY: K. FRIEDLAND
CHECKED BY: J. SALVATORI
SHEET 63 OF 69

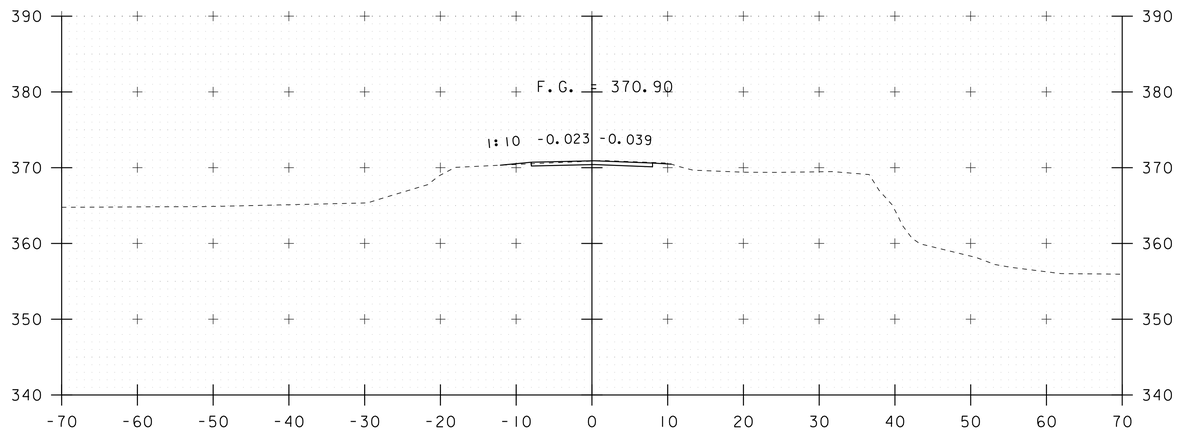

18+75

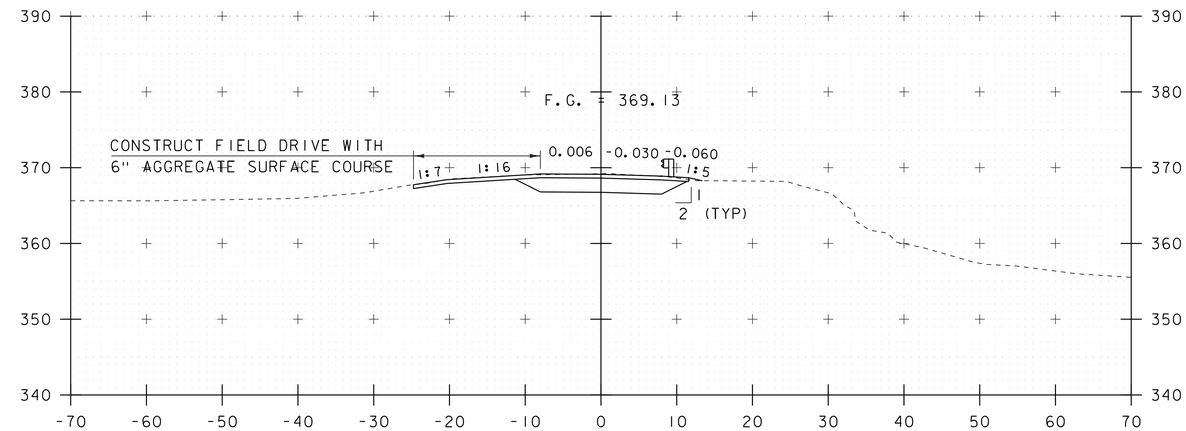

19+25

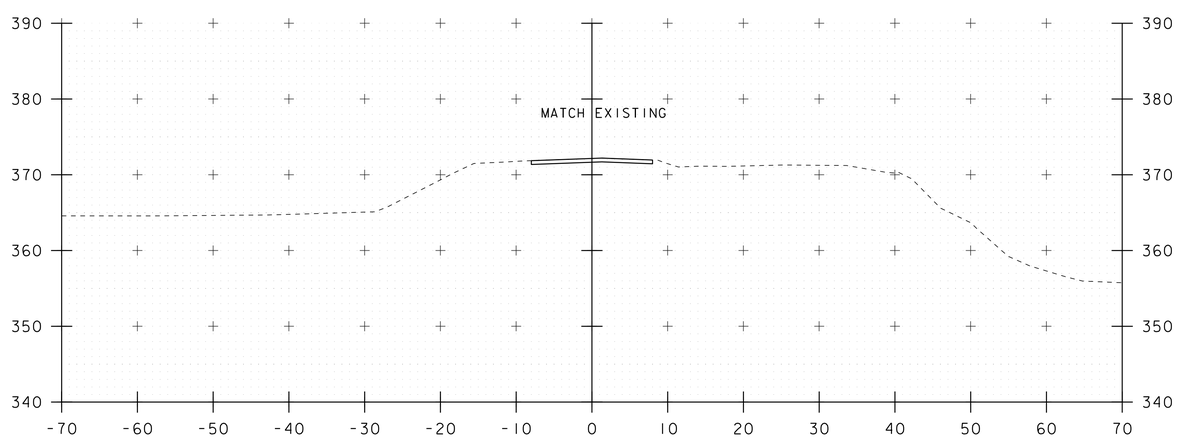

18+50
BEGIN APPROACH

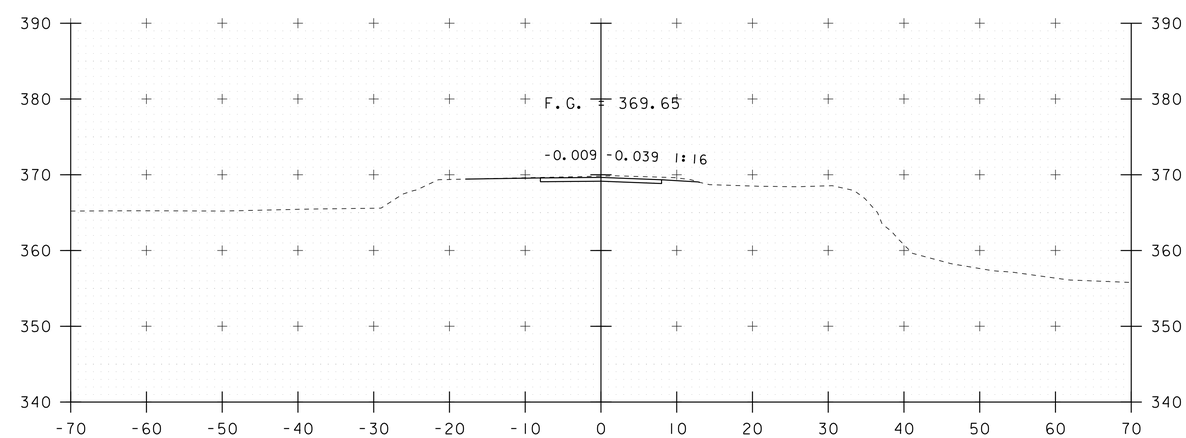

19+00

STA. 18+50 TO STA. 19+25

PROJECT NAME: FAIRFIELD	
PROJECT NUMBER: BRO 1448(41)	
FILE NAME: s12j170xs.dgn	PLOT DATE: 18-AUG-2014
PROJECT LEADER: R. YOUNG	DRAWN BY: K. FRIEDLAND
DESIGNED BY: R. KLINEFELTER	CHECKED BY: J. SALVATORI
MAINLINE SECTIONS	SHEET 64 OF 69

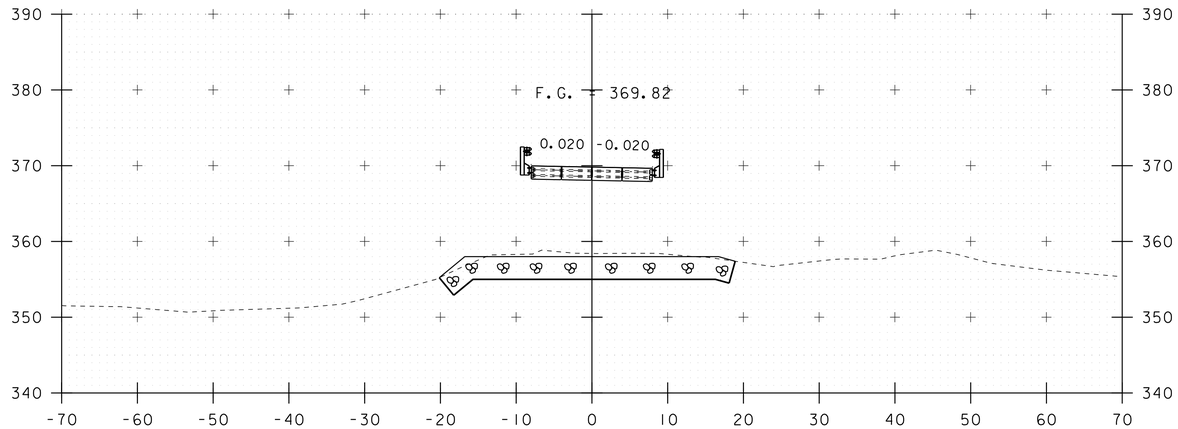

19+75

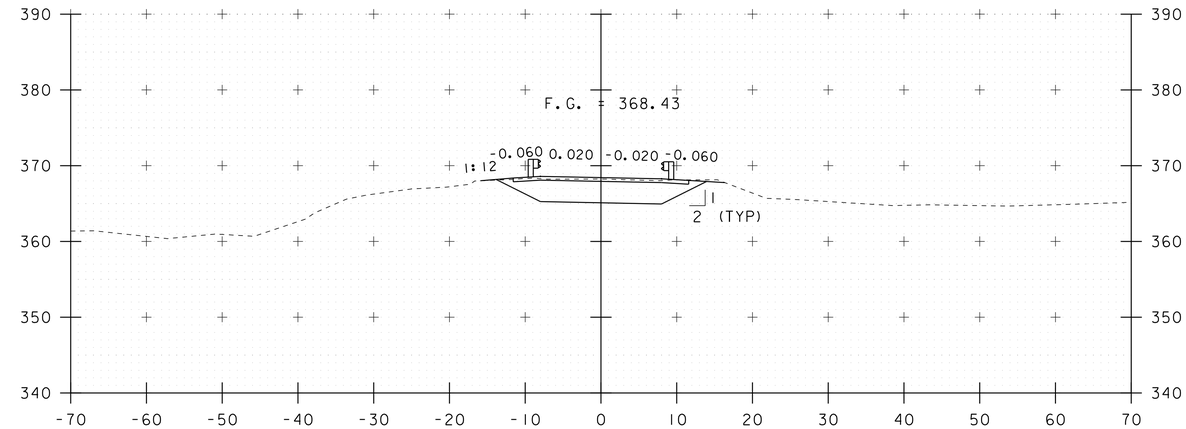

20+25
END PROJECT

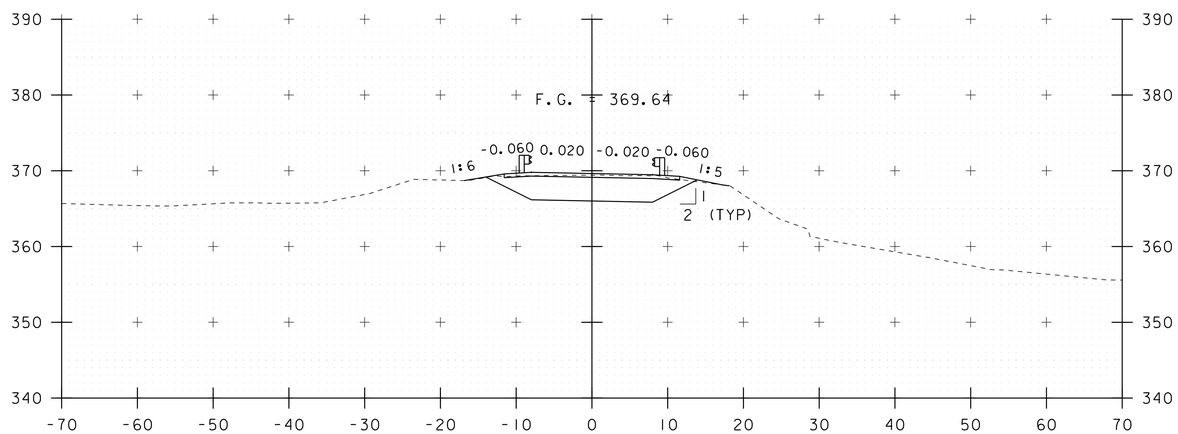

19+50
BEGIN PROJECT
BEGIN BRIDGE STA 19+57.50

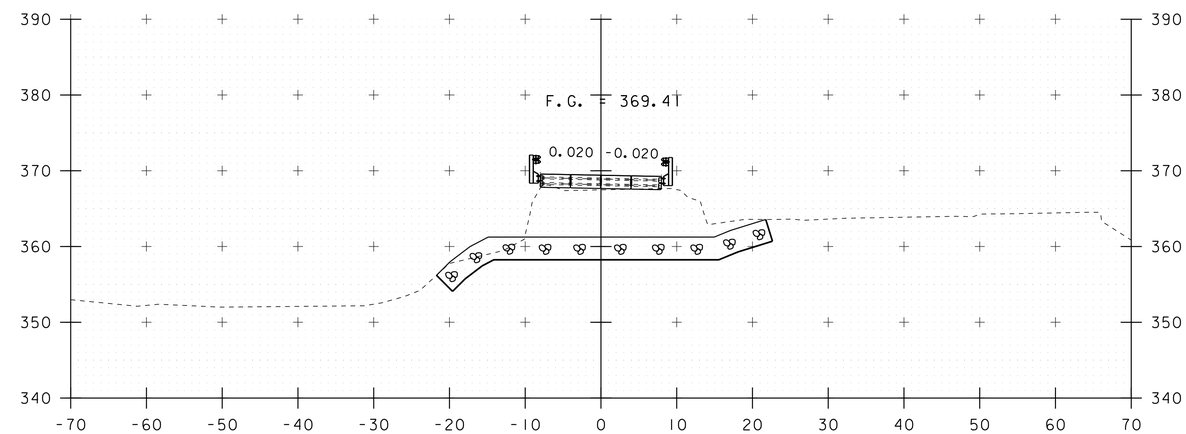

20+00
END BRIDGE STA 20+11.50

STA. 19+50 TO STA. 20+25

PROJECT NAME: FAIRFIELD	
PROJECT NUMBER: BRO 1448(41)	
FILE NAME: s12j170xs.dgn	PLOT DATE: 18-AUG-2014
PROJECT LEADER: R. YOUNG	DRAWN BY: K. FRIEDLAND
DESIGNED BY: R. KLINEFELTER	CHECKED BY: J. SALVATORI
MAINLINE SECTIONS	SHEET 65 OF 69

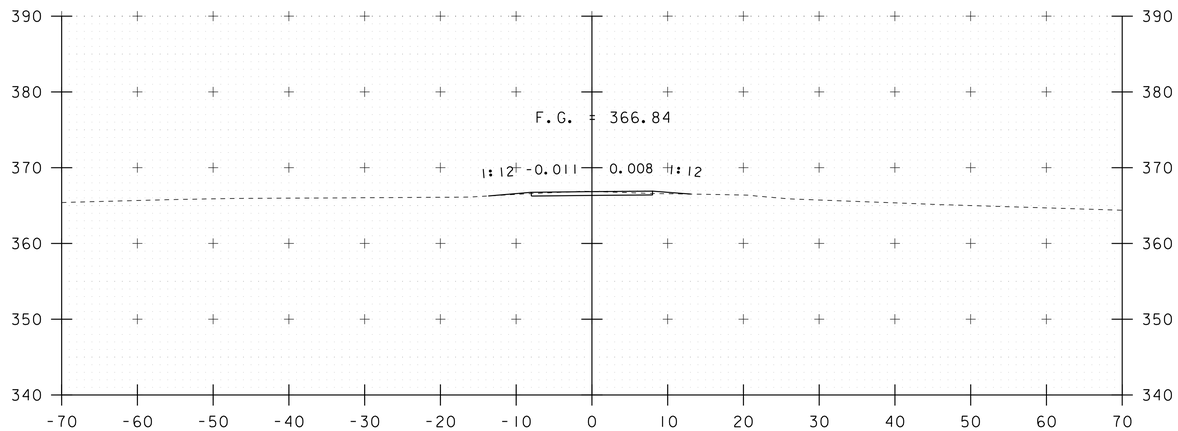

20+75

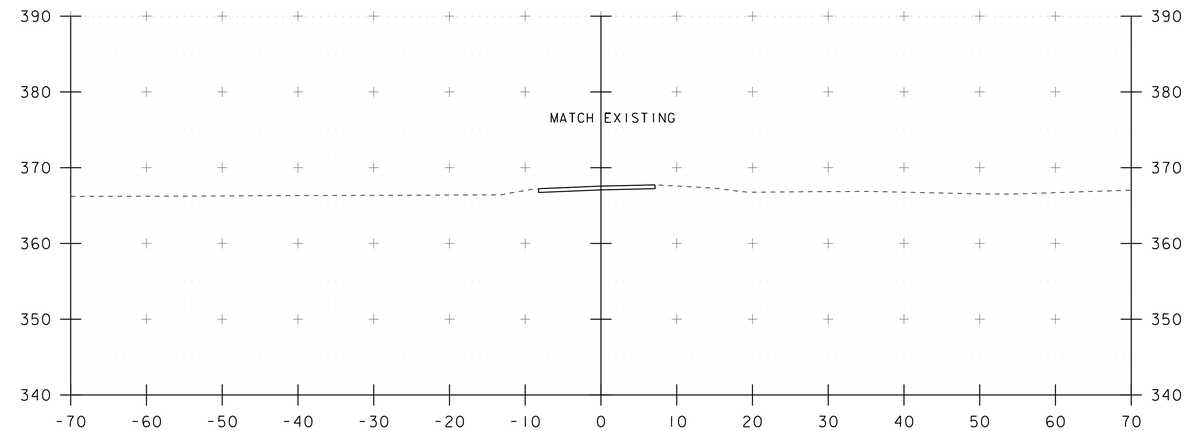

21+25
END APPROACH

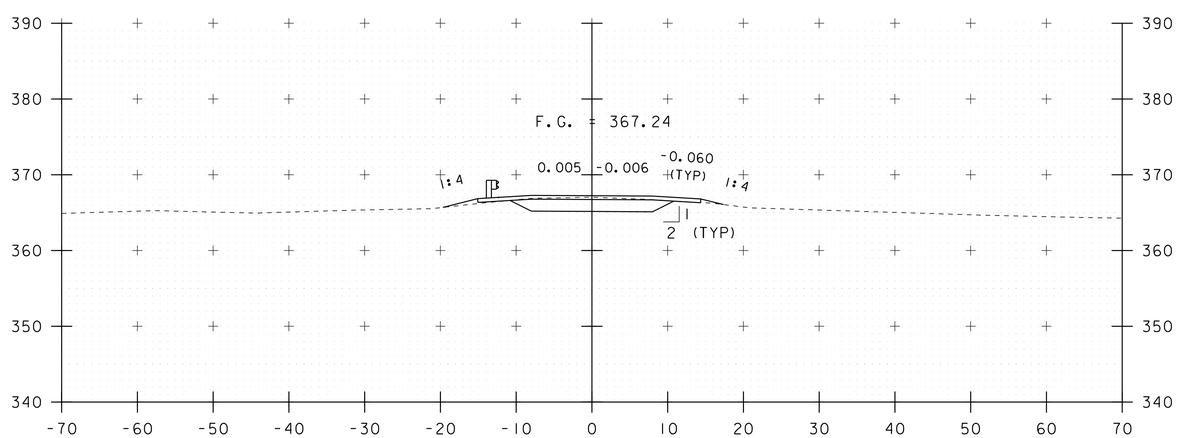

20+50

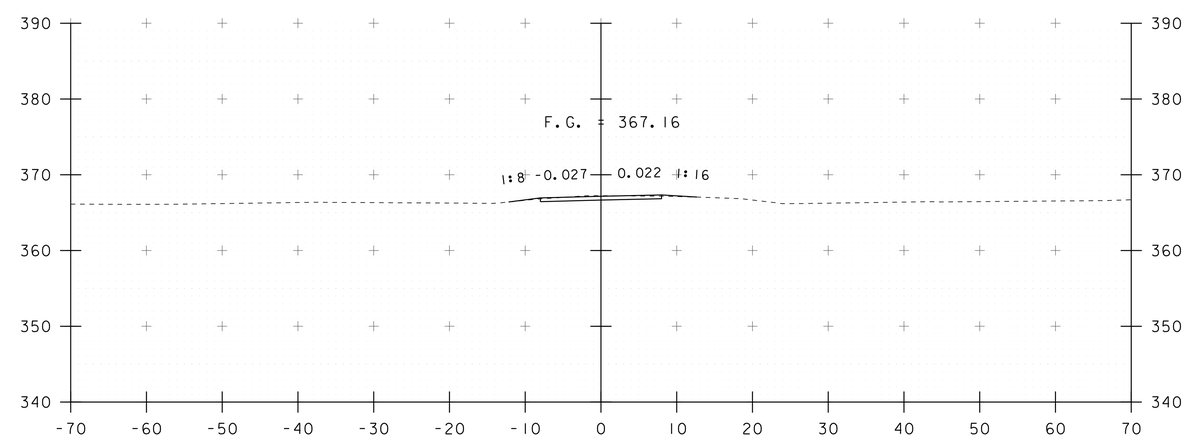

21+00

STA. 20+50 TO STA. 21+25

PROJECT NAME: FAIRFIELD	
PROJECT NUMBER: BRO 1448(41)	
FILE NAME: s12j170xs.dgn	PLOT DATE: 18-AUG-2014
PROJECT LEADER: R. YOUNG	DRAWN BY: K. FRIEDLAND
DESIGNED BY: R. KLINEFELTER	CHECKED BY: J. SALVATORI
MAINLINE SECTIONS	SHEET 66 OF 69

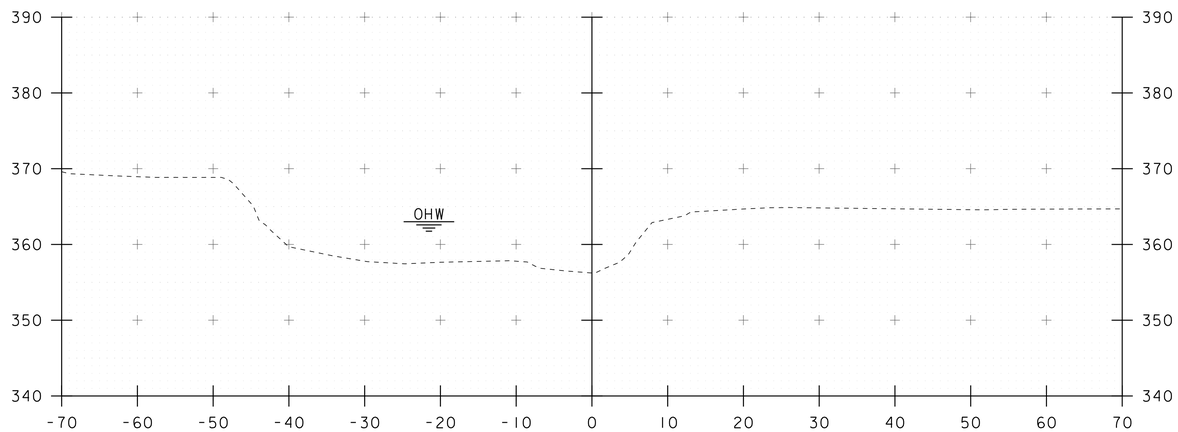

50+25

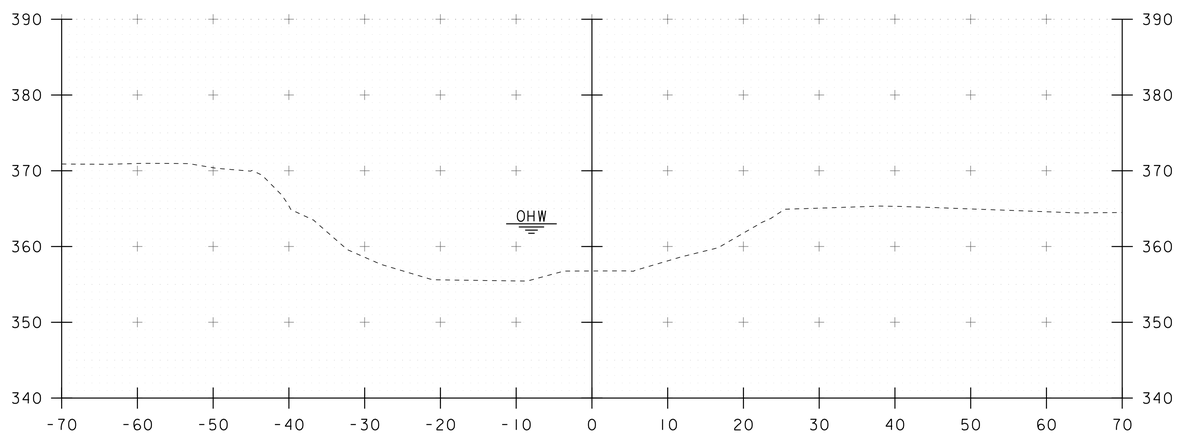

50+00

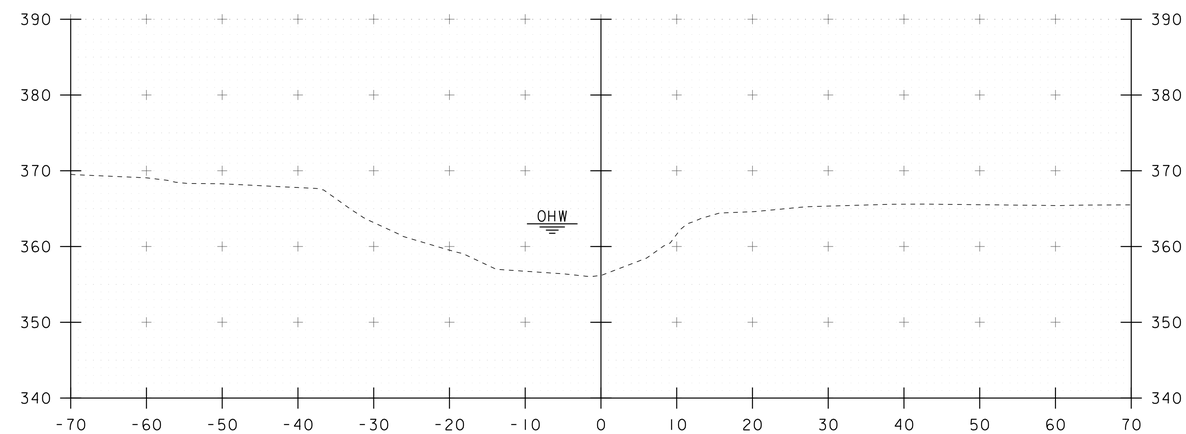

50+50

STA 50+53.00 LT AND RT
BEGIN STONE FILL, TYPE III
GEOTEXTILE UNDER STONE FILL
GRUBBING MATERIAL
UNCLASSIFIED CHANNEL EXCAVATION

STA. 50+00 TO STA. 50+50

PROJECT NAME: FAIRFIELD	
PROJECT NUMBER: BRO 1448(41)	
FILE NAME: s12j170xs.dgn	PLOT DATE: 18-AUG-2014
PROJECT LEADER: R. YOUNG	DRAWN BY: K. FRIEDLAND
DESIGNED BY: R. KLINEFELTER	CHECKED BY: J. SALVATORI
CHANNEL SECTIONS	SHEET 67 OF 69

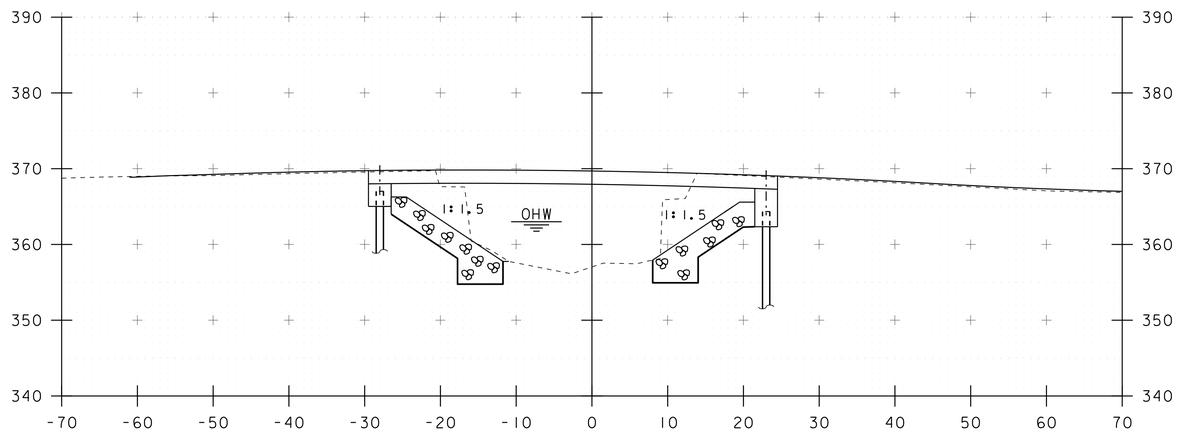

50+75

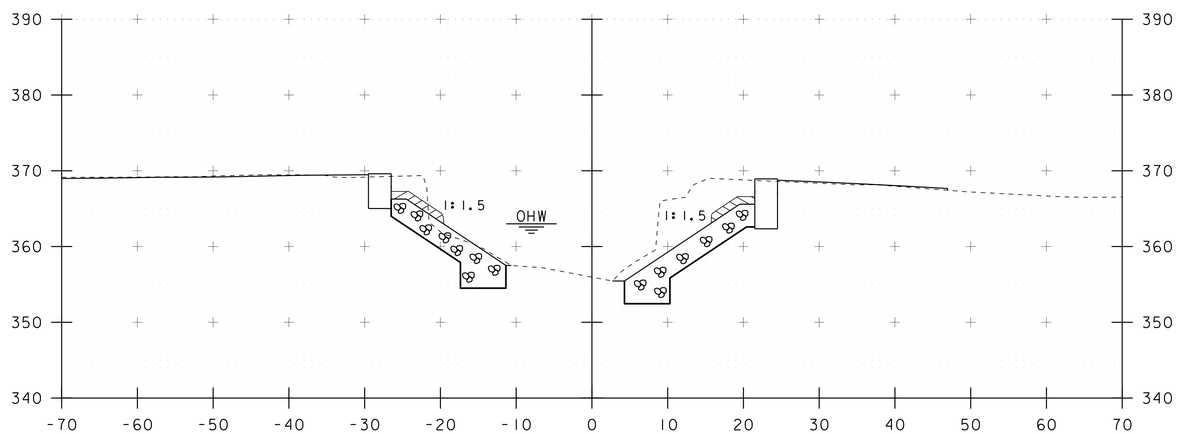

STA 50+67.00 LT AND RT
END GRUBBING MATERIAL

50+65

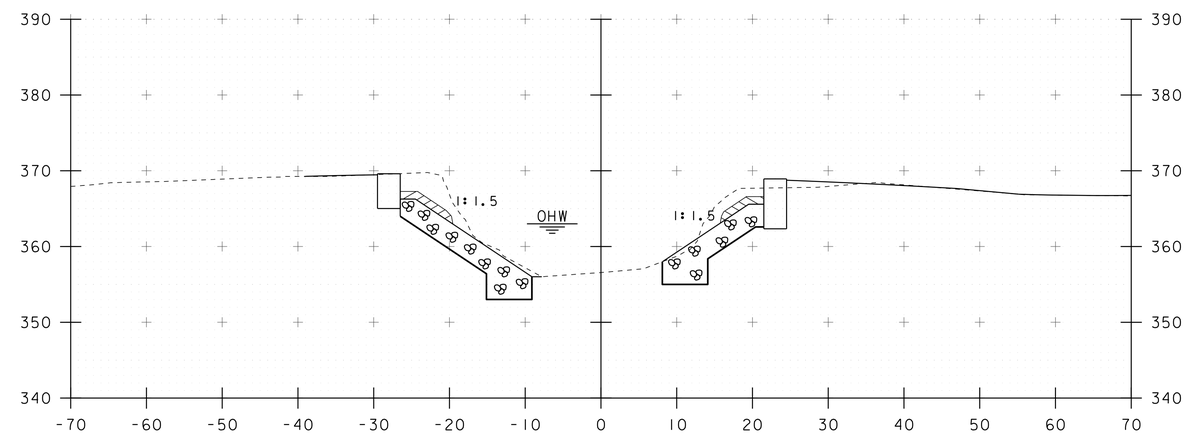

STA 50+83.00 LT AND RT
BEGIN GRUBBING MATERIAL

50+85

STA. 50+65 TO STA. 50+85

PROJECT NAME: FAIRFIELD	
PROJECT NUMBER: BRO 1448(41)	
FILE NAME: s12j170xs.dgn	PLOT DATE: 18-AUG-2014
PROJECT LEADER: R. YOUNG	DRAWN BY: K. FRIEDLAND
DESIGNED BY: R. KLINEFELTER	CHECKED BY: J. SALVATORI
CHANNEL SECTIONS	SHEET 68 OF 69

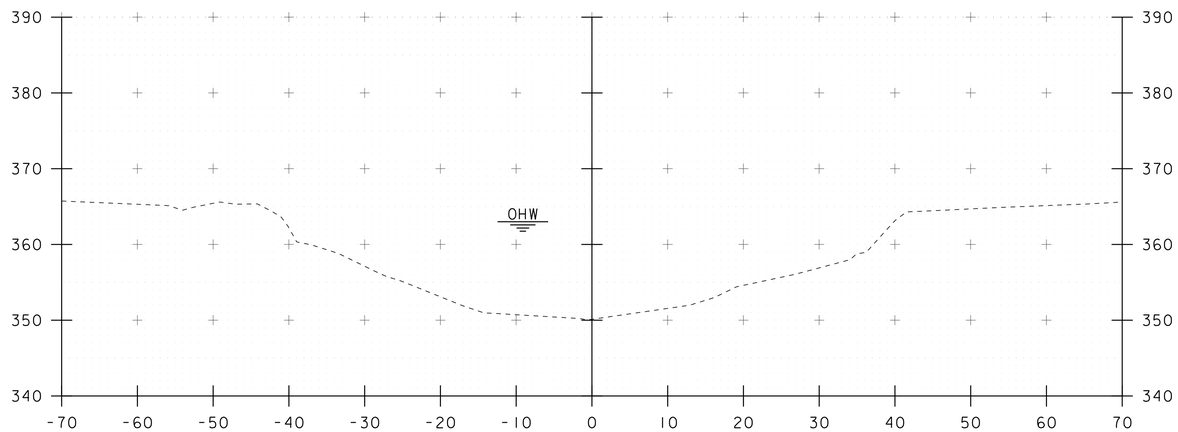

51+25

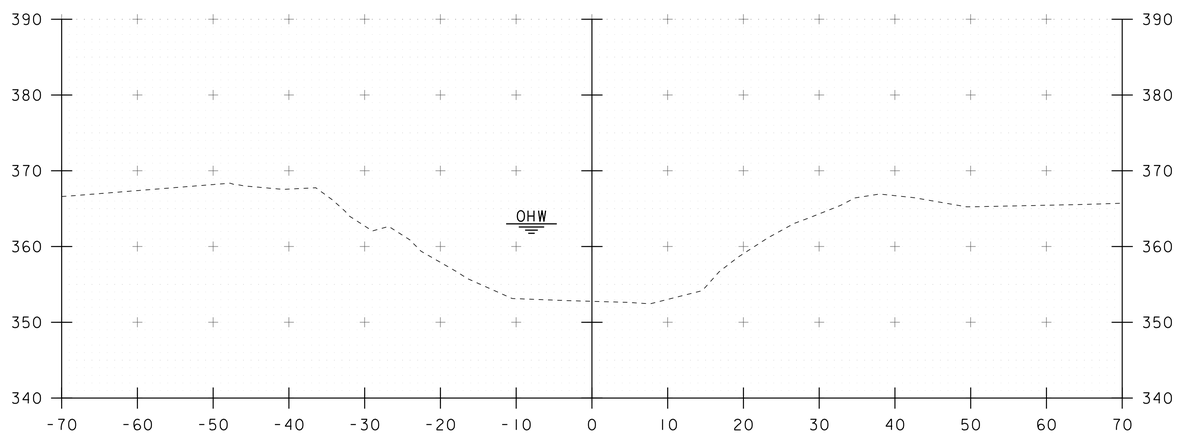

STA 50+97.00 LT AND RT
END STONE FILL, TYPE III
GEOTEXTILE UNDER STONE FILL
GRUBBING MATERIAL
UNCLASSIFIED CHANNEL EXCAVATION

51+00

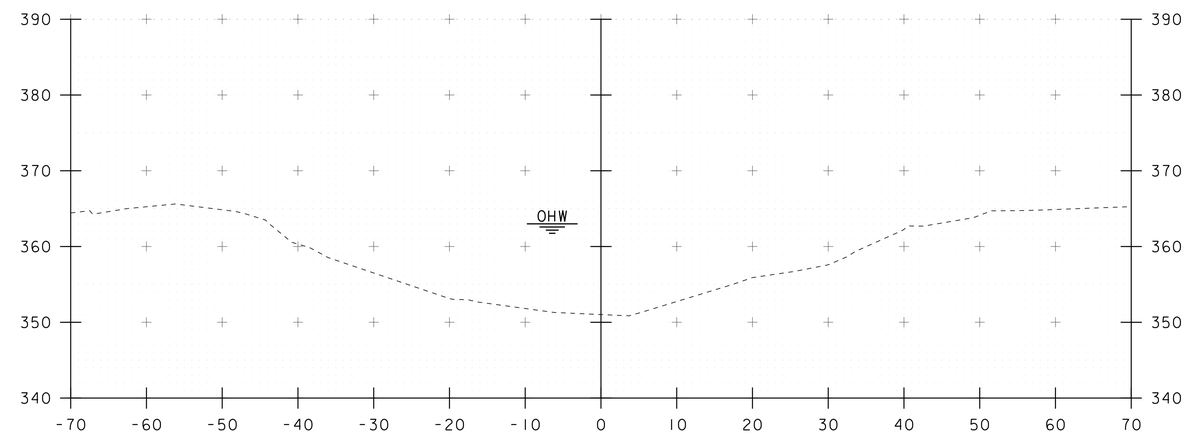

51+50

STA. 51+00 TO STA. 51+50

PROJECT NAME: FAIRFIELD	
PROJECT NUMBER: BRO 1448(41)	
FILE NAME: s12j170xs.dgn	PLOT DATE: 18-AUG-2014
PROJECT LEADER: R. YOUNG	DRAWN BY: K. FRIEDLAND
DESIGNED BY: R. KLINEFELTER	CHECKED BY: J. SALVATORI
CHANNEL SECTIONS	SHEET 69 OF 69

CONCRETE GENERAL NOTES

1. ALL EXPOSED EDGES OF CONCRETE SHALL BE CHAMFERED 1" x 1"
2. REINFORCING STEEL SIZE AND SPACING SHOWN IN THE PLANS IS BASED ON 60 KSI STEEL, UNLESS NOTED OTHERWISE. WITH THE ENGINEER'S PERMISSION, BAR SIZE AND SPACING MAY BE MODIFIED ACCORDING TO THE LATEST AASHTO LRFD BRIDGE DESIGN SPECIFICATION AND STRUCTURES DESIGN MANUAL WHEN USING HIGHER STRENGTH STEEL.

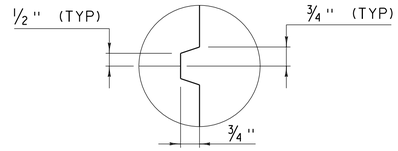

SCORE MARK DETAIL
(NOT TO SCALE)

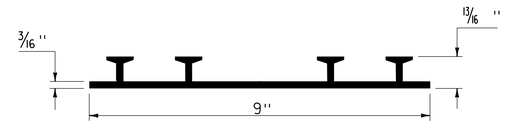

P.V.C. WATERSTOP FOR CONSTRUCTION JOINTS
(NOT TO SCALE)

PAYMENT FOR THE P.V.C. WATERSTOP SHALL BE INCIDENTAL TO THE UNIT BID PRICE FOR THE ADJACENT CONCRETE.

OTHER CONFIGURATIONS OF WATERSTOP MAY BE USED UPON APPROVAL OF THE ENGINEER.

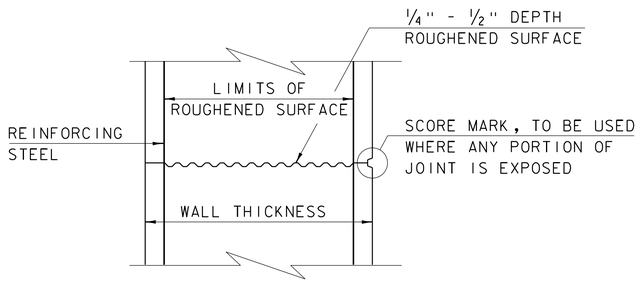

TYPICAL HORIZONTAL CONSTRUCTION JOINT
(NOT TO SCALE)

1. THE SURFACE OF THE CONCRETE CONSTRUCTION JOINTS SHALL BE CLEANED AND FREE OF LAITANCE.
2. IMMEDIATELY BEFORE NEW CONCRETE IS PLACED, ALL CONSTRUCTION JOINTS SHALL BE WETTED AND STANDING WATER REMOVED.

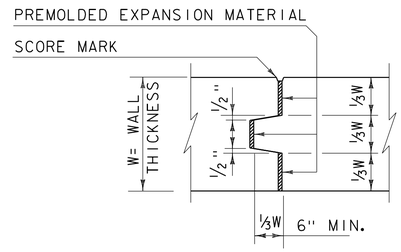

TYPICAL CONCRETE EXPANSION JOINT
(NOT TO SCALE)

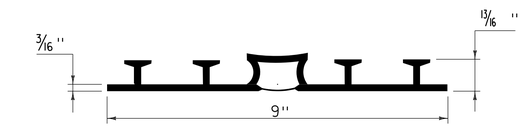

P.V.C. WATERSTOP FOR EXPANSION JOINTS
(NOT TO SCALE)

PAYMENT FOR THE P.V.C. WATERSTOP SHALL BE INCIDENTAL TO THE UNIT BID PRICE FOR THE ADJACENT CONCRETE.

OTHER CONFIGURATIONS OF WATERSTOP MAY BE USED UPON APPROVAL OF THE ENGINEER.

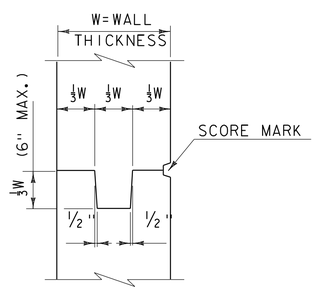

TYPICAL CONCRETE CONSTRUCTION JOINT
(NOT TO SCALE)

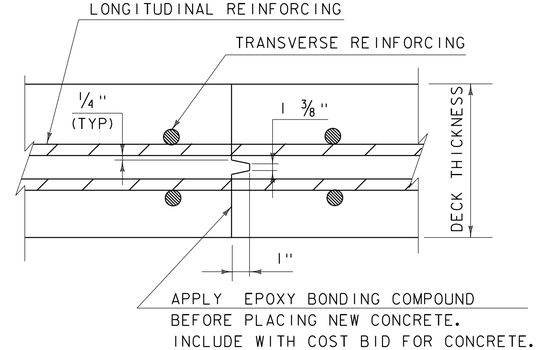

TRANSVERSE BRIDGE SLAB CONSTRUCTION JOINT DETAILS
(NOT TO SCALE)

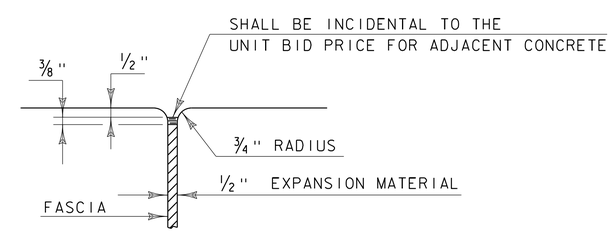

JOINT BETWEEN FASCIA AND WINGWALL
(NOT TO SCALE)

REVISIONS	
MAY 7, 2010	APPROVED FOR USE BY VAOT STRUCTURES SECTION
FEBRUARY 9, 2012	REBAR SUBSTITUTION ALLOWANCE ADDED TO CONCRETE GENERAL NOTES.

CONCRETE DETAILS AND NOTES

VERMONT AGENCY OF TRANSPORTATION
STRUCTURES SECTION

STRUCTURES DETAIL
SD-501.00

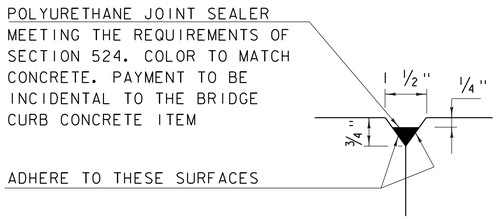

DETAIL "B"
(NOT TO SCALE)

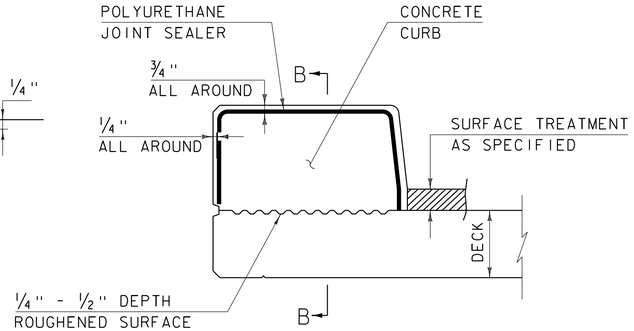

CONCRETE CURB JOINT SECTION
(NOT TO SCALE)

1. SEE TYPICAL HORIZONTAL CONSTRUCTION JOINT DETAIL FOR ADDITIONAL INFORMATION

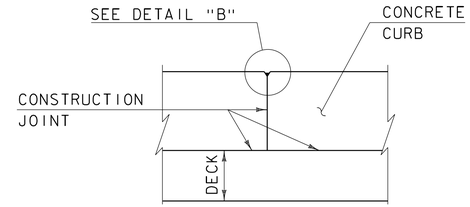

SECTION B - B
(NOT TO SCALE)

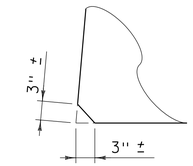

ACUTE ANGLE CLIP DETAIL
(NOT TO SCALE)

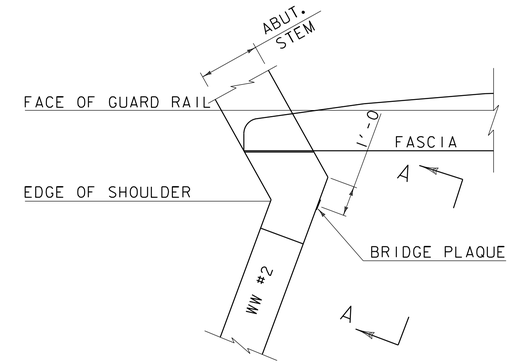

PLAN

CONCRETE CURB JOINT NOTES

1. CONCRETE CURBS MAY BE PLACED IN ONE CONTINUOUS OPERATION IF AN APPROVED SHRINKAGE REDUCING ADMIXTURE LISTED IN THE SPECIAL PROVISIONS IS USED WITH THE CONCRETE MIX DESIGN. PAYMENT FOR THE SHRINKAGE REDUCING ADMIXTURE WILL BE INCIDENTAL TO THE BRIDGE CURB CONCRETE ITEM.

2. IF THE CONTRACTOR CHOOSES NOT TO USE AN APPROVED SHRINKAGE REDUCING ADMIXTURE, THE CURBS SHALL BE CONSTRUCTED WITH CONSTRUCTION JOINTS SPACED AT A MAXIMUM OF 15'-0" CENTER TO CENTER AND 2'-0" MINIMUM FROM THE CENTER OF NEAREST BRIDGE RAILING POST.

3. ON MULTI-SPAN CONTINUOUS SUPERSTRUCTURES, REGARDLESS OF WHETHER APPROVED SHRINKAGE REDUCING ADMIXTURE IS USED, CURB JOINTS SHALL BE LOCATED OVER THE CENTERLINE OF PIERS AND 7'-0" EACH SIDE OF THE CENTERLINE OF EACH PIER.

4. WHEN CURB JOINTS ARE USED THE CURBS SHALL BE PLACED IN ALTERNATE SECTIONS WITH A MINIMUM OF 48 HOUR DELAY BETWEEN ADJACENT PLACEMENTS.

5. LONGITUDINAL REINFORCING SHALL BE CONTINUOUS THROUGH CURB CONSTRUCTION JOINTS. CURB STIRRUP BARS SHALL BE TURNED AS NECESSARY TO MAINTAIN COVER IN THE FLARED CURB ENDS.

6. THE JOINT SPACING AND DETAILS SHOWN SHALL APPLY TO SIDEWALKS WHEN SHOWN IN THE PLANS.

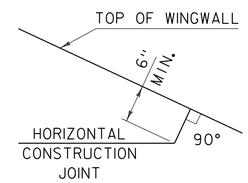

HORIZONTAL WINGWALL CONSTRUCTION JOINT
(NOT TO SCALE)

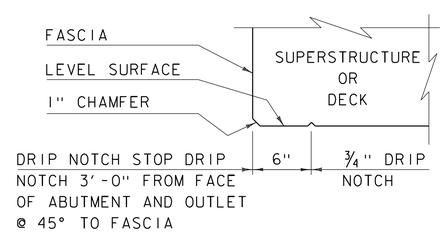

DRIP NOTCH DETAIL
(NOT TO SCALE)

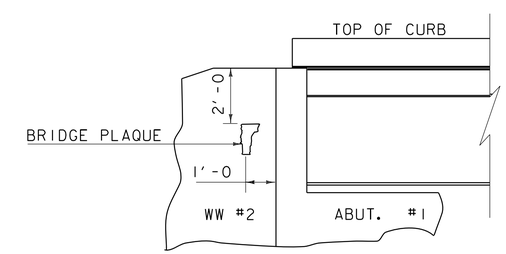

VIEW "A - A"

BRIDGE PLAQUE
(NOT TO SCALE)

THE BRIDGE PLAQUE WILL BE SUPPLIED BY THE AGENCY OF TRANSPORTATION AND SHALL BE INSTALLED BY THE CONTRACTOR AT ABUTMENT #1 ON THE RIGHT SIDE AS SHOWN OR AS DIRECTED BY THE ENGINEER.

PAYMENT FOR INSTALLATION OF THE BRIDGE PLAQUE SHALL BE INCIDENTAL TO THE ADJACENT CONCRETE.

REVISIONS

MAY 7, 2010	APPROVED FOR USE BY VAOT STRUCTURES SECTION
JUNE 4, 2010	MODIFIED AND ADDED TWO DETAILS
OCTOBER 10, 2012	MODIFIED HORZ. JOINT WINGWALL ADD 6" MIN. DIMENSION

CONCRETE DETAILS AND NOTES

VERMONT AGENCY OF TRANSPORTATION
STRUCTURES - SECTION

STRUCTURES DETAIL
SD-502.00

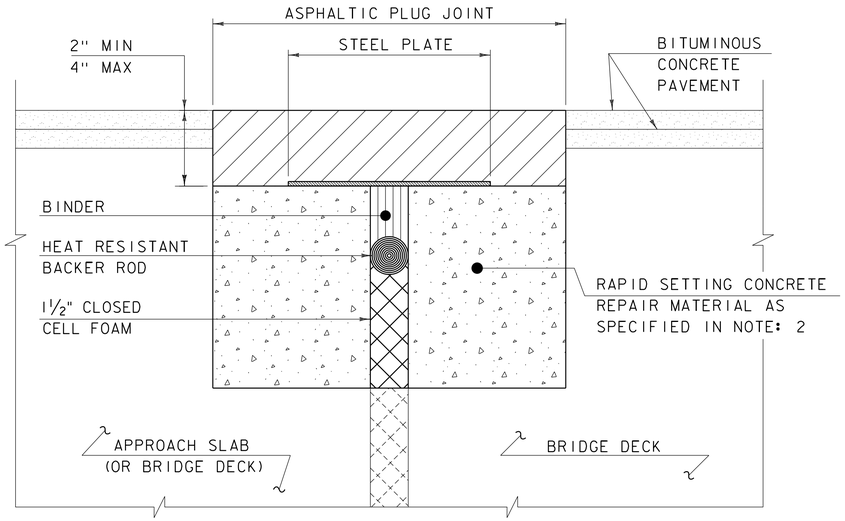

ASPHALTIC PLUG JOINT DETAIL - REHAB

NOTES:

1. THE CONTRACTOR SHALL REMOVE ALL ASPHALTIC PLUG JOINT MATERIAL AND DETERIORATED CONCRETE AS DIRECTED BY THE ENGINEER. REMOVAL OF THE FIRST 4 INCHES OF MATERIAL SHALL BE INCLUDED IN THE BID PRICE FOR ITEM 516.10 BRIDGE EXPANSION JOINT, ASPHALTIC PLUG. ANY REMOVAL OF MATERIAL GREATER THAN 4 INCHES SHALL BE INCLUDED IN THE BID PRICE OF ITEM 580.20 RAPID SETTING CONCRETE REPAIR MATERIAL WITH COARSE AGGREGATE.

2. THE CONTRACTOR SHALL REPLACE REMOVED MATERIAL THAT IS LESS THAN 4" FROM FINISHED GRADE WITH ASPHALTIC PLUG JOINT MATERIAL MEETING THE REQUIREMENTS OF SUBSECTION 707.15. ALL REMOVED MATERIAL THAT IS GREATER THAN 4 INCHES FROM FINISHED GRADE SHALL BE REPLACED WITH RAPID SETTING CONCRETE REPAIR MATERIAL WITH COARSE AGGREGATE MEETING THE REQUIREMENTS OF SUBSECTION 780.04.

3. REINFORCING STEEL NOT SHOWN FOR CLARITY.

4. PLACE 1/4" THICK BY 8" WIDE SECTIONS OF STEEL PLATE OVER THE CENTER OF THE MOVEMENT GAP. SECURE THE PLATES FROM MOVING BY INSERTING LOCATING PINS THROUGH THE PRE-STAMPED HOLES INTO BACKER ROD AND COVER WITH HOT BINDER. THE STEEL PLATES MAY BE OMITTED WHERE THE ENGINEER DETERMINES THAT THE APPROACH SLAB OR BRIDGE DECK WILL PROVIDE INADEQUATE SUPPORT AND WHERE VERTICAL MOVEMENT OF THE PLATES MIGHT OCCUR.

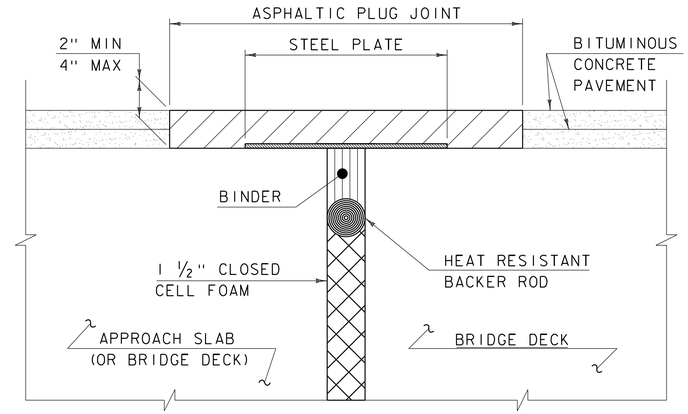

ASPHALTIC PLUG JOINT DETAIL "A" - NEW

NOTE:
PLACE 1/4" THICK BY 8" WIDE SECTIONS OF STEEL PLATE OVER THE CENTER OF THE MOVEMENT GAP. SECURE THE PLATES FROM MOVING BY INSERTING LOCATING PINS THROUGH THE PRE-STAMPED HOLES INTO BACKER ROD AND COVER WITH HOT BINDER.

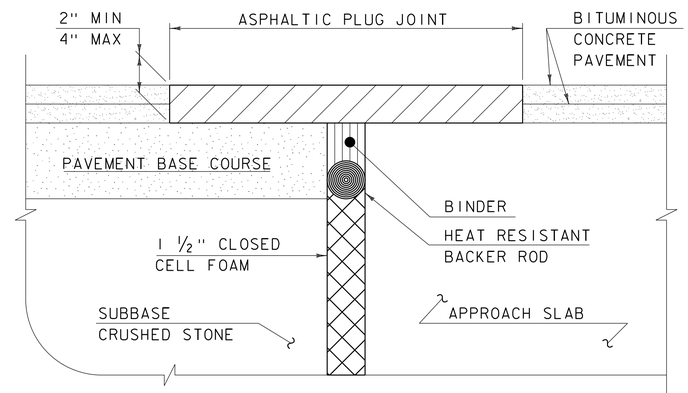

ASPHALTIC PLUG JOINT DETAIL "B" - NEW

ASPHALTIC PLUG JOINT NOTES

INSTALLATION:

1. LOCATE THE JOINT CENTRALLY OVER THE DECK OVERLAY EXPANSION GAP OR FIXED JOINT, MARKED OUT TO THE MANUFACTURER'S RECOMMENDED WIDTH.

2. REMOVE THE BITUMINOUS CONCRETE PAVEMENT FULL DEPTH AS SHOWN ON THE PLANS. THE PAVEMENT SHALL BE DRY AND SAW CUT TO THE LIMITS REQUIRED TO PLACE THE JOINT. A PNEUMATIC HAMMER AND CHISEL MAY BE USED ADJACENT TO THE CURB ONLY WHEN SAW CUTTING IS NOT POSSIBLE.

3. BLAST CLEAN THE JOINT AREA OF DEBRIS, ASPHALT AND SHEET MEMBRANE. THOROUGHLY DRY THE JOINT AREA WITH COMPRESSED AIR PRIOR TO APPLYING BINDER MATERIAL.

4. PLACE PROPERLY SIZED HEAT RESISTANT BACKER ROD IN THE MOVEMENT GAP ALLOWING FOR 1" +/- OF BINDER ABOVE THE ROD.

5. HEAT AND PLACE THE BINDER MATERIAL AS RECOMMENDED BY THE MANUFACTURER.

6. IMMEDIATELY AFTER TOP COATING, CAST AN ANTI-SKID MATERIAL OVER THE JOINT TO REDUCE THE RISK OF TRACKING.

WEATHER LIMITATIONS

APPLY BINDER MATERIAL ONLY WHEN THE FOLLOWING CONDITIONS PREVAIL OR AS RECOMMENDED BY THE MANUFACTURER:

1. THE AMBIENT AIR TEMPERATURE IS AT LEAST 10 DEG C (50 DEG F) AND RISING.

2. THE ROAD SURFACE IS DRY.

3. WEATHER CONDITIONS OR OTHER CONDITIONS ARE FAVORABLE AND ARE EXPECTED TO REMAIN SO FOR THE PERFORMANCE OF SATISFACTORY WORK.

DETAILS ON THIS SHEET ARE NOT TO SCALE.

REVISIONS	
MAY 7, 2010	APPROVED FOR USE BY VAOT STRUCTURES SECTION
AUGUST 29, 2011	ADD DETAIL "B" AND REV. NOTES

BRIDGE JOINT
ASPHALTIC PLUG

VERMONT AGENCY OF TRANSPORTATION
STRUCTURES - DIVISION

STRUCTURES DETAIL

SD-516.10

STRUCTURAL STEEL GENERAL NOTES:

1. ALL FIELD CONNECTIONS SHALL BE MADE WITH 7/8" DIAMETER HIGH-STRENGTH BOLTS IN 15/16" DIAMETER HOLES, PER SUBSECTION 506.19, UNLESS OTHERWISE SPECIFIED.
2. ALL HOLES IN THE WEBS OF THE FASCIA GIRDERS THAT ARE NOT OTHERWISE FILLED, SHALL BE FILLED WITH EITHER BUTTON HEAD OR HEX HEAD BOLTS. THESE BOLTS SHALL BE TIGHTENED IN ACCORDANCE WITH SUBSECTION 506.19.
3. ALL WELDING SHALL CONFORM TO THE PROVISIONS OF SUBSECTION 506.10.
4. ANY CONNECTIONS THAT ARE NOT DETAILED ON THE PLANS SHALL BE DETAILED BY THE FABRICATOR AND SUBMITTED TO THE STRUCTURES ENGINEER FOR APPROVAL.
5. STRUCTURAL STEEL MEMBERS DESIGNATED "CVN" IN THE PLANS SHALL BE CHARPY V-NOTCH TESTED IN ACCORDANCE WITH SUBSECTION 714.01 OF THE STANDARD SPECIFICATIONS.
6. ENDS OF GIRDERS ARE TO BE VERTICAL IN THEIR FINAL POSITION.
7. AFTER SUPERSTRUCTURE STEEL HAS BEEN ERECTED, ELEVATIONS ALONG THE TOP OF THE GIRDERS SHALL BE TAKEN AS DIRECTED BY THE RESIDENT ENGINEER FOR USE IN DETERMINING FINISHED GRADES.

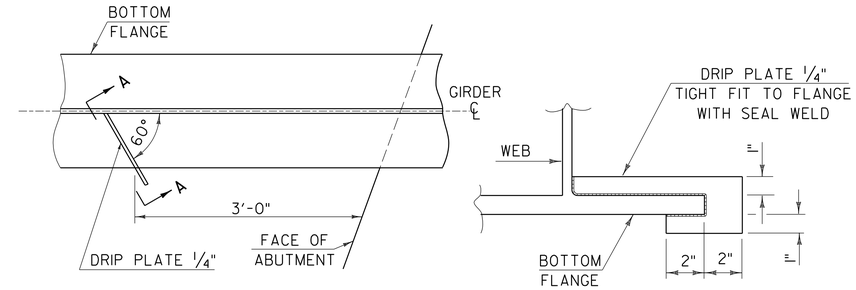

PLAN DRIP PLATE

SECTION A - A

NOTE: DRIP PLATES SHALL BE PLACED ON OUTSIDE EDGE OF FASCIA GIRDERS ON THE HIGH SIDE OF ALL PIERS AND ABUTMENTS OR AS INDICATED ON PROJECT PLANS.

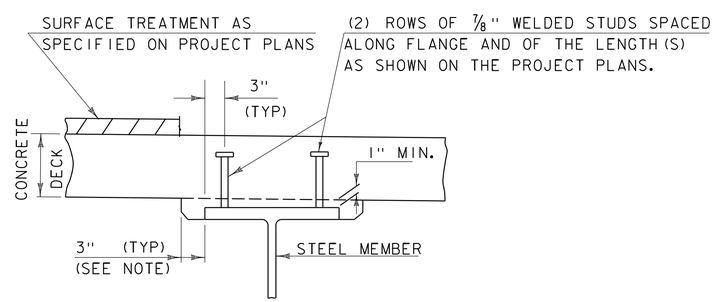

NOTE:
THE 3" HORIZONTAL SECTION MAY BE ELIMINATED FOR FORMING SYSTEMS DESIGNED FOR THE CONSTRUCTION OF VERTICAL HAUNCHES. ANY VOIDS RESULTING FROM FORMING SYSTEM ELEMENTS SHALL BE FILLED WITH JOINT SEALER, POLYURETHANE MEETING THE REQUIREMENTS OF SECTION 524. THE COST OF THE JOINT SEALER, POLYURETHANE SHALL BE INCIDENTAL TO THE ADJACENT CONCRETE.

HAUNCH AND SHEAR CONNECTOR DETAIL

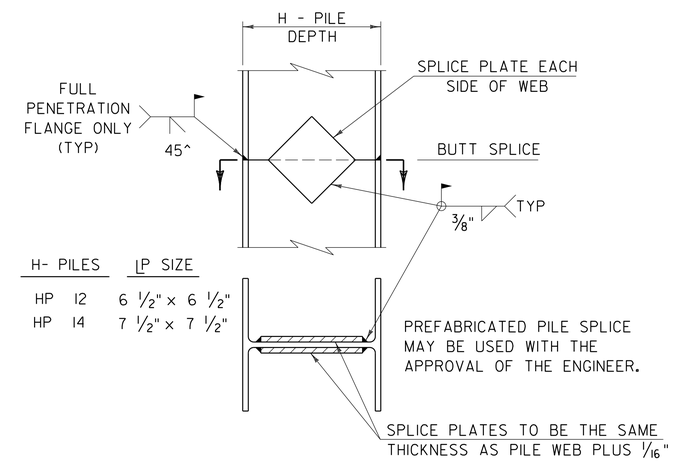

DETAIL OF PILE SPLICE

DETAILS ON THIS SHEET ARE "NOT TO SCALE" UNLESS NOTED OTHERWISE.

REVISIONS	
MAY 7, 2010	APPROVED FOR USE BY VAOT STRUCTURES SECTION
JUNE 4, 2010	MODIFIED NOTES

STRUCTURAL STEEL DETAILS & NOTES

VERMONT AGENCY OF TRANSPORTATION
STRUCTURES - SECTION

STRUCTURES DETAIL

SD-601.00